BNL-98585-2011-IR

Long-Baseline Neutrino Experiment (LBNE)

Water Cherenkov Detector

Basis of Estimate Forms and Backup Documentation

LBNE Far Site Internal Review

Diwan, M. et al

December 9, 2011

Physics Department
Electronic Detector Group

Brookhaven National Laboratory

U.S. Department of Energy
DOE Office of Science

Notice: This manuscript has been authored by employees of Brookhaven Science Associates, LLC under Contract No. DE-AC02-98CH10886 with the U.S. Department of Energy. The publisher by accepting the manuscript for publication acknowledges that the United States Government retains a non-exclusive, paid-up, irrevocable, world-wide license to publish or reproduce the published form of this manuscript, or allow others to do so, for United States Government purposes.

DISCLAIMER

This report was prepared as an account of work sponsored by an agency of the United States Government. Neither the United States Government nor any agency thereof, nor any of their employees, nor any of their contractors, subcontractors, or their employees, makes any warranty, express or implied, or assumes any legal liability or responsibility for the accuracy, completeness, or any third party's use or the results of such use of any information, apparatus, product, or process disclosed, or represents that its use would not infringe privately owned rights. Reference herein to any specific commercial product, process, or service by trade name, trademark, manufacturer, or otherwise, does not necessarily constitute or imply its endorsement, recommendation, or favoring by the United States Government or any agency thereof or its contractors or subcontractors. The views and opinions of authors expressed herein do not necessarily state or reflect those of the United States Government or any agency thereof.

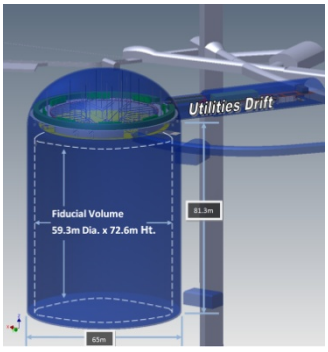

Water Cherenkov Detector

Basis of Estimate

Forms and Backup Documentation

LBNE Far Site Internal Review

Dec 6-9, 2011

	LBNE Water Cherenkov Detector **BASIS of ESTIMATE FORM (BoE)**	**Date of Estimate: 15 September, 2011** **Revision #: 0** **Prepared By: Penka Novakova** **Approved By:** **Level 2 Manager**

WBS Number:	**WBS Title:**
130.04.01	**WCD Project Management**

WBS Dictionary: This element includes the general project management of the design, construction and testing of the Water Cherenkov Detector (WCD). It includes all activities related to the management and administration to ensure that construction activities meet the project goals and that work is done in accordance with DOE Cost, Schedule and Technical Guidelines. This consists of a sub-project Manager, and a project office activities with primary responsibility to ensure that project goals and objectives are successfully accomplished. They will report to the LBNE project management office, using earned-value-management, their tracking performance of cost, schedule and variance reporting. This element will provide for computers, software and supplies for the WCD project office along with travel costs.

Cost Type **(check all that apply):**	**Costing Method** **(check all that apply):**
_x__ EDIA Material _x__ EDIA Labor ___ MFG Material ___ MFG Labor	___ Engineering Judgment ___Physicist Estimate _x_ Level of Effort ___ Vendor Quote (attached) ___ Catalog Price (specify) ___ Prior purchase _x_ Prior experience ___ Parametric Estimate ___ Other- Description:_____

Attach Relevant Documents (including but not limited to):

M&S Contingency (%)**: 10%**	**Labor Contingency** (%)**: 18%**

Basis of Estimate

Details of Estimate:

The WCD Sub-project comprises the design and fabrication of a Water Cherenkov Detector in an existing cavern. The WCD project consists of seven Level 3 systems: Water Containment (WBS 1.4.2), Photon Detectors (PMTs, WBS 1.4.3), Electronics/Readout (WBS 1.4.4), Calibration (WBS 1.4.5), Water System (WBS 1.4.6), Computing (1.4.7), Integration/Installation/Safety (WBS 1.4.8).

Overall WCD management effort is captured in 1.4.1 WBS element, Project Management. The WCD Project Management Office is located at Brookhaven National Laboratory. The assumption is that one scientist will work full time as WCD Project Manager (WCD PM) for the entire duration of the project. One full time Project Controls Specialist is required during all phases of the project and a part time scheduler will be contracted as needed. A Chief Engineer will work 50% of his time on the design, technical requirements, engineering documentation and coordination with other LBNE Sub-projects. The other 50% of his time he/she will spend as a Level 3 manager for Installation/Integration. In addition to this an administrative assistant part-time in FY11 and full time after FY12 will be working for the PO.

Project Management overview

The Water Cherenkov Detector planning and management is closely coordinated with the LBNE-PO. The Water Cherenkov Detector Sub-project Manager (WCD-PM) maintains close contact with the LBNE Project Manager (LBNE-PM), the LBNE Spokesperson, and the NSF S4 Principal Investigator (NSF PI).

WCD Sub-project Manager

The WCD-PM has the responsibility of providing programmatic coordination and management for the WCD Sub-project. He/she represents the WCD Sub-project in interactions with overall LBNE management, the NSF PI, DUSEL, SDSTA, the DOE, the universities and national laboratories involved. He/she reports to the BNL Director (or his/her appointed representative). The WCD-PM is advised in this role by a Technical Board, which includes all System Managers.

The management responsibilities of the Sub-project Manager include:

1. Appointing, after consultation with the Collaboration, LBNE-PM and BNL Director, of System Managers (SMs) responsible for coordination and management within each detector system. The SMs will serve with the WCD-PM's continuing concurrence.
2. Preparing the yearly funding requests, including contingency, to LBNE Project Office for the anticipated WCD activities.
3. Recommending to LBNE the institution-by-institution funding allocations to support the WCD efforts. These recommendations will be made with the advice of the SMs, and the Technical Board.
4. Approving budgets and allocating funds in consultation with the SMs and managing contingency budgets in accord with the Change Control Process.
5. Establishing, with the support of BNL management, a WCD Project Office with appropriate support services.
6. Working with BNL management to set up and respond to whatever advisory or other mechanisms BNL management feels necessary to carry out its oversight responsibility.
7. Keeping the BNL Director or his chosen representative well informed on the progress of the WCD effort, and reporting promptly any problems whose solutions may benefit from the joint efforts of the WCD-PM and BNL management.
8. Interacting with LBNE-PM on issues affecting resource allocation and availability, and on the preparation of the MOU defining WCD deliverables.
9. Negotiating and signing the Institutional MOUs representing agreements between the WCD Project Office and the collaborating institutions specifying the deliverables to be provided and the resources available on an institution-by-

institution basis.
10. Monthly reporting on project status and issues to the LBNE-PO.
11. Conducting, as needed, meetings with the WCD Technical Board to discuss budget planning, schedule, milestones, and other WCD management issues.
12. Making periodic reports about important issues to the LBNE collaboration.
13. Overseeing WCD ES&H Management.

WCD Chief Engineer

The Chief Engineer provides the required technical coordination and support for the overall WCD Sub-project. The duties and responsibilities include:

- Reviewing and validating the rationale and accuracy of technical system cost estimates and schedule baselines.
- Establishing procurement plans.
- Reviewing the feasibility and accuracy of production plans and technology choices.
- Coordinating Quality Assurance, Environmental, Safety and Health issues and compliance.
- Assessing technical and work progress at the collaborating institutions and their vendors.
- Assisting in overall WCD integration and installation.
- Serving as members of the Change Control Board.

Project Controls

The Project Planning and Controls Specialist has the following duties and responsibilities:

- Developing and maintaining the integrity of the Budget Baseline, Milestone Baseline, Contingency, Baseline Change Proposal (BCP) System.
- Establishing the annual funding requirements for each Institution.
- Serving as a member of the Change Control Board.
- Developing and validating the accuracy of the Earned Value reporting system
- Reporting cost performance
- Variance Analysis
- Developing and maintaining the resource loaded project schedules
- Validating consistency of resource loaded schedules with project funding profile
- Establishing schedule links and verifying schedule logic
- Assessing, on a monthly basis, the status of both Earned Value and activity progress of project schedules on a monthly basis
- Performing Critical Path Analysis including identification of critical path items for remedial action

Administration

The administrative assistant provides clerical and administrative support for the WCD management team. A full time commitment is assumed after FY12.

1. Make travel arrangements.
2. Assemble and edit progress reports.
3. Develop and maintain a website for communication within the WCD working group.
4. Update the cost estimating database and the schedule
5. Generate reports for reviews and meetings
6. Other administrative assignments as needed

Travel and M&S

Approximately 20 trips per year are estimated. This is to cover the project management team travel to collaboration meetings, reviews, project management, engineering and scientific meetings. The material cost is to cover the needs for office supplies, equipments and licenses.

Assumptions/Interfaces
The funding is available on Oct 1 of each fiscal year.

Constraints

Comments

130.04.01 WCD Project Management

WBS LEVEL 5	ACTIVITY ID	ACTIVITY DESCRIPTION	START DATE	FINISH DATE	DURATION	RESOURCE	HOURS	COST	TOTAL with Escalation
130.04.01 WCD Project Manage	PM1510	Project Management FY10	1/11/2010	9/29/2010	183	BNL M&S CS Laboratory Equipment		50,001	54,301
						BNL M&S CS Travel		25,000	38,217
						General ES&H A6	672	67,720	110,452
						Mechanical Engineer P5	666	65,113	106,200
						Project Controls A4	1,336	81,559	133,022
						Project Manager S4	1,336	160,032	261,013
		Project Management FY10 Total					4,009	449,425	703,205
	PM1520	Project Management FY11	9/30/2010	9/27/2011	248	Administrative Support A1	1,425	46,530	77,923
						BNL M&S CE Costs		39,999	41,070
						BNL M&S CS PO Purchases		34,088	40,917
						BNL M&S CS Service Contract		54,999	86,329
						BNL M&S CS Travel		20,001	31,395
						General ES&H A6	356	35,866	60,064
						Mechanical Engineer P5	890	87,029	145,746
						Project Controls A4	1,699	103,714	173,689
						Project Manager S4	1,781	213,340	357,277
		Project Management FY11 Total					6,151	635,567	1,014,409
	PM1540	Project Management FY12 - Pre CD-1	9/28/2011	6/22/2012	184	Administrative Support A1	1,200	39,194	65,970
						BNL M&S CS Laboratory Equipment		20,000	22,895
						BNL M&S CS Service Contract		50,000	80,570
						BNL M&S CS Travel		15,000	24,170
						Mechanical Engineer P5	668	65,289	109,893
						Project Controls A4	1,200	73,242	123,280
						Project Manager S4	1,336	160,035	269,366
		Project Management FY12 - Pre CD-1 Total					4,404	422,760	696,145
	PM1545	Project Management FY12 - Post CD-1	6/25/2012	9/20/2012	61	Administrative Support A1	400	13,059	18,226
						BNL M&S CS PO Purchases		10,000	12,330
						BNL M&S CS Service Contract		35,000	56,431
						BNL M&S CS Travel		5,000	8,062
						Mechanical Engineer P5	251	24,567	34,274
						Project Controls A4	400	24,430	34,084
						Project Manager S4	502	60,161	83,961
		Project Management FY12 - Post CD-1 Total					1,554	172,218	247,368
	PM1550	Project Management FY13 - Pre CD-2	9/21/2012	7/12/2013	200	Administrative Support A1	1,554	50,742	69,729
						BNL M&S CS Laboratory Equipment		25,000	29,382
						BNL M&S CS Service Contract		60,000	99,262
						BNL M&S CS Travel		20,000	33,087
						Mechanical Engineer P5	778	76,050	104,506
						Project Controls A4	1,554	94,874	130,374

	PM1550	Project Management FY13 - Pre CD-2	9/21/2012	7/12/2013	200	Project Manager S4	1,554	186,185	255,852
		Project Management FY13 - Pre CD-2 Total					5,440	512,851	722,192
	PM1560	Project Management FY13 - Post CD-2	8/23/2013	9/27/2013	25	Administrative Support A1	246	8,016	11,017
						BNL M&S CS Laboratory Equipment		6,000	7,058
						BNL M&S CS Travel		5,000	8,279
						Mechanical Engineer P5	123	11,999	16,491
						Project Controls A4	245	14,958	20,558
						Project Manager S4	246	29,412	40,425
		Project Management FY13 - Post CD-2 Total					859	75,385	103,829
	PM1570	Project Management FY14	9/30/2013	9/24/2014	246	Administrative Support A1	1,781	58,152	82,065
						BNL M&S CS Laboratory Equipment		30,000	36,235
						BNL M&S CS Service Contract		100,000	170,017
						BNL M&S CS Travel		25,001	42,506
						Mechanical Engineer P5	891	87,048	122,844
						Project Controls A4	1,781	108,735	153,450
						Project Manager S4	1,781	213,374	301,117
		Project Management FY14 Total					6,234	622,311	908,233
	PM1580	Project Management FY15 - Pre CD-3	9/25/2014	12/19/2014	59	Administrative Support A1	486	15,868	22,952
						BNL M&S CS Laboratory Equipment		10,000	12,378
						BNL M&S CS Service Contract		20,000	34,850
						BNL M&S CS Travel		5,000	8,713
						Mechanical Engineer P5	243	23,761	34,369
						Project Controls A4	445	27,159	39,285
						Project Manager S4	486	58,225	84,217
		Project Management FY15 - Pre CD-3 Total					1,660	160,014	236,763
	PM1590	Project Management FY15 - Post CD-3	12/22/2014	9/21/2015	187	Administrative Support A1	1,300	42,448	61,536
						BNL M&S CS Laboratory Equipment		20,001	24,814
						BNL M&S CS Service Contract		80,000	139,711
						BNL M&S CS Travel		14,999	26,195
						Mechanical Engineer P5	640	62,515	90,627
						Project Controls A4	1,300	79,346	115,026
						Project Manager S4	1,300	155,751	225,789
		Project Management FY15 - Post CD-3 Total					4,539	455,059	683,697
	PM1600	Project Management FY16	9/22/2015	9/19/2016	254	Administrative Support A1	1,781	58,151	86,501
						BNL M&S CS Laboratory Equipment		30,001	38,192
						BNL M&S CS Service Contract		50,000	89,599
						BNL M&S CS Travel		25,001	44,802
						Mechanical Engineer P5	889	86,900	129,267
						Project Controls A4	1,781	108,705	161,703
						Project Manager S4	1,781	213,370	317,395
		Project Management FY16 Total					6,232	572,127	867,459

	PM1610	Project Management FY17	9/20/2016	9/14/2017	258	Administrative Support A1	1,781	58,147	88,812
						BNL M&S CS Laboratory Equipment		30,000	39,215
						BNL M&S CS Service Contract		40,000	73,603
						BNL M&S CS Travel		20,000	36,801
						Mechanical Engineer P5	890	87,007	132,892
						Project Controls A4	1,780	108,684	166,000
						Project Manager S4	1,781	213,357	325,872
		Project Management FY17 Total					6,232	557,196	863,194
	PM1620	Project Management FY18	9/15/2017	9/11/2018	258	Administrative Support A1	1,781	58,147	91,194
						BNL M&S CS Laboratory Equipment		30,000	40,265
						BNL M&S CS Service Contract		40,000	75,573
						BNL M&S CS Travel		20,000	37,786
						Mechanical Engineer P5	890	87,007	136,457
						Project Controls A4	1,780	108,684	170,453
						Project Manager S4	1,781	213,357	334,614
		Project Management FY18 Total					6,232	557,196	886,341
	PM1630	Project Management FY19	9/12/2018	9/9/2019	259	Administrative Support A1	1,780	58,121	93,595
						BNL M&S CS Laboratory Equipment		30,000	41,344
						BNL M&S CS Service Contract		40,000	77,596
						BNL M&S CS Travel		20,000	38,798
						Mechanical Engineer P5	891	87,091	140,249
						Project Controls A4	1,779	108,631	174,936
						Project Manager S4	1,780	213,260	343,425
		Project Management FY19 Total					6,231	557,103	909,943
	PM1640	Project Management FY20	9/10/2019	9/7/2020	260	Administrative Support A1	1,779	58,092	96,059
						BNL M&S CS Laboratory Equipment		25,001	35,378
						BNL M&S CS Service Contract		40,000	79,675
						BNL M&S CS Travel		19,999	39,836
						Mechanical Engineer P5	889	86,919	143,727
						Project Controls A4	1,781	108,733	179,797
						Project Manager S4	1,779	213,156	352,465
		Project Management FY20 Total					6,229	551,901	926,937
	PM1650	Project Management FY21	9/8/2020	9/3/2021	259	Administrative Support A1	1,780	58,121	98,684
						BNL M&S CS Laboratory Equipment		30,000	43,587
						BNL M&S CS Service Contract		40,000	81,810
						BNL M&S CS Travel		20,000	40,903
						Mechanical Engineer P5	891	87,091	147,874
						Project Controls A4	1,779	108,631	184,447
						Project Manager S4	1,780	213,260	362,096
		Project Management FY21 Total					6,231	557,103	959,402
	PM1660	Project Management FY22	9/6/2021	6/10/2022	200	Administrative Support A1	1,334	43,566	75,860
						BNL M&S CS PO Purchases		15,000	24,058
						BNL M&S CS Travel		15,000	31,460

	PM1660	Project Management FY22	9/6/2021	6/10/2022	200	Mechanical Engineer P5	667	65,154	113,453
						Project Controls A4	1,335	81,485	141,890
						Project Manager S4	1,334	159,855	278,350
		Project Management FY22 Total					4,670	380,061	665,071
130.04.01 WCD Project Management Total							**76,907**	**7,238,277**	**11,394,188**
Grand Total							**76,907**	**7,238,277**	**11,394,188**

LBNE	**LBNE Water Cherenkov Detector** **BASIS of ESTIMATE FORM (BoE)**	**Date of Estimate: November 2011** **Revision #: 3** **Prepared By: Robert Paulos** **Approved By:** **Level 2 Manager**

WBS Number:	**WBS Title:**
130.04.02.01	**Management and Safety**

WBS Dictionary:

This element includes the general management of the water containment system and all activities related to management and administration to ensure that construction activities meet the project goals and that work is done in accordance with DOE Cost, Schedule and Technical Guidelines.

Cost Type **(check all that apply):**	**Costing Method** **(check all that apply):**
_X_ EDIA Material _X_ EDIA Labor ___ MFG Material ___ MFG Labor	_X_ Engineering Judgment ___Physicist Estimate ___ Level of Effort ___ Vendor Quote (attached) ___ Catalog Price (specify) ___ Prior purchase _X_ Prior experience ___ Parametric Estimate ___ Other- Description:_____

Attach Relevant Documents (including but not limited to):

M&S Contingency (%): **15**	**Labor Contingency** (%): **24**

Basis of Estimate
Details of Estimate: Management Approach The Water Containment (WC) is a large undertaking with several (nine) major sub-elements and several (at least six) institutions playing key roles. Communication and coordination amongst these elements and with the LBNE project requires a substantial management presence to ensure project success. Overall WC management effort is captured in the 130.4.2.1 WBS element, Management and Safety. The assumption for management in the current estimate is that one full-time manager for the WC is required during all phases of the project following CD1. Some of the specific tasks that will be required of the vessel manager are listed below and form the BOE for management. **Brief Labor Description (detailed labor estimates appear in the cost book):** Overall Water Containment management effort is captured in the 130.4.2.1 WBS element, Management and Safety. The assumption for management in the current estimate is that one full-time manager for the WC is required during all phases of the project following CD1. Some of the specific tasks that will be required of the vessel manager are listed below and form the BOE for management. The resource identifier in the cost book for the WC Manager is SR_MANAGER UW. In addition to the Water Containment manager, there will be a primary contract manager for the vessel subcontractor (not included in this WBS element). The labor required for vessel subcontract management is included in the Vessel/Liner cost element, 130.4.2.2. Plans and Controls - By FY 13 a part-time Plans and Controls specialist will work with vessel management and the project office to develop and implement the earned value system that will be required of the project. The plans and controls specialist starts in FY10 and will work through constructions completion. Effort in this area peaks during the final design phase, and ramps down in subsequent years. This position will report to the vessel manager and will have responsibility for maintaining budgets, schedules, and reports for the vessel and its subsystems. The resource identifier for this position is UW_PRJPLNGANDCNTRLS. Administrative Support – An Administrative Assistant will work with the vessel manager and subsystem managers to provide day-to-day administrative support and is budgeted at a fraction of an FTE from FY10 through the end of construction. The resource identifier for this position is UW_ADMIN. Logistics Support Manager - A part-time logistics manager will is budgeted to coordinate and oversee logistics planning, equipment transport, and delivery. The position starts in FY14 and continues through construction completion. The vessel system will include the transport of hundreds of truckloads of equipment from multiple locations in the US and possibly worldwide (e.g. low radioactivity steel and concrete). The cost book resource identifier for the logistics manager is UW_LOGISTICSMANAGER. Safety Manager - A safety manager is budgeted for the vessel project from FY11 through construction completion. This position will work with the vessel manager and subsystem leads to ensure that all processes meet safety requirements. The cost book resource identifier for the safety manager is UW_PRJMANAGER.

Management BOE/tasks
o attend weekly technical board/project management calls
o organize and conduct weekly vessel technical meeting
o organize and conduct periodic technical progress reviews
o conduct one-on-one management meetings with subsystem leads
o organize and conduct monthly status meetings
o conduct assessments of plans and progress and report to LBNE management
o coordinate and manage interface definition and development between subsystems
o coordinate and manage interface definition and development between the vessel and other level three systems
o provide oversight on all vessel subcontract matters
o participate or lead the development of vessel subcontracts and subsequent renewals
o develop plans and implement earned value reporting to the project office
o develop detailed budget estimates
o develop detailed schedules and resource loading
o develop and coordinate staffing plans with subsystem leads
o develop university funding requests
o interface to university administration, including progress reports and special requests for information
o develop purchasing strategies with university central purchasing office and project management
o coordinate with university research and sponsored programs office
o coordinate with subsystem lead institutional representatives regarding funding, purchasing, and personnel related matters
o conduct value engineering throughout the project
o provide oversight on all installation supervision tasks at the technical level

Material Details

The management wbs cost element includes $3000 per year for miscellaneous charges in this area. Examples are webex meeting charges, long distance phone calls, project specific software costs, etc.

Travel Detail

Travel expenses for the vessel manager are included in this estimate and vary from year-to-year based on the anticipated amount of off-site activity that may be required. Examples of the trips planned include participation in critical design reviews, travel to vendors, cost and schedule reviews at DOE facilities, and planning meetings at collaborating institutions and DOE labs. Average airfare is $700. Average daily expenses are $190 per day and include the cost of lodging, meals, car rental, and parking fees.

Contingency & Method

Contingency was determined based on past management experience on large facility projects at UW (e.g. IceCube, CMS).

Assumptions

The assumption throughout the WC budget estimate is that this WBS (1.4.2) will be managed by the University of Wisconsin. Engineers from the Physical Sciences Laboratory and the IceCube Research

Center will support the effort. Some Level 4 elements within the WC effort will be lead by individuals from outside UW, e.g. Duke, Fermilab. This type of management arrangement exists now and is reflected elsewhere in the 1.4.2 budget estimate.

130.04.02.01 Management and Safety

WBS LEVEL 5	ACTIVITY ID	ACTIVITY DESCRIPTION	START DATE	FINISH DATE	DURATION	RESOURCE	HOURS	COST	TOTAL with Escalation
130.04.02.01.01 Management	WC1050	Conceptual Design Phase, preparation for CD-1	1/11/2010	5/4/2012	581	BNL M&S CE from UW: Admin Support	854	39,808	40,592
						BNL M&S CE from UW: Project Controls	941	49,489	50,464
						BNL M&S CE from UW: Sr. Project Management	1,714	289,229	294,922
						BNL M&S CE Supplies		8,918	8,979
						BNL M&S CE from UW: Travel		22,281	22,433
		Conceptual Design Phase, preparation for CD-1 Total					3,509	409,726	417,389
	WC1060	Preliminary Design Phase, preparation for CD-2	5/7/2012	10/28/2013	370	BNL M&S CE from UW: Admin Support	855	39,838	41,324
						BNL M&S CE from UW: Project Controls	1,499	78,791	81,730
						BNL M&S CE from UW: Sr. Project Management	3,423	577,547	599,092
						BNL M&S CE Supplies		8,921	9,354
						BNL M&S CE from UW: Travel		43,549	45,662
		Preliminary Design Phase, preparation for CD-2 Total					5,776	748,645	777,162
	WC1070	Final Design Phase, preparation for CD-3	10/29/2013	1/23/2015	305	BNL M&S CE from UW: Admin Support	857	39,947	42,839
						BNL M&S CE from UW: Logistics	857	83,220	89,243
						BNL M&S CE from UW: Project Controls	1,711	89,967	96,479
						BNL M&S CE from UW: Sr. Project Management	3,422	577,479	619,278
						BNL M&S CE Supplies		8,891	9,694
						BNL M&S CE from UW: Travel		46,546	50,753
		Final Design Phase, preparation for CD-3 Total					6,847	846,050	908,286
	WC1080	Construction Phase	1/26/2015	5/6/2022	1889	BNL M&S CE from UW: Admin Support	1,285	59,871	71,971
						BNL M&S CE from UW: Logistics	2,569	249,454	299,867
						BNL M&S CE from UW: Project Controls	2,135	112,236	134,918
						BNL M&S CE from UW: Sr. Project Management	6,838	1,153,943	1,387,149
						BNL M&S CE Supplies		17,813	21,770
						BNL M&S CE from UW: Travel		70,271	85,880
		Construction Phase Total					12,826	1,663,588	2,001,556
130.04.02.01.01 Management Total							**28,959**	**3,668,009**	**4,104,393**
130.04.02.01.02 Safety	WC1095	Saftey	1/11/2010	5/6/2022	3145	BNL M&S CE from UW: Project Manager	2,736	321,607	365,484
		Saftey Total					2,736	321,607	365,484
130.04.02.01.02 Safety Total							**2,736**	**321,607**	**365,484**
Grand Total							**31,695**	**3,989,616**	**4,469,877**

	LBNE Water Cherenkov Detector **BASIS of ESTIMATE FORM (BoE)**	**Date of Estimate:** **Revision #3**
		Prepared By: Robert Paulos/Farshid Feyzi
		Approved By: **Level 2 Manager**

WBS Number: **1.04.02.02**	**WBS Title:** **Liner/Vessel**

WBS Dictionary:

This includes the water containment vessel starting from the stabilized rock wall inward, the floor slab upward and deck downward containing all within except the Photo Multiplier Tubes (PMT) assemblies.

Cost Type **(check all that apply):** _x_ EDIA Material _x_ EDIA Labor _x_ MFG Material _x_ MFG Labor	**Costing Method** **(check all that apply):** _x_ Engineering Judgment ___Physicist Estimate _x_ Level of Effort _x_ Vendor Quote (attached) ___ Catalog Price (specify) ___ Prior purchase ___ Prior experience ___ Parametric Estimate ___ Other- Description:_____

Attach Relevant Documents (including but not limited to):

M&S Contingency (%): **33**	**Labor Contingency** (%): **21**

Basis of Estimate
Summary of Estimate: This WBS element contains two level 5 elements. The WBS dictionary definition and basis of estimate for each are summarized in the table below. Detail basis of estimates for each level 5 element follow. WBS 1.4.2.2.1 Vessel/Liner This element includes the water containment vessel starting from the rock wall inward and the waterproofing and drainage layers. The current design baseline is a waterproof layer attached directly to a finished shotcrete surface. Other budgeted items include provision for PMT support, the design and construction contracts with outside vendors, and labor for engineering and subcontract management. Travel budgets appropriate to this element are included. WBS 1.4.2.2.3 Cable trays This element includes all cable passages and cable management hardware to route all cables from PMT assemblies to electronics racks. The estimate includes labor for engineering design and subcontract supervision. 1.4.2.2.1 Details of Estimate: **The following is a brief description of labor type, effort, and responsibilities. Details can be found in the cost book.** Mechanical engineer will be responsible for overall integration of vessel design with other subsystems during the entire project. This is a level of effort estimate based on similar past projects. Mechanical designer will be responsible for all drawings and 3-d modeling of vessel design in support of mechanical engineer and all detail drawings. This is a level of effort estimate based on similar past projects. Mechanical technician is responsible for set up and construction of vessel and liner prototypes for testing. It is a level of effort estimate based on similar past projects. Senior mechanical engineer is responsible for project definition, development of requirements, organization of design team and assignment of responsibilities, writing and editing design document and CDR, assist in development of SOW for design and construction contracts, evaluation of responses and selection of contractors. This is a level of effort estimate based on similar past projects. Electrical engineer is responsible for project definition as it relates to electrical integration of PMT cable routing and cable management. EE works as a liaison with the engineering team in task 1.4.3. This is a level of effort estimate based on similar past projects. Senior manager is responsible for overall final design and coordination within this function. The SM is also responsible for the execution of the design contract. This is a level of effort estimate based on similar past projects.

Material BOE

Material BOE for FY10 (Note these are sunk costs)

A design contract for 15% design of vessel and liner for $350,000.
A $20,000 allowance for additional consulting contracts required for the following:
- Review of statement of work for design contract
- Review of responses and selection of contactor
- Review of work as needed by contractor
- Other consulting as needs arise

Domestic travel as described below:
$150 per day room and board
$60 per day local transportation
$700 airfare

Purpose	No. of trips	Duration (days)	Cost
Collaboration	4	4	$6160
BNL	3	3	$3990
Vendor visits	4	3	$5320

The cost book totals for travel have an additional indirect rate of 48.5% included on the above costs.

Material BOE for FY11 (Note these are sunk costs)

A design contract for conceptual design of vessel and liner. It is estimated as described below. This item is capitalized with overall vessel and liner construction and has no indirect cost.

Domestic travel by mechanical engineer as described below:

Purpose	No. of trips	Duration (days)	Cost
Collaboration	4	4	$6160
BNL	3	3	$3990
Vendor visits	4	3	$5320

The cost book totals for travel have an additional indirect rate of 48.5% included on the above costs.

Material BOE for FY12

A design contract for preliminary design of vessel and liner. Estimated amount for FY12 is $400K. This item is capitalized with overall vessel and liner construction and has no indirect cost.

Domestic travel by staff as described below:

Purpose	No. of trips	Duration (days)	Cost
Collaboration	4	4	$6160
BNL	3	3	$3990
Vendor visits	4	3	$5320

The cost book totals for travel have an additional indirect rate of 48.5% included on the above costs.

Prototypes are estimated at $250,000 for this year. The exact scope of prototype work will be determined during the preliminary design phase. Items under consideration are vessel structure, liner seams, drainage layers, penetrator seals, effects of PMT implosion, etc. Indirect rate of 48.5% applies and is included in cost book.

Material BOE for FY13

A contract for final design of vessel and liner. Estimated amount for FY13 is $1.95M. This item is capitalized with overall vessel and liner construction and has no indirect cost.

Domestic travel by staff as described below:

Purpose	No. of trips	Duration (days)	Cost
Vendor visits	4	3	$5320

The cost book totals for travel have an additional indirect rate of 48.5% included on the above costs.

Prototypes are estimated at $200,000 for this year. The exact scope of the prototype will be determined during the preliminary design phase. Items under consideration are vessel structure, liner seams, drainage layers, penetrator seals, effects of PMT implosion, etc. Indirect rate of 48.5% applies and is included in cost book.

Material BOE for FY14

Domestic travel by staff as described below:

Purpose	No. of trips	Duration (days)	Cost
Vendor visits	4	3	$5200

The cost book totals for travel have an additional indirect rate of 48.5% included on the above costs.

Material BOE for FY15 through FY20

Includes a contract for construction of a vessel and liner system. The estimated cost for this contract is $8.6M. This is based on estimated cost from design studies completed in FY11 to evaluate the most efficient and cost effective method of water containment. The study considered a range of design options including freestanding, concrete on rock, and liner directly on shotcrete for 100kT fiducial volumes. The $8.6M estimate is geometrically scaled up from 100 to 200kT, i.e. the ratio of areas was used as a multiplier. This ratio is 19675/12743. This item is capitalized, i.e. overall vessel and liner construction and has no indirect cost associated with it.

Specific BOE for vessel/liner construction cost estimate is shown below as described by the design firm under contract at the time.

Basis of Costs and Assumptions:

Costs are based on 2Q2010 with no provisions for escalation
The average crew size is 10 people and work is based on three shifts per day.
Most work will be on a 24/5 basis
The estimates assume approximately 1hr per shift for safety meetings, training, daily briefing and work planning

All temporary power and ventilation is existing.
The Yates shaft to be used for all material handling.
Optimally the material hoist should be available 24/7. A loss of efficiency of 20% has been applied to labor
It is assumed that operation of the hoist is by others and that rail would be in place along the drift for transporting construction materials.
It is assumed all materials except concrete will be transported on the hoist. A slick line of sufficient capacity will be installed in the Yates shaft for concrete and shotcrete delivery. No cost is included for suspending any materials underneath the hoist.
The cost of concrete buggies is included but rail cars or other means of transport in the drifts are not included.
It is assumed that there will be an overhead crane/hoisting system in place within the cavern with operation by others. Cost of the crane system and operation are not included as part of this estimate, but are included in the University of Wisconsin costs
For estimating purposes for all options assume a 53M tank diameter and 55M height
The floor is assumed to be stable. Ground slab thickness is assumed to be 2 feet thick as a minimum structural element for all options, with shotcrete allowance to fill overbreak
Scaffolding is assumed to be full height standard steel tubular construction. Pricing is including in the tank liner equipment cost for all options.
Scaffolding and PPE equipment where applicable are included in the 'equipment' cost line item
Vessel is constructed after the cavern has been excavated and permanent support installed

****Current Baseline Design (Option 2C):**
A 4" layer of leveling shotcrete is included to allow for a smoother, even substrate for liner application
Inner liner assumption for Option 2C is 60mil HDPE
It is assumed that the floor layer construction is also 60mil HDPE
Inner liner installation is assumed to be from the top working down in lifts.
Labor is based on two crews of 12 people working 3 shifts 5 days per week

Excluded items:
Escalation
Upper deck and structure
Permanent lighting
PIU structural and PIU attachment anchors
PMT's
Any plumbing/piping, mechanical work except for perimeter drainage system.
Any excavation, backfill or removal of spoils
Sitework
Any ancillary facilities to the tank construction
Any ladders, portals or doors
Suspending any materials underneath the hoist
Sloped floor and drain system
Overhead crane and operating cost
Magnetic field compensation wire materials and installation

	Water Containment Vessel	Phase II										TD/GR	9/8/10
Component	Option 2C	COMPANY:										CHKD. BY:	DATE:
	Rock Face Integration Two Layer	Hatch Mott MacDonald										GR	9/8/10
			Labor		Material		Equipment		Contingency			Risk	Total Costs
	DESCRIPTION		Labor Costs		Material Costs		Equipment Costs		Construction Contingency			Risk Contingency	Total Costs
Option 2C	Rock Face Integration Liner Against Shotcrete												
WBS		WBS		WBS		WBS		WBS		WBS			
1.4.2.2.1.1	Mobilization	1.4.2.2.1.1.1	$ 750,000	1.4.2.2.1.1.3	$ 600,000	1.4.2.2.1.1.2	$ 150,000	1.4.2.2.1.1.4	$ -	1.4.2.2.1.1.5	$ -	$ 1,500,000	
1.4.2.2.1.3	Safety Plan	1.4.2.2.1.3.1	$ 15,000	1.4.2.2.1.3.3		1.4.2.2.1.3.2		1.4.2.2.1.3.4	$ -	1.4.2.2.1.3.5	$ -	$ 15,000	
1.4.2.2.1.4	Safety and PPE Meetings and Training	1.4.2.2.1.4.1	$ 392,730	1.4.2.2.1.4.3		1.4.2.2.1.4.2		1.4.2.2.1.4.4	$ -	1.4.2.2.1.4.5	$ -	$ 392,730	
1.4.2.2.1.7	Concrete floor slab finishing	1.4.2.2.1.7.1	$ 30,522	1.4.2.2.1.7.3	$ -	1.4.2.2.1.7.2	$ 2,524	1.4.2.2.1.7.4	$ -	1.4.2.2.1.7.5	$ -	$ 33,046	
1.4.2.2.1.8	Additional leveling shotcrete	1.4.2.2.1.8.1	$ 66,647	1.4.2.2.1.8.3	$ 357,714	1.4.2.2.1.8.2	$ 44,400	1.4.2.2.1.8.4	$ -	1.4.2.2.1.8.5	$ -	$ 468,761	
1.4.2.2.1.8	Finish shotcrete walls	1.4.2.2.1.8.1	$ 142,947	1.4.2.2.1.8.3	$ -	1.4.2.2.1.8.2	$ 11,821	1.4.2.2.1.8.4	$ -	1.4.2.2.1.8.5	$ -	$ 154,768	
1.4.2.2.1.8	Vessel drainage layer	1.4.2.2.1.8.1	$ 202,566	1.4.2.2.1.8.3	$ 108,801	1.4.2.2.1.8.2	$ 63,695	1.4.2.2.1.8.4	$ -	1.4.2.2.1.8.5	$ -	$ 375,062	
1.4.2.2.1.9	Vessel wall liner - Polymer	1.4.2.2.1.9.1	$ 642,043	1.4.2.2.1.9.3	$ 423,793	1.4.2.2.1.9.2	$ 318,787	1.4.2.2.1.9.4	$ -	1.4.2.2.1.9.5	$ -	$ 1,384,623	
1.4.2.2.1.9	Vessel floor liner - Polymer	1.4.2.2.1.9.1	$ 130,673	1.4.2.2.1.9.3	$ 92,494	1.4.2.2.1.9.2	$ 9,561	1.4.2.2.1.9.4	$ -	1.4.2.2.1.9.5	$ -	$ 232,728	
1.4.2.2.1.11	QA/QC and rework	1.4.2.2.1.11.1	$ 64,204	1.4.2.2.1.11.3	$ 4,238	1.4.2.2.1.11.2	$ 31,879	1.4.2.2.1.11.4	$ -	1.4.2.2.1.11.5	$ -	$ 100,321	
1.4.2.2.1.12	Demobilization	1.4.2.2.1.12.1	$ 120,000	1.4.2.2.1.12.3		1.4.2.2.1.12.2	$ 30,000	1.4.2.2.1.12.4	$ -	1.4.2.2.1.12.5	$ -	$ 150,000	
1.4.2.2.1.13	Indirects	1.4.2.2.1.13.1	$ 402,800	1.4.2.2.1.13.3	$ 258,400	1.4.2.2.1.13.2	$ 98,800	1.4.2.2.1.13.4	$ -	1.4.2.2.1.13.5	$ -	$ 760,000	
	$ 5,567,038		$ 2,960,131		$ 1,845,440		$ 761,467						

1.4.2.2.3 Details of Estimate:

Labor Details

A mechanical engineer will be responsible for overall integration and design, procurement and fabrication and installation supervision. The labor is estimated based on similar past projects.

Mechanical designer will be responsible for all drawings and 3-d modeling of vessel design and all detail drawings.

Electrical engineer is responsible for project definition as it relates to electrical integration of cables, routing and cable management. EE works in conceptual design phase only.

Material Details

All material details are based on in-house (UW/PSL engineering) estimates using standard rates and applied burden. All estimates are capitalized and have no additional indirect cost.

Travel for installation supervision for FY15 and FY16

Purpose	No. of trips	Duration (days)	Cost
DUSEL	4	4	$6160

The cost book totals for travel have an additional indirect rate of 48.5% included on the above costs.

Table1. Task Table

Assumptions/Interfaces

See above.

The rock surface has been stabilized and an initial layer of shotcrete (see design details in CDR document) has been applied. The floor slab has been poured and finished. Ground water collection has been installed.

Constraints

Comments

130.04.02.02 Liner/Vessel

WBS LEVEL 5	ACTIVITY ID	ACTIVITY DESCRIPTION	START DATE	FINISH DATE	DURATION	RESOURCE	HOURS	COST	TOTAL with Escalation
130.04.02.02.01 Vessel	WC1140	Vessel - Conceptual Design - Selection preferred a	1/11/2010	4/6/2010	60	BNL M&S CE from UW: Mechanical Designer	257	17,789	17,789
						BNL M&S CE from UW: Mechanical Engineer	343	31,156	31,156
		Vessel - Conceptual Design - Selection preferred a Total					599	48,945	48,945
	WC1150	Vessel - Conceptual Design - 15% design of preferr	4/7/2010	11/5/2010	150	BNL M&S CE from UW: Electrical Engineer	599	55,804	56,055
						BNL M&S CE from UW: Mechanical Designer	257	17,768	17,848
						BNL M&S CE from UW: Mechanical Engineer	342	31,101	31,241
						BNL M&S CE from UW: Sr. Electrical Engineer	86	9,850	9,895
						BNL M&S CE from UW: Sr. Mechanical Engineer	86	9,347	9,389
		Vessel - Conceptual Design - 15% design of preferr Total					1,368	123,871	124,428
	WC1151	Vessel - Conceptual Design - Design Contract						549,450	549,450
	WC1160	Value Engineering	11/8/2010	8/10/2011	188	BNL M&S CE from UW: Electrical Engineer	86	8,063	8,281
		Value Engineering Total					86	8,063	8,281
	WC1170	Vessel - Conceptual Design - Prepare for practice	8/11/2011	9/22/2011	30	BNL M&S CE from UW: Electrical Engineer	257	23,944	24,591
						BNL M&S CE from UW: Mechanical Designer	257	17,789	18,269
						BNL M&S CE from UW: Mechanical Engineer	342	31,129	31,969
						BNL M&S CE from UW: Sr. Electrical Engineer	86	9,850	10,116
						BNL M&S CE from UW: Sr. Mechanical Engineer	86	9,347	9,599
		Vessel - Conceptual Design - Prepare for practice Total					1,027	92,059	94,544
	WC1180	Vessel - Conceptual Design - Prepare for CD1	11/22/2011	1/23/2012	40	BNL M&S CE from UW: Electrical Engineer	257	23,944	24,713
						BNL M&S CE from UW: Mechanical Designer	257	17,789	18,360
						BNL M&S CE from UW: Mechanical Engineer	342	31,138	32,137
						BNL M&S CE from UW: Sr. Electrical Engineer	86	9,862	10,179
						BNL M&S CE from UW: Sr. Mechanical Engineer	86	9,358	9,658
						BNL M&S CE from UW: Travel		23,760	24,402
		Vessel - Conceptual Design - Prepare for CD1 Total					1,027	115,850	119,448
	WC1190	Vessel - Conceptual Design - Develop SOW for preli	5/16/2012	8/31/2012	75	BNL M&S CE from UW: Electrical Engineer	342	31,888	32,912
						BNL M&S CE from UW: Mechanical Designer	257	17,768	18,338
						BNL M&S CE from UW: Mechanical Engineer	342	31,101	32,100
						BNL M&S CE from UW: Sr. Electrical Engineer	86	9,850	10,167
						BNL M&S CE from UW: Sr. Mechanical Engineer	171	18,694	19,294
		Vessel - Conceptual Design - Develop SOW for preli Total					1,197	109,301	112,810
	WC1200	Vessel - Preliminary Design - A&E design contract	9/4/2012	1/11/2013	88	BNL M&S CE from UW: Mechanical Designer	599	41,518	43,018
						BNL M&S CE from UW: Mechanical Engineer	599	54,507	56,475
		Vessel - Preliminary Design - A&E design contract Total					1,199	96,025	99,493
	WC1210	Vessel - Preliminary Design - A&E design contract	9/25/2012	2/4/2013	88	BNL M&S CE Costs		400,000	421,247

WC1210	Vessel - Preliminary Design - A&E design contract Total						400,000	421,247
WC1220	Vessel - Preliminary Design - Prepare for CD2	2/4/2013	4/2/2013	40	BNL M&S CE from UW: Mechanical Designer	599	41,507	43,055
					BNL M&S CE from UW: Mechanical Engineer	599	54,491	56,524
					BNL M&S CE from UW: Travel		22,280	23,499
	Vessel - Preliminary Design - Prepare for CD2 Total					1,198	118,278	123,077
WC1230	Vessel - Preliminary Design - Develop SOW for fina	7/26/2013	12/2/2013	88	BNL M&S CE from UW: Mechanical Designer	599	41,518	43,612
					BNL M&S CE from UW: Mechanical Engineer	599	54,507	57,255
	Vessel - Preliminary Design - Develop SOW for fina Total					1,199	96,025	100,867
WC1240	Vessel - Final Design - A&E design contract Suppor	12/3/2013	11/21/2014	244	BNL M&S CE from UW: Electrical Engineer	514	47,954	51,288
					BNL M&S CE from UW: Mechanical Designer	600	41,536	44,423
					BNL M&S CE from UW: Mechanical Engineer	600	54,529	58,321
					BNL M&S CE from UW: Sr. Mechanical Engineer	600	65,550	70,108
					BNL M&S CE from UW: Sr. Project Management	256	43,190	46,193
	Vessel - Final Design - A&E design contract Suppor Total					2,569	252,760	270,333
WC1250	Vessel - Final Design - A&E design contract	12/19/2013	12/11/2014	244	BNL M&S CE Costs		1,950,000	2,123,394
	Vessel - Final Design - A&E design contract Total						1,950,000	2,123,394
WC1260	Vessel - Final Design - Prepare for CD3	12/11/2014	2/24/2015	48	BNL M&S CE from UW: Mechanical Designer	599	41,496	45,400
					BNL M&S CE from UW: Mechanical Engineer	599	54,477	59,603
					BNL M&S CE from UW: Sr. Mechanical Engineer	599	65,487	71,649
					BNL M&S CE from UW: Sr. Project Management	257	43,335	47,413
					BNL M&S CE from UW: Travel		22,280	24,784
	Vessel - Final Design - Prepare for CD3 Total					2,054	227,074	248,850
WC1270	Vessel - Final Design - Prototype and test	2/24/2015	2/23/2016	250	BNL M&S CE from UW: Electrical Engineer	428	39,860	44,066
					BNL M&S CE from UW: Mechanical Designer	600	41,562	45,947
					BNL M&S CE from UW: Mechanical Engineer	600	54,564	60,321
					BNL M&S CE from UW: Mechanical Technician	1,712	116,912	129,248
					BNL M&S CE from UW: Sr. Mechanical Engineer	600	65,592	72,513
					BNL M&S CE from UW: Sr. Project Management	258	43,453	48,038
					BNL M&S CE Supplies		668,250	751,120
	Vessel - Final Design - Prototype and test Total					4,197	1,030,193	1,151,254
WC1300	Vessel - Procurement and contracts	10/2/2018	9/17/2019	250	BNL M&S CE from UW: Mechanical Designer	1,198	82,951	100,959
					BNL M&S CE from UW: Mechanical Engineer	1,712	155,734	189,544
					BNL M&S CE from UW: Sr. Mechanical Engineer	1,712	187,209	227,853
					BNL M&S CE from UW: Sr. Project Management	513	86,484	105,260
	Vessel - Procurement and contracts Total					5,135	512,378	623,616
WC1320	Construction Vessel	3/3/2020	10/13/2020	160	BNL M&S CE Costs		8,595,422	10,937,343
	Construction Vessel Total						8,595,422	10,937,343
WC1325	Construction Vessel Support	3/4/2020	10/14/2020	160	BNL M&S CE from UW: Mechanical Designer	427	29,593	37,046
					BNL M&S CE from UW: Mechanical Engineer	856	77,845	97,450
					BNL M&S CE from UW: Sr. Mechanical Engineer	1,712	187,155	234,289
					BNL M&S CE from UW: Sr. Project Management	256	43,200	54,080

130.04.02.02.01 Vessel	WC1325	Construction Vessel Support	3/4/2020	10/14/2020	160	BNL M&S CE from UW: Travel		37,125	47,248
		Construction Vessel Support Total					3,251	374,917	470,112
130.04.02.02.01 Vessel Total							**26,108**	**14,700,612**	**17,627,491**
130.04.02.02.03 Cable Trays	WC1450	Cable Trays - Conceptual design	11/8/2010	4/5/2011	100	BNL M&S CE from UW: Electrical Engineer	171	15,944	16,375
		Cable Trays - Conceptual design Total					171	15,944	16,375
	WC1460	Cable Trays - Preliminary design	2/4/2013	11/19/2013	200	BNL M&S CE from UW: Mechanical Engineer	514	46,742	48,705
		Cable Trays - Preliminary design Total					514	46,742	48,705
	WC1470	Cable Trays - Final design	11/19/2013	9/10/2014	200	BNL M&S CE from UW: Mechanical Designer	600	41,562	44,276
						BNL M&S CE from UW: Mechanical Engineer	600	54,564	58,127
		Cable Trays - Final design Total					1,200	96,126	102,403
	WC1490	Cable Trays - Prototype and test	9/10/2014	2/6/2015	100	BNL M&S CE Costs		27,000	29,913
						BNL M&S CE from UW: Mechanical Engineer	342	31,101	33,889
		Cable Trays - Prototype and test Total					342	58,101	63,802
	WC1500	Cable Trays - Procurement and contracts	2/6/2015	6/30/2015	100	BNL M&S CE from UW: Mechanical Engineer	685	62,293	68,155
		Cable Trays - Procurement and contracts Total					685	62,293	68,155
	WC1509	Cable Trays - Fabrication Support	6/30/2015	4/18/2016	200	BNL M&S CE from UW: Mechanical Engineer	342	31,102	34,651
		Cable Trays - Fabrication Support Total					342	31,102	34,651
	WC1510	Cable Trays - Fabrication	6/30/2015	4/18/2016	200	BNL M&S CE Costs		725,400	821,679
		Cable Trays - Fabrication Total						725,400	821,679
	WC1530	Cable Trays - Install on vessel	8/18/2020	11/10/2020	60	BNL M&S CE from UW: Mechanical Engineer	685	62,258	78,788
						BNL M&S CE from UW: Travel		8,910	11,463
		Cable Trays - Install on vessel Total					685	71,168	90,250
130.04.02.02.03 Cable Trays Total							**3,939**	**1,106,878**	**1,246,019**
Grand Total							**30,046**	**15,807,490**	**18,873,510**

LBNE Water Containment Vessel Phase 2 Report

For:

Physical Sciences Laboratory
University of Wisconsin-Madison

By:

CNA Consulting Engineers

Simpson Gumpertz and Heger

Hatch Mott MacDonald

December 2010

Revision Record

REVISION	DESCRIPTION	DATE
Rev 0.1	Initial Assembly	September 2010
Rev 10	Draft for Team Review	October 2010
Rev 19	Peer Review	December 2010

Table of Contents

Introduction **1**

Co□□□ □nt □□rpo□□ 1
T□r□ □no□o□□ 1
Top□□□ not Addr□□□□d 1
Un□t□ ..... □
□ont□nt□ ..... □

Design Criteria **2**

Vessel Concepts **2**

□on□□pt□R□□o□ □ □nd□d □n □□□□ 1 ..... □
B□□□□n□V□□□□□□ □□ □n□on□ 3
□on□□pt □A ..... □
□o□pon□nt ..... □
L□n□r Mo□nt□n□ □nd □tr□□t□r□□Att□□□□ □nt□ 7
□ □□□□oor □on□□□r□t□on 9
□r□n□□□ □nd □□□□no□t□ ..... 1 □
□on□□pt □□ ..... 1 □
□o□pon□nt ..... 1 □
□ □□□□oor □on□□□r□t□on 19

Vessel Design **19**

□□□□□n Lo□d□ □□□ □ □r□ 19
□□□□□n M□t□odo□o□□ ..... □
□tr□□t□r□□□ □□□□n o□□on□□pt □A 1
□o□pon□nt□ □nd Lo□d□ 1
□□□□□n B□□□□ 1
□ □□□T□□□□n□□□Opt□on ..... □
E□t□rn□□□r□□□□r□ □on□d□r□t□on 3
Ant□□p□t□d □r□□□□r□□ 3
□r□□□□r□L□□□t□□or B□□□□□n□ □nd □o□pr□□□on ..... □
□r□□□□r□□ □nd B□□□□□or□n □□r□□□ ..... □

Liner Concepts **26**

L□n□r T□p□□ □nd M□t□r□□□ ..... □
□o□□□ □r □□□□t L□n□r□ ..... □
□o□d □□□d App□□d M□□ □r□n□□ 7
□t□n□□□□ □t□□□□ 7
I□p□rt□□□ 7
□ or□ □n□□ □□□□□ 1 R□port ..... □
□o□□□ □r L□n□r M□t□r□□□rop□rt□□ ..... □
□o□□□ □r L□n□r H□□tor□□□U□□□□ ..... □
□o□□□ □r L□n□r □□r□□□L□□ 9
□o□□□ □r L□n□r L□□□R□t□□ ..... 3 □
□□□tor□A□□□t□n□L□□□□□□ ..... 3 □
L□□□□□□R□t□□ □or L□nd□□□, I□po□nd□ □nt□ □nd □ond□ ..... 3 □
□o□□□ □r L□□□□T□□t□n□ 31
H□p□r K H□□E L□n□r ..... 3 □
□□□□□t□on □rt□r□□ ..... 3 □
M□t□r□□□ □o□p□t□□□ □□t□Opt□on □□ ..... 3 □
R□p□□r□pro□□d□r□□ ..... 3 □
□□□□□t□□□□ontro□□□ □□□t□A□□□r□n□□M□t□od□ ..... 3 □

Ro□□o□□rop□r In□t□□□t□on .... 3□
I□port□n□□o□□□□□A 33
L□□□□□□t□□t□on 33
In□p□□t□on .... 3□
□□po□□t□on□□□□no□t□□□t□r □r□□□□r□□□□□□n .... 3□
R□□o□□□nd□d N□□t □□□□□□T□□t□n□ □nd An□□□□□ .... 3□

Constructability, Risk, Cost, Schedule 35

□on□tr□□t□□□□t□ .... 3□
□□n□r□□□on□tr□□t□□□□t□ I□□□□□ .... 3□
□on□□pt□p□□□□□ □on□tr□□t□□□□t□ I□□□□□ .... 3□
R□□□A□□□□□□□□nt 37
□o□t B□□□□ .... 3□
□□□□d□□□B□□□□ .... □□
□ont□n□□n□□V□□□□ .... □1
E□p□r□□n□□ □nd En□□n□□r□n□ □□d□□□□nt□□□□□d □ont□n□□n□□ .... □1
R□□□R□□□□t□r□B□□□d □ont□n□□n□□ .... □1
□o□t □□□□□□□□r□ .... □3
□□□□d□□□□□□□□□□r□ .... □3

Future Design Considerations 44

Recommendations 45

□r□□□rr□d □on□□pt .... □□

List of Figures

□□□□r□ 1□ B□□□□□n□ V□□□□□□□□□n□□on□ 3
□□□□r□ □□ T□p□□□□ □□□□□□t□on □nd □□□□ □tr□□□□□□n□□on□o□□on□□pt □A □
□□□□r□ 3□ Hor□□ont□□□□□□t□on I□□□□tr□t□n□ □□□□ond, Int□r□□tt□nt □r□□n□□□□ □
□□□□r□ □□ T□o M□t□od□ □or Mo□nt□n□ t□□ V□□□□□□r□□n□□□□ □nd L□n□r L□□□r□ □
□□□□r□ □□ □□t□□□□or □□n□tr□t□n□ t□□ V□□□□□L□n□r □or □IU □□pport□ 9
□□□□r□ □□ □on□□pt □A □□□□□□oor □on□□□□r□t□on 1□
□□□□r□ 7□ □ro□nd□□t□r □r□□n□□□, □□□□no□t□□□□p□n□ □t t□□ V□□□□□□□oor 11
□□□□r□ □□ Un□r□pp□d E□□□□□t□on □□□□□□Int□r□□tt□nt □r□□n□□□□ □□□□□no□t□ 1□
□□□□r□ 9□ □□□□□□ □t□o□t□□ V□□□□□□r□□n□□□□ □on□□pt 13
□□□□r□ 1□□ V□□□□□L□n□r □onn□□t□on to V□□□□□□r□□n□□□□ M□□n 1□
□□□□r□ 11□ T□p□□□□ □□□□□□t□on □nd □□□□ □tr□□□□□□n□□on□o□□on□□pt □□ 1□
□□□□r□ 1□□ T□p□□□□ □□□□□□t□on o□□on□□pt □□, □□t□ □o□r L□□□r□ 1□
□□□□r□ 13□ □on□□pt □□ □□□□□□oor □on□□□□r□t□on 19
□□□□r□ 1□□ E□t□rn□□□r□□□□r□ □□p□□□t□□or V□r□□n□ V□□□□□□□ □□□T□□□□n□□□□ □□
□□□□r□ 1□□ □□□□□□□r□o□□on□□pt □o□t□ □3
□□□□r□ 1□□ □□□□d□□□ □□r□t□on□ □or O□□r□□□, V□□□□□□□ L□n□r □on□tr□□t□on □□

List of Tables

T□□□□ 1□ V□□□□□□□□□□ □tr□□□□□□n□□on□ □
T□□□□ □□ □on□r□t□ □nd □t□□□□ □□nt□t□□□ □or □□□□□□□□□T□□□□n□□□□□ □3
T□□□□ 3□ E□t□rn□□□r□□□□r□ □□p□□□t□ □or □□□□V□□□□□□□□□T□□□□n□□□□□ □□
T□□□□ □□ □□nd□d□t□ L□n□r □rod□□t□, M□t□r□□□□ □nd □□pp□□r□ □7
T□□□□ □□ H□□tor□□□□U□□□□ o□□□nd□d□t□ L□n□r□ □□
T□□□□ □□ □□□□□□t□d L□□□□□□ R□t□□T□ro□□□□□□□o□□□□r□n□ L□n□r 31
T□□□□ 7□ □□□□□□□r□o□L□□□□□T□□t□n□ 31
T□□□□ 7□ Add□t□on□□M□t□r□□□□Und□r□o□n□ L□□□□□T□□t□n□ 3□

T□□□□ □□ □ont□n□□n□□R□n□□B□□□d on □□d□□n□ □□
T□□□□ 9□ □ont□n□□n□□V□□□□B□□□d on R□□□R□□□□t□r □□
T□□□□ 9□ □on□□pt □o□t□, 3□ □□1□U□ □o□□□r□ □3
T□□□□ 1□□ □on□□pt □□□□d□□□ □□□ □ □r□ □□

Appendix A—LBNE Water Containment Vessel Design Criteria

Appendix B—Cost Detail Tables

Appendix C—Gantt Chart Schedules

Appendix D—Liner Material Properties

Appendix E—Risk Register

LBNE Water Containment Vessel Phase 2 Report

Introduction

Document Purpose

This report describes the conceptualization, design, cost, schedule and risk activities conducted during Phase 2 of our assessment of the Long Baseline Neutrino Experiment water containment vessel. The overall work was conducted from January thru December 2010. A report describing Phase 1 activities was issued in July 2010. Phase 1 included a charette session to identify preferred alternatives from the concepts developed. This report contains selected Phase 1 work product pertinent to the vessel concepts carried over to Phase 2, plus new work product from Phase 2.

The design team, working under the direction of the Physical Sciences Laboratory of the University of Wisconsin, consisted of CNA Consulting Engineers, Simpson Gumpertz and Heger and Hatch Mott MacDonald.

Terminology

Following are definitions of selected terms used in this report:

- Vessel—the vessel is the structure that resists the water pressures.
- Liner—the liner is the impermeable membrane that contains the ultra-pure water. The liner typically has little or no structure capacity.
- Integrated-with-the-Rock Vessel—Vessel cast against or backfilled against the cavern walls, or liner applied directly to cavern wall
- Neat line—a line inside which no rock, shotcrete or rockbolts are permitted. The thickness from the neat line to the inner surface is the minimum design thickness of an integrated-with-the-rock (IWR) vessel

Topics not Addressed

The following topics are not addressed in this work:

- Integration of the vessel with the upper deck and structure
- Physics instrumentation, including PMT's
- Integration with any plumbing/piping, or mechanical work, except for the capture and drainage of groundwater and vessel water
- Excavation, backfill or removal of spoils
- Sitework
- Ancillary facilities to the tank construction
- Ladders, portals, bulkheads or doors
- Sloped floor and vessel drain system (groundwater and ultrapure water collection and piping systems are described)

Units

Both metric and imperial units are used in this report. Metric units are used for input dimensions defining the vessel size, and in vessel component thicknesses. The design and costing work was conducted in imperial units—these have generally been left in imperial units to match the backup documentation.

Contents

This report:

- Describes vessel **Design Criteria** with most details provided in an Appendix
- Presents the **Vessel Concepts** studied in Phase 2, including vessel wall and floor sections, and waterproofing and drainage concepts
- Describes the process of **Vessel Design** and describes the capacities and quantities for five vessel wall thicknesses
- Describes vessel **Liner Concepts** options, including the wide range of polymer liners that may be used
- Presents **Constructability, Risk, Cost, Schedule** information for two of the five vessel wall thicknesses
- Provides **Recommendations**

Five appendices provide: LBNE Water Containment Vessel Design Criteria, Cost Detail Tables, Gantt Chart Schedules, Liner Material Properties, Historic Usage Information, and Leach Testing Results.

Design Criteria

Vessel design criteria are listed in **Appendix A**. The design criteria cover the following topics:

- Design Responsibility
- Design Interface Issues
- Design Codes
- Material Standards
- Design Values—including dead loads, live loads, internal pressure, external pressure, earthquake loads, water sloshing, placement tolerances, allowable deflections, and service life
- Rock and Groundwater Conditions—including rock properties, excavation conditions, expected short- and long-term deflections and groundwater inflow and pressures
- Functional Requirements—including dimensions and volume, vessel wall, vessel floor, liner, overall dimensions, and leak water collection

Some items in the design criteria were unresolved during Phase 2, and must be resolved in later design phases.

Vessel Concepts

Concepts Recommended in Phase 1

The preferred concept recommended in the Phase 1 report was Concept 2A, an integrated-with-rock concept with a cast-in-place concrete vessel. Concept 2A may have either a polymer or stainless steel liner. The technical assessment of liner options for physics

compatibility had not matured enough to permit confident selection of a liner technology. Concept 2A was developed in Phase 2 with approximately 70 percent of the effort, as planned at the conclusion of Phase 1.

In Phase 1, the recommended secondary concept was Concept 1E, a stand-alone steel vessel. Concept 1E may have either a polymer or stainless steel liner. Early in Phase 2, the Physical Sciences Laboratory directed that Concept 2C should be developed with 30-percent level of effort and no resources used to advance Concept 1E. Concept 2C is an integrated-with-the-rock concept with no concrete vessel, with the liner-drainage layer placed against the shotcreted cavern wall. Because of the roughness of the shotcreted wall, Concept 2C accommodates only a polymer liner.

Baseline Vessel Dimensions

Figure 1 illustrates the baseline vessel dimensions used for Phase 2. These dimensions are different than used in Phase 1. The key dimensions are the vessel height, from top of base slab to top of vessel, of 63 meters ((207 ft); and the cavern neat line diameter of 55 meters (180 ft). In Phase 1, the neat line diameter was determined by establishing the fiducial volume diameter and working outward through the required component dimensions to the neat line diameter. Hence, the neat line diameter was different for every concept. In Phase 2, the neat line diameter was fixed at 55 meters and the fiducial volume diameter was determined by working inward through the required component dimensions. Hence, in Phase 2, the concepts have different fiducial volume diameters.

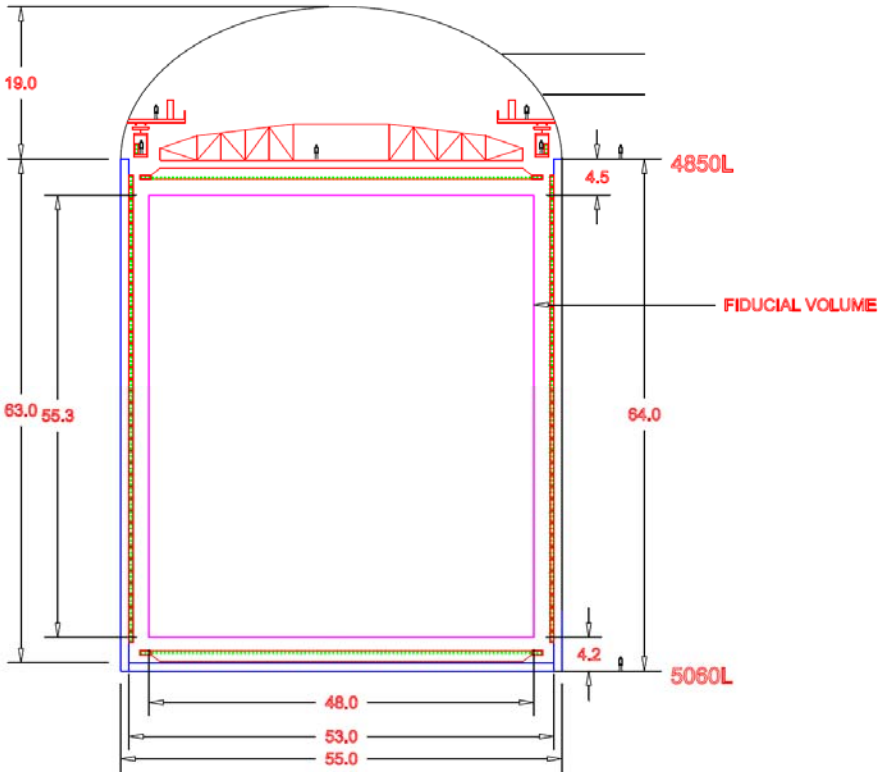

Figure 1—Baseline Vessel Dimensions

Table 1 lists the vessel diametral dimensions of Concepts 2A and 2C. For Concept 2A, a range is listed for four dimensions, because the vessel thickness may vary in thickness from 0.3 meters to 1.0 meters. Design calculations and cost estimating were done for several vessel dimensions within this range, and specific values are listed below in those sections. For

Concept 2C, which does not have a concrete vessel, only one diameter is listed for each column. Concept 2C produces a greater fiducial diameter than Concept 2A.

Table 1—Vessel Diametral Dimensions

Concept ID	Fiducial Diameter (m)	PMT Face Diameter (m)	Liner Inside Face Diameter (m)	Vessel Inside Face Diameter (m)	Mag Field Coils Inside Face Diameter (m)	Neat Line Diameter (m)	Average Shotcrete Face Diameter (m)
2A	48.0-49.4	52.0-53.4	53.0-54.2	53.0-54.2	54.8	55.0	55.5
2C	49.8	53.8	54.8	54.8	54.8	55.0	55.5

The rightmost column of Table 1 lists the average shotcrete face diameter used throughout this study. This diameter establishes the amount of concrete required outside the neat line. The average shotcrete diameter listed (55.5 m) is based on information provided by Golder Associates, the DUSEL excavation designer. Their best estimate is that the final shotcrete surface will be from 0 inches to 21 inches outside the neat line, and averaging 10.5 inches outside the neat line. The value of 10.5 inches was converted to metric and rounded down to 0.25 meters thickness.

Concept 2A

□o□pon□nt□

Figure 2 illustrates Concept 2A, a cast-in-place concrete vessel. The concrete vessel is placed between the as-built, irregular shotcrete surface left by the excavation contractor and a vertical cylindrical surface with the specified inside diameter (see Table 1). The table shows that the thickness of the vessel may range from 0.3 meters to 1.0 meters (12 inches to 39 inches). The vessel is reinforced with a single or double layer of reinforcing steel. Additional design information may be found in section **Vessel Design** on page 19.

Concept 2A includes three water control measures. As necessary, rock drainage measures will be applied to the rock surface prior to shotcrete application. These measures would be installed by the excavation contractor to control water flows at the source, and to facilitate shotcrete placement. Design and specification of this measure would be by the excavation designer.

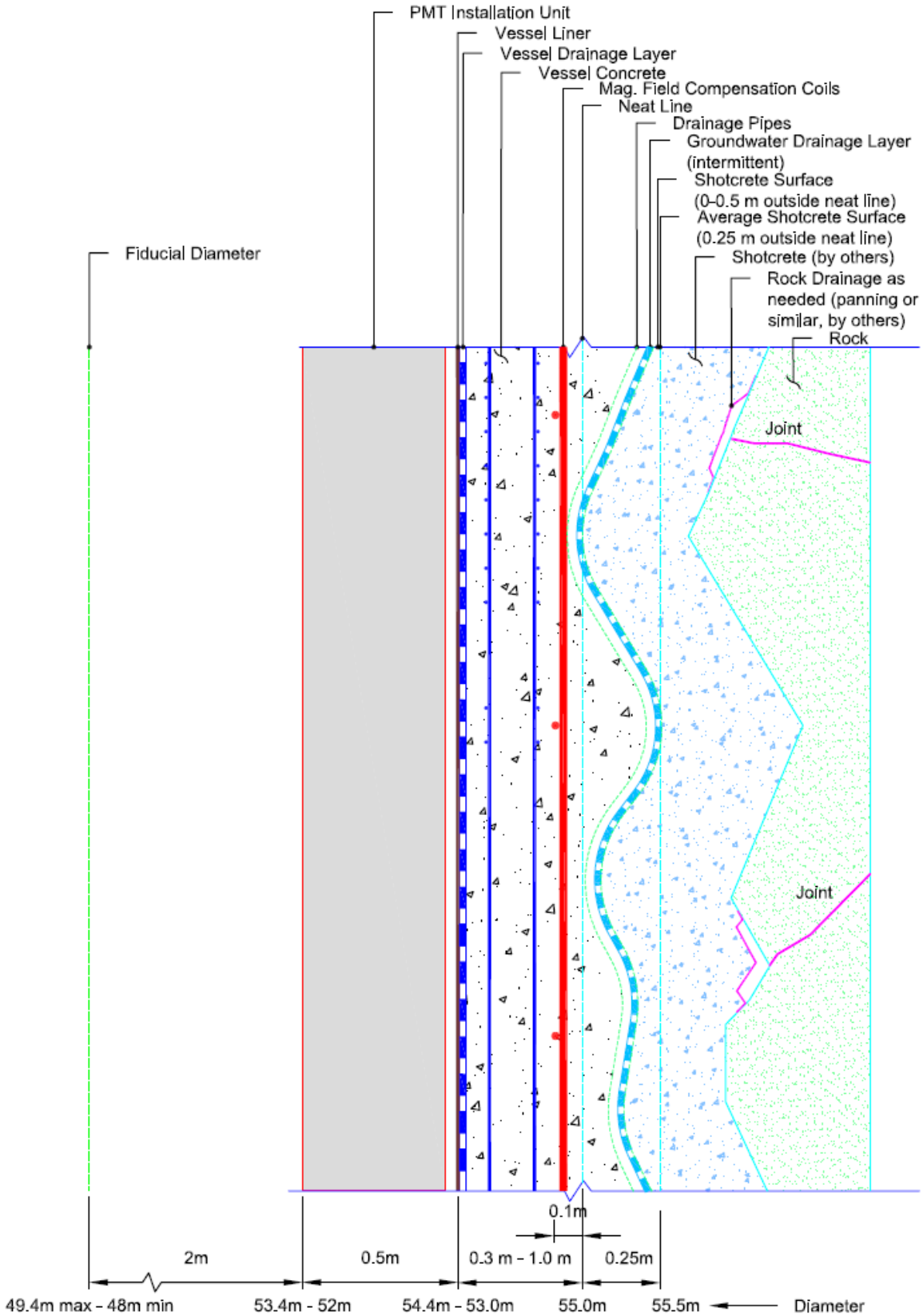

Figure 2—Typical Wall Section and Diametral Dimensions of Concept 2A

The second water control measure is placed on the shotcrete surface to control water pressures on the exterior of the vessel and channel flow to drainage mains and sumps. Because stiff contact with the stiff shotcrete and rock wall of the excavation contributes to vessel stability, the second drainage layer consists of vertical strips of dimple board wrapped in filter fabric. The design provides for a 0.3-m wide vertical strip of dimple board approximately every 1 meter on center. These dimple board strips, roughly 15 mm to 25 mm thick, are shown in vertical section in Figure 2, where the intermittent nature cannot be seen, and in horizontal section in Figure 3, where the individual strips may be seen.

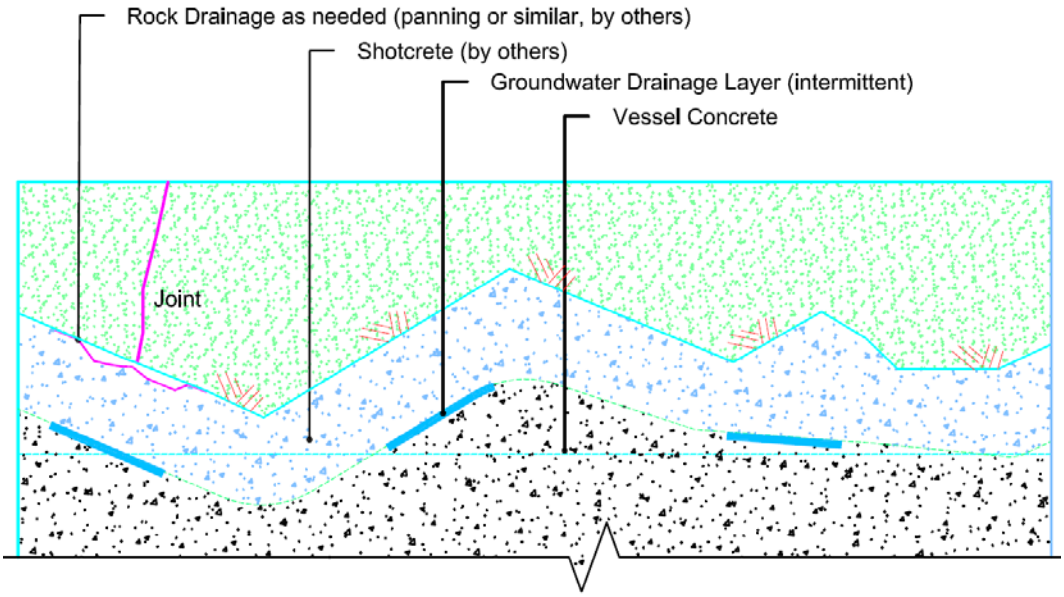

Figure 3—Horizontal Section Illustrating Second, Intermittent Drainage

Concept 2A does not have a waterproofing membrane between the groundwater drainage layer and the vessel drainage layer. Only the four-layer Concept 2C provides this separation layer.

The third, innermost drainage layer (labeled as the vessel drainage layer in Figure 2) is a continuous placement of a drainage fabric or mesh on the inside face of the concrete vessel prior to liner placement. The vessel liner is placed last and will be in contact with the ultrapure water. This liner may consist of either stainless steel or polymer. Refer to section **Liner Concepts** on page 26 for a discussion of the liner materials.

If the vessel liner is polymer, this drainage layer is likely to be placed in long, vertical rolls consisting of a nonwoven geotextile. If the vessel liner is stainless steel sheets, this drainage layer may be either a nonwoven geotextile or a stainless-steel wire mesh. In either case, the drainage material must have adequate strength and stiffness against squeezing to maintain adequate drainage when subjected to vessel water pressure.

The vessel consists of a single-pass concrete structure. This is a change from Phase 1, when a two-pass concrete placement sequence was envisioned because of the need to fill large overbreak. However, the DUSEL vessel design group has since established the design criterion that the average shotcrete face diameter is only 0.25 meters outside the neat line (ranging from zero to 0.5 meters, see Table 1 and the associated text). The resulting concrete thickness does not require a two-pass placement.

All intermittent drainage and cleanout pipes, reinforcing steel, vessel instrumentation, magnetic field compensation coils, concrete embeds, etc. will be placed between the shotcrete surface and the concrete form.

Figure 2 also illustrates selected components placed inside the vessel. The figure shows magnetic field compensation coils and reinforcing bars. Not shown but required are:

- Instrumentation and cabling for monitoring the excavation, water presence and pressure in the drainage layers and any physics instrumentation
- Cabling for the magnetic field compensation coils
- Vessel piping

Details of the vessel concrete thickness and reinforcing steel requirements are discussed in the section **Vessel Design**.

Liner Mounting and Attachment

The vessel liner will most likely be attached to the vessel wall after the wall is placed. This section illustrates two possible drainage and liner mounting details. PIU units, mast climbers, piping and other items must be attached to the vessel wall after placement of the vessel liner and drainage. Water collected in the intermittent and vessel drainage layer must be drained to a sump, and there must be provision for cleaning out these systems to maintain open flow. The vessel floor must also be lined and drained.

Figure 4 illustrates two methods for attaching the vessel drainage layer and vessel liner to the concrete wall of the vessel. Both methods use a hardened anchor nail, a stainless steel washer and a flexible disk. In the left detail in Figure 4, the vessel drainage layer is placed first, and anchored to the vessel wall by power-nailing the nail-washer-disk assembly through the drainage layer. The vessel liner is placed next and the liner is welded to the disk. This method does not penetrate the vessel liner, an advantage, but locating and welding to the disk can be difficult. The method illustrated on the right is similar, except both the drainage layer and liner are placed first, then the nail-washer-disk assembly is power-nailed through both the drainage and liner layers. This method penetrates the liner, so the final step is to weld the boundary of the disk, and to cover the washer and nail head with a weld bead. This method eliminates searching for the disk and welding blindly, but does penetrate the liner. Both methods are standard approaches widely used in the membrane industry.

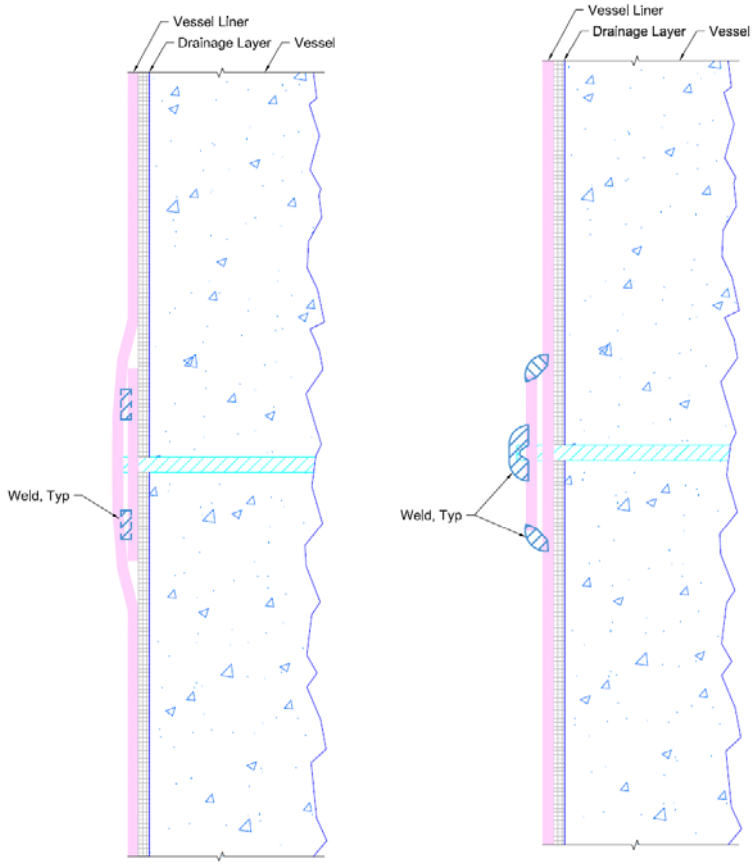

Figure 4—Two Methods for Mounting the Vessel Drainage and Liner Layers

Figure 5 illustrates a possible detail for penetrating and sealing a polymer vessel liner with a PIU support rod. Such penetrations are susceptible to leakage because the liner is breached. On the order of 5000 penetrations may be necessary, so significant preconstruction testing of the seal is warranted, as are construction quality control and quality assurance activities.

The detail might be used for PIU support rods installed either prior to or after placement of the drainage layer and the vessel liner. In either case, the penetration would be sealed with a custom-made "boot," a top hat-shaped piece of the same polymer. The PIU support rod would be caulked with structural sealant, the boot slipped on the rod and pushed to the base of the rod, the clamp would be installed, and the two circular welds made, creating a void for quality control pressure testing of the welds.

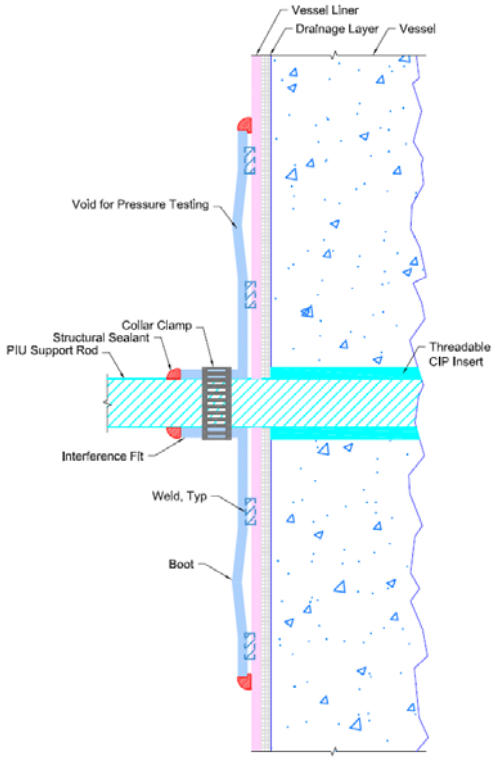

Figure 5—Detail for Penetrating the Vessel Liner for PIU Supports

Loads on the support rods, and tolerances on the location and orientation of the rods have not been established. When these are established, changes may be necessary to the support rod mounting and waterproofing detail, particularly to provide additional location and orientation tolerance. The waterproofing industry has numerous similar details for providing structural support through a waterproofing layer.

This detail is applicable for other structural connections between the vessel and internal components, like mast climbers, piping, etc. Each would need to be designed for the specific design criteria of the component including loads and deflections. These other attachments are thought to be a small fraction of the 5000 or so required for PIU mounting.

Vessel Floor Construction

The vessel floor is constructed on a cast-in-place mud slab placed by the excavation contractor. The perimeter of the vessel floor will have an embedded groundwater collection system taking the flow from the “Rock Drainage” system shown in Figure 2. The details of this groundwater collection system are undeveloped, and will depend upon the amount and flow rate of groundwater encountered during construction. This system may or may not be incorporated into the intermittent groundwater drainage system.

Figure 6 illustrates the wall-floor layout for Concept 2A. This section describes the structural, waterproofing and peripheral components shown in the figure. The drainage mains and cleanouts are discussed in section **Drainage and Cleanouts**.

A likely construction sequence for the wall-floor components is:

- Place the intermittent groundwater drainage layer and cleanout pipes on the wall

- Place the intermittent groundwater drainage layer on the mud slab
- Remove mud slab and shotcrete in wall-floor corner, place the high-capacity base drain and the groundwater drainage main, backfill the drainage main
- Place the floor reinforcing bars and magnetic field compensation coils on the mud slab
- Pour the floor slab
- Place the wall reinforcing bars and magnetic field compensation coils
- Place the vessel wall via slipforming
- Place the drainage layer and vessel liner on the vessel wall and floor
- Place all the required structural connections through the liner
- Place the vessel liner drainage main and supports

The required reinforcing bars are discussed in section **Structural Design of Concept 2A**. The magnetic field compensation coils are insulated conductors roughly 1-inch in diameter. The methods used to mount the coils prior to placing the concrete will depend upon the roughness of the shotcrete surface, and the acceptable irregularity of the coil geometry. The coils may be attached to the reinforcing bar cage, or could be hung from J-hooks attached to structural attachments like shown in Figure 5.

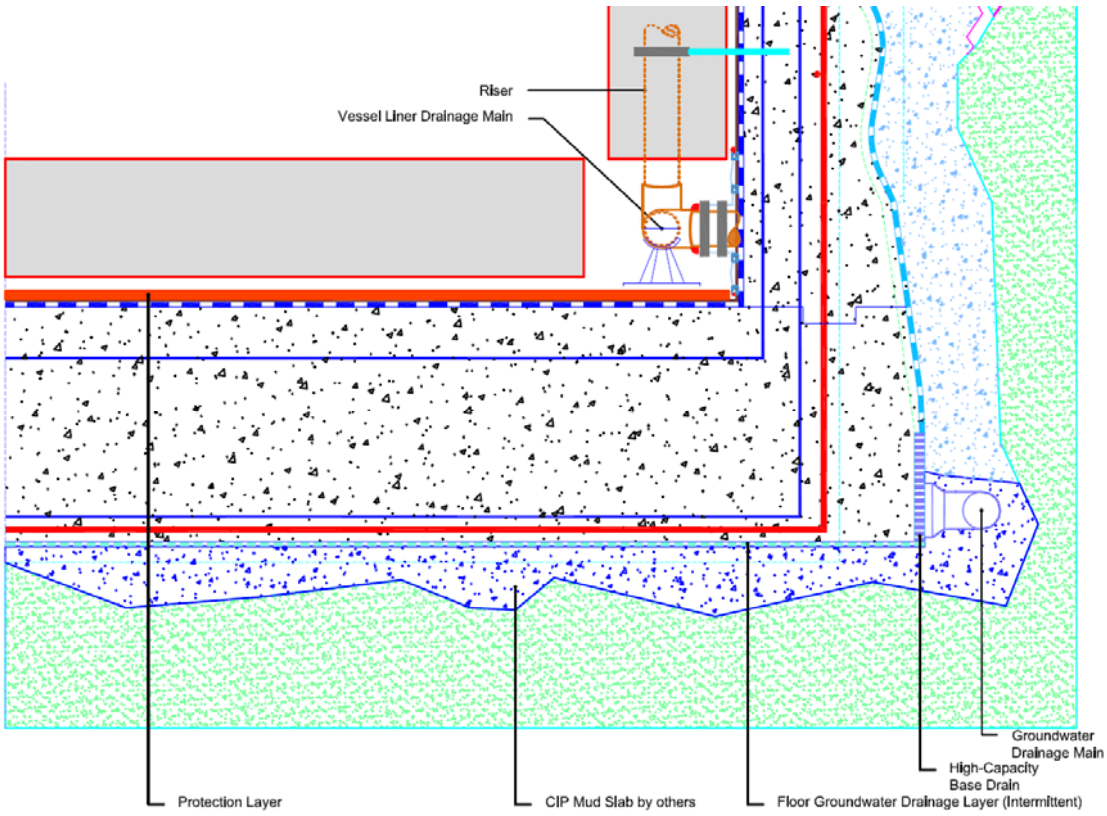

Figure 6—Concept 2A Wall-Floor Configuration

□r□n□□□ □nd □□□no□t□

Two functional requirements are critical to performance of the drainage systems. First, the drainage systems for groundwater and vessel water should be separate. Separation permits understanding the groundwater inflow and vessel leakage and facilitates containment and

treatment of vessel water should vessel water additives be used. Second, the groundwater system must have cleanouts for free drainage and to prevent buildup of external water pressure. The inter-relationship between groundwater flow, blockage of the groundwater drain system and external pressure on the vessel is discussed in section **External Pressure Considerations**.

Figure 7 is an elevation view of the groundwater drainage system at the base of the vessel wall shown in Figure 6. The intermittent groundwater drainage layer, as described above, is a strip drain placed vertically on the irregular shotcrete wall, with the drainage side facing the shotcrete and the impermeable side facing the concrete vessel. (A variation would be to use two-sided strip drains—this would require filter material fine enough to keep out concrete paste.) The strip drains would be approximately 1-ft wide and be spaced 3-ft on center.

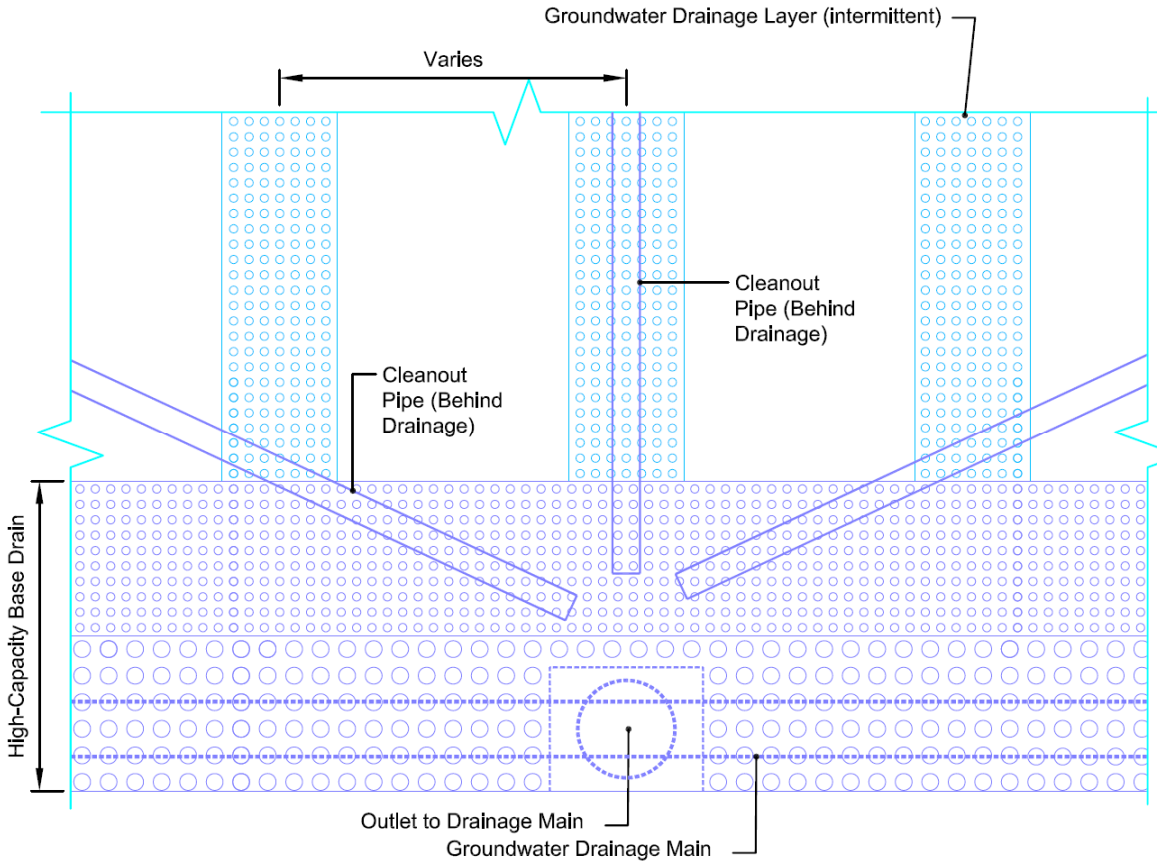

Figure 7—Groundwater Drainage, Cleanouts & Piping at the Vessel Floor

The strip drains terminate at the vessel floor in a high-capacity base drain. The base drain is wider and thicker than the vertical strip drains. Unlike strip drains, both sides of the base drain would be permeable (and covered by filter fabric.) The base drain would carry flow laterally to a drainage main encircling the entire vessel (see Figure 6). The number of outlets to the drainage main, and the capacity of the drainage main would be matched to the groundwater flow rate.

Figure 7 illustrates a trio of cleanout pipes converging at the base drain in the vicinity of the drainage main outlet. These cleanout pipes would be placed behind the strip drains, against the shotcrete, and would be perforated. These cleanout pipes would extend from the top to the bottom of the vessel. The top would be accessible to permit cleanout gear to be placed into the pipes and run down to the bottom, flushing and cleaning the pipes and the adjacent strip

drains. The vertical cleanout pipes would also be accessible for pumping out groundwater from the top of the vessel, and serve to limit the maximum head at their location.

These cleanout pipes collect groundwater at each crossing of the vertical strip drains and provide additional flow capacity to the bottom of the vessel.

Figure 8 illustrates the vertical strip drains and the cleanout pipe arrays. The figure is an unwrapped view of the entire vessel wall, more or fewer cleanout pipes may be used if appropriate for the conditions encountered. This example has eight vertical cleanout pipes, eight inclined cleanout pipes running clockwise around the vessel, and eight inclined cleanout pipes running counter clockwise around the vessel.

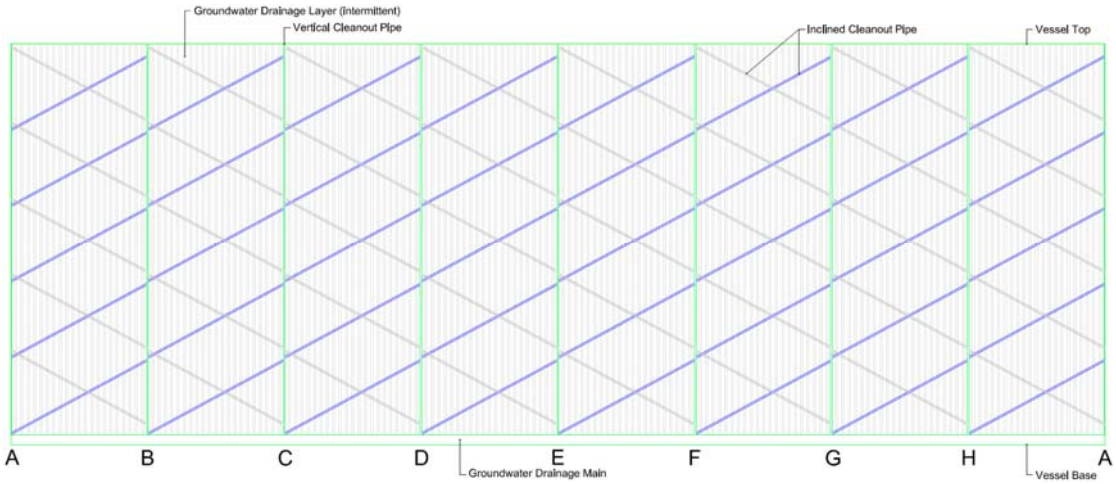

Figure 8—Unwrapped Excavation Wall w/ Intermittent Drainage & Cleanouts

Figure 9 is an exaggerated schematic of the vessel, groundwater drainage and vessel water drainage concept. The eight locations A through H in both Figure 8 and Figure 9 are the outlets from the base drain to the groundwater drainage main (closeup in Figure 7). Figure 9 shows just one of the inclined cleanout pipes, for clarity. The inclined cleanout shown starts at the top of the vessel at location B, wraps clockwise downward to the vessel base and ends at location G. The cleanout pipes would not connect at crossings, so no tees, angles or elbows would be used.

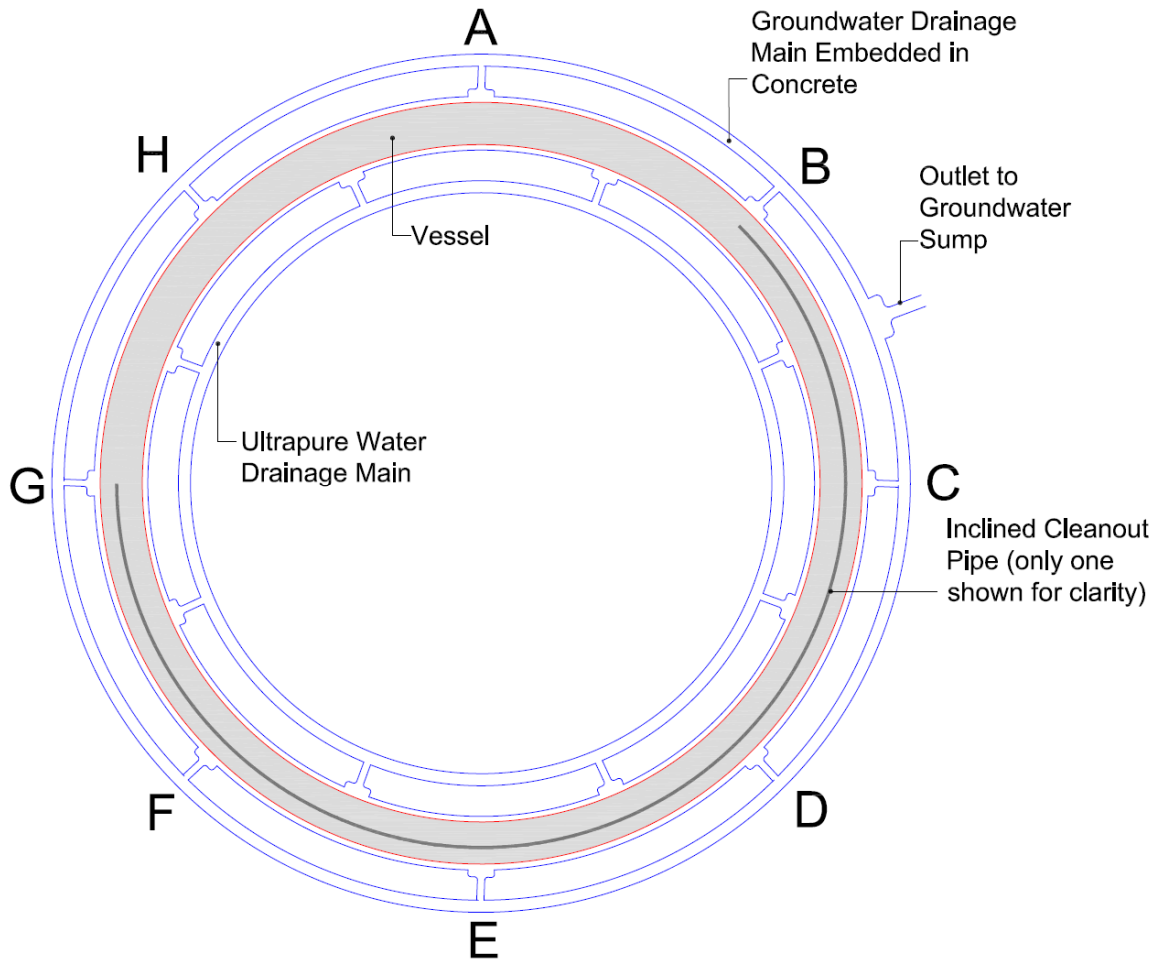

Figure 9—Schematic of the Vessel Drainage Concept

Figure 6 shows a vessel liner drainage main mounted inside the vessel. Figure 9 also shows a schematic of this drainage main. Figure 10 is a detail of how this main and the associated riser pipes would be placed and mounted. From a water containment perspective, there are significant advantages to placing the main and riser pipes inside the vessel. Both preparing a leak-proof connection between the vessel liner and the mains, and routing the pipes to an accessible location are easier if the main and risers are inside the vessel. However, if this location is not acceptable or if suitable submersible pumps resistant to the ultrapure water are not available, routing the main to a sump inside the vessel is possible.

The detail in Figure 9 for the drainage main penetration of the vessel liner is essentially identical to the structural connection illustrated in Figure 5. The connection is created by cutting a hole in the vessel liner, inserting the pipe into the boot, sealing with collar clamps and welding the boot to the liner.

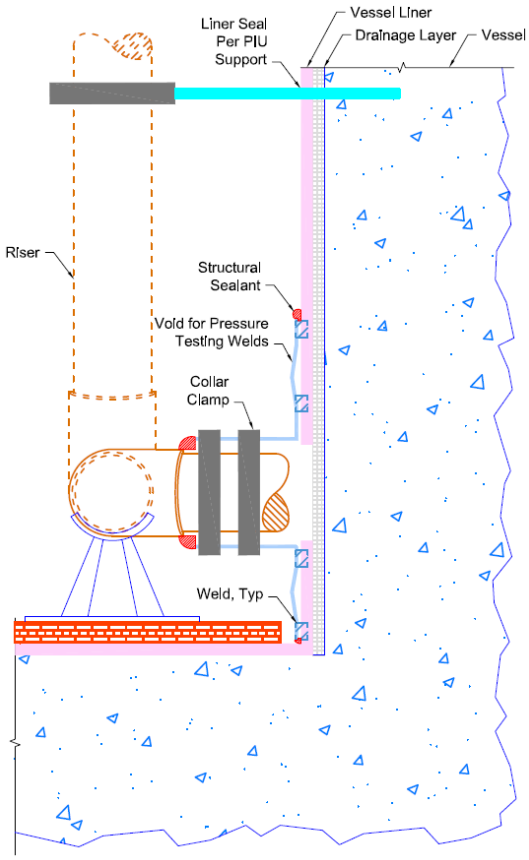

Figure 10—Vessel Liner Connection to Vessel Drainage Main

Concept 2C

Concept 2C is similar to Concept 2A, except there is no concrete vessel. The vessel liner and drainage layer are placed directly against the shotcrete surface left by the excavation contractor. Because the shotcrete surface is irregular, Concept 2C precludes the use of a stainless steel liner which could not conform to the surface. Significant cost savings occur because the concrete vessel is eliminated. However, there are functional and risk considerations that offset the cost savings. These considerations are addressed in later sections.

□o□pon□nt□

Figure 11 illustrates Concept 2C, a cast-in-place concrete vessel. Because there is no concrete vessel, the diametrical dimensions are different than Concept 2A. Table 1 lists the dimensions for both concepts. An allowance of 0.1 m is provided for the magnetic field compensation coils, but the vessel thickness is eliminated. Hence, the fiducial diameter of Concept 2C may be significantly greater than Concept 2A.

Concept 2C, as illustrated in Figure 11, provides only two water control measures. As necessary, rock drainage measures will be applied to the rock surface prior to shotcrete application. These measures would be installed by the excavation contractor to control water flows at the source, and to facilitate shotcrete placement. Design and specification of this measure would be by the excavation designer.

The second water control measure, like in Concept 2A, is placed on the shotcrete surface. Unlike Concept 2A, however, there is no third water control measure. The drainage layer between the vessel liner and the shotcrete must carry flow from both groundwater and from

the vessel. This layer is labeled as intermittent in Figure 11, but may be either intermittent or continuous, depending on the liner materials and the anticipated flows. If the layer is intermittent, the design would be similar to Concept 2A which provides for a 0.3-m vertical strip of dimple board every 1 meter on center. These dimple board strips are shown in vertical section in Figure 2, where the intermittent nature cannot be seen, and in horizontal section in Figure 3, where the individual strips may be seen.

This drainage layer may also be a continuous placement of a drainage fabric on the inside face of the concrete vessel prior to liner placement. If continuous, this layer is likely to be placed in long, vertical rolls consisting of a nonwoven geotextile. This drainage material must have adequate strength and stiffness against squeezing to maintain adequate drainage when subjected to vessel water pressure.

The vessel liner is placed inside the second drainage layer. This liner will consist of polymer sheets. Refer to section **Liner Concepts** on page 26 for a discussion of the liner materials.

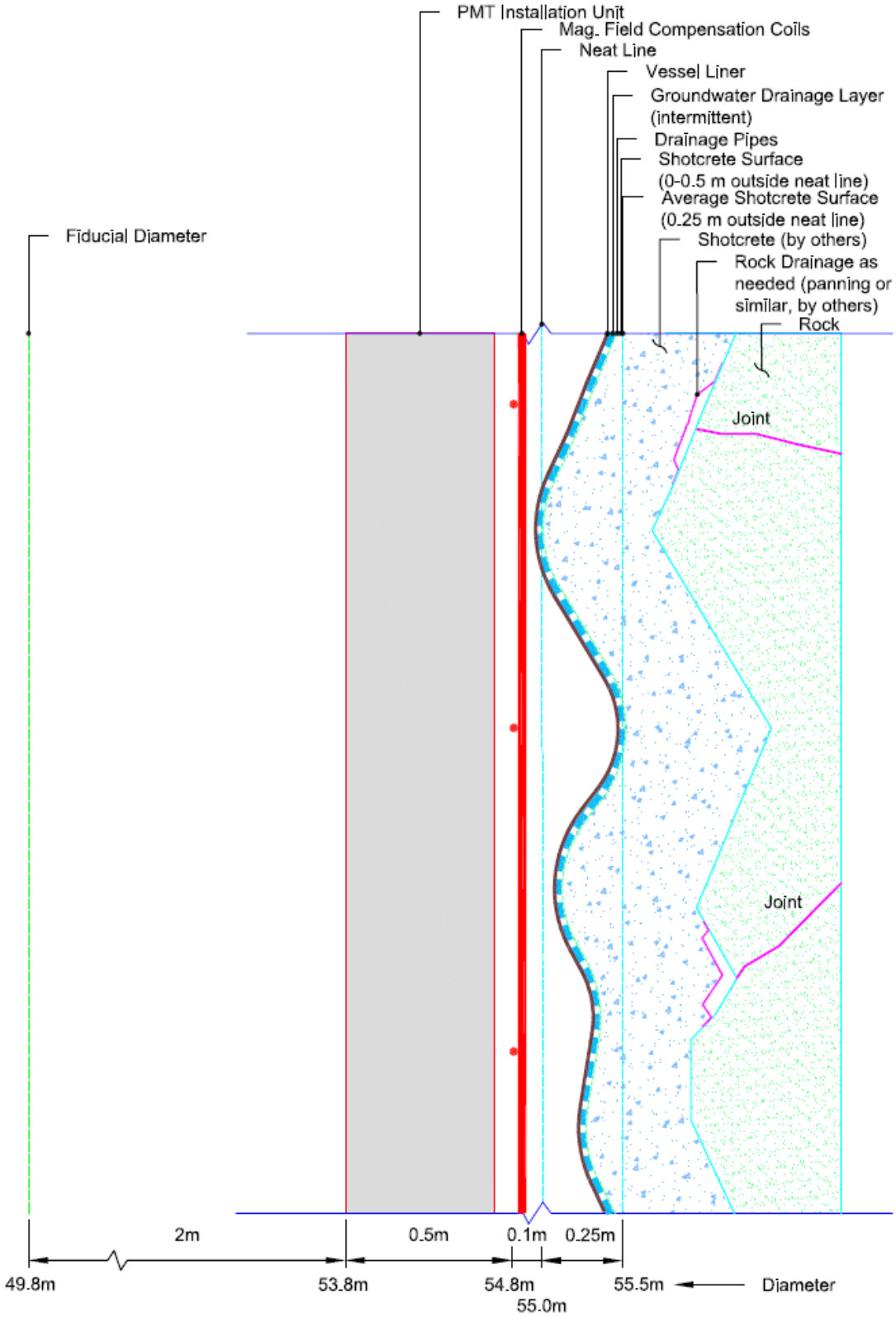

Figure 11—Typical Wall Section and Diametral Dimensions of Concept 2C

A four-layer vessel drainage and waterproofing system is also possible, as illustrated in Figure 12. The four layers would consist of:

- An intermittent or continuous drainage layer placed against the shotcrete
- A polymer membrane (similar or identical to the vessel liner membrane of the two-layer Concept 2C) placed over the first drainage layer
- A continuous drainage layer, similar or identical to the continuous drainage layer of two-layer Concept 2C
- A second polymer vessel liner membrane identical to the vessel liner membrane of the two-layer Concept 2C

The four-layer system provides separation between the groundwater and vessel water drainage systems, using a waterproofing membrane. This functionality is not provided by either Concept 2A or the two-layer Concept 2C.

Structural penetrations, piping penetrations, mounting details and drainage details would be essentially the same as for Concept 2A.

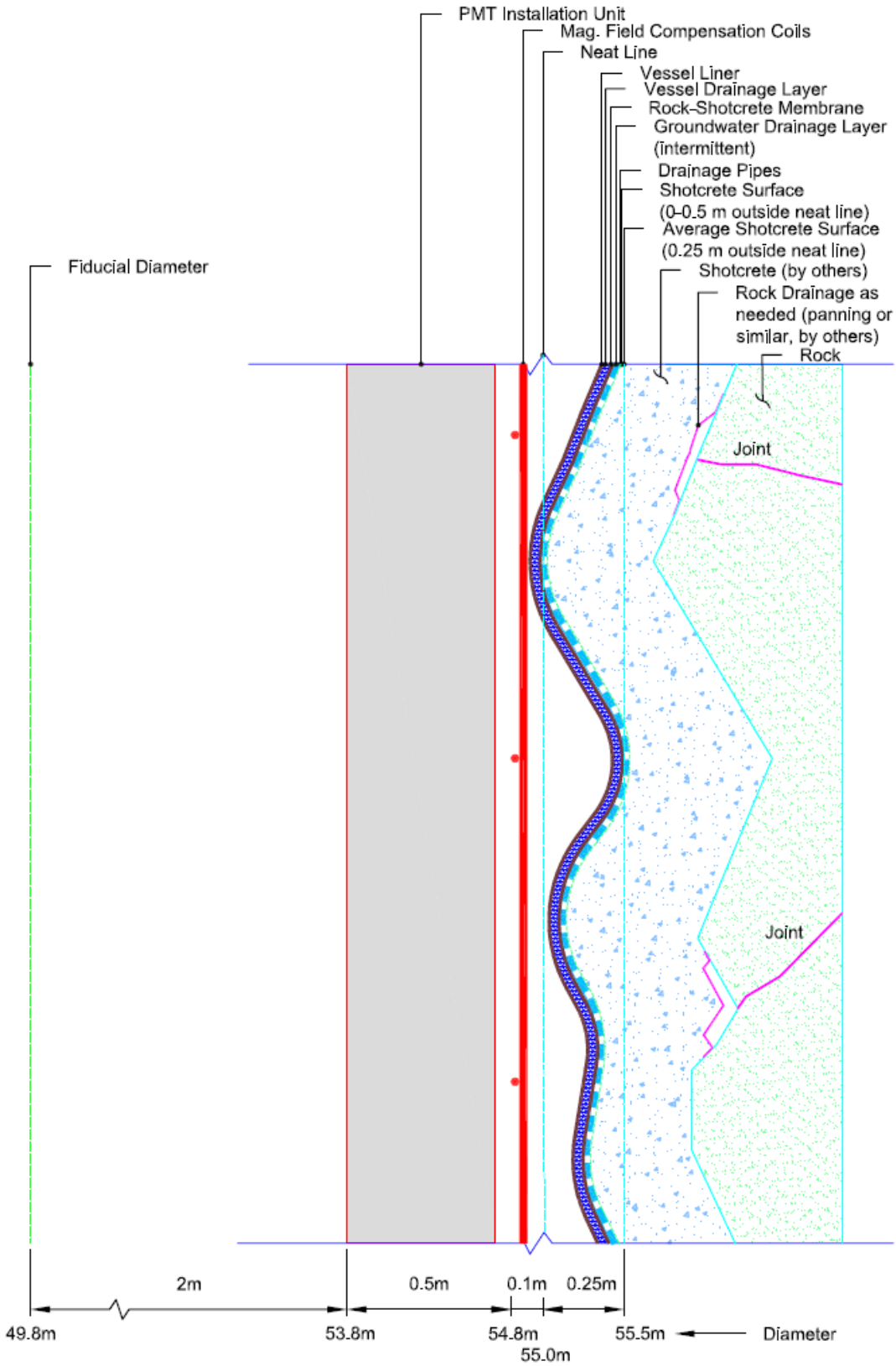

Figure 12—Typical Wall Section of Concept 2C, with Four Layers

Floor Construction

The vessel floor is constructed on a cast-in-place mud slab placed by the excavation contractor. The perimeter of the vessel floor will have a groundwater collection system to collect the flow from the "Rock Drainage" system shown in Figure 2. The details of this groundwater collection system are not developed, and will depend upon the amount and flow rate of groundwater encountered during construction. This system may or may not be incorporated into the vessel groundwater drainage system.

Figure 13 illustrates the wall-floor layout for Concept 2C. The components, construction sequence, drainage and cleanouts are similar to the wall-floor layout of Concept 2A.

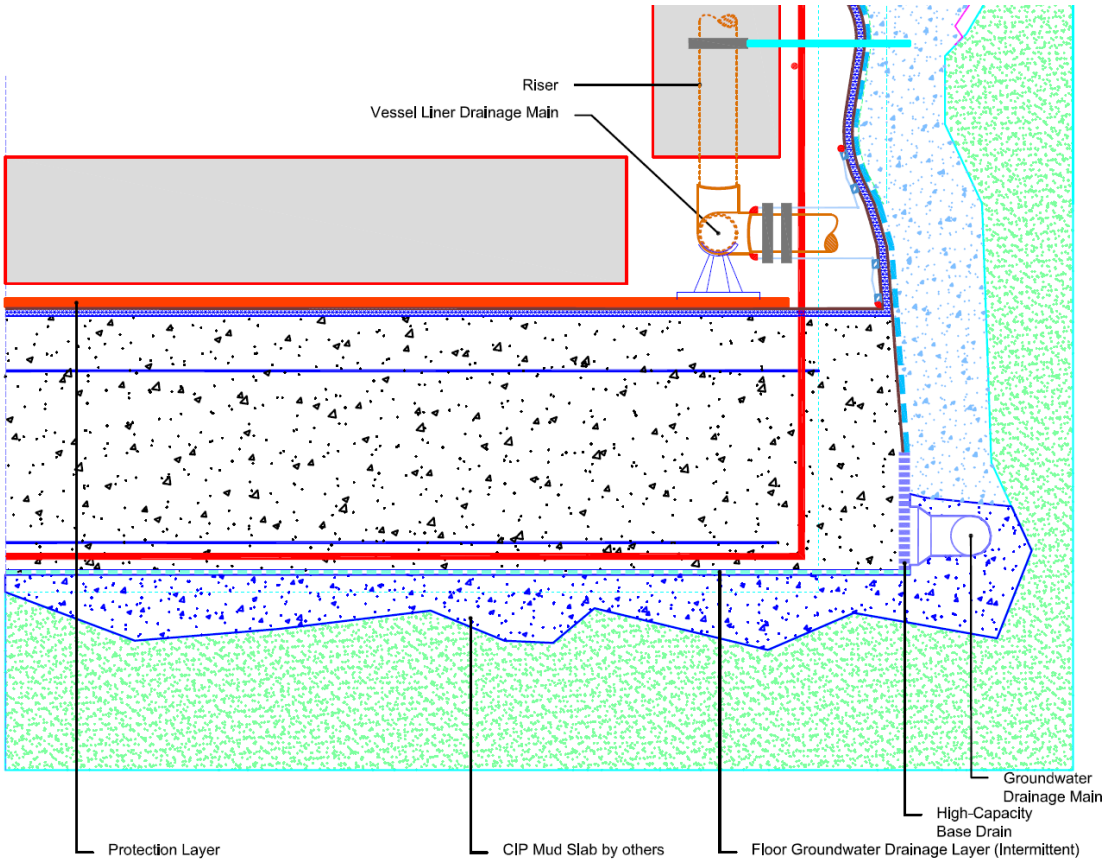

Figure 13—Concept 2C Wall-Floor Configuration

Vessel Design

Design Loads Summary

The vessel concepts are designed for loads described below:

- Self-weight—The concrete wall design is based on normal weight concrete of 150 pcf.
- Water—Internal pressure on the wall is based on a contained water weight of 62.4 pcf. The outside surface of the vessel wall is considered free of water pressure.
- Seismic loading—The design seismic accelerations are in accordance with the 2003 International Building Code which references ASCE 7-05 "Minimum Design Loads for Buildings and Other Structures". The design

team applied an Occupancy Category IV, Table 1-1 of ASCE 7-05, because of the high value of the detectors that the vessel will contain. Table 11.5-1 prescribes an Importance Factor of 1.5 for Occupancy Category IV structures. In absence of information regarding the properties of the cavern rock, the Site Class is taken as Class C corresponding to soft rock with a shear wave velocity between 1200 and 2500 ft/s. (This assumption will be reconsidered in the next phase of design, using the rock mass properties estimated for large cavern design.) The ground motion maps for 0.2 s and 1.0 s spectral response acceleration together with the Site Coefficients in Tables 11.4-1 and 11.4-2 establish the design response spectrum with S_{DS} = 0.128g and S_{D1} = 0.05g. The impulsive and convective actions of the contained water during an earthquake are in accordance with ACI 350.3-06 "Seismic Design of Liquid-Containing Concrete Structures and Commentary."

- Air Pressure Variation—The vessel wall is designed for a variation of air pressure in the cavern of ±2.8 in. H_2O.
- Peripheral structures—The vessel wall is considered to be free of any interaction with the cover of the vessel, the deck, the piping and all other ancillaries.
- PMT's and support structures—At the current stage of design, the vessel is considered to be free of any interaction with the PMT's and related support structures (PIU). In the next design phase, interaction between the vessel wall and these items will be considered.

Design Methodology

Design of Concepts 2A is based on ACI 350-06 "Code Requirements for Environmental Engineering Concrete Structures and Commentary", ACI 350.3-06 "Seismic Design of Liquid-Containing Concrete Structures and Commentary", and the recommendations of ACI 373 "Design and Construction of Circular Prestressed Concrete Structures with Circumferential Tendons." The design methodology according to these Codes and Standard is:

- Calculate the hoop tensile force due to the outward thrust of the water pressure based on membrane theory of shells.
- Calculate the prestress level required to resist the tensile hoop force plus 200 psi residual hoop compression stress after the vessel is filled.
- Calculate the required thickness of the concrete wall so that the prestress level in the wall does not exceed 55 percent of the concrete compression strength.
- Calculate the amount of prestressing required based on a jack load of 65 percent of the ultimate strength of the prestressing strand and taking into consideration loss of prestress due to friction between the strand and the duct, slip of wedges at the tendon anchorage during load transfer from jack to anchor, and long-term loss due to relaxation of strand and creep of concrete.
- Calculate seismic forces and moments of the impulsive and convective action of the water in accordance with the two-mass model of ACI 350.3.
- Determine the number of strands of the base restraint cables, for the selected strand spacing, required to resist the seismic base shear calculated above.
- Calculate the tangential stiffness of the restraint cables and the rubber pad at the base of the wall.

- Calculate the period of vibration of the vessel using the tangential stiffness calculated above and the sum of the impulsive weight of the water and the self-weight of the wall.
- Calculate the sloshing height of the water in accordance with ACI 350.3.
- Provide the percentage of reinforcing steel in accordance with the recommendations of ACI 373.

Structural Design of Concept 2A

Component and Load

The vessel wall in Concept 2A consists, in sequence from the inside surface of the vessel wall to the cavern, of the following components, shown in Figure 2:

- The liner.
- The liner drainage layer.
- Reinforced concrete wall.
- Magnetic coils.
- Unreinforced filler concrete.
- The intermittent groundwater drainage layer.
- Shotcrete, applied by the excavation contractor, and considered part of the cavern.
- Rock wall of the cavern

We designed the vessel wall for the following specified loads:

- Contained water pressure of 89.5 psi corresponding to a depth of water of 63 m.
- Gas pressure of 14.7 psi in addition to the contained water pressure.[1]
- Photomultiplier tube installation unit (PIU) loading of 15 psf of wall surface area.
- Seismic acceleration of the impulsive part of the contained water of 0.128g in accordance with IBC 2003.

Design Basis

We considered the components of the vessel wall to have the following structural actions in resisting the outward thrust of the contained water and the gas pressure, the acceleration of the water during an earthquake, and the forces applied to the vessel wall by the PIUs:

- The liner transmits radial pressure and develops hoop tension.
- The drainage layer transmits radial pressure without developing hoop tension.
- The reinforced concrete transmits radial pressure and develops hoop tension.
- The magnetic cables are nonstructural.

[1] This value is much greater than the expected cover blanket pressurization of 4 psf. The larger pressure was used in error, but had a negligible impact on the design.

- The unreinforced concrete can be expected to be cracked (from temperature and shrinkage straining) and transmits radial pressure without developing hoop tension.
- The intermittent drainage layer next to the shotcrete transmits radial pressure without developing hoop tension.
- The cavern wall transmits radial pressure and develops hoop tension.

We used the following stiffnesses for the components of the vessel wall and cavern in our structural analysis:

- Liner: high density polyethylene (HDPE), 100 mil thick, long-term (20 year) elastic modulus E = 40,000 psi. Stainless steel liner, 28 Ga (0.0149 in. thick) E = 28,000,000 psi.
- Drainage layer: American Wick Drain Corporation, SiteDrain Sheet DS-450 Series (Core), E = 190,000 psi from the stress/strain curves shown on the data sheet.
- Concrete vessel wall and concrete filler E = 3,600,000 psi.
- Cavern: E = 9,800,000 psi. We also analyzed the vessel wall using our earlier estimate of E = 5,000,000 psi.

Thickness Option

We evaluated the structural adequacy of the reinforced concrete vessel wall with five thicknesses (all thicknesses are from the face of the liner to the neat line):

- 5-inch wall thickness: the minimum thickness that forms the surface to which the liner and the liner drainage layer can be applied and that can contain a single curtain of vertical and circumferential reinforcing bars with adequate covers.
- 10-inch wall thickness: minimum thickness that can contain reinforcing curtains next to both the inside and the outside faces of the vessel wall with adequate covers.
- 14-inch wall thickness: the thickness that fills the radial space considered by the design team to be an average thickness available for the vessel wall.
- 28-inch wall thickness: double the thickness that fills the radial space.
- 36-inch wall thickness: the maximum thickness that may be available for the vessel wall.

Analysis based on compatible radial deflections of the structural components of the vessel wall shows that:

- Pressure resistance and the developed hoop tension of the liner are negligible. This conclusion holds for the stainless steel and HDPE liners, the four vessel wall thicknesses, and the two elastic moduli of the cavern analyzed.
- The 36-inch thick reinforced concrete wall resists less than 5% of the total applied pressure when the elastic modulus of the cavern is 5 million psi. Thinner vessel walls and a stiffer cavern resist less than 5% of the pressure and, therefore, develop less hoop force than the 36-inch thick wall.
- Most of the pressure is resisted by the cavern.

The analysis results indicate the following effects on the design of the vessel wall:

- A liner of stainless steel or HDPE with a reasonable thickness, say less than 1/8 in, is structurally adequate. Furthermore, since the liner material at this time has not been selected, liner selection can be expected to be weakly, or perhaps not at all, affected by structural requirements.
- The hoop force demand in the reinforced concrete vessel wall, for all thicknesses considered, can be met by the minimum reinforcing requirement in ACI 350 which is 0.5% in each direction.

The designs are summarized in Table 2. Additional notes about the designs listed in the table are:

- Concrete volume (vessel face to neat line) does not include filler concrete described below.
- Filler concrete, from neat line to average shotcrete surface, is 3,600 cy.
- Reinforcing quantity includes:
  - Doubling of reinforcement over bottom 6 ft of wall.
  - A circumferential bar for each PIU for anchoring embeds.
  - An allowance for splices.
- Materials are 4,000 psi concrete and ASTM A615 Grade 60 reinforcing.

Table 2—Concrete and Steel Quantities for Five Wall Thicknesses

Nominal Wall Thickness (vessel face to neat line) (in)	Concrete Volume (vessel face to neat line) (cy)	Concrete Volume (total) (cy)	Reinforcing Steel (description)	Reinforcing Steel (tons)
5	1810	5410	#5 at 12" central, ea. dir.	149
10	3620	7220	#5 at 12" ea. face, ea. dir.	285
14	5060	8660	#6 at 12" ea. face, ea. dir.	413
28	10120	13720	#6 at 6” ea. face, ea. dir.	808
36	13000	16600	#7 at 6" ea. face, ea. dir.	1140

The vessel wall thicknesses listed in Table 2 cover a wide range, from the minimum thickness necessary to accommodate one layer of reinforcing steel, to the maximum thickness that would fit into the thickness allowances. All options are designed for the fundamental design load from internal water containment, gas pressure and seismic action.

In the absence of any other design consideration, the minimum thickness option of 5-inch walls thickness, that has the minimum amount of concrete and steel, would be the preferred thickness. However, the minimum thickness vessel has very limited capacity to resist external pressures.

E□t□rn□□□r□□□r□ □on□d□r□t□on□

Anticipated Pressures

The groundwater pressures that may load the vessel externally are complex and uncertain for the current level of site investigation and geotechnical assessment. Plausible estimates range from the full depth head of 4850 ft[2] (about 2100 psi) to zero (due to low flow and a perfectly functional drain system). Pressure measurements in the cased, valved and shutoff exploration

[2] David Vardimon, DUSEL project team, personal communication, 2010.

holes at the 4850 level range from zero to 1200 psi[3]. The zero values occur in holes D and J and are suggested to be due to dewatering and pressure relief from nearby drifts. The 1200-psi value is the long-term maximum projected for hole N. The initial flow rates for holes 3A, M, N and J are 0.11, 0.063, 0.04 and 0.006 gpm, respectively.

Preliminary vessel buckling calculations for external pressure suggested that the buckling limit is a few tens of psi for the nominal vessel thickness on the order of 10 to 15 inches. There is a one to two order of magnitude difference between uncontrolled groundwater pressures (1200 to 2100 psi) and vessel pressure limits (say 10 to 30 psi) . Hence, groundwater drainage that controls pressures on the vessel is an essential component of short- and long-term vessel performance.

Pressure Limits for Buckling and Compression

Additional external pressure limits were calculated for two failure mechanisms and two factor of safety values. The calculations are based on:

- Buckling of the vessel wall due to external pressure with the vessel empty is based on an equation due to Windenburg and Triling[4]. The buckled shape consists of a number of circumferential lobes that depend on ratios of thickness to diameter and diameter to length ratios and the elastic modulus. The theory agrees well with tests with little scatter in the test results. Buckling due to external pressure is not strongly imperfection sensitive and can be controlled by limiting out of roundness at the time of construction. The calculated theoretical buckling pressure corresponds to a factor of safety of 1.0.
- Design factor of safety for buckling. Since buckling due to external pressure is not imperfection sensitive, a factor of safety of the same magnitude as used for elastic buckling of columns, 1.9, is appropriate. We used a factor of safety for buckling of the vessel wall of 2.0.
- Compression strength of concrete wall due to external pressure. The thrust in the vessel wall is equal to the pressure times the radius. Factor of safety for concrete compression. Concrete compressive strength with a factor of safety of 1.0 corresponds to a load factor of 1.0 and resistance factor of 1.0
- Design factor of safety for compression. Compression strength is computed with a load factor of 1.4 and resistance factor of 0.6 in conformance with ACI 350, ACI 372 and concrete strength of 4000 psi. The resistance factor is a measure of uncertainty in concrete strength. This is equivalent to a factor of safety of 1.4/0.6 = 2.33.

Table 3 lists the resulting external pressure capacities, for an empty vessel. Buckling-based pressures are listed for the standard design buckling factor of safety of 2, and also for a factor of safety of 1. Compression-based pressures are listed for a standard design factor of safety of 2.33 (load factor of 1.4, resistance factor of 0.6) and also for a factor of safety of 1 (load factor of 1.0, resistance factor of 1.0). For both buckling and compression, the factor of safety of 1 case represents the pressure that is, on average, likely to cause vessel collapse.

Table 3—External Pressure Capacity for Five Vessel Wall Thicknesses

Nominal Wall Thickness (in)	External Pressure Capacity Due to	External Pressure Capacity Due to	External Pressure Capacity Due to	External Pressure Capacity Due to

[3] Stetler, L.D. Pressure Buildup Characteristics in Drill Holes on the 4850-ft Level at DUSEL Homestake, 2010.

[4] D.F. Windenburg and C. Trilling, “Collapse by Instability of Thin Cylindrical Shells Under External Pressure”, Trans., ASME, 11, pp 819-825, 1934

	Buckling (FS=2) (psi)	Buckling (FS=1) (psi)	Compression (FS=2.33) (psi)	Compression (FS=1) (psi)
5	1	2	7	16
10	6	12	13	31
14	14	28	19	44
28	84	166	38	88
36	148	296	49	113

Figure 14 illustrates the values listed in Table 3. For vessel nominal thicknesses below about 17 inches, buckling is the controlling mechanism. For thicker vessels, behavior is controlled by compression.

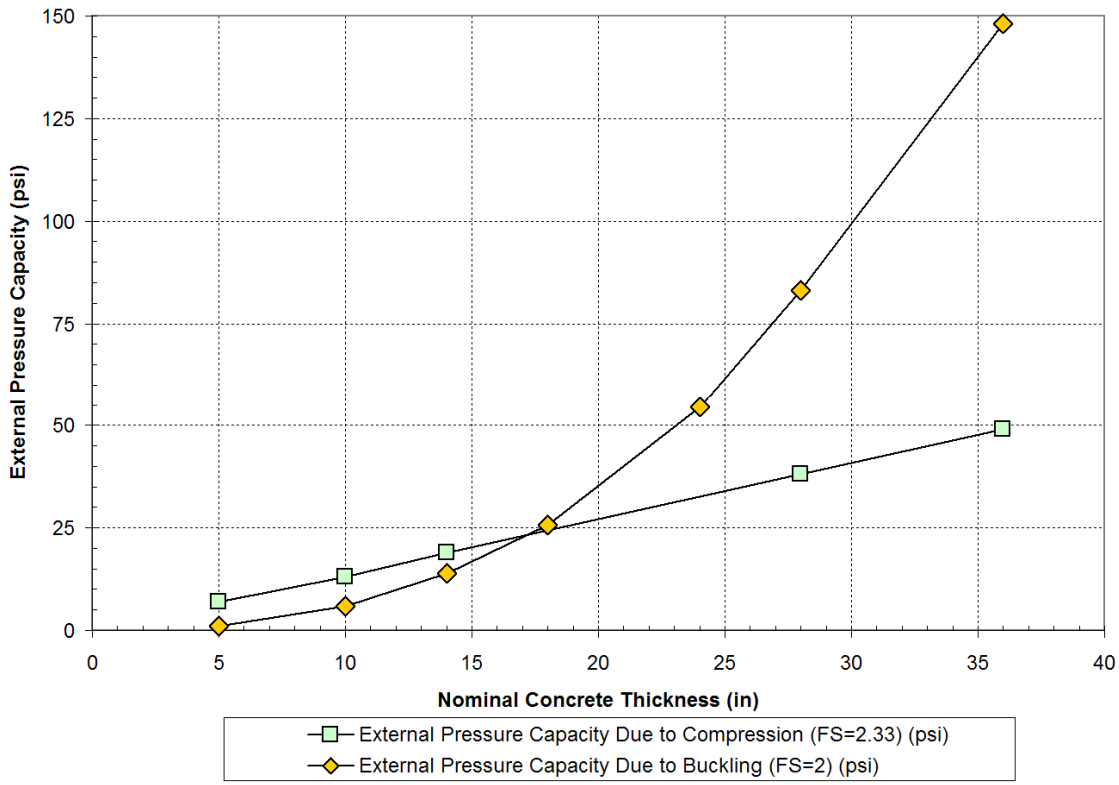

Figure 14—External Pressure Capacity for Varying Vessel Wall Thickness

Pressures and Behavior in Service

The external pressure design calculations are founded on simplifying assumptions that may or may not be met by vessel service conditions. The calculations are for a circumferentially uniform hydrostatic external pressure, while actual pressures are likely to occur in limited patches associated with wet joints in the rock.

The vessel wall may not be in intimate contact with the cavern shotcrete because the wall may shrink away from the shotcrete. For 600 microstrain shrinkage, a value that the tank industry uses, and poor adhesion to the cavern wall, the gap that would open between the wall and shotcrete would be about 15 mm. This gap would permit the vessel wall to buckle. However, because the cavern wall would limit the amplitude of the buckle, the vessel wall may have additional external pressure capacity but also induce bending in the wall. In other words, if the adhesion is poor, the vessel wall can buckle but it probably has some post buckling strength. If the vessel wall does not shrink or the adhesion strength is so strong that it can restrain the shrinkage strain, the vessel wall will not buckle. For a given shrinkage strain, demand on

adhesion strength, commonly known as bond strength or pull off strength, increases with vessel wall thickness. Therefore, thicker walls are more likely to buckle than thinner walls, if this mechanism is dominant.

If blockage of the drainage systems were not an issue, external groundwater pressures would be controlled to near zero. However, preliminary assessment of the groundwater chemistry at the 4850 level shows that iron does precipitate out of the water.[5] The precipitation rate is uncertain, and so the preferred means of removing precipitate is also uncertain. However, the vessel drainage design has a cleanout system for flushing the drains.

If groundwater pressures do act on the vessel, these pressures are likely to spread out and create large pressure patches that asymptote to a circumferentially uniform hydrostatic pressure. However, the extent and shape of the pressure patch spreading is uncertain—one mechanism may cause the pressure patch to spread upward, and another may cause the patch to spread downward. Consider that a plugged drainage strip produces a pressure patch of a certain size and location behind the vessel wall. The pressure, if sufficient, will cause deflection of the vessel, opening up a flow path for water. If the wall-floor connection is stiff, the vessel stiffness near the floor will decrease from bottom toward the top, and the water will preferentially flow upward. This reasoning suggests that pressure patches will spread upward. The hydrostatic pressure in the enlarged patch would be zero at the top of the vessel and about 90 psi at the bottom. However, some pressure head would be necessary to drive flow, so the actual pressure would be greater. In contrast, the pressure head would always increase with depth. This would argue for downward water flow and the downward spread of pressure patches. Pressure patches in the upper part of the vessel may behave differently from pressure patches in the lower part of the vessel.

The next phase of design will require computer-based structural analysis. Because of the issues raised in the preceding paragraphs, modeling the combined rock-vessel-water system is a complex endeavor, and is beyond the scope of this design phase. A comprehensive model would require coupled pressure-flow capabilities, nonlinear interfaces between the vessel and the rock, continuum elements for the rock, structural elements for the vessel, the ability to model shrinkage and the ability to solve the nonlinear physical problem.

Liner Concepts

The water containment vessel must be lined. The task of the liner is to limit leakage out of the vessel and prevent the concrete or steel from leaching into and changing the light attenuation properties of the ultra pure water. The liner needs to be resistant to attack and leaching from the ultra pure water.

Liner Types and Materials

We evaluated three general categories of liner material—polymer sheets, cold fluid applied materials, and stainless steel sheets. Each is described briefly below. Specific products are listed in Table 4.

□o□□ □r □□□□t L□n□r□

Polymer sheet liners are flexible sheet membranes commonly used as a waterproofing, roofing, or tank liner material. They are appropriate for both Concepts 2A and 2C. Typical membrane thickness is 90 mils or less. Most sheets appropriate for this project would have an internal scrim reinforcement that usually consists of polypropylene or fiberglass. Two general types of polymer sheets are being considered:

[5] Tessa Jones, personal communication, 2010.

- Thermoplastic sheets, with seams that are heat welded and do not require adhesives or tapes
- Elastomeric sheet, with seams sealed with adhesives or tapes.

Cold Fluid-Applied Membranes

Cold fluid-applied membranes are usually one or two component liquids that cure after application. These products may be appropriate for the free-standing steel vessel, but may not be appropriate for the IWR concrete vessel concept. The thickness varies depending on the particular membrane system. There are numerous manufacturers of this type of membrane, each with their own chemical makeup. Common types are epoxies, urethanes, and polyureas. Epoxies are rigid and can crack with movement. Urethanes can flex and elongate with movement. Typical uses are industrial coatings for corrosion protection, below-grade structure waterproofing, potable and wastewater structures, chemical containment, and cooling towers.

The potential difficulty with cold fluid-applied membranes and the IWR concrete vessel is applying the material over the drainage layer. This technology is typically applied to rigid surfaces, not to flexible drainage layers.

Stainless Steel

Stainless steel is an appropriate liner material and was used at Super-K. Many industrial tanks are built of stainless steel. We are not familiar with other examples (besides Super-K) where a thin stainless steel liner is incorporated with a concrete vessel.

Type 304 stainless steel is the baseline material in the current concept and cost estimate, using 1/8-inch thick sheets. Other stainless steel types may have a better combination of corrosion resistance, constructability and cost. For example, 316L is more corrosion resistant and has lower carbon to improve weldability.

Impurities

All material types will need to be checked for impurities that can leach into the water, degrade the material, or corrode. For example, past experience with stainless steel showed that some contain zinc and other impurities that can rust.[6]

Table 4—Candidate Liner Products, Materials and Suppliers

Product	General Description	Specific Material	Supplier
Coolguard	Thermoplastic	KEE Elvaloy	Cooley Engineered Membranes
Coolpro	Thermoplastic	polypropylene	
Coolthane	Thermoplastic	ether-based urethane	
Sure Seal Butyl	Elastomeric	Isobutylene/isoprene	Carlysle Coatings
Sherflex	Cold fluid applied	polyurethane	Sherwin Williams
Envirolastic AR-520 PW	Cold fluid applied	polyurea	
Dura-Plate UHS	Cold fluid applied	epoxy	
Various products	Cold fluid applied	polyurethane	C.I.M. Industries
Primer 91-H20 Hydro-Zinc	Cold fluid applied	polyurethane	Tnemec Inc.
Finish N69 Hi-Build Epoxoline II	Cold fluid applied	epoxy	
n.a.	Stainless steel	Stainless steel	Various

[6] Personal communication, Minfang Yeh, Brookhaven National Laboratory, 2010.

Work Since Phase 1 Report

The following have been completed since the Phase 1 report:

1. Expanded list of materials. We have reviewed the suitability of additional liner materials and submitted samples for leach testing.

2. Waterproofing and drainage details. Termination, connection, and penetration details have been developed.

3. Historical usage review. We reviewed projects the materials have been used for in the past.

4. Leak detection. We have reviewed leak detection techniques that can be used during installation and operation.

5. Dual purpose HDPE concrete form/liner. We have considered using HDPE sheets as both a liner and concrete form for Option 2A.

Polymer Liner Material Properties

Appendix D lists the properties of the various sheet liner materials being considered. Each property is listed according to its ASTM test method. The table is sparse because there are numerous ASTM tests for each property, and not all materials have been tested according to each method. For example, tear strength or resistance is tested according to ASTM D624, D751, D1004, and D1117. All results for these tests are included in the table.

Obviously, some mechanical properties are dependent on the liner thickness. The table includes data for the available liner thicknesses.

Minimum properties for the membrane have not been chosen at this time. The liner must be able to withstand damage from installation and operation including bending, puncture, tear, stretching, and abrasion. The properties that will be important for the chosen liner are: its tensile strength, tear resistance, toughness, ability to resist puncture, flexibility, and brittleness.

Polymer Liner Historical Usage

The liner materials proposed have been used in a wide variety of applications such as waterproofing, substrate protection, tank linings, landfill lining, and roofing. Specific uses are listed below. Past project usage information is provided in **Error! Reference source not found.**.

Table 5—Historical Usage of Candidate Liners

Membrane	Type	Waterproofing	Substrate Protection	Tank Lining	Secondary Containment	Landfill Liners	Roofing
Cooley Coolguard	thermoplastic	X	X	X	X		
Cooley Coolpro	thermoplastic	X	X	X	X		
Cooley Coolthane	thermoplastic	X	X	X	X		
Carlysle Sure Seal Butyl	elastomeric	X					X
Sherwin Williams Sherflex	cold fluid applied		X	X			
Sherwin Williams Envirolastic AR-520 PW	cold fluid applied	X	X	X	X		
Sherwin Williams Dura-	cold fluid applied		X	X	X		

Plate UHS							
CIM Industries CIM 2000	cold fluid applied	X	X	X	X		
Hyload CTEM	thermoplastic	X	X				X
GSE Lining Technology							
HD Conductive White Smooth	thermoplastic		X	X	X	X	
HD Conductive Smooth	thermoplastic	X	X	X	X	X	
HD Smooth	thermoplastic	X	X	X	X	X	
UltraFlex Textured	thermoplastic	X		X		X	
HD Textured	thermoplastic	X	X	X	X	X	
UltraFlex Smooth	thermoplastic	X		X		X	
Exxon Paxon AL55-003	thermoplastic						

Polymer Liner Service Life

The polymer liner service life is influenced by environmental factors that vary from application to application. The Geosynthetic Institute summarized the major factors as follows[7] (original text in italics):

- *Ultraviolet—occurs only when the geosynthetic is exposed*
- *Oxidation—this occurs in all polymers and is the major mechanism in polyolefins (polyethylene and polypropylene) under covered conditions.*
- *Ozone—this occurs in all polymers that are exposed to the environment. The site-specific environment is critical in this regard.*
- *Hydrolysis—this is the primary mechanism in polyesters and polyamides.*
- *Chemical—can occur in all polymers and can vary from water (least aggressive) to organic solvents (most aggressive).*
- *Radioactive—not a factor unless the polymer is exposed to radioactive materials of sufficiently high intensity to cause chain scission, e.g., high level radioactive waste materials.*
- *Biological—generally not a factor unless biologically sensitive additives (such as low molecular weight plasticizers) are included in the formulation.*
- *Stress State—a complicating factor which is site-specific and should be appropriately modeled in the incubation process.*
- *Temperature—clearly, the higher the temperature the more rapid the degradation of all of the above mechanisms; temperature is critical to lifetime and furthermore is the key to time-temperature-superposition which is the basis of the laboratory incubation methods which will be followed.*

The same white paper contains a summary of research on the "halflife" of HDPE geomembranes. In this context, the halflife is the time period that elapses before the particular material property drops to 50 percent of the original value. The results are strongly dependent upon service temperature. The results are for geomembranes not exposed to ultraviolet light. The estimated halflife is 73 years at 40 deg C, 173 years at 30 deg C and 449 years at 20 deg C.

More recent research[8] confirms the general nature of these findings:

[7] Koerner, R.M., Hsuan, Y.G., and Koerner, G.R. *Geomembrane Lifetime Prediction: Unexposed and Exposed Conditions*, GRI White Paper #6, 2005

- *it appears likely that the service life of the specific GM tested immersed in leachate is likely to exceed 700 years and will probably be of the order of 1000 years (or longer) at 20 °C, more than 150 years and likely 225–375 years at 35 °C and more than 40 years and likely 50–90 years at 50 °C.*

The baseline temperature planned for the water in the vessel is 13 deg. C. This temperature, which is less than the minimum values cited by these references, suggests a long service life for HDPE membranes.

In order to assure adequate service life, various polymer geomembranes should be tested under WCV environmental conditions.

Polymer Liner Leak Rates

□□□tor□A□□□□t□n□L□□□□□□

Case histories provide valuable insights into performance, lessons learned, and evaluation of key issues such as leakage. Leakage rates are dependent on many factors. A membrane that is designed to handle operational loads, manufactured properly and installed perfectly will not leak. Leaks occur due to:

- Manufacturing problems
- Accidental damage during shipping, installation, and operation
- Spills of incompatible materials
- Poor substrate preparation (sharp edges, corners)
- Poor seaming—for many of the materials, a properly made seam is just as strong as the material itself.
- Leaks at improperly designed or constructed penetrations
- Chemical attack during operation
- Deterioration over time

Poor seams and penetration waterproofing are the most likely cause of leaks. Thousands of penetrations are proposed. These will need to be properly designed and constructed.

L□□□□□□ R□t□□ □or L□nd□□□□, l□po□nd□ □nt□ □nd □ond□

Some of the best data on geomembrane leakage rates, both standards and measured values, is from landfills, liquid impoundments and wastewater ponds. According to information published by the Geosynthetics Institute[9], the minimum leakage rate through a perfect membrane (no flaws) ranges from 0.02 to 2.0 gallons per acre-day (gpad). This rate is due to vapor diffusion through the geomembrane and is the so-called “de minimum” leakage. For reference, the water containment vessel liner area is about 3.3 acres (counting only the walls and floor). Hence, the minimum leakage is 0.06 to 6.6 gallons per day.

Typical leakage rates from solid waste landfills, which typically limit the leachate head to 1 ft, are:

- The typical leakage rate that triggers action, 5 to 20 gpad. Typical responses are to continue monitoring and assess liquid characteristics.

---

[8]Rowe, R.K., Rimal, S. and Sangam, H. *Ageing of HDPE geomembrane exposed to air, water and leachate at different temperatures*, Geotextiles and Geomembranes, Volume 27, Issue 2, April 2009, Pages 137-151

[9] Koerner, R.M. and Koerner, J.R. *Survey of U.S. State Regulations on Allowable Leakage Rates in Liquid Impoundments and Wastewater Ponds*, GRI White Paper #15, 2009

- Typical intermediate leakage rate, 20 to 100 gpad. Actions resulting from these rates are stop adding waste and continued monitoring and testing of liquid characteristics.
- Typical rapid and large leaks, greater than 100 gpad. Actions are to remove the overlying waste and repair leaks.

The upper limit of each range extrapolates to 66 gpd and 330 gpd for the water containment vessel. However, the hydraulic head is much higher in the water containment vessel, so the same nature of flaws and leaks would produce much higher leakage rates in the vessel.

The leakage rates listed in Table 6 were calculated[10] for a single defect per acre (the permeation row has no defects). This rate of defects was recommended by those authors for design purposes. These calculations also assume that the geomembrane has very pervious media on both sides. The numbers in the table must be factored by 3.3 acres to calculate the total flow for the vessel liner. A single defect in the water containment vessel could be anywhere from near the water line to the very bottom. Hence, the leakage rates in Table 6 would be for a leak from the top to midheight of the vessel, but would underestimate the leak rate for a defect in the lower half of the vessel. The total leak rate for the vessel liner would be 3.3 times the values in the table.

Table 6—Calculated Leakage Rates Through a Geomembrane Liner

Nature of Leak	Leakage (gpad) (Head=10 ft)	Leakage (gpad) (Head=100 ft)
Permeation	10	30
Pinhole (0.004 in diam.)	1	10
Small hole (0.08 in diam.)	300	1000
Large hole (0.445 in diam.)	10000	30000

Polymer Leach Testing

Preliminary leach testing results have been obtained from Brookhaven National Laboratory. Their preliminary results as of July 2010 are listed in **Error! Reference source not found.**. A general summary of the information received is provided below (Table 7):

Table 7—Summary of Leach Testing

Membrane	Type	Comments
Cooley Coolguard	thermoplastic	Significant leaching. Pickling appears to be beneficial
Cooley Coolpro	thermoplastic	
Cooley Coolthane	thermoplastic	
Carlysle Sure Seal Butyl	elastomeric	Significant leaching. 3% - 5% absorption. Worst of the four sheet materials in current test
Sherwin Williams Sherflex	cold fluid applied	Difficulty bonding coating to stainless steel coupons. Leach testing not started yet
Sherwin Williams Envirolastic AR-520 PW	cold fluid applied	
Sherwin Williams Dura-Plate UHS	cold fluid applied	
CIM Industries CIM 2000	cold fluid applied	Difficulty bonding coating to stainless steel coupons. Leach testing not started yet

[10] Giroud, J.P. and Bonaparte, R. Leakage through Liners Constructed with Geomembranes—Part I. Geomembrane Liners, Geotextiles and Geomembranes 8, pp27-67, 1989.

The following additional liner materials have been sent for testing since completion of the Phase 1 report:

Table 8—Additional Materials Undergoing Leach Testing

Membrane	Type	Comments
Hyload CTEM	thermoplastic	Coal tar/elvaloy based
GSE Lining Technology		
–Conductive White Smooth	thermoplastic	HDPE with conductive layer for spark testing
–Conductive Smooth	thermoplastic	HDPE with conductive layer for spark testing
–HD Smooth	thermoplastic	HDPE
–UltraFlex Textured	thermoplastic	LLDPE
–HD Textured	thermoplastic	HDPE
–UltraFlex Smooth	thermoplastic	LLDPE
Exxon Paxon AL55-003	thermoplastic	HDPE, possibly dual purpose liner/concrete form

Hyper K HDPE Liner

Hank Sobel of University of California – Irvine reported in an email to Farshid Feyzi that the Hyper K project in Japan will be utilizing an HDPE liner. The liner will be pinned to the rock and concrete will be placed behind it. The technique was described as the same used for Super K except they will be using HDPE instead of stainless steel. No more details are known at this time.

Selection criteria

Normal usage vs WCV usage

Performance

Pros and cons

Environmental considerations

Quality control and quality assurance procedures

Warranty

Science considerations

Cost

Materials compatible with Option 2C

Stiff materials such as HDPE might not be acceptable

Repair procedures

(TBD)

Quality Control / Quality Assurance Methods

Ro□o□□rop□r In□t□□□t□on

Proper installation procedures should include:

- Substrate inspection and preparation. The substrate must be free of anything that could cut the liner such as sharp corners and debris. Typically, subgrade preparation techniques are specified.
- Liner installation. The liners must be installed so that they are not overstressed, do not have unnecessary folds and continuous seams. All

seams should be tested following the manufacturer's recommendations. Seam tests include: portable tensiometer testing for testing seam peel and shear strength, seam air pressure testing for testing field wedge-welded seams, vacuum box testing to test all extrusion welds, and continuous seam probing using a rounded screw driver or other blunt object.

- Post installation. The installed work must be protected from damage. Limiting access to finished areas should be enforced and protection layers should be installed.

Importance of QA

The liner materials are impermeable—significant leakage occurs only if there is an imperfection. Imperfections can be holes, cuts, tears, punctures, or poor seams. Imperfections can occur during liner manufacturing, shipping, installation, and operation. It will be important to have good quality control during all phases of the project to minimize leaks.

The manufacturer will have to have a quality control program in place to ensure that there are no pin holes or other defects. The liner materials must be properly packaged and handled during shipping and storage, typically following manufacturer's recommendations.

Installation quality control and quality assurance are the most important, because of the handling and seam welding that occurs. The reference in footnote 10 provides insight into the benefits of a good QC/QA program. The authors conclude that:

- *"A frequency of 25 holes/ha (10 holes per acre) or more is possible when quality assurance is limited to an engineer spot-checking the work done by the geomembrane installer."*
- *"An average of one defect per 10 m (30 ft) of field seam can be expected without quality assurance by an independent firm, and without adequate quality control by the geomembrane installer."*
- *"An average of one defect per 300 m (1000 ft) of field seam can be expected with reasonably good installation, adequate quality assurance (which implies adequate quality control), and repair of noted defects. (Quality assurance followed by adequate repair drastically decreases the number of seam defects but does not totally eliminate them.)"*

The authors also note that automated seam welders (becoming available that the time of their writing) would reduce the rate of defects.

Another source[11] used the following defect frequencies for risk-based assessments of leaks in landfills lined with geomembranes:

- For a site with poor QA/QC, use a geometric mean of 50 holes per acre
- For a site with good QA/QC, use a geometric mean of 1 hole per acre

The benefit of a high-quality, independent QA/QC program is obvious. Excellent construction quality assurance programs exist, see for example this site.[12]

Leak detection

Leak detection methods should be used to locate liner imperfections during and after installation. Electrical detection methods have been used successfully in the past. These include:

---

[11] Murray, G.B., McBean, E.A., and Sykes, J.F. Risk-based Engineering Design for a Landfill Leachate Collection and Liner System. GMWR (Spring) 1996

[12] http://geosynthetica.net/tech_docs/CQA/HDPE/TOC_HDPE_CQA.asp

- Conductive geomembrane spark test. This technique can be used on a membrane that has a conductive layer attached to one side. The principle of this electrical leak location method is to use a high voltage pulsed power supply to charge a capacitor formed by the underlying conductive layer, the non-conductive layer of the geomembrane and a coupling pad. The area is then swept with a test wand to locate points where the capacitor discharges through a leak. Once the system senses the discharge current, it is converted into an audible alarm. This method is appropriate when the membrane is exposed, clean, and dry.[13]
- Electric field vector mapping: The EFVM technique uses water as an electrically conductive medium; therefore, it is essential that the surface to be tested is wet. Water needs to be sprayed over the area, and the method can be used on surfaces oriented at any angle. Once the area is suitable for the test, a technician installs an un-insulated wire loop around the perimeter of the area and connects the electrical pulse generator to the wire. The electrical pulse generator delivers a 40-volt potential for one second every three seconds. The pulsating potential on the wet roof surface forms an "electrical plate." The grounded substrate is the other "electrical plate," while the membrane separating the two plates acts as the insulator. If moisture enters a breach in the membrane, an electrical contact is established between the two plates (i.e., an electrical ground). Using a potentiometer connected to two probes, the survey technician steps into the electric field and places the probes on the surface. If there is a breach in the membrane, the dial on the potentiometer will move either to the left or to the right. The technician can then follow the direction of the electric field to the membrane breach. Because of the high electrical resistance through the membrane the magnitude of the electrical current is relatively small. However the magnitude of the current is not important, because the direction of the current flow leads the technician to the breach.[14]
- Grid system. This permanent system has been developed to monitor leaks under the lined bottom and final cover of landfills. It requires an electrically conductive grid of electrodes below the liner. The leaks are located by taking potential measurement via a widely spaced grid of electrodes under the lined area. The collected data are then processed to determine the distribution of the current density that best reproduces the observed voltage data. This system is used principally as a permanent monitoring system. It cannot be used during the construction phase[15]

Inspection

Full-time inspector(s) certified by the liner manufacturer should be present to inspect all membrane, liner installation, and seams. Qualified inspectors should also conduct leak detection. Any imperfections should be repaired immediately according to project specifications and manufacturer recommendations.

Deposition/Cleanout/Water Pressure Design

Drainage systems will plug over time if the water deposits minerals or sediment so characterization of the groundwater is very important. Groundwater chemistry testing has

[13] ASTM D6747-04 Standard Guide for Selection of Techniques for Electrical Detection of Potential Leak Paths in Geomembranes
[14] Eichorn, Chris, RCI, Inc. Electric Field Vector Mapping
[15] ASTM D6747-04 Standard Guide for Selection of Techniques for Electrical Detection of Potential Leak Paths in Geomembranes

been completed on samples collected from the 4850 level. The following information has been reported[16]:

- "Iron will precipitate out of the water, based on testing from 4850.
- Most other minerals would remain dissolved.
- The water is moderately corrosive, Langelier Saturation Index (LSI) = -2.7. (Negative value = corrosive, positive = $CaCO_3$ scale can form.)
- DUSEL Corehole 3A was drilled through the large cavern and is producing groundwater.
- More speciation should be done to assess the potential deposition problem."

The vessel drainage system should be designed with closely-spaced cleanouts so that deposition can be removed periodically.

Recommended Next Phase Testing and Analysis

The following tests are recommended during the next phase:

- Leak testing of penetrations. Mockups of liner penetrations should be built and tested under the maximum anticipated groundwater pressures.
- Groundwater chemistry. More detailed groundwater chemistry testing should be done to assess the depositional characteristics to aid in drainage/cleanout design.
- Structural analysis of lining. The analysis should include:
  - Selection of required liner strength properties based on anticipated loads.
  - Design and frequency of liner/vessel and liner/shotcrete attachments.
  - Recommendation of shotcrete smoothness requirements.
- Liner Lifetime
  - Liner lifetime does require further investigation. Traditional uses of liners, for building waterproofing, underground structure waterproofing and landfills, expect performance lifetimes of many decades. However, environmental conditions like high temperatures, certain chemicals, constant loads and other site conditions may shorten the lifetime. There is no known experience with exposure to ultrapure water, so that potential impact must also be considered. There is existing test data on the more common environmental conditions. Expected conditions not covered by existing testing will need to be tested.

Constructability, Risk, Cost, Schedule

The preliminary constructability review and risk assessment exercises were completed to identify fatal flaws and provide a basis for scheduling and estimates of construction productivities and availability. The findings of these studies also formed the basis of risk and contingency allowances developed for the cost estimate.

Constructability

There are numerous constructability issues associated with the LBNE Water Containment Vessel Project. Several issues are common to both concepts and are discussed in a general

[16] Tessa Jones, personal communication

sense. Additionally, each concept has specific constructability issues that are discussed in more detail.

□□n□r□□□on□tr□□t□□□t□l□□□□□

- Equipment, material, and worker movements to (and from) the Large Cavern and availability of Ross and Yates Shafts. All concepts must be designed using equipment and materials that can be efficiently transported within the planned DUSEL facility utilizing the improved infrastructure. Further, it is understood that the shafts will be operated by DUSEL personnel and the interfaces between the water containment vessel (vessel) construction contractor at ground surface and shaft base must be addressed for efficient conveyance of equipment and materials to the Large Cavern.
- It is understood that most of the development and equipping of the DUSEL facility will be completed prior to the construction of the vessel, such that there will be no "interference" or coordination with other on-site projects or contractors. If this situation changes and other DUSEL projects are being performed concurrently with the construction of the vessel, additional constructability issues may arise.
- The Large Cavern excavation by others could be a cause of constructability challenges as the vessel will be designed to specific dimensions with tight tolerances. Excessive overbreak of the cavern wall may require additional stabilization methods such as rock bolting, shotcreting, etc., which in turn would increase the cost of stabilization (out of the scope of the vessel) and add to the quantity of backfill concrete for Concept 2A.
- The use of a polymer liner would require special precautions to prevent the material from being damaged in transit from the surface and during application. Were the polymer liner to be damaged, the integrity of the waterproof element would be compromised, leading to potential leaks and damage to the vessel and other DUSEL facilities.

□on□□pt□□p□□□□□□□on□tr□□t□□□t□l□□□□□

- A concrete slick line down the Ross shaft is part of the DUSEL baseline design. This facilitates construction of the vessel. Nevertheless, the availability of concrete, concrete transport underground and the quality of the concrete is a concern. The contractor must take special precautions to provide an efficient and reliable transit system to transport the wet concrete from the slick line to the Large Cavern. Given the quantity of concrete required for the vessel, it is possible that the concrete pour will be unexpectedly interrupted. Therefore, the design should include details for vertical and horizontal construction joints and procedures for preparation of cold joints as contingencies to mitigate the risk of delays.
- The concrete mix should be designed based on the required concrete strength and the anticipated time it will take in transit. Construction contract requirements will include trial batches of mix designs to confirm performance and compatibility of ingredients and material properties.
- The use of concrete for the vessel carries several additional constructability issues. Transporting the reinforcing steel down the shaft may require that it be slung from the hoist cage, which takes time and carries numerous safely risks. Proper placement and compaction of concrete in confined spaces with numerous embeds, several of which are likely to have close position and alignment tolerances, has the risk of honeycomb and other defects.

Risk Assessment

The scope of this preliminary risk assessment is to identify potentially significant risks for the vessel project. Project risks have been categorized into 4 sub-areas of potential risk that have been identified and assessed. Design risks include potential issues that may be encountered before, during and as a result of the vessel design process. Procurement risks are those associated with hiring the contractor and obtaining the equipment and materials necessary to construct the project as designed. Construction risks are identified as issues associated with construction activities. Performance risks include the possible effects of major design and/or construction errors. A formal Risk Register has been prepared and includes for each risk a description, potential impacts in terms of cost and schedule, and possible mitigation measures. The following is a general summary of the risk issues. Refer to the Risk Register for a complete list.

- Regulatory/Legal Permitting Risks
  - Delays related to approvals
  - Delays related to permitting
- Design/Technical Risks
  - Changes in Design Criteria
  - Inadequate analyses
  - Defective design
  - Late program changes
- Commercial/Contractual/Financial Risks
  - Contractual or funding issues
  - Schedule slippage
  - Claims exposure
  - Bids that are too high
- Logistical/Access Risks
  - Site access
  - Equipment Failures
  - Interference by other contractors or facility operations/experiments
  - Hoist availability
- Construction Risks
  - Availability of surface or underground facilities
  - Insufficient skilled labor force
  - Availability of specialty construction equipment
  - Large Cavern rock deformations
  - Inadequate design of Large Cavern crane (capacity and/or reach)
- Procurement Risks
  - Insufficient interest of qualified
  - Onerous terms and conditions, including those currently in affect for SDSTA contracts
  - Inability to negotiate and award construction contract
  - Availability of specified specialty materials

    - High commodity prices for major material components like steel or cement
- Safety and Security Risks
    - Inadequate safety plan
    - Inadequate safety training
    - Inadequate access for rescue crews
- Performance Risks
    - Excessive leakage out of vessel
    - Contamination of water in vessel
    - Groundwater buildup on the vessel wall
    - Catastrophic failure of vessel
    - Poor performance requiring excessive vessel maintenance and repairs

Based on the Risk Register, the issues with the greatest risk are:

- Insufficient geotechnical data
- Program Changes
- Evolving Design Criteria
- Interfaces with others (contractors, experiments, operations)
- Site access difficulties
- Procurement of specialty construction equipment
- Large cavern rock deformations
- Installation of compensation coils

Cost Basis

The cost estimates are based upon the contractor performing the work as detailed for each concept and as defined below. The following costing criteria applied to these cost estimates were developed in consultation with and at the direction of representatives of the University of Wisconsin and the Brookhaven National Laboratory. The cost and schedule are organized using a work breakdown structure (WBS).

- Costs are based on 3Q2010 US$ with no provisions for escalation
- No allowance for hedging of commodities or currency exchange rates
- Design & Bidding Contingency of 28 percent is used through-out. AACE (Association for the Advancement of Cost Engineering) recommends 15-30 percent for a preliminary budget estimate. HMM historically utilizes 28 percent at this level of project definition. Also, at this level of project definition, the same contingency is appropriate for all concepts.
- Risk Contingency applies primarily to unforeseen events such as those found in the risk register (i.e., hoist failure, material delays, etc.) that may adversely affect the project schedule and increase project direct and indirect costs. For all options the Risk Contingency has been calculated as 10 percent of the total construction costs excluding design & bidding contingency.
- The expected total cost of the project is the base cost plus all contingency categories.

- QA/QC testing for construction is assumed to be 10 percent of the cost of the tank liner.
- The average crew size working in the Large Cavern is 10 people and work is based on 3 shifts per day. Variations in crew size for some activities are noted below. All support workers are included in Indirect Costs (see below).
- The estimates assume approximately 1 hour per shift for safety meetings and training
- Most work will be performed on a 24/5 schedule basis, no allowance for legal holidays
- All temporary power and ventilation is existing
- The Yates shaft will be utilized for all material handling
- Optimally the material hoist should be available 24/7. A loss of efficiency of 20% has been applied to labor
- It is assumed that all materials except concrete will be transported in the cage. A slick line of sufficient capacity will be installed in the Ross shaft for concrete delivery, according to the DUSEL baseline design. No cost is included for suspending any materials underneath the cage.
- The cost of concrete buggies is included but locomotives and rail cars or other means of transport in the drifts are not included
- It is assumed that rail would be in place along the drift for transporting construction materials.
- It is assumed that there will be an overhead crane/hoisting system in place within the cavern with operation by others. Cost of the crane system and operation are not included as part of this estimate, but are included in the University of Wisconsin costs.
- Each cost item noted is broken down into labor, equipment operating, and miscellaneous cost component where applicable.
- Quantity takeoffs for the vessel have been developed from conceptual sketches dated 8/23/2010.
- Indirect costs are defined as project costs for the contractor to support and manage the work. Indirect costs include:
- Indirect labor – site project management, supervision, trades, safety and training, professionals and clerical people
- Indirect operating – include operating costs for indirect equipment rentals, site offices support costs, insurances, etc;
- Power costs estimates for each main section of work are included in indirect costs.
- For estimating purposes, all options assume a 55-meter tank diameter and 63-meter height
- The cavern floor is assumed to be stable, and a mud slab will be provided by the excavation contractor. Ground slab thickness is assumed to be 1 meter as a minimum structural element for all options.
- Work for wall areas is assumed to be done by spider cages suspended from the overhead.
- PPE equipment where applicable are included in the 'equipment' cost line item
- Installation of drainage piping and magnetic compensation coils is included.

- Sales taxes are excluded from estimate.
- Upper decking and structure are excluded from the estimate
- Permanent lighting is excluded from the estimate
- The PIU structure is excluded from the estimate
- Installation of PIU mounting rods is included. There is no detail as to material, size, or length. It is assumed the rods are 1-inch diameter stainless steel 3-ft in length.
- Photo-multiplier tubes are excluded from the estimate
- Any plumbing/piping within the tank or at the deck level is excluded from the estimate.
- All mechanical work is excluded from the estimate
- All excavation, backfill or removal of spoils is excluded from the estimate
- All sitework is excluded from the estimate
- All ancillary facilities necessary to the tank construction are excluded from the estimate
- Permanent ladders, portals or doors are excluded from the estimate
- Sloped floor and drain system are excluded from the estimate, but will be added in Phase 2
- Costs for an overhead crane are excluded from the estimate
- Magnetic field compensation wire materials and installation are included in the estimate

The following costing criteria are applied to the cost estimate for Option 2A:

- Formwork for concrete walls is calculated as a slipform system
- Primary estimate is based on utilizing a type 304 stainless steel liner system.
- Tank vessel concrete is assumed to be 10-inch or 28-inch thickness.
- Concrete void infill and 2nd layer vessel concrete pours must be continuous pours. However, work is scheduled at 5 days per week to allow for scheduled maintenance, equipment breakdowns and other delays
- Concrete work based on 4 crews and 16 cubic yards/hour placement
- Inner liner work is based on utilizing two crews of 10 people working 3 shifts, 5 days per week to reduce schedule duration

The following costing criteria are applied to the cost estimate for Option 2C:

- A 4-inch layer of leveling shotcrete is included to allow for a smoother, even substrate for liner application. In future design phases, the need for a smoother final shotcrete layer will be assessed, and if needed will be coordinated with DUSEL.
- Inner liner assumption for Option 2C is Sure Seal Butyl
- Inner liner installation is assumed to be from the top working down in lifts.
- Labor is based on two crews of 12 people working 3 shifts, 5 days per week

Schedule Basis

The estimated construction schedules were developed based on anticipated dates provided by the client, including completion dates of earlier DUSEL projects and notice to proceed. The schedules are also based on typical industry procurement periods and construction timelines

for each construction task. No allowances were made for long term interruptions in support services provided by other (e.g. electrical power and other services, ventilation, major hoist repairs, etc), weather delays, or holidays. No float was included in any of the activities or total construction duration. Future study will include a trade-off analysis of a 24/7 versus a 24/5 schedule.

Contingency Values

The cost values presented below do not include contingency. Contingency values will be applied on a line item basis by the Physical Science Laboratory when the vessel costs are combined with other subsystem costs. However, the appropriate contingency percentage should be based on the risks inherent in this type of construction.

Two approaches have been used to select contingency values for the water containment vessel: i) experience/engineering judgment, ii) based on the risk register.

E□p□r□n□□ □nd En□n□□r□n□ □□d□□ □nt□□□□d □ont□n□□n□□

A Design & Bidding Contingency of 28 percent was applied to the Phase 1 estimate. AACE (Association for the Advancement of Cost Engineering) recommends 15-30 percent for a preliminary budget estimate. HMM historically utilizes 28 percent at this level of project definition. The design & bidding contingency is added to provide the expected cost at the time the project will be bid. That includes potential design changes, economic market conditions, potential number of qualified bidders and how the contractors may see the difficulties in executing such a project. It does not include any allowance for changes once the project construction has commenced

Risk contingency applies primarily to unforeseen events (i.e., hoist failure, material delays, construction change orders, etc.) that may adversely affect the project schedule and increase project direct and indirect costs. For all options the contingency has been calculated as 10 percent of the total construction costs excluding construction contingency.

These two contingency categories (design and bidding; risk) overlap to some extent. However, a combined contingency of 38 percent is appropriate based on the nature of the project.

R□□R□□□t□r□B□□□d □ont□n□□n□□

The LBNE Water Cherenkov Detector cost and procurement guideline[17] prescribes a methodology for calculating project contingency. The document identifies four risk categories:

- Technical risk—this risk is based on the maturity of the technology used, from “off-the-shelf” to “state-of-the-art” technology.
- Cost risk—this risk is based on the maturity and nature of the cost estimating effort
- Schedule risk—this category is based on the impact of schedule delays on this or related subsystems on the critical path
- Design risk—this category is based on the level of the design effort

A risk factor and a weighting factor for each category is selected and combined according to:

$$C(\%) = R_t W_t + R_c W_c + R_s W_s + R_d W_d \qquad (1)$$

[17] Procedures for Cost Estimation, Contingency Analysis, and the Procurement Plan for the LBNE Water Cherenkov Detector (WCD) Subproject, WCD2009-2, May 2010 Draft.

where R_i and W_i are the risk and weighting factors for the technical, cost, schedule and design risks. The risk factors range from zero percent to 15 percent (see Table 1 in the guideline), and the weighting factors range from 1 to 4 (see Table 2 in the guideline). The two tables in the guideline were reviewed for application to the water containment vessel. In general, the technical risk factors were not applicable. The descriptions for the eight levels of technical risk were found to be more applicable to design of a piece of hardware rather than the design of a civil engineering structure. The eight cost risk factors, three schedule risk factors and four design risk factors were more applicable. The technical weighting factor was based on technical risks being "design OR manufacturing", or "design AND manufacturing. This weighting is applicable if "construction" is replaced with "manufacturing". Cost, schedule and design weights are applicable. More details may be found in the guideline.

Plausible low and high contingency values were estimated based on the categories and values in the guideline. Table 9 lists the results. The plausible low value of contingency for the water containment vessel is 20 and the plausible high value is 48.

Table 9—Contingency Range Based on Guideline

Case	R_t	W_t	R_c	W_c	R_s	W_s	R_d	W_d	$C(\%)$
Plausible Low	4	2	4	1	2	1	6	1	20
Plausible High	6	4	4	2	8	1	8	1	48

A risk register was prepared for the water containment vessel (see Risk Assessment above). The risk register assigned each of the sixty-five risks a "likelihood of occurrence" rating ranging from 1 to 5, and a "severity" rating also ranging from 1 to 5. A "risk ranking" is then computed:

$$R_r = L \cdot S \qquad (2)$$

where L is the likelihood of occurrence, S is the severity and R_r is the risk ranking. Each risk in the risk register was assigned to either the technical, cost or schedule categories. (The design risk category was excluded because it is solely based on the maturity of the design.) Some of the risks in the register could have been assigned to two or three categories—an arbitrary choice between categories was made. The risk rankings were scaled from a maximum of 25 to a maximum of 15, averaged and used to compute a contingency value based on equation (1) above. The resulting risk rating values, weights and contingency value are listed in Table 10.

Table 10—Contingency Value Based on Risk Register

Case	R_t	W_t	R_c	W_c	R_s	W_s	R_d	W_d	$C(\%)$
2A	6.2	2	4.8	2	7.3	1	8	1	37.3
2C	7.02	2	5.33	2	7.67	1	9	1	41.4

The risk-based contingency value of 37.3 percent is very close to the judgment-based value of 38 percent described above and used in the Phase 1 report.

A value of 38 percent should be used until further assessment of project risks and additional design effort.

Cost Summary

Table 11 lists the individual estimated cost of the alternative concepts, and Figure 15 illustrates the costs graphically. **Appendix B** contains cost detail tables for each concept. The cost basis and contingency values for each cost are described in section **Cost Basis** on page 38. All costs are quoted without contingency, although contingency values are discussed and recommended in the preceding sections.

The concept costs range from about $9 million to $25.6 million, with the no-vessel Concept 2C least expensive and the Concept 2A with a thick vessel wall and stainless steel liner the most expensive.

Table 11—Concept Costs, 3Q2010 US Dollars, No Contingency

Concept	Description	Cost, No Concrete Vessel	Cost, 10-in thick vessel	Cost, 28-in thick vessel
2A	Concrete with stainless steel liner	n.a.	$19.97 m	$25.57 m
2A	Concrete with polymer liner	n.a.	$15.95 m	$21.55 m
2C	Polymer liner over shotcrete (4 layer)	$11.10 m	n.a.	n.a.
2C	Polymer liner over shotcrete (2 layer)	$10.32 m	n.a.	n.a.

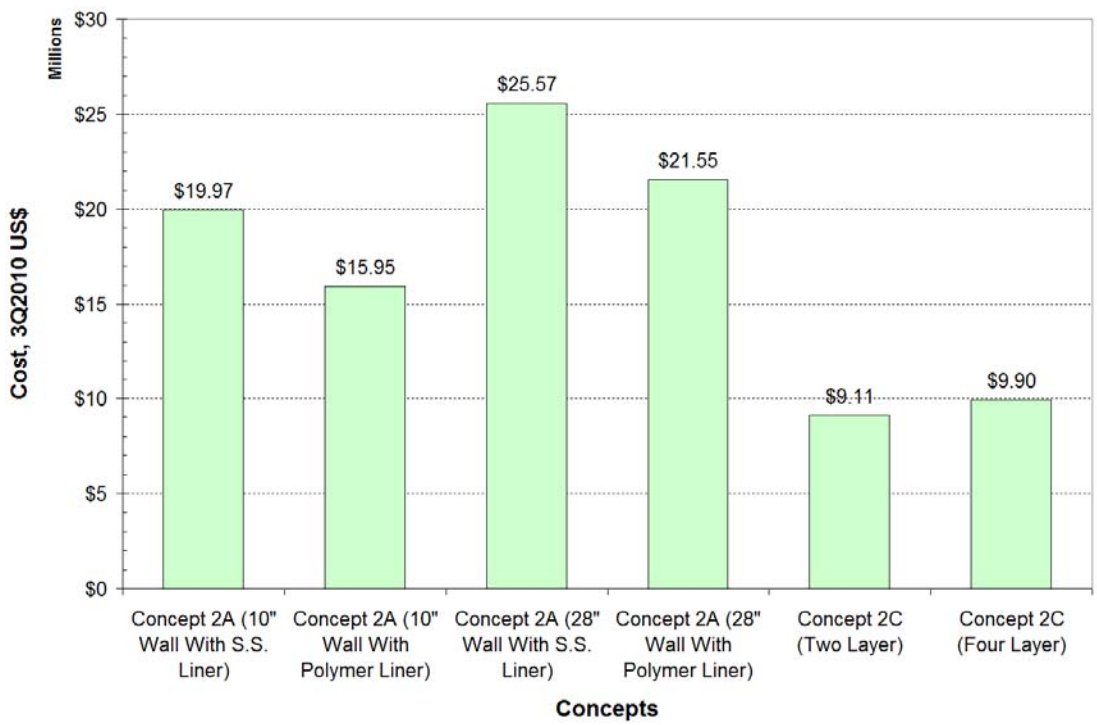

Figure 15—Summary of Concept Costs

Schedule Summary

Gantt charts showing the schedule for each concept are in **Appendix C**, and Table 12 lists the durations in calendar days for vessel construction, liner installation and overall durations. The vessel construction durations include casting the floor slab for all concepts, and casting the vessel wall for Concept 2A or preparing the shotcrete for drainage and liner materials for Concept 2C. Liner installation includes only the vessel drainage and liner for Concept 2A, and

either the two-layer or four-layer drainage and liner for Concept 2C. The overall duration is from the Notice to Proceed to the end of mobilization.

Table 12—Concept Schedule Summary

Concept	Description	Vessel Constr. (cal. days)	Liner Install. (cal. days)	Overall Duration (cal. days)
2A	10-inch Concrete with S.S. liner	143	65	369
2A	10-inch Concrete with polymer liner	143	44	348
2A	28-inch Concrete with S.S. liner	205	67	431
2A	28-inch Concrete with polymer liner	205	46	410
2C	Polymer liner over shotcrete (2 layer)	58	43	266
2C	Polymer liner over shotcrete (4 layer)	58	78	301

The incremental durations for some of the Concepts and sub-concepts are:

- Increasing the vessel thickness from 10 inches to 28 inches adds 62 days to the vessel construction duration, and to the overall duration
- Changing the Concept 2A liner from stainless steel to polymer subtracts 21 days from the liner installation duration, and from the overall duration
- Eliminating the vessel (changing from Concept 2A to Concept 2C subtracts 85 days from the vessel construction durations
- Changing from a two-layer to a four-layer liner for Concept 2C adds 35 days to the liner installation duration

Figure 16 illustrates the total and incremental durations for all six subconcepts.

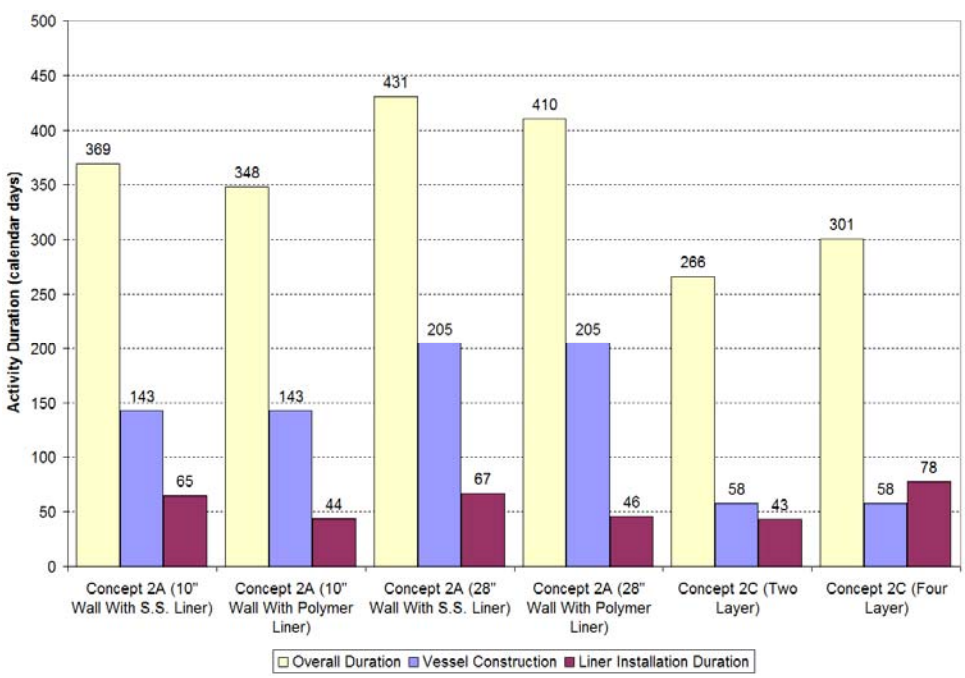

Figure 16—Schedule Durations for Overall, Vessel & Liner Construction

Future Design Considerations

(to be written)

Recommendations

Preferred Concept

(to be written)

Appendix A

LBNE Water Containment Vessel Design Criteria

Appendix B

Cost Detail Tables

Appendix C

Gantt Chart Schedules

Appendix D

Liner Material Properties

Appendix E

Risk Register

	LBNE Water Cherenkov Detector **BASIS of ESTIMATE FORM (BoE)**	**Date of Estimate: August, 2011** **Revision #: 2** **Prepared By: Jack Fowler/Robert Paulos** **Approved By:** **Level 2 Manager**

WBS Number: **1.04.02.03**	**WBS Title:** **Deck Assembly**

WBS Dictionary:

This is the assembly over the vessel that forms the roof of the detector. It includes provisions for holding all equipment below and above.

Cost Type **(check all that apply):** __x_ EDIA Material __x_ EDIA Labor __x_ MFG Material __x_ MFG Labor	**Costing Method** **(check all that apply):** __x_ Engineering Judgment ___Physicist Estimate ___ Level of Effort __x_ Vendor Quote (attached) ___ Catalog Price (specify) ___ Prior purchase ___ Prior experience __x_ Parametric Estimate ___ Other- Description:_____

Attach Relevant Documents (including but not limited to):

M&S Contingency (%)**: 21**	**Labor Contingency** (%)**: 23**

Basis of Estimate
Details of Estimate - Deck Assembly: This estimate includes the costs to design and construct the deck structure over the WCD. It also includes costs for the gas blanket system, ports used for detector calibration, and the mounting structure for the under deck PIUs. The deck will consist of two levels; a balcony located approximately 4 meters above 4850L, and the main deck surface, filling the center of the balcony, at 4850L. All materials located under the two surfaces will be constructed of stainless steel or other approved material for contact with ultra pure water. The materials will be moved to the floor of the cavity and the deck will be constructed there. Once complete, it will be raised using hydraulic cable hoists to 4850L, and attached at the deck cavity support points. The deck design will be completed using a combination of an A&E firm and LBNE engineers. This will occur in two stages, preliminary and final design. This cost of the A&E firm was estimated as 15% of the total deck structure. There is also EDIA allotted for LBNE engineers and designer to follow and support the progress of the design and provide any internal documentation needed. After the design is complete, prototypes may be required. Some time and money are allocated for this. Time is allocated for LBNE personnel to travel to and oversee the fabrication of the components. Once materials are moved to 4850L, the construction of the deck will occur on the floor of the cavity. All materials and labor for the construction are included. Most of these costs are based on a budgetary estimate from a major construction company. The original estimate was for the 100 kT configuration. Scaling factors were used to estimate the 200 kT version. Deck requirements were passed onto the company for the estimate. The company took estimates of the total material used and applied their general fabrication, construction, and erection factors to estimate a total cost to complete. These costs include both material and labor for this. For LBNE estimated items, we used costs found on the internet for the materials required and then applied a weight factor to estimate the fabrication, construction, and erection costs. These factors and all estimates are in the parts list, WBS 1.4.2.3 Cost Estimate. The envelopes and dimensions for the deck assembly are defined and a general concept is understood. However, this concept has not been evaluated by experts in structural or truss design. During the preliminary and final design process, the concepts will be optimized and the estimate refined. These cost estimates are based on one company's estimate and internal estimates by LBNE personnel. See comments in Parts List tab of the Cost Estimate workbook for specifics and deviations/changes from the construction companies estimate. A labor rate of $59/hr is assumed for all construction workers. Not included in this estimate are the monorails, gondolas, hoists for the perimeter lifting under the balcony, the labor and lifting equipment for raising the deck, Details of Estimate - Gas Blanket: This estimate includes the equipment, piping, monitoring, and safety system required to put a blanket of Radon reduced gas under the deck surface above the water. The estimate for the equipment was provided by H. Sobel from equipment required by another experiment that also uses Radon Free Air (RFA). Specifically, this equipment is capable of producing 170 m3/hr of RFA. Also included in this estimate is the piping required from the RFA equipment to the headspace and the venting of the gas, equipment to monitor the Radon levels in the head space, and a pressure monitoring system with safeties to prevent both over and under pressure. It is not fully decided if RFA will be used over Nitrogen. The two options have approximately the same total costs.

Details of Estimate - Calibration: This estimate includes the materials and labor to install 32 calibration ports through the deck. These ports are assumed to be approximately 14 inches in diameter and will have sealed removable covers. Each port will also have a pipe extending into the water volume below. For the estimate, we used costs found on the internet for the materials required and then applied a weight factor to estimate the fabrication, construction, and installation costs. These factors and all estimates are in the parts list, WBS 1.4.2.3 Cost Estimate.

Assumptions/Interfaces

Constraints

Comments

130.04.02.03 Deck Assembly

WBS LEVEL 5	ACTIVITY ID	ACTIVITY DESCRIPTION	START DATE	FINISH DATE	DURATION	RESOURCE	HOURS	COST	TOTAL with Escalation
130.04.02.03.01 Deck Structure	WC1560	Deck Structure - Conceptual design	5/14/2010	2/21/2012	440	BNL M&S CE from DK: Mechanical Engineer	387	26,807	27,399
						BNL M&S CE from UW: Mechanical Designer	449	31,088	31,775
						BNL M&S CE from UW: Mechanical Engineer	854	77,626	79,341
		Deck Structure - Conceptual design Total					1,690	135,522	138,515
	WC1570	Deck Structure - Internal review	5/5/2010	5/14/2010	8	BNL M&S CE from DK: Mechanical Engineer	51	3,556	3,556
		Deck Structure - Internal review Total					51	3,556	3,556
	WC1580	Deck Structure - Technology review	8/24/2010	9/2/2010	8	BNL M&S CE from DK: Mechanical Engineer	51	3,556	3,556
		Deck Structure - Technology review Total					51	3,556	3,556
	WC1590	Deck Structure - Prepare SOW and cont	5/30/2012	10/5/2012	89	BNL M&S CE from DK: Mechanical Engineer	235	16,267	16,792
		Deck Structure - Prepare SOW and contract support Total					235	16,267	16,792
	WC1592	Deck Structure - Prepare SOW and cont	5/30/2012	10/5/2012	89	BNL M&S CE Costs		350,000	359,831
		Deck Structure - Prepare SOW and contract Total						350,000	359,831
	WC1600	Deck Structure - Preliminary design	11/2/2012	8/12/2013	190	BNL M&S CE from DK: Mechanical Engineer	342	23,678	24,561
						BNL M&S CE from UW: Mechanical Designer	1,026	71,071	73,722
						BNL M&S CE from UW: Mechanical Engineer	513	46,652	48,392
						BNL M&S CE from UW: Travel		5,939	6,264
		Deck Structure - Preliminary design Total					1,881	147,340	152,939
	WC1610	Deck Structure - Final design	1/8/2014	10/23/2014	200	BNL M&S CE from DK: Mechanical Engineer	856	59,263	63,265
						BNL M&S CE from UW: Mechanical Designer	1,198	82,986	88,590
						BNL M&S CE from UW: Mechanical Engineer	1,712	155,689	166,203
						BNL M&S CE from UW: Travel		7,426	8,061
						BNL M&S CE from DK: Travel		3,120	3,387
		Deck Structure - Final design Total					3,766	308,485	329,506
	WC1630	Deck Structure - Prototype and test	10/23/2014	8/14/2015	200	BNL M&S CE from DK: Mechanical Engineer	300	20,770	22,724
						BNL M&S CE from UW: Mechanical Engineer	300	27,282	29,849
						BNL M&S CE Supplies		74,250	82,596
		Deck Structure - Prototype and test Total					600	122,302	135,169
	WC1640	Deck Structure - Procurement and cont	5/31/2016	11/15/2016	120	BNL M&S CE from DK: Mechanical Engineer	342	23,678	26,787
						BNL M&S CE from UW: Mechanical Engineer	557	50,635	57,284
						BNL M&S CE from DK: Travel		6,240	7,177

	WC1640	Deck Structure - Procurement and contracts Total					899	80,554	91,249
	WC1650	Deck Structure - Fabrication	10/17/2017	4/30/2019	400	BNL M&S CE Costs		9,523,764	11,591,641
		Deck Structure - Fabrication Total						9,523,764	11,591,641
	WC1670	Deck Structure - Transportation	4/30/2019	9/3/2019	90	BNL M&S CE from DK: Mechanical Engineer	149	10,343	12,589
		Deck Structure - Transportation Total					149	10,343	12,589
	WC1680	Deck Structure - Install on detector	11/12/2019	8/18/2020	200	BNL M&S CE from DK: Mechanical Engineer	1,370	94,848	118,560
						BNL M&S CE from UW: Mechanical Technician	1,370	93,529	116,912
						BNL M&S CE from UW: Travel		7,426	9,437
						BNL M&S CE from DK: Travel		7,800	9,912
		Deck Structure - Install on detector Total					2,740	203,603	254,821
	WC1690	Deck Lifting	8/18/2020	9/15/2020	20	BNL M&S CE Service Contract		300,000	381,240
		Deck Lifting Total						300,000	381,240
	WC1641	Deck Structure - Procurement and cont	#N/A	#N/A	#N/A	BNL M&S CE Costs		650,000	747,649
		Deck Structure - Procurement and contracts Total						650,000	747,649
	WC1644	Deck Structure - Fabrication Support	#N/A	#N/A	#N/A	BNL M&S CE from DK: Mechanical Engineer	640	44,309	51,717
						BNL M&S CE from UW: Mechanical Designer	172	11,914	13,906
						BNL M&S CE from UW: Travel		3,120	3,703
						BNL M&S CE from DK: Travel		6,240	7,405
		Deck Structure - Fabrication Support Total					812	65,583	76,731
130.04.02.03.01 Deck Structure Total							**12,874**	**11,920,876**	**14,295,786**
130.04.02.03.02 Gas Blanket	WC1700	Gas Blanket - Conceptual design	10/15/2013	3/14/2014	100	BNL M&S CE from DK: Mechanical Engineer	150	10,385	11,063
						BNL M&S CE from UW: Mechanical Designer	150	10,391	11,069
						BNL M&S CE from UW: Mechanical Engineer	43	3,910	4,165
		Gas Blanket - Conceptual design Total					343	24,685	26,297
	WC1710	Gas Blanket - Preliminary design	3/14/2014	1/2/2015	200	BNL M&S CE from DK: Mechanical Engineer	342	23,678	25,431
						BNL M&S CE from UW: Mechanical Designer	172	11,914	12,796
						BNL M&S CE from UW: Mechanical Engineer	150	13,640	14,650
		Gas Blanket - Preliminary design Total					664	49,233	52,877
	WC1720	Gas Blanket - Technology review	1/2/2015	1/12/2015	6	BNL M&S CE from DK: Mechanical Engineer	43	2,963	3,242
		Gas Blanket - Technology review Total					43	2,963	3,242
	WC1730	Gas Blanket - Final design	1/12/2015	10/27/2015	200	BNL M&S CE from DK: Mechanical Engineer	342	23,678	25,968
						BNL M&S CE from UW: Mechanical Designer	684	47,381	51,964
						BNL M&S CE from UW: Mechanical Engineer	150	13,641	14,960

	WC1730	Gas Blanket - Final design	1/12/2015	10/27/2015	200	BNL M&S CE from DK: Travel		3,120	3,479
		Gas Blanket - Final design Total					1,176	87,820	96,371
	WC1750	Gas Blanket - Prototype and test	10/27/2015	12/28/2016	300	BNL M&S CE Costs		5,001	5,745
						BNL M&S CE from DK: Mechanical Engineer	171	11,839	13,376
						BNL M&S CE from UW: Mechanical Engineer	171	15,551	17,570
		Gas Blanket - Prototype and test Total					342	32,391	36,691
	WC1760	Gas Blanket - Procurement and contrac	12/28/2016	10/4/2017	200	BNL M&S CE from UW: Mechanical Engineer	150	13,641	15,744
		Gas Blanket - Procurement and contracts Total					150	13,641	15,744
	WC1770	Gas Blanket - Fabrication	10/4/2017	11/28/2018	300	BNL M&S CE Costs		200,001	241,886
		Gas Blanket - Fabrication Total						200,001	241,886
	WC1790	Gas Blanket - Install on detector	3/3/2020	8/18/2020	120	BNL M&S CE Costs		145,000	184,266
						BNL M&S CE from DK: Mechanical Engineer	172	11,880	14,850
						BNL M&S CE from UW: Mechanical Engineer	172	15,604	19,505
						BNL M&S CE from DK: Travel		3,120	3,965
		Gas Blanket - Install on detector Total					343	175,604	222,585
	WC1771	Gas Blanket - Fabrication Support	10/4/2017	11/28/2018	300	BNL M&S CE from DK: Mechanical Engineer	213	14,747	17,542
						BNL M&S CE from UW: Mechanical Designer	342	23,691	28,182
						BNL M&S CE from UW: Mechanical Engineer	87	7,911	9,410
		Gas Blanket - Fabrication Support Total					642	46,348	55,134
130.04.02.03.02 Gas Blanket Total							**3,703**	**632,686**	**750,826**
130.04.02.03.03 Calibration port	WC1810	Calibration ports and Access - Conceptu	11/10/2014	4/9/2015	100	BNL M&S CE from DK: Mechanical Engineer	150	10,385	11,362
						BNL M&S CE from UW: Mechanical Designer	150	10,391	11,368
						BNL M&S CE from UW: Mechanical Engineer	300	27,282	29,849
		Calibration ports and Access - Conceptual design Total					600	48,057	52,580
	WC1820	Calibration ports and Access - Prelimina	4/9/2015	1/28/2016	200	BNL M&S CE from DK: Mechanical Engineer	150	10,384	11,482
						BNL M&S CE from UW: Mechanical Designer	150	10,390	11,488
						BNL M&S CE from UW: Mechanical Engineer	150	13,640	15,082
						BNL M&S CE from DK: Travel		3,120	3,507
		Calibration ports and Access - Preliminary design Total					450	37,534	41,558
	WC1830	Calibration ports and Access - Final des	1/28/2016	11/3/2016	200	BNL M&S CE from DK: Mechanical Engineer	1,198	82,942	93,476
						BNL M&S CE from UW: Mechanical Designer	300	20,781	23,420
						BNL M&S CE from UW: Mechanical Engineer	150	13,640	15,372
						BNL M&S CE from DK: Travel		3,120	3,575
		Calibration ports and Access - Final design Total					1,648	120,483	135,844

	WC1850	Calibration ports and Access - Prototyp	11/3/2016	3/23/2017	100	BNL M&S CE Costs		148,600	174,338
						BNL M&S CE from DK: Mechanical Engineer	1,626	112,573	129,897
						BNL M&S CE from UW: Mechanical Engineer	193	17,551	20,252
		Calibration ports and Access - Prototype and test Total					1,819	278,723	324,486
	WC1860	Calibration ports and Access - Procuren	3/23/2017	8/10/2017	100	BNL M&S CE from DK: Mechanical Engineer	171	11,840	13,662
		Calibration ports and Access - Procurement and con Total					171	11,840	13,662
	WC1870	Calibration ports and Access - Fabricati	8/10/2017	5/17/2018	200	BNL M&S CE Costs		100,000	119,896
						BNL M&S CE from DK: Mechanical Engineer	1,112	76,987	90,787
						BNL M&S CE from UW: Mechanical Designer	42	2,910	3,432
						BNL M&S CE from UW: Mechanical Engineer	150	13,640	16,085
		Calibration ports and Access - Fabrication Total					1,304	193,537	230,199
	WC1890	Calibration ports and Access - Install on	5/26/2020	8/18/2020	60	BNL M&S CE Costs		50,000	63,540
						BNL M&S CE from DK: Mechanical Engineer	171	11,840	14,799
						BNL M&S CE from UW: Mechanical Engineer	171	15,552	19,440
		Calibration ports and Access - Install on detector Total					342	77,391	97,779
130.04.02.03.03 Calibration ports and Access Total							**6,334**	**767,565**	**896,108**
Grand Total							**22,911**	**13,321,126**	**15,942,720**

RYERSON

SALES QUOTATION ACKNOWLEDGEMENT

JOSEPH T. RYERSON
RYERSON COIL PROCESSING
RYERSON CANADA

QUOTE NBR: 21854942

ATTENTION: Ken
REFERENCE:
PHONE NO.: FAX NO.:

SALES OFFICE:
Ryerson Milwaukee
500 South 88th St.
MILWAUKEE, WI 53214

FROM: Terra Taylor
Email: Terra.Taylor@ryerson.com
Phone No. 414-453-8000 Fax No. 414-453-8241

SOLD TO:
UNIVERSITY OF WISCONSIN(STOUGHTON)
KEGONSA RESEARCH CAMPUS-PURCHASING
3725 SCHNEIDER DRIVE
STOUGHTON, WI 53589-3097

SHIP TO:
UNIVERSITY OF WISCONSIN
PHYSICAL SCIENCES LAB
3725 SCHNEIDER DR
STOUGHTON, WI 53589-3034

ADDITIONAL COMMENTS:
Hi Ken,
I can only offer about 13,000# at this time for the channel due to current stock availability, but we could possible find more for you with an order and longer lead time.
Thank you for your inquiry,

SHIPCOND: Standard Shipping
PURCHASE ORDER #: rfq

TERMS: Payment by Credit Card
FRT TERMS: PPD

AUTHORIZED SIGNATURE: _____

Quote Line No.	Ord Qty	Ord Uom	Item Description	Estimated Weight Lbs	Quantity in Price Uom	Price	Prc Uom
10	7670	LB	Stnls Bar RD CF 304/304L Ann 1" X 156" RL	7,670.910	7,670.0000	$2.3200	LB
				Extended Amount		$17,794.40	
Pieces: 221			P/N	Delivery Date	06/25/2010		
20	969	LB	Stnls Bar RD CF 304/304L Ann 0.5" X 144"	969.355	969.0000	$2.1600	LB
				Extended Amount		$2,093.04	
Pieces: 121			P/N	Delivery Date	06/25/2010		
30	13099	LB	Stnls CHAN 304 AP 4" X 1.75" X 0.25" X 264" RL	13,099.020	13,099.0000	$4.6300	LB
				Extended Amount		$60,648.37	
Pieces: 89			P/N	Delivery Date	06/25/2010		
40	3600	LB	Stnls Bar FLT HR 304 AP EC 0.25" X 1" X 144"	3,600.600	3,600.0000	$2.1900	LB
				Extended Amount		$7,884.00	
Pieces: 353			P/N	Delivery Date	06/25/2010		

50	5280	LB	Stnls HR Coil 304/304L AP PI SHEET 5/16 X 48" X 96"	5,280.000	5,280.0000	$1.8000	LB
				Extended Amount		$9,504.00	
Pieces: 12		P/N		Delivery Date	06/25/2010		
		Oper 1	CTL				

		Tax	
Total Weight	30,620	Quote Total Less Tax	$97,923.81

The Ryerson Conditions and Terms of Sale are applicable to all sales by Ryerson.
The prices quoted may be changed by us without notice in order to reflect our prices at time of shipment and any increase in transportation, labor, or other costs.
Surcharges will be billed at amounts in effect at time of shipment. Prices do not include applicable fuel surcharge.
Any quantity change may result in price change.
Material subject to prior sale.
Quote total and taxes subject to change based on quantity shipped.
Delivery dates are subject to change.
Payment Terms on quote subject to prior credit approval by Joseph T. Ryerson & Son, Inc. authorized Credit Personnel.
THIS QUOTATION DOES NOT CONSTITUTE AN OFFER. PLEASE CONTACT THE SENDER
FOR A COMPLETE SET OF TERMS AND CONDITIONS GOVERNING THIS QUOTATION.

WCD - Parts list

Part	Material Quantity	Unit	Material / Fabrication Unit Cost	Erection / Installation Unit Cost	Material / Fabrication Cost	Erection / Installation Cost	Total Cost	Scaling Notes
				Budget Estimate				
								Assumed hourly rate is $120/hr which includes training, equipment and OH&P. All work is assumed to be performed on straight time.
Deck system								
Support system								
Level 2 support corbel assy	24.00	ea	$5,000.00	$2.00	$240,000.00		$320,000.00	Increased corbels from 24 to 32
Level 1 lateral stabilizer assy	6.56	tons	$322.00	$1.50	$46,368.00		$46,368.00	no change
Anchor assembly to dome	2.20	tons	$1,000.00	$2.00	$80,000.00		$144,000.00	Increased dome anchor points from 40 to 72.
Rigid hanger assembly	2.65	tons	$100.00	$1.50	$72,000.00		$96,000.00	Increased from 24 to 32
Cable hanger assembly	0.88	tons	$12.00	$1.50	$5,760.00		$14,400.00	Increased from 16 to 40
fitting assy A	2.65	tons	$750.00	$2.00	$36,000.00		$48,000.00	Increased from 24 to 32
fitting assy B	1.76	tons	$500.00	$2.00	$16,000.00		$40,000.00	Increased from 16 to 40
fitting assembly C	1.76	tons	$750.00	$2.00	$24,000.00		$48,000.00	Increased from 16 to 32
Total Support system	**18.47**				**$520,128.00**	**$0.00**	**$756,768.00**	
Level 2 balcony assy (assume 8 m width)								
Railing assembly Level 2	483.80	lf	$150.00	$73.75	$72,570.00	$35,680.25	$108,250.25	Increased the Material Quantity by 20%
Decking Level 2	53.11	tons	$16,000.00	$2,714.00	$849,825.68	$144,151.68	$993,977.36	Increased by area increase of Level 2 (1.36). Multiplied the Material Quantity
Floor trusses.	41.26	tons	$2,400.00	$6,726.00	$99,014.41	$277,487.87	$376,502.28	Increased by area increase of Level 2 (1.36). Multiplied the Material Quantity
monorail for gondola	492.00	lf	$250.00	$73.75	$123,000.00	$36,285.00	$159,285.00	
Gondolas	4.00	ea	$0.00	$11,800.00	$0.00	$47,200.00	$47,200.00	
monorail for hoist	492.00	lf	$250.00	$73.75	$123,000.00	$36,285.00	$159,285.00	
Hoists	2.00	ea	$0.00	$11,800.00	$0.00	$23,600.00	$23,600.00	
insulation under Level 2	17,288.50	sf	$0.00	$5.50	$0.00	$95,086.74	$95,086.74	
Total Level 2					**$1,021,410.09**	**$552,406.54**	**$1,573,816.63**	
Level 1 main deck assy (assume 47 m OD)								
Railing assembly Level 1	587.35	lf	$150.00	$73.75	$88,102.82	$43,317.22	$131,420.05	Increased from 485 to 587
Primary major trusses	114.13	tons	$3,400.00	$4,130.00	$388,049.28	$471,365.75	$859,415.03	Truss length increased 18%, height will also increase. Increased overall by 25%. Multiplied the Material Quantity.
Connecting cords between major trusses	9.64	tons	$3,400.00	$5,900.00	$32,791.33	$56,902.60	$89,693.92	Increased by area increase (1.47). Multiplied the Material Quantity.
Decking Level 1	84.58	tons	$16,000.00	$10,200.00	$1,353,342.21	$862,755.66	$2,216,097.87	Increased by area increase (1.47). Multiplied the Material Quantity.
Secondary trusses A	35.26	tons	$9,600.00	$8,850.00	$338,491.11	$312,046.49	$650,537.60	Increased by area increase (1.47). Multiplied the Material Quantity.
Secondary trusses B	24.89	tons	$9,600.00	$7,080.00	$238,934.90	$176,214.49	$415,149.39	Increased by area increase (1.47). Multiplied the Material Quantity.
Curtain wall assy	24.53	tons	$16,000.00	$4,801.09	$392,468.18	$117,767.07	$510,235.25	Length increased by 22%. Multiplied the Material Quantity.
Insulation of curtain wall	7,984.21	sf	$0.00	$3.50	$0.00	$27,944.73	$27,944.73	Length increased by 22%. Multiplied the Material Quantity.
Insulation under deck	27,531.83	sf	$0.00	$5.50	$0.00	$151,425.05	$151,425.05	Increased by area increase (1.47). Multiplied the Material Quantity.
	293.04							
Main drift entrance bridge (size ~ 10 m x 5 m)								
Main entrance bridge supports			$6,000.00	$2,719.50	$36,000.00	$16,317.00	$52,317.00	

WCD - Parts list

Part	Material Quantity	Unit	Material / Fabrication Unit Cost	Erection / Installation Unit Cost	Material / Fabrication Cost	Erection / Installation Cost	Total Cost	Scaling Notes
				Budget Estimate				
Decking material for bridge	1.65	tons	$16,000.00	$1,631.70	$26,455.20	$2,697.93	$29,153.13	
Safety rails	52.00	lf	$150.00	$73.75	$7,800.00	$3,835.00	$11,635.00	
Doors to seal off annulus	360.00	sf	$240.00	$24.58	$86,400.00	$8,850.00	$95,250.00	
Door frame around door above.	90.00	lf	$600.00	$67.99	$54,000.00	$6,118.88	$60,118.88	
Calibration entrance bridge (size 4 m x 5 m)								
Calibration entrance bridge supports	3.00	ea	$0.00	$9,500.00	$0.00	$28,500.00	$28,500.00	
Decking material for bridge	0.66	tons	$16,000.00	$2,400.54	$10,582.08	$1,587.67	$12,169.75	
Safety rails	52.00	lf	$150.00	$73.75	$7,800.00	$3,835.00	$11,635.00	
Doors to seal off annulus	240.00	sf	$240.00	$24.58	$57,600.00	$5,900.00	$63,500.00	
Door frame around door above.	60.00	lf	$600.00	$29.50	$36,000.00	$1,770.00	$37,770.00	
Total Level 1					**$3,154,817.12**	**$2,299,150.53**	**$5,453,967.65**	
Access Equipment and Temp infrastructure								
Stairs between level 1 and 2	8.00	flgts	$12,600.00	$5,040.00	$100,800.00	$40,320.00	$141,120.00	
Lift between level 1 and 2 for equipment	2.00	ea	$0.00	$40,000.00	$0.00	$80,000.00	$80,000.00	
Hatches into detector volume	2.00	ea	$20,000.00	$5,000.00	$40,000.00	$10,000.00	$50,000.00	
Lighting/electrical under deck for installation and integration	1.00	ls	$0.00	$50,000.00	$0.00	$50,000.00	$50,000.00	
Additional safety rails needed for aisleways.	820.00	lf	$150.00	$29.50	$123,000.00	$24,190.00	$147,190.00	Increased by 25%. Multiplied the Material Quantity.
Utilities penetrations, seals & supports							$28,000.00	Increased by 40%
Infrastructure for Glove box							$37,500.00	
Interface for magnetic compenstation							$14,700.00	Increased by 40%
Total Access and Temp Infrastructure					**$263,800.00**	**$204,510.00**	**$548,510.00**	
Extention hardware from secondary trusses to PIU frame							**$1,190,700.00**	Original number from Ken's detailed estimate. Increased for 200kTon by area of level 1 (1.47)
Total for Deck Assembly					**$4,960,155.20**	**$3,056,067.07**	**$9,523,762.28**	

SubTotals	**Decking total**	**$2,240,205.17**	**$1,011,192.95**	**$3,251,398.12**
	Truss total	**$1,133,281.03**	**$1,338,834.20**	**$2,472,115.22**
	Sum of above	**$3,373,486.20**	**$2,350,027.14**	**$5,723,513.34**

Non Deck Items.

Gas Blanket				
Radon Free Air Generator	1	$100,000.00	2	$200,000.00
Distribution Piping	1000	$5.00	3	$15,000.00
Pressure regulation device and monitoring equipment		$10,000.00	3	$30,000.00
Total Gas Blanket				**$245,000.00**
Calibration				
Penetrations	32	$1,000.00	3	$96,000.00
Penetration covers	32	$500.00	3	$48,000.00
Penetration hardware	32	$150.00	3	$14,400.00
Port extensions	32	$200.00	3	$19,200.00
Total Calibration				**$91,200.00**

Grand Total **$9,859,962.28**

	LBNE Water Cherenkov Detector **BASIS of ESTIMATE FORM (BoE)**	**Date of Estimate: 8 Sept 2011** **Revision #: 3** **Prepared By: Farshid Feyzi** **Ken Kriesel** **Approved By:** **Level 2 Manager**

WBS Number: **130.04.02.04**	**WBS Title:** **Floor**

WBS Dictionary:
This includes the water containment vessel floor starting from rock floor upward to the water. It includes all waste and leak water collection systems.

Cost Type **(check all that apply):** _x_ EDIA Material _x_ EDIA Labor _x_ MFG Material _x_ MFG Labor	**Costing Method** **(check all that apply):** _x__ Engineering Judgment ___Physicist Estimate _x__ Level of Effort ___ Vendor Quote (attached) ___ Catalog Price (specify) _x__ Prior purchase _x__ Prior experience ___ Parametric Estimate ___ Other- Description:_____

Attach Relevant Documents (including but not limited to):

M&S Contingency (%)**: 20**	**Labor Contingency** (%)**: 18**

Basis of Estimate

Details of estimate:

This WBS element includes two subsystems:

1. The structural components required for mounting PAs at the proper height on the floor
2. The bulkhead door at the bottom of the detector

The estimate for both of these items appear in WBS element 130.4.2.4.2 (130.4.2.4.1 is currently unused).

Item 1 details:

- Labor hour estimates are engineering estimates based on similar projects
- Material and construction estimate is based on a detail estimate of components ($485k) in a separate workbook. This estimate was done for 100kton. It was scaled by floor area for 200kton ($677k). No indirect is applied as this is a large contract assumed to be thru UW-Madison
- A conceptual design was created & modeled, and then estimated in a detailed spreadsheet, with a combination of current vendor quotes for specific materials, current catalog item prices, and engineering judgment used to estimate material costs from pricing for similar sizes & forms of the same alloy. Labor for fabrication is estimated as a multiplier on material cost taking into consideration number of features per part.
- A budget of $50k is also included for prototyping, pre-production and testing. Indirect is applied as this is small purchases.

Item 2 details:

- Labor hour estimates are engineering estimates based on similar projects
- A very rough estimate of $100k is included for the bulkhead door, this is an engineering estimate. No indirect is applied as this is assumed to be part of liner contract.
- A budget of $50k is also included for prototyping, pre-production and testing. No indirect is applied as this is assumed to be part of above contract.

WCD - Parts list	40001			ss density	8044	Kg/m³		56140	don't make direct entries in computed or dependent cells this shade gray	guess	vendor quote	engr judgment	
									do make entries in "no color" cells			labor	
Part	**Total count**	**Part Number**	**Size (m) each**				**mass/m**	**Mass (kg)**	**Part Description**	**$/kg est**	**Matl $**	**multiplier**	**$ w/ labor**
			L	H	W	L total	or ea, kg	per line item	304ss unless indicated otherwise				
Floor PIU supports									assumes 3x3 floor PIUs; could be adapted from 2 3x3's/cell to 3 2x3's		$ 221,231	2.109	$ 466,582
PIU Post	497	10	0.3	0.025	0.025	149.2	**1.2**	177	est qty incl edge treatment on this line item	$ 5.10	$ 902	3	$ 2,707
Jam nut M20	497	21					0.03	14	M20	$ 12.94	$ 187	1.5	$ 280
Coupling nut, ss M20	497	22					0.17	86	M20	$ 61.37	$ 5,308	1.5	$ 7,962
Stud	497	9	0.08				0.05	25	M10	$ 98.93	$ 2,487	1.5	$ 3,731
PIU corner node plate	879	11	0.2	0.008	0.2		2.6	2263	(increase this line by 50% if using 2x3 PIUs rather than 3x3's)	$ 3.96	$ 8,960	3	$ 26,880
X-way laterals	48	12	12			576	**8.9**	5143	100 by 45 by 6 channel assumed	$ 10.19	$ 52,387	2	$ 104,773
X-way laterals	4	13	9			36	**8.9**	321	100 by 45 by 6 channel assumed	$ 10.19	$ 3,274	2	$ 6,548
X-way laterals	4	14	6			24	**8.9**	214	100 by 45 by 6 channel assumed	$ 10.19	$ 2,183	2	$ 4,366
X-way laterals	2	15	3			6	**8.9**	54	100 by 45 by 6 channel assumed	$ 10.19	$ 546	2	$ 1,091
X-way diagonal bars	248	2 & 3	0.9			223.2	**0.91**	203	M12; half RH, half LH tips; probably lower & upper 2 different lengths; estimate based on average length	$ 4.75	$ 965	3	$ 2,895
X-way turnbuckle bodies	124	1	0.127			15.7	**4.08**	64	tapped LH & RH M12; nitronic recommended	$ 30.59	$ 1,963	3	$ 5,890
X-way coupler plate	40	16	0.076	0.010	0.038	3.04	0.23	9	rect strap with 3 clearance holes, ~1.5" x .4" x 3"	$ 5.00	$ 46	3	$ 139
Y-way laterals	439	17	3			1317	**8.9**	11759	100 by 45 by 6 channel assumed	$ 10.19	$ 119,780	2	$ 239,560
Y-way diagonal bars	580	4 & 5	1.58			917	**0.91**	834		$ 4.75	$ 3,965	3	$ 11,894
Y-way turnbuckle bodies	290	1	0.127			36.83	**4.08**	150		$ 30.59	$ 4,592	3	$ 13,775
diagonal tab (X way or Y way)	828	6	0.05	0.006	0.025	41.4	**1.2**	50		$ 4.82	$ 241	3	$ 722
vertical posts	470	7	0.9			423	**4.08**	1724	1" round bar assumed, 2 wrench flats per end, M10 stud on bottom, drilled/tapped on top	$ 5.10	$ 8,800	3	$ 26,400
bolts (mount PIU to corner node plate)	3556	18					0.016	58	tbd; ~M8x40; increase by 50% if 2x3 PIUs rather than 3x3's	$ 29.43	$ 1,692	1.5	$ 2,539
bolts (connect laterals at coupler plates)	80	19					0.016	1.3		$ 29.43	$ 38	1.5	$ 57
nuts	6272	8					0.0046	29	nitronic M8. Mass each based on weighed 18-8 samples	$ 49.43	$ 1,437	1.5	$ 2,156
edge treatment		many							**details TBD later, add 4% below**		$ -	3	$ -
bolts (vertical post to x laterals)	470	20					0.016	8	M10x30	$ 29.43	$ 224	1.5	$ 336
bolts (y lateral ends to corner node plates)	878	18					0.016	14		$ 29.43	$ 418	1.5	$ 627
bolts (x laterals to corner node plates)	1758	18					0.016	28		$ 29.43	$ 837	1.5	$ 1,255
											$ -		$ -
	parts count	18959			floor PIU support kg		23230		after 4% adder for edge treatment not estimated otherwise:		$ 230,080		$ 485,245
Deck PIU supports									assumes regular rectangular deck plates & parallel secondary trusses (not a higher number polygon like octagonal), surrounded by 3 meter radial annulus, 3x3 PIUs		$ 345,595	2.212	$ 764,538
radial spars to support PIUs on annulus	96	23	3			288	**8.9**	2572	100 by 45 by 6 channel assumed	$ 10.19	$ 26,193	3	$ 78,580
radial spar crossbar a long	96	24	0.4			38.4	**8.9**	343	100 by 45 by 6 channel assumed	$ 10.19	$ 3,492	3	$ 10,477
radial spar crossbar b	96	25	0.3			28.8	**8.9**	257	100 by 45 by 6 channel assumed	$ 10.19	$ 2,619	3	$ 7,858
radial spar crossbar c	96	26	0.27			25.92	**8.9**	231	100 by 45 by 6 channel assumed	$ 10.19	$ 2,357	3	$ 7,072
radial spar crossbar d short	96	27	0.2			19.2	**8.9**	171	100 by 45 by 6 channel assumed	$ 10.19	$ 1,746	2	$ 3,492
bolts, crossbars to spar	384	18					0.016	6		$ 29.43	$ 183	1.5	$ 274
PIU Post to support vessel end of radial spar	96	33	0.2			19.2	**1.2**	23	(unless we can use the top part of the uppermost wall PIU post plate)	$ 5.10	$ 116	3	$ 348
small angle bracket near vessel wall	96	28	0.05			4.8	**4.5**	21		$ 10.19	$ 218	2	$ 437
jam nut M20	96	21					0.03	3		$ 12.94	$ 36	1.5	$ 54
coupling nut ss M20	96	22					0.17	17		$ 61.37	$ 1,024	1.5	$ 1,536
post to bracket bolt	96	20					0.016	1.6	M10x30	$ 29.43	$ 46	1.5	$ 69
bracket to spar bolt	96	18					0.016	1.6		$ 29.43	$ 46	1.5	$ 69
Y-way laterals at secondary truss bottom	71	34	12			852	**8.9**	7607	these provide anchor points for diagonal PIU bracing, bridge pitch difference between decking period and PIU period, and act as anti-tip-braces for the secondary trusses	$ 10.19	$ 77,489	2	$ 154,977
	7	35	9			63	**8.9**	563	100 by 45 by 6 channel assumed	$ 10.19	$ 5,730	2	$ 11,460
	10	36	6			60	**8.9**	536	100 by 45 by 6 channel assumed	$ 10.19	$ 5,457	2	$ 10,914
	6	37	3			18	**8.9**	161	100 by 45 by 6 channel assumed	$ 10.19	$ 1,637	2	$ 3,274
Y3,Y33	2	38	3.664			7.33	**8.9**	65	100 by 45 by 6 channel assumed	$ 10.19	$ 666	3	$ 1,999
y4,y32	4	39	8			32	**8.9**	286	100 by 45 by 6 channel assumed	$ 10.19	$ 2,910	3	$ 8,731
Y-way laterals just above deck PIU frame level	71	40	12			852	**8.9**	7607	these provide anchor points for diagonal PIU bracing, and attachment points for the brackets to which the PIUs bolt	$ 10.19	$ 77,489	2	$ 154,977
	7	41	9			63	**8.9**	563	100 by 45 by 6 channel assumed	$ 10.19	$ 5,730	2	$ 11,460
	10	42	6			60	**8.9**	536	100 by 45 by 6 channel assumed	$ 10.19	$ 5,457	2	$ 10,914
	8	43	3			24	**8.9**	214	100 by 45 by 6 channel assumed	$ 3.96	$ 849	2	$ 1,697
	4	44	7.5			30	**8.9**	268	100 by 45 by 6 channel assumed	$ 10.19	$ 2,728	3	$ 8,185
X-way laterals just above deck PIU frame level	344	32	1.4			481.6	**8.9**	4300	these stabilize the PIU mounting plane elements	$ 10.19	$ 43,801	2	$ 87,602
circular portion edge treatment		many							**tbd later, add 6%**		$ -	3	$ -
y-way diagonal bars	436	4 & 5	1.58			689.4	**0.91**	627	short & long flavors; average length given here	$ 4.75	$ 2,980	3	$ 8,941
y-way turnbuckle bodies	218	1	0.127			27.7	**4.08**	112.8		$ 30.59	$ 3,452	3	$ 10,355
y-way diagonal tabs	436	6	0.05			21.8	**1.2**	26		$ 4.82	$ 127	3	$ 380
x-way diagonal bars	336	2 & 3	0.9			302.4	**0.91**	275	short & long flavors; average length given here	$ 4.75	$ 1,307	3	$ 3,922
x-way turnbuckle bodies	168	1	0.127			21.336	**4.08**	685		$ 30.59	$ 20,945	3	$ 62,835
x-way diagonal tabs	336	6	0.05	0.006	0.025	16.8	**1.2**	20.3		$ 4.82	$ 98	3	$ 293
PIU corner node plate	721	11	0.2	0.008	0.2		2.6	1856		$ 3.96	$ 7,349	3	$ 22,048
vertical posts	374	7	0.9			336.6	**4.08**	1372		$ 5.10	$ 7,003	3	$ 21,008
bolts mounting plates to y-way bars	1442	18					0.016	23		$ 29.43	$ 686	1.5	$ 1,030
u-bolts to mount upper y-way laterals to secondary trusses	1880	30					0.16	302	3/8-16 x 2 x 6.62 304ss with nuts & washers included (no drilling required at y-way laterals or secondary trusses)	73.12	$ 22,052	1.5	$ 33,079
plate clips to mount upper y-way laterals to secondary trusses	1880	31	0.18	0.005	0.08	338.4	**3.2**	1089	shear, bend, drill 2 holes & deburr	$ 3.96	$ 4,312	3	$ 12,935
bolts, PIU corners to corner node plates	2884	18					0.016	47		$ 29.43	$ 1,373	1.5	$ 2,059
bolts, PIU corners to annulus cross bars	192	18					0.016	3		$ 29.43	$ 91	1.5	$ 137
bolts, x-way laterals to corner node plates	688	18					0.016	11		$ 29.43	$ 327	1.5	$ 491
y-way coupler plates	207	4 & 5					0.23	48		$ 5.00	$ 240	3	$ 721
bolts, y-way coupler plates to y-way bars	414	19					0.016	7		$ 29.43	$ 197	1.5	$ 296
bolts, vertical post ends	748	20					0.016	12	M10x30	$ 29.43	$ 356	1.5	$ 534
shoulder eye bolt with nut	192	29					0.080	15	3/8-16x3/4; preinstall near each end of radial spar assembly for ease of install/remove beneath raised balcony to close or reopen gondola access downward. PIUs are handled separately	$ 222.50	$ 3,418	1.5	5126.4
											$ -	3	$ -
nuts	5502	8					0.0046	26	M8 nitronic	$ 49.43	$ 1,261	1.5	$ 1,891
	parts count	21038			deck PIU support kg		32909		after 6% adder for edge treatment not estimated otherwise:		$ 366,331		$ 810,411
PIU supports										deck & floor	combined	PIU support	$ 1,295,655
parts count ratio, deck vs floor	1.110		544	deck piu support assy's channel parts count									
mass ratio, deck vs floor	1.417												
cost ratio, deck vs floor	1.670												
Note, all amounts shown above are for one 100kton fiducial volume WC detector cavity, 55m diameter neat line, 1m vessel wall thickness									double or triple etc according to number of cavities to be budgeted				

Material Detail:

Assumptions/Interfaces
Approx. 500 rod-like inserts drilled into and sealed to floor & liner at specified locations.

Constraints

Comments
The floor inserts become part of the vessel when installed & so their fabrication & installation are not included in this estimate. They are included in the vessel/liner estimate.

130.04.02.04 Floor

WBS LEVEL 5	ACTIVITY ID	ACTIVITY DESCRIPTION	START DATE	FINISH DATE	DURATION	RESOURCE	HOURS	COST	TOTAL with Escalation
130.04.02.04.02 Floor Auxiliary E	WC2000	Floor Auxiliary Equipment - Conceptual	2/21/2012	12/6/2012	200	BNL M&S CE from UW: Mechanical Engineer	172	15,642	16,162
		Floor Auxiliary Equipment - Conceptual design Total					172	15,642	16,162
	WC2010	Floor Auxiliary Equipment - Preliminary	12/6/2012	9/25/2013	200	BNL M&S CE from UW: Mechanical Engineer	172	15,642	16,225
		Floor Auxiliary Equipment - Preliminary design Total					172	15,642	16,225
	WC2020	Floor Auxiliary Equipment - Final design	9/25/2013	7/17/2014	200	BNL M&S CE from UW: Mechanical Designer	172	11,914	12,685
						BNL M&S CE from UW: Mechanical Engineer	172	15,642	16,653
		Floor Auxiliary Equipment - Final design Total					344	27,556	29,338
	WC2040	Floor Auxiliary Equipment - Prototype a	7/17/2014	12/10/2014	100	BNL M&S CE Supplies		74,250	81,436
						FNAL M&S CE Costs		50,000	54,839
		Floor Auxiliary Equipment - Prototype and test Total						124,250	136,275
	WC2050	Floor Auxiliary Equipment - Procureme	10/2/2018	2/19/2019	100	BNL M&S CE from UW: Mechanical Engineer	342	31,102	37,855
		Floor Auxiliary Equipment - Procurement and contra Total					342	31,102	37,855
	WC2060	Floor Auxiliary Equipment - Fabrication	10/22/2019	12/15/2020	300	BNL M&S CE from UW: Mechanical Engineer	342	31,102	39,063
		Floor Auxiliary Equipment - Fabrication Support Total					342	31,102	39,063
	WC2062	Floor Auxiliary Equipment - Fabrication	10/22/2019	12/15/2020	300	BNL M&S CE Costs		777,396	992,603
		Floor Auxiliary Equipment - Fabrication Total						777,396	992,603
	WC2080	Floor Auxiliary Equipment - Install on d	12/15/2020	3/9/2021	60	BNL M&S CE from UW: Mechanical Engineer	343	31,156	39,998
		Floor Auxiliary Equipment - Install on detector Total					343	31,156	39,998
130.04.02.04.02 Floor Auxiliary Equipment Total							**1,715**	**1,053,846**	**1,307,519**
Grand Total							**1,715**	**1,053,846**	**1,307,519**

LBNE	**LBNE Water Cherenkov Detector** **BASIS of ESTIMATE FORM (BoE)**	**Date of Estimate:** **Revision #: 2** **Prepared By: R. Paulos** **Approved By:** **Level 2 Manager**

WBS Number: **130.04.02.05**	**WBS Title:** **Water Volume**

WBS Dictionary:
This is all the items that have to do with water except for the water itself.

Cost Type **(check all that apply):** _x_ EDIA Material _x_ EDIA Labor _x_ MFG Material _x_ MFG Labor	**Costing Method** **(check all that apply):** _x_ Engineering Judgment ___Physicist Estimate ___ Level of Effort _x_ Vendor Quote (attached) _x_ Catalog Price (specify) ___ Prior purchase ___ Prior experience ___ Parametric Estimate ___ Other- Description:_____

Attach Relevant Documents (including but not limited to):

M&S Contingency (%)**: 20**	**Labor Contingency** (%)**: 20**

Basis of Estimate
Details of Estimate The material costs of the water distribution, collection and thermal management consist primarily of pipe and pipe fittings, pipe hangers, valves, instrumentation, and deck thermal insulation. WBS 130.4.2.5.1 Water Distribution The piping components specified for the water distribution system are based on the conceptual design described in the WCD CDR. The pipes and fittings required have been estimated and are summarized in the attached table. The original materials estimate was developed for a 100 kT detector and has been scaled up for a 200 kT system by the appropriate height and area factors (i.e. 1.3 and 1.5). The distribution system piping is currently specified as polypropylene as recommended by LBNE WCD materials experts. Costs for the pipe and fittings are taken from the Aetna Plastics on-line catalog (http://www.aetnaplastics.com/products/d/Polypropylene). Rental costs of the polypropylene welder were obtained via a phone inquiry to Aetna Plastics Manufacturer (1-800-343-3618). The time estimates for the pipe welding are based on information at the ASAHI-America Inc. website (http://www.asahi-america.com/documents/documents/Asahi-English/Maxiplast%20Welding%20Parameters%209.1.07%20Rev%20A.pdf). The heating and cooling times for the fusion welding are given in the tables. Set up times are added and are based on engineering judgment. Use of the Maxiplast welder is assumed for pipes at six inch diameter or smaller. The Field 12 W4900 welder is assumed for the eight inch pipe. The times are used to estimate the rental charges for the fusion welders. Prices for the piping supports are a combination of costs from Unistrut (http://www.unistrut.com/) and the Aetna Plastics website as shown above. The stainless steel valves to be used at the penetrations at the 5060L are estimated from the Apollo Valves website (http://www.apollovalves.com/products/products.asp?sub=19). The labor estimates included in the costing spreadsheet include the time required for engineering design and drafting of the water distribution system at the various stages of the project. The design work will include pipe and manifold sizing. The routing to various water system components will be determined. The estimates include all of the engineering and designer effort needed for prototyping and testing, material specification and procurement, fabrication of subassemblies and installation supervision. WBS 130.4.2.5.2 Water Collection The piping used for vessel leak drainage and ground water drainage can be routed through conventional PVC piping. The lengths and fittings required have been estimated and are summarized below. The PVC is priced as common PVC piping available from any hardware store. Engineering and Designer labor estimates have been made for the all the phases of the project and are included in the Water Volume costing report. WBS 130.4.2.5.3 Thermal Management A resistance temperature detector (RTD) and a paddlewheel flow meter will be installed in each of the 60 inlet and outlet pipes to ensure uniform temperature and flow distribution. The flow meters are essential to detect flow blockages or involuntary pump shutdowns. In addition, 60 RTDs and pressure transducers will be arranged along the vertical wall of the vessel. A mobile probe with thermistors and pressure transducers will be lowered from the deck into the vessel to explore conditions before neutrino detection begins.

Insulation will be used between the deck and the water vessel to limit the transfer of heat from the warm deck area at room temperature to the cool water at approximately 13oC. The insulation estimate is based on the material cost of 3 inches of extruded polystyrene sheet which has long life, is not biologically active, and is very resistant to wet environments.

The technical work to be performed by an RPI Graduate student includes:

1. Analysis of Conduction, Flow, and transient effects in vessel
2. Analysis of water flow and heat transfer
3. Finalize inlets and exits, insulation
4. Build and test mobile monitoring equipment
5. Order sensors and hire contractors
6. Build mobile sensing units
7. Guide installation of test equipment

Materials list and cost -

Water Piping, etc.	Size	Pipe Cost/ft	Length req'd, m	Length req'd, ft	Piping Cost	Elbow Cost each	# req'd	Elbow Cost	Tee Cost each	# req'd	Tee Cost	Reducer Cost each	# req'd	Reducer Cost	Size	Sub total
Aetna Polypropylene, SDR 11, 150 psi rating	http://www.aetnaplastics.com/Products/ProcessSystems/PlasticandFRPPiping/Polypropylene															
Top Manifold	8"	$ 50.17	165	541.3	$ 27,158.63	$ 291.40	8	$ 2,331.20	$ 487.90	20	$ 9,758.00	$ 179.10	28	$ 5,014.80	8"	$ 44,262.63
	6"	$ 34.95	167	547.9	$ 19,148.88	$ 161.20		$ -	$ 263.80	15	$ 3,957.00	$ 140.80	7	$ 985.60	6"	$ 24,091.48
	4"	$ 15.17		0.0	$ -	$ 70.20		$ -	$ 95.70		$ -	$ 54.50	0	$ -	4"	$ -
	2"	$ 5.76	16	52.5	$ 302.36	$ 18.40	25	$ 460.00	$ 21.20		$ -	$ 18.60	0	$ -	2"	$ 762.36
Top Manifold Total																$ 69,116.47
Bottom Manifold	8"	$ 50.17	165	541.3	$ 27,158.63	$ 291.40	8	$ 2,331.20	$ 487.90	20	$ 9,758.00	$ 179.10	28	$ 5,014.80	8"	$ 44,262.63
	6"	$ 34.95	167	547.9	$ 19,148.88	$ 161.20		$ -	$ 263.80	15	$ 3,957.00	$ 140.80	7	$ 985.60	6"	$ 24,091.48
	4"	$ 15.17		0.0	$ -	$ 70.20		$ -	$ 95.70		$ -	$ 54.50	0	$ -	4"	$ -
	2"	$ 5.76	16	52.5	$ 302.36	$ 18.40	25	$ 460.00	$ 21.20		$ -	$ 18.60	0	$ -	2"	$ 762.36
Bottom Manifold Total																$ 69,116.47
Vertical piping runs	8"	$ 50.17	288	944.9	$ 47,404.15	$ 284.20	8	$ 2,273.60	$ 487.90		$ -		0	$ -	8"	$ 49,677.75
	6"	$ 34.95	93	305.1	$ 10,663.75	$ 161.20	2	$ 322.40	$ 263.80	1	$ 263.80		0	$ -	6"	$ 11,249.95
	4"	$ 15.17		0.0	$ -	$ 70.20		$ -	$ 95.70		$ -		0	$ -	4"	$ -
	2"	$ 5.76		0.0	$ -	$ 18.40		$ -	$ 21.20		$ -		0	$ -	2"	$ -
Vertical piping runs Total																$ 60,927.70
												Valves				
Vessel Fill Return Manifold	8"	$ 50.17	167	547.9	$ 27,487.82	$ 284.20		$ -	$ 487.90	6	$ 2,927.40		0	$ -	8"	$ 30,415.22
	6"	$ 34.95		0.0	$ -	$ 161.20		$ -	$ 263.80		$ -		0	$ -	6"	$ -
	4"	$ 15.17	338	1108.9	$ 16,822.17	$ 70.20	6	$ 421.20	$ 95.70	31	$ 2,966.70		0	$ -	4"	$ 20,210.07
	2"	$ 5.76		0.0	$ -	$ 18.40		$ -	$ 21.20		$ -		0	$ -	2"	$ -
	Valves											$ 750.00	30	$22,500.00		$ 22,500.00
Vessel Fill Return Manifold Total																$ 73,125.29
Detector Drain Line	8"	$ 50.17		0.0	$ -	$ 284.20		$ -	$ 487.90		$ -			$ -	8"	$ -
	6"	$ 34.95	32	105.0	$ 3,669.25	$ 161.20	3	$ 483.60	$ 263.80		$ -			$ -	6"	$ 4,152.85
	4"	$ 15.17		0.0	$ -	$ 70.20		$ -	$ 95.70		$ -			$ -	4"	$ -
	2"	$ 5.76		0.0	$ -	$ 18.40		$ -	$ 21.20		$ -			$ -	2"	$ -
Detector Drain Line Total																$ 4,152.85

		# Elbows	x2	# Elbow welds	# Tees	x3	# Tee welds	# Reducers	x2	# Reducer welds	Total # of welds	Time per weld, minutes	Weeks PP Welder is required, 24/5	Rental Rate of PP Welder per week	Weeks rented based on 24/5 work schedule	PP Welder Rental Sub Total
Polypropylene Welder Rental	8"	24		48	46		138	56		112	298	35	1.45	$ 630.00	2	$ 1,260.00
	6"	5		10	31		93	14		28	131	30	0.55	$ 300.00	2	$ 600.00
	4"	6		12	31		93	0		0	105	25	0.36	$ 300.00	*	
	2"	50		100	0		0	0		0	100	20	0.28	$ 300.00	*	
Polypropylene Welder Rental Total														* included in 6" time		$ 1,860.00

		SS unistrut cost/ft	Length req'd each, ft	# req'd	Total Length req'd, ft	SS unisrut cost	Nuts/Bolts /Fittings cost	# req'd	N/B/F cost	hangers cost each	# req'd	hangers cost	Sub Total
Piping Supports	8"	$ 5.00	5	206	1030	$ 5,150.00	$ 50.00	206	$ 10,300.00	$ 59.10	206	$ 12,174.60	$ 27,624.60
	6"	$ 5.00	5	143	715	$ 3,575.00	$ 50.00	143	$ 7,150.00	$ 37.60	143	$ 5,376.80	$ 16,101.80
	4"	$ 5.00	5	169	845	$ 4,225.00	$ 50.00	169	$ 8,450.00	$ 19.30	169	$ 3,261.70	$ 15,936.70
	2"	$ 5.00	5	12	60	$ 300.00	$ 50.00	12	$ 600.00	$ 15.80	12	$ 189.60	$ 1,089.60
Piping Supports Total													$ 60,752.70

		# req'd	SS Pipe length each	SS Pipe cost/ft	SS Pipe cost	# req'd	SS Valve cost each	Total Valves cost	Sub Total
5060L Penetrations	8"	7	6	$ 88.00	$ 3,696.00	7	$9,200.00	$ 64,400.00	$ 68,096.00
	6"	2	6	$ 53.70	$ 644.40	2	$6,100.00	$ 12,200.00	$ 12,844.40
	4"						$2,500.00		
	2"						$1,200.00		
5060L Penetrations Total							Apollo 87A-200		$ 80,940.40

Schematic:

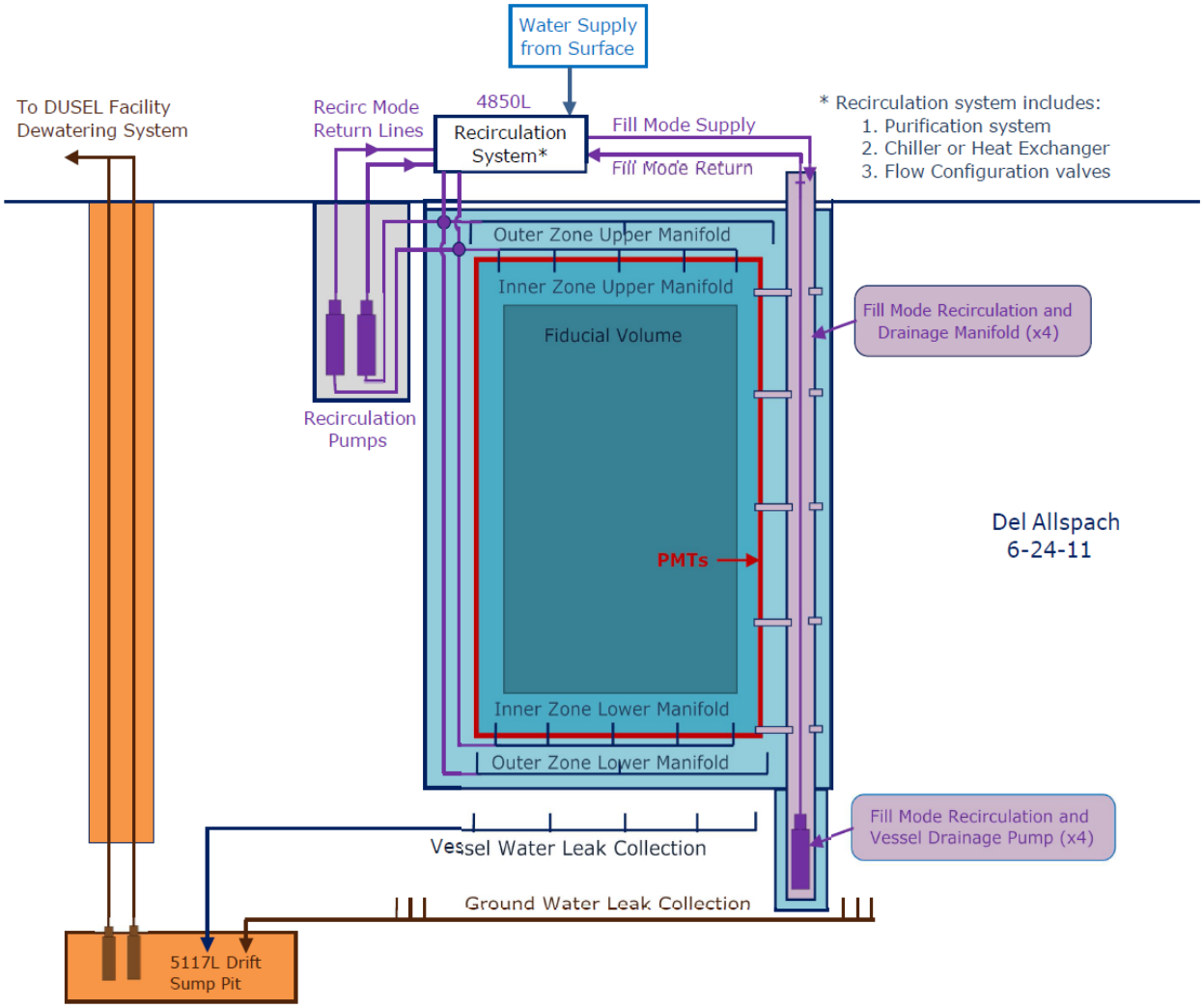
Water Supply from Surface
To DUSEL Facility Dewatering System
Recirc Mode Return Lines
4850L
Recirculation System*
Fill Mode Supply
Fill Mode Return
* Recirculation system includes:
1. Purification system
2. Chiller or Heat Exchanger
3. Flow Configuration valves
Outer Zone Upper Manifold
Inner Zone Upper Manifold
Fiducial Volume
Fill Mode Recirculation and Drainage Manifold (x4)
Recirculation Pumps
Del Allspach
6-24-11
PMTs
Inner Zone Lower Manifold
Outer Zone Lower Manifold
Fill Mode Recirculation and Vessel Drainage Pump (x4)
Vessel Water Leak Collection
Ground Water Leak Collection
5117L Drift Sump Pit

130.04.02.05 Water Volume

WBS LEVEL 5	ACTIVITY ID	ACTIVITY DESCRIPTION	START DATE	FINISH DATE	DURATION	RESOURCE	HOURS	COST	TOTAL with Escalation
130.04.02.05.01 Water Distribut	WC2120	Water Distribution - Conceptual design	4/7/2010	1/19/2011	197	FNAL M&S CP from UV: Sr. Scientific Personnel	942	942	965
						FNAL M&S CS Travel		3,000	3,458
						Mechanical Designer	343	11,671	34,738
		Water Distribution - Conceptual design Total					1,284	15,613	39,161
	WC2130	Water Distribution - Preliminary design	12/20/2012	12/19/2014	498	FNAL M&S CP from UV: Sr. Scientific Personnel	344	344	369
						FNAL M&S CS Travel		7,998	9,990
						Mechanical Designer	344	11,700	37,196
		Water Distribution - Preliminary design Total					687	20,041	47,555
	WC2140	Water Distribution - Final design	12/22/2014	12/7/2016	498	FNAL M&S CP from UV: Sr. Scientific Personnel	857	857	969
						FNAL M&S CS Travel		7,002	9,220
						Mechanical Designer	857	29,165	97,758
		Water Distribution - Final design Total					1,713	37,023	107,948
	WC2160	Water Distribution - Prototype and test	12/8/2016	4/24/2017	98	FNAL M&S CE Costs		43,000	50,448
						FNAL M&S CP from UV: Sr. Scientific Personnel	342	342	401
						Mechanical Designer	172	5,839	20,258
		Water Distribution - Prototype and test Total					514	49,182	71,106
	WC2170	Water Distribution - Procurement and c	4/25/2017	9/11/2017	100	BNL M&S CE from RP: Post Doc	103	5,234	6,039
						FNAL M&S CP from UV: Sr. Scientific Personnel	171	171	200
						FNAL M&S CS Travel		10,000	13,629
		Water Distribution - Procurement and contracts Sup Total					274	15,405	19,868
	WC2175	Water Distribution - Procurement and c	4/25/2017	9/11/2017	100	BNL M&S CE Costs		183,960	215,822
						FNAL M&S CE Costs		589,000	691,015
		Water Distribution - Procurement and contracts Total						772,960	906,836
	WC2180	Water Distribution - Fabrication	2/19/2019	4/14/2020	300	FNAL M&S CP from UV: Sr. Scientific Personnel	855	855	1,070
						FNAL M&S CS Travel		20,001	29,112
						Mechanical Designer	171	5,822	21,573
		Water Distribution - Fabrication Total					1,026	26,678	51,755
	WC2200	Water Distribution - Install on detector	6/23/2020	8/18/2020	40	FNAL M&S CP from UV: Sr. Scientific Personnel	428	428	543
						FNAL M&S CS Travel		50,000	73,813
		Water Distribution - Install on detector Total					428	50,428	74,356

130.04.02.05.01 Water Distribution Total							**5,926**	**987,330**	**1,318,585**
130.04.02.05.02 Water Collectio	WC2220	Water Collection - Conceptual design	1/28/2015	11/12/2015	200	FNAL M&S CP from UV: Sr. Scientific Personnel	376	376	419
						FNAL M&S CS Travel		5,000	6,486
						Mechanical Designer	136	4,631	15,291
		Water Collection - Conceptual design Total					512	10,007	22,196
	WC2230	Water Collection - Preliminary design	11/17/2015	8/30/2016	200	FNAL M&S CP from UV: Sr. Scientific Personnel	172	172	196
						FNAL M&S CS Travel		5,000	6,636
						Mechanical Designer	172	5,856	19,782
		Water Collection - Preliminary design Total					344	11,028	26,614
	WC2240	Water Collection - Final design	8/30/2016	6/6/2017	200	FNAL M&S CP from UV: Sr. Scientific Personnel	172	172	201
						FNAL M&S CS Travel		5,000	6,793
						Mechanical Designer	172	5,856	20,251
		Water Collection - Final design Total					344	11,028	27,244
	WC2260	Water Collection - Prototype and test	6/6/2017	3/13/2018	200	FNAL M&S CP from UV: Sr. Scientific Personnel	68	68	81
						FNAL M&S CS Travel		2,500	3,461
						Mechanical Designer	68	2,316	8,159
		Water Collection - Prototype and test Total					136	4,884	11,700
	WC2270	Water Collection - Procurement and co	3/13/2018	6/5/2018	60	FNAL M&S CP from UV: Sr. Scientific Personnel	34	34	41
						Mechanical Designer	34	1,164	4,149
		Water Collection - Procurement and contracts Total					68	1,199	4,190
	WC2280	Water Collection - Fabrication	6/5/2018	3/12/2019	200	FNAL M&S CE Costs		10,000	12,237
						FNAL M&S CP from UV: Sr. Scientific Personnel	172	172	210
						Mechanical Designer	68	2,316	8,379
		Water Collection - Fabrication Total					240	12,488	20,827
	WC2300	Water Collection Installation	8/18/2020	11/10/2020	60	FNAL M&S CE Costs		5,000	6,432
						FNAL M&S CP from UV: Sr. Scientific Personnel	86	86	110
						Mechanical Designer	34	1,165	4,432
		Water Collection Installation Total					120	6,250	10,974
130.04.02.05.02 Water Collection Total							**1,764**	**56,883**	**123,746**
130.04.02.05.03 Thermal Manag	WC2320	Thermal Management - Conceptual des	2/2/2015	11/17/2015	200	BNL M&S CE from RP: Post Doc	2,848	144,715	159,010
						BNL M&S CE from RP: Travel		49,140	54,897
		Thermal Management - Conceptual design Total					2,848	193,855	213,908
	WC2330	Thermal Management - Preliminary des	11/17/2015	8/30/2016	200	BNL M&S CE from RP: Post Doc	890	45,223	50,813
						BNL M&S CE from RP: Travel		15,120	17,273

130.04.02.05.03 Thermal Manag	WC2330	Thermal Management - Preliminary design Total					890	60,343	68,086
	WC2340	Thermal Management - Final design	8/30/2016	6/6/2017	200	BNL M&S CE from RP: Post Doc	890	45,223	52,017
						BNL M&S CE from RP: Travel		15,120	17,682
		Thermal Management - Final design Total					890	60,343	69,699
	WC2360	Thermal Management - Prototype and	6/6/2017	3/13/2018	200	BNL M&S CE from RP: Post Doc	890	45,223	53,000
		Thermal Management - Prototype and test Total					890	45,223	53,000
	WC2370	Thermal Management - Procurement a	3/13/2018	6/5/2018	60	BNL M&S CE from RP: Post Doc	52	2,621	3,107
		Thermal Management - Procurement and contracts Total					52	2,621	3,107
	WC2380	Thermal Management - Fabrication	6/5/2018	3/12/2019	200	BNL M&S CE from RP: Post Doc	1,424	72,357	87,091
						BNL M&S CE from RP: Travel		22,680	27,754
		Thermal Management - Fabrication Total					1,424	95,037	114,845
	WC2400	Thermal Management - Install on detec	8/18/2020	11/10/2020	60	BNL M&S CE from RP: Post Doc	486	24,695	31,251
						BNL M&S CE from RP: Travel		18,900	24,315
		Thermal Management - Install on detector Total					486	43,595	55,567
130.04.02.05.03 Thermal Management Total							**7,480**	**501,019**	**578,211**
Grand Total							**15,170**	**1,545,232**	**2,020,542**

	LBNE Water Cherenkov Detector **BASIS of ESTIMATE FORM (BoE)**	**Date of Estimate:** **Revision #: 2** **Prepared By: Robert Paulos/D. Warner** **Approved By:** **Level 2 Manager**

WBS Number: **130.04.02.06**	**WBS Title:** **PMT Supports (PIU)**

WBS Dictionary:

This includes all support and installation elements that allow for attachment of PMTs inside the water volume. It does not include the PMT assembly itself.

Cost Type **(check all that apply):** __x_ EDIA Material __x_ EDIA Labor __x_ MFG Material __x_ MFG Labor	**Costing Method** **(check all that apply):** __x_ Engineering Judgment ___Physicist Estimate ___ Level of Effort __x_ Vendor Quote (attached) __x_ Catalog Price (specify) ___ Prior purchase ___ Prior experience ___ Parametric Estimate ___ Other- Description:_____

Attach Relevant Documents (including but not limited to):

M&S Contingency (%)**: 40%**	**Labor Contingency** (%)**: 30%**

Basis of Estimate

Details of Estimate:

This estimate covers the process of PIU development from Preliminary Design through Final Design and into production. The design process includes close interfaces with development of the PMT Assembly (PA) (WBS 1.4.3.8), the WCD vessel, deck, and floor, as well as detector installation procedures, cabling, and other integration issues. To accommodate this, two intermediate design and prototype iterations are included in the design program, allowing for required modifications to the PIU system to accommodate changes in these interfacing elements.

There are three main types of PIU Assemblies. All PIU types accommodate a single core PA design, but each type has component parts unique to three different mounting regions within the detector. The three types are:

1. Wall PIU Assembly
2. Floor PIU Assembly
3. Deck PIU Assembly

All of the wall PAs will be supported by the Linear PIU scheme, in which a column of 89 PAs is supported by two cables that are pre-tensioned between top and bottom anchor points. Signal cables are routed up and secured to the support cables.

Each Linear PIU column is made up of the following primary components:

1. Bottom Ring Truss: Distributes the net upward load from tension in 460 cables to 46 anchor penetrations into the vessel floor.
2. Support Cables and Rigging: The support cables are likely to be stainless steel wire rope, 3/8" to 1/2" inch diameter. Cables will be pre-tensioned on the order of 50 kgf and securely anchored at top and bottom. Pre-tensioning will be accomplished by means of stainless steel turnbuckles and springs attached to the top of the cables and the upper ring truss.
3. Upper Ring Truss: Distributes the net downward load from tension in 460 cables to 46 support corbels at the balcony/rock interface.
4. PMT Assemblies (PAs): Each PA includes a PMT, encapsulated base, housing, and cable assembly
5. Signal Cables: The signal cables for all PAs on a column are divided between the two support cables and travel up to the balcony. All of the floor PA signal cables are also evenly distributed amongst the Linear PIU support cables.
6. Light Barrier: Opaque barrier to fill the space between PMTs and positioned at or near the PMT's equator. This barrier defines the sensitive volume and isolates it from local background radiation.

The Floor PIUs will consist of light stainless steel frames supporting two PAs and providing utilities routing for the floor PAs to the sides of the detector, where they will be routed up the Linear PIU support cables to the deck region. The light frames will be mounted to a stainless steel I-beam frame attached in several locations which will support the buoyant load from the PAs. The steel frame allows us to minimize the number of anchor points required to support the buoyant load.

The Deck PIUs will consist of similar (or possible identical) light stainless steel frames which will mount to the

lower flanges of the deck support beams. An similar structure of stainless steel beams will be required to bridge the gaps between the deck beams.

The Floor and Deck PIU systems will consist of the following components:

1. Stainless Steel Support Frame.
2. Stainless Sheet Steel to support 4 PAs per frame.
3. Cable trays for routing PA cables.
4. Light Barrier. Opaque barrier to fill the space between PMTs and positioned at or near the PMT's equator.

While every effort is made to minimize the differences between these components, there will be dedicated design, procurement and fabrication expenses associated with each of the major design elements for each of the mounting regions.

Development and writing of manufacture assembly and process procedures is required to implement the Project Quality Assurance Plan for the PIUs. Identification of tooling, special processes such as PA handling and PIU packaging are within the scope of this effort. Engineering and technician tasks during the transition from final design to procurement and production include coordination of transfer of all data and equipment, training of manufacture and QA personnel on the procedures.

Labor Details

The PIU project can be divided into 2 main categories: Design and Development (roughly FY10 – FY13) and Procurement and Fabrication (FY14 – FY18).

Design and Development:

This phase encompasses expenditures for design and engineering efforts associated with designing the PIU design elements and assemblies, as well as support efforts such as meetings and travel. The responsibilities and tasks of the four job functions are:

1. Engineer - engineering design, engineering analysis, vendor coordination including supplier visits, material selection and specification, configuration management, test development plans and reports, test coordination, assembly procedures and specification
2. Designer - Computer-Aided Design (CAD) modeling, CAD drawing creation, file and configuration management (shared responsibility with Engineer)
3. Engineering Manager - design oversight, cost and schedule reporting, design review, drawing review and approval, configuration management, vendor coordination including contracts management
4. Mechanical Technician - procurement of prototype parts and materials, prototype fabrication, and assist with assembly procedures development.

The distribution of labor hours for the design and prototyping phases are broken out by FY, design category and labor category in Appendix A.

Procurement and Fabrication Labor:

Procurement and Production from the Final Design Phase to Installation support is estimated for a Level of Effort as follows:

1. Mechanical Engineer to provide liaison engineering support to the production facility throughout production. In FY14 this includes coordination of all data and equipment for PIU manufacturing to the production facility. This level of effort decreases during the majority of production, until increasing to provide liaison engineering support for PIU installation in the Detector.
2. Mechanical Engineering Manager to provide project cost and schedule reporting, maintenance of contracts, of PIU production activity, as well as to document the PIU QA program.
3. Mechanical Designer to provide PIU configuration controls and drawing change control for production activities during PIU manufacturing from FY14 through FY17.
4. Lead Mechanical Technician to lead a PIU receiving, cleaning, final assembly, and packaging and shipping effort.
5. Mechanical technician to assist the lead technician with his duties.

Material Details

Detailed cost breakdown of Linear PIU material and supplies is provided in Appendix B.

The Deck and Floor PIU core component part costs are on a per-PIU basis (4 PAs), and are based on the following (referenced quotes are provided in Appendix C):

1. Stainless Steel Support Frame Material: Please reference quote from Ryerson. To summarize:

Quote line no.	Qty	Price/Item	Price
10	2	$13.20	$26.40
20	2	$20.27	$40.54
30	2	$8.30	$16.60
			$83.54

2. PIU Frame Welding – This is the cost for welding all the components of PIU frame. Please check the attached quote from Gaum Inc. The cost is $119.56.
3. Cable Tray – Secondary structural member to support PA cables which can be procured via vendor specification. Cost estimate for cable tray is $25.
4. Stainless Sheet Steel – material, cutting, bending, and fastening estimated at total of $80
5. Light Barrier – membrane that divides the PMT photon sensitive face from detector outer volume. Cost estimate for this is $25.
6. PIU Brackets: PIU Brackets are components used as interface between PIU and anchor locations at the Floor and Deck. Each bracket will be shared by 4 PIUs so cost per PIU for brackets comes out be $10.

Assumptions/Interfaces

Constraints

Comments

APPENDIX A

The distribution of labor hours for the design and prototyping phases are broken out by FY, design category and labor category Tables A1 – A4:

Table A1: Conceptual Design Labor Breakdown

Conceptual Design Labor															
		FY 2010					FY 2011					FY 2011			
		Mgt. E.	Mech. E.	MD	Tech		Mgt. E.	Mech. E	Mech. D.	Tech		Mgt. E.	Mech. E	Mech. D.	Tech
Vessel Wall PIU															
	PIU Frame		40	120	40			40	120	40					
	Light Barrier Sys.		10	30	20			10	30	20					
	Anchor Brackets		10	30	20			10	30	20					
	Cable Tray		10	30	20			10	30	20					
	Assemble & test		10	30	20			10	30	20					
	Alt. wall design		40	160	40			40	160	40					
	Project manag.	320					360								
Sub-total		320	120	400	160		360	120	400	160		0	0	0	0
Deck PIU															
(Inc. Annular & Special)															
	PIU Frame							40	40	40					
	Light Barrier Sys.							40	40	40					
	Anchor Brackets							40	40	40					
	Cable Tray							20	20	20					
	Assemble & test							20	20	20					
	Project manag.						160								
Sub-total		0	0	0	0	0	160	160	160	160		0	0	0	0
Floor PIU															
(Inc. Annular & Special)															
	PIU Frame												40	40	30
	Light Barrier Sys.												20	20	20
	Anchor Brackets												40	40	30
	Cable Tray												40	40	20
	Assemble & test												20	20	20
	Project manag.											160			
Sub-total		0	0	0	0	0	0	0	0	0		160	160	160	120
TOTAL		320	120	400	160	0	520	280	560	320		160	160	160	120

Table A2: Preliminary Design Labor Breakdown

Preliminary Design Labor															
		FY 2011					FY 2012					FY 2013			
		Mgt. E.	Mech. E.	MD	Tech		Mgt. E.	Mech. E	Mech. D.	Tech		Mgt. E.	Mech. E	Mech. D.	Tech
Vessel Wall PIU															
	PIU Frame		80	240	120										
	Light Barrier Sys.		40	80	20										
	Anchor Brackets		40	80	20										
	Cable Tray		20	80	20										
	Assemble & test		20	80	20										
	Alt. wall design		120	240	120										
	Project manag.	480													
Sub-total		480	320	800	320		0	0	0	0		0	0	0	0
Deck PIU															
(Inc. Annular & Special)															
	PIU Frame							80	80	40					
	Light Barrier Sys.							40	40	40					
	Anchor Brackets							40	40	20					
	Cable Tray							20	60	10					
	Assemble & test							60	20	10					
	Project manag.						240								
Sub-total		0	0	0	0	0	240	240	240	120		0	0	0	0
Floor PIU															
(Inc. Annular & Special)															
	PIU Frame							20	40	40			10	20	20
	Light Barrier Sys.							10	20	20			10	40	20
	Anchor Brackets							20	40	10			40	20	20
	Cable Tray							10	10	10			0	20	0
	Assemble & test							20	10	0			20	20	20
	Project manag.						80					120			
Sub-total		0	0	0	0	0	80	80	120	80		120	80	120	80
TOTAL		480	320	800	320	0	320	320	360	200		120	80	120	80

Table A3: Final Design Labor Breakdown

Final Design Labor														
		FY 2012				FY 2013				FY 2014			
		Mgt. E.	Mech. E.	MD	Tech	Mgt. E.	Mech. E	Mech. D.	Tech	Mgt. E.	Mech. E	Mech. D.	Tech
Vessel Wall PIU													
	PIU Frame		80	200	80		80	200	80				
	Light Barrier Sys.		40	40	20		40	40	20				
	Anchor Brackets		40	40	20		40	40	20				
	Cable Tray		40	40	20		40	40	20				
	Assemble & test		40	80	20		40	80	20				
	Project manag.	480				480							
Sub-total		480	240	400	160	480	240	400	160	0	0	0	0
Deck PIU													
(Inc. Annular & Special)													
	PIU Frame		40	40	20		20	20	20				
	Light Barrier Sys.		20	40	10		10	20	10				
	Anchor Brackets		40	20	20		20	20	10				
	Cable Tray		10	10	10		20	20	10				
	Assemble & test		10	10	20		10	40	10				
	Project manag.	120				80							
Sub-total		120	120	120	80	80	80	120	60	0	0	0	0
Floor PIU													
(Inc. Annular & Special)													
	PIU Frame						20	20	10		10	20	10
	Light Barrier Sys.						10	10	10		10	10	10
	Anchor Brackets						20	20	10		10	20	0
	Cable Tray						10	10			0	10	10
	Assemble & test						20	20	10		10	20	10
	Project manag.					120				40			
Sub-total		0	0	0	0	120	80	80	40	40	40	80	40
TOTAL		600	360	520	240	680	400	600	260	40	40	80	40

Table A4: Prototype and Test Labor Breakdown

Prototype and Test Labor					
		FY 2014			
		Mgt. E.	Mech. E	Mech. D.	Tech
Vessel Wall PIU					
	PIU Frame		40	120	160
	Light Barrier Sys.		20	60	120
	Anchor Brackets		20	40	80
	Cable Tray		10	20	40
	Assemble & test		30	80	80
	Project manag.	400			
Sub-total		400	120	320	480
Deck PIU					
(Inc. Annular & Special)					
	PIU Frame		10	10	20
	Light Barrier Sys.		10	10	20
	Anchor Brackets		10	10	10
	Cable Tray		0	0	10
	Assemble & test		10	10	20
	Project manag.	80			
Sub-total		80	40	40	80
Floor PIU					
(Inc. Annular & Special)					
	PIU Frame		10	10	20
	Light Barrier Sys.		10	10	20
	Anchor Brackets		10	10	10
	Cable Tray		0	0	10
	Assemble & test		10	10	20
	Project manag.	80			
Sub-total		80	40	40	80
TOTAL		560	200	400	640

APPENDIX B

Detailed cost breakdown of Linear PIU material and supplies, shown here for representative purposes only. For more resolution refer to actual LPIU BOE Details spreadsheet.

This is the parameter section for	29000	12" HQE PMTs, 1 cavern, 200 kT, no vessel, liner on shotcrete						
								miss by
Strings:	232	PA's per string:	88	Total wall PA's:	20416		20521	-105
					floor nom		4239	
					deck nom		4239	
					check		28999	
Deployment teams:	4							
which is 3 active plus sparing of almost all requirements								
structural cable unit cost	$1.20	per foot	based on	cable mfr quote, on 75000' qty order				
structural cable length each	273.224	feet						
polypropylene guide rope	$0.1042	per foot	based on	McMaster				
ring truss polygon size	58	vertices						

color code of cells: gray, formula, don't change; pink, value needed; green, placeholder, replace with value used for reference

Part	Total count (mostly without spares)	Cost Each	Labor/Misc Weighing Factor	Cost Total	Material Quantity - Each	Unit	Notes	Description
Deployment materials	232			$0				
left support cable assy, with sleeves, top & bottom termination fittings	232	37.63	1.1	$9,602		ea	cost shown on this line is based on $12040 vendor figure for degreasing and shipping 75000ft of cable. add labor & materials for testing & tagging, and any other fab work by vendor	
cable, 10,000 pound strength, 3xx SS, in 220' (67m) lengths	232	327.87	2	$152,131		ea	cable goes from turnbuckle at top end (~balcony level, 4838L) to top of ring truss, ~5056L; allow a foot or two for termination & margin)	left lay. Matl cost was a distributor's price, for 7x19 regular right lay. Uncoated & unlubricated.
sleeves to support PA's on support cables	10208	8.64	2	$176,394		ea	1 sleeve per PA supported	US Cargo control.com #SS316SLEEVE3/8
top & bottom termination thimbles	464	3.49	2	$3,237		ea	1 thimble per end per cable	US Cargo Control.com # HDTSS304PC3/8 heavy duty thimble
top & bottom termination sleeves	928	8.64	2	$16,036		ea	2 sleeves per end per cable	US Cargo control.com #SS316SLEEVE3/8
				$0				
right support cable assy, with sleeves, top & bottom fittings	232	37.63	1.1	$9,602		ea	cost shown on this line is based on $12040 vendor figure for degreasing and shipping 75000ft of cable. add labor & materials for testing & tagging, and any other fab work by vendor	
cable, 10,000 pound strength, 3xx SS, in 220' lengths	232	327.87	2	$152,131		ea	cable goes from turnbuckle at top end (~balcony level, 4838L) to top of ring truss, ~5056L; allow a foot or two for termination & margin)	right lay. Matl cost was a distributor's price, for 7x19 regular right lay. Uncoated & unlubricated.
sleeves to support PA's on support cables	10208	8.64	2	$176,394		ea	1 sleeve per PA supported	US Cargo control.com #SS316SLEEVE3/8
top & bottom termination thimbles	464	3.49	2	$3,237		ea	1 thimble per end per cable	US Cargo Control.com # HDTSS304PC3/8 heavy duty thimble
top & bottom termination sleeves	928	8.64	2	$16,036		ea	2 sleeves per end per cable	US Cargo control.com #SS316SLEEVE3/8
				$0				
cable shipping/deployment spool	464	20.00	1	$9,280		ea		
pear shaped quicklink	464	22.65	1.5	$15,764		ea	1/2" with nominal working load limit 3300lb	stainless steel direct.com ss0160-pr12 316ss
retention pin (PA onto support cable)	81664	0.27	1.5	$32,461		ea		plastic self retaining (flex barbs on tip); polypro
cable tie, DI compatible	20416	0.25	3	$15,312	1	ea	will hold over 70 1/4" diameter cables; next size up will hold over 200	polypropylene cable ties; was McMaster Carr 1853T61 reusable 304SS, max 2.31" bundle diameter; 0.75" wide band at .69 each
bottom ring truss	1			$0		ea	lots of similar weldments, assembled into a regular polygon in the cavern	
in cavern assembly, survey etc labor	1	40,120.00	1	$40,120				2 men 2 months each at dusel rate
shipping				$0				
top bar prefab weldment	58		3	$0				this weldment is done at factory
end plate	116	6.13	3	$2,135			6x4"x1/2" plate 304ss	
i-beam	58	733.08	2	$85,037			6"x3.33" 304ss Ibeam ~3m long	
cable tiepoint	696	3.20	3	$6,671			2x2.5" 304ss Tee 2" lg	
				$0				
diagonal members	232	314.39	2	$145,876			4"sqx1/4 wall 304ss ~1.5m long	cut & weld prep the ends, drill circulation holes before descent
base polygon bars	29	1,944.32	2	$112,770			6"sqx1/4 wall 304ss ~6.05m long	cut & weld prep the ends, drill circulation holes before descent
gussets	116	3.07	2	$712				
tiedown plates	29	81.79	3	$7,116			~12" sq 1" plate 304ss; 4 clearance through holes for permanent mounting; a few tapped through holes for fixturing/clamping use during field welds	holes drilled before descent
bolts, tiedown plates to load bulkheads	116	4.63	2	$1,074			as M20x60 SS from McMasterCarr	
shackle to connect PIU support cable to ring truss tie point	696	3.85	2	$5,359			316ss 1/2 ton rated, US cargo control Part # SPAS5/16SS	
rock bolt anchor point & liner penetration to anchor ring truss	29					ea	each anchor point location consists of 4 rock bolts, a connection plate, large diameter SS bulkhead, fastener complement, & liner penetration seal	
rock bolts, installed	116	100.00	1.5	$17,400			per Jack Fowler, a steel 2m long rock bolt with several tons of holding power is $100 installed. Four are assumed here	
steel bracket, grouted	29	300.00	1.5	$13,050			(this is outside of liner)	cost is ken's guess at this point
stainless load bulkhead toadstool	29	1,000.00	2	$58,000			design tbd; roughly a stout plate with bolting features down to grouted bracket, and above for ring truss attachment, with a thin lip for weld prep for liner continuation	cost is ken's guess at this point
stainless liner can	29	1,000.00	3	$87,000			roughly cylindrical liner extension from vessel floor to load bulkhead	cost is ken's guess at this point
bolts, bulkhead to rockbolt bracket	116	3.08	2	$715			assumed bluecoated steel M20x60	
liner cutout at rockbolt array	29	500.00	1	$14,500			incremental cost on what would otherwise be a solid pan	
upper tensioning assembly (turnbuckle with straight pins & cotter keys)	464	150.00	1.5	$104,400		ea	probably can get for less $ elsewhere; could also downrate	turnbuckle, jaw & jaw with pins & cotter keys; McMaster 3022T56, 6" adjustment, 5200 lb working load
safety drawbar springs & shackles	464	51.00	1.5	$35,496			if we need to add them, consider MCM 9630K77 as upper cost bound	
								increment on balcony structure?
installation of ring onto balcony				$40,120				
polygon side end plates	116	6.13	3	$2,135				
balcony polygonal rail for tiepoints	58	733.08	2	$85,037				
upper tiepoints attached to balcony rail	696	3.20	3	$6,671				
Light barrier subassy (per 100kt FV cavern)								
light barrier sheet	20416	16.00	1.5	$489,984	0.25	m²		
retention pin (light barrier onto PA housing face)	81664	0.27	1.5	$32,461	1.00	ea	alternate is 18-8 blind rivets at 12 cents each in 100 qty	plastic self retaining (flex barbs on tip); polypro
Subtotal per detector of wall PA deployment consumables (excluding PA's, light collector)				$2,181,457				
Linear PIU Deployment tooling (based on quantity calc tab)							There is one crew equivalent of sparing of all deployment tooling included in quantities here	
ring truss welding jig	1	8,000.00	1	$8,000				
PIU winch (one per cable being deployed)	8	37,500.00	1	$300,000				
Winch control system (one per crew)	4	2,000.00	1	$8,000				
PA cart	8	4,000.00	1	$32,000			capacity per cart ~56	
deck annulus work platform, mobile	3	15,000.00	1	$45,000				no spare platform
sheave assembly	4	5,000.00	1	$20,000				
bobbin cradle	6	6,000.00	1	$36,000				
bundle guide	16	750.00	1	$12,000				
cable grips	8		1	$0				include as safety precaution against winch brake or other failure
turnbuckle adjusting tools	16	50.00	1	$800			2 wrenches for adjusting turnbuckle, cotter key tools. Tools are conventional but equip with lanyards for floor liner damage prevention & personnel safety	
hoist cable	8		1	$0				
cable, 10,000 pound strength, 3xx SS, in 220' lengths	8	47.23	2	$756		ea	cable goes from turnbuckle at top end (~balcony level, 4838L) to top of ring truss, ~5056L; allow a foot or two for termination & margin)	right lay. Matl cost was a distributor's price, for 7x19 regular right lay. Uncoated & unlubricated.
top & bottom termination thimbles	16	3.49	2	$112		ea	1 thimble per end per cable	US Cargo Control.com # HDTSS304PC3/8 heavy duty thimble
top & bottom termination sleeves	32	8.64	2	$553		ea	2 sleeves per end per cable	
deployment weights	16	550.00	1	$8,800				
work platform track on level 1	1	8,052.00	2	$16,104				
work platform safety rails	4	1,200.00	2	$9,600				
platform tangential motion lock	3	1,000.00	2	$6,000				
radio handsets (one per crew member)	24	100.00	1.5	$3,600			assign a channel per deployment team; team leaders switch channels to coordinate with other teams if needed	Pricing is ~50% higher than FRS as a placeholder
guide rope	8	31.26	1.5	$375			amount shown is 2 lines 300' each per station	McMaster Carr #3837T18 3/8" Polypropylene twisted rope, 200lb working load limit
rope reel (for managing guide tethers for hoist hook or bottom weights)	8	150.00	1.5	$1,800			If we need a guide rope, making a pile of 200' of rope on the floor will lead to tangle issues & safety issues, so wind it on a reel to keep things tidy	guide rope is for control of deployment bottom weights descents, empty hoist hooks ascents
Subtotal for deployment tools				$ 509,499				
ONE detector of deployment components/assemblies (from above)				$2,181,457				
assumed % sparing of all components/assemblies	4			$ 87,258				
components/assemblies incl sparing				$ 2,268,716				
Total for linear PIU deployment				**$ 2,778,215**				

APPENDIX C

Referenced quotations:

RYERSON

SALES QUOTATION ACKNOWLEDGEMENT

07/15/2010

JOSEPH T. RYERSON
RYERSON COIL PROCESSING
RYERSON CANADA

QUOTE NBR: 21889806

ATTENTION: Andres Ruga
REFERENCE:
PHONE NO.: FAX NO.:

SALES OFFICE:
Ryerson Philadelphia
20 Steel Road South
MORRISVILLE, PA 19067

FROM: Mario DaSilva
Email: Mario.DaSilva@ryerson.com
Phone No. 19787842800 Fax No. 19787842880

SOLD TO:
BROOKHAVEN NAT'L LAB
BLGD 134B
UPTON, NY 11973

SHIP TO:
BROOKHAVEN NAT'L LAB
BLGD 134B
UPTON, NY 11973

ADDITIONAL COMMENTS:
ATTN: Andres

SHIPCOND: Standard Shipping
PURCHASE ORDER #:

TERMS: 1/2% 10, Net 30
FRT TERMS: PPD

AUTHORIZED SIGNATURE: _____

Quote Line No.	Ord Qty	Ord Uom	Item Description	Estimated Weight Lbs	Quantity In Price Uom	Price	Prc Uom
10	1040	PC	Stnls ANG 304/304L AP 2" X 2" X 0.125" X 38.1"	6,448.300	1,040.0000	$13.2000	PC
				Extended Amount		$13,728.00	
Pieces: 1040			P/N	Delivery Date		08/12/2010	
			Oper 1 BSC				
20	1040	PC	Stnls ANG 304/304L AP 2" X 2" X 0.125" X 58.5"	8,365.500	1,040.0000	$20.2700	PC
				Extended Amount		$21,080.80	
Pieces: 1040			P/N	Delivery Date		08/12/2010	
			Oper 1 BSC				
30	1040	PC	Stnls ANG 304/304L AP 0.75" X 0.75" X 0.125" X 58.5"	2,991.300	1,040.0000	$8.3000	PC
				Extended Amount		$8,632.00	
Pieces: 1040			P/N	Delivery Date		08/12/2010	
			Oper 1 BSC				
40	2080	PC	Stnls Bar FLT HR 304 AP EC 0.25" X 2" X 15"	4,420.000	2,080.0000	$5.0000	PC
				Extended Amount		$10,400.00	
Pieces: 2080			P/N	Delivery Date		08/12/2010	
			Oper 1 BSC				

Tax $4,643.77

Total Weight 21,225 Quote Total Less Tax $53,840.80

QUOTATION

GAUM INCORPORATED
Custom Machinery
Machine Components
ISO 9001:2008 CERTIFIED

TO:
BROOKHAVEN NATIONAL LABORATORY
P.O. BOX 5000
UPTON, NY 11973
USA

ATTN: ANDRES RUGA

SHIP TO:
BROOKHAVEN NATIONAL LABORATORY
P.O. BOX 5000
UPTON, NY 11973
USA

ATTN:

Quote No. & Date		Cust No	S/M	Your Referenced Inquiry	Delivery Promise	F.O.B.	Expiration
1007058	07/26/10	140905	GZ		TO BE DETERMINED	ORIGIN	30 DAYS

Item	Quantity	UM	Part	Description	Price	Extension
001	820.00		1007058-001	LBNE FRAME PMT SIX PIV BROOKHAVEN NATIONAL LAB TO SUPPLY ALL MATERIALS. *FOB ROBBINSVILLE WELD ASSEMBLY BOLT HOLES, NOT DRILLED PARTS TO BE DEGREASED BEFORE WELDING. ASSEMBLY WELDED ON JIG. PRICE DOES NOT INCLUDE PASSIVATNG AFTER WELDING. PRICE IS TO SHRINK WRAP TO SKID. BETTER PACKAGING CAM BE PROVIDED AT EXTRA COST. *TERMS: TO BE DETERMINED.	119.5600	98,039.20
				Total for Quote		**98,039.20**

Your order will be produced using a quality system that has been ISO 9001-2008 certified by Perry Johnson Registrars on Certificate No. C2003-00115.
Note: Standard "Terms and Conditions of Sale" are part of this quotation.

GAUM, INCORPORATED

By:_____

GAUM, INC. * 1080 ROUTE 130 * P.O. BOX 485 * ROBBINSVILLE * NJ * 08691
Phone: (609) 586-0132 * Fax: (609) 586-9748
mail@gauminc.com * www.gauminc.com

QUOTATION

GAUM INCORPORATED
Custom Machinery
Machine Components
ISO 9001:2008 CERTIFIED

TO:
BROOKHAVEN NATIONAL LABORATORY
P.O. BOX 5000
UPTON, NY 11973
USA

ATTN: ANDRES RUGA

SHIP TO:
BROOKHAVEN NATIONAL LABORATORY
P.O. BOX 5000
UPTON, NY 11973
USA

ATTN:

Quote No. & Date		Cust No	S/M	Your Referenced Inquiry	Delivery Promise	F.O.B.	Expiration
1007064	07/28/10	140905	GZ		TO BE DETERMINED	ORIGIN	30 DAYS

Item	Quantity	UM	Part	Description	Price	Extension
001	6,500.00		1007064-001	STANDOFF, LABOR ONLY	1.7000	11,050.00
002	3,300.00		1007064-002	BRACKET WALL, LABOR ONLY *TERMS: TO BE DETERMINED	3.5000	11,550.00
				Total for Quote		**22,600.00**

Your order will be produced using a quality system that has been ISO 9001-2008 certified by Perry Johnson Registrars on Certificate No. C2003-00115.
Note: Standard "Terms and Conditions of Sale" are part of this quotation.

GAUM, INC. * 1080 ROUTE 130 * P.O. BOX 485 * ROBBINSVILLE * NJ * 08691
Phone: (609) 586-0132 * Fax: (609) 586-9748
mail@gauminc.com * www.gauminc.com

GAUM, INCORPORATED

By:_____

130.04.02.06 PMT Supports (PIU)

WBS LEVEL 5	ACTIVITY ID	ACTIVITY DESCRIPTION	START DATE	FINISH DATE	DURATION	RESOURCE	HOURS	COST	TOTAL with Escalation
130.04.02.06.01 Vessel/Liner	WC2430	PMT Support (PIU) - Vessel/Liner - Conc	4/7/2010	1/20/2011	198	BNL M&S CE from UN: Materials & Services		3,124	3,124
						BNL M&S CE from UW: Mechanical Engineer	752	68,423	69,104
						BNL M&S CE from UW: Mechanical Technician	273	18,654	18,840
						Mechanical Engineer P2	685	39,657	65,325
		PMT Support (PIU) - Vessel/Liner - Conceptual desi Total					1,711	129,859	156,393
	WC2440	PMT Support (PIU) - Vessel/Liner - Prelir	1/22/2013	11/4/2013	200	BNL M&S CE from UN: Materials & Services		12,500	13,227
						BNL M&S CE from UW: Mechanical Designer	684	47,381	49,307
						BNL M&S CE from UW: Mechanical Engineer	684	62,203	64,732
						BNL M&S CE from UW: Mechanical Technician	274	18,706	19,467
		PMT Support (PIU) - Vessel/Liner - Preliminary des Total					1,642	140,790	146,732
	WC2450	PMT Support (PIU) - Vessel/Liner - Final	4/17/2014	2/5/2015	200	BNL M&S CE from UN: Materials & Services		12,500	13,693
						BNL M&S CE from UW: Mechanical Designer	1,712	118,590	127,769
						BNL M&S CE from UW: Mechanical Engineer	4,244	385,949	415,820
						BNL M&S CE from UW: Mechanical Technician	274	18,706	20,154
		PMT Support (PIU) - Vessel/Liner - Final design Total					6,230	535,746	577,436
	WC2470	PMT Support (PIU) - Vessel/Liner - Protc	2/6/2015	6/29/2015	100	BNL M&S CE from UN: Materials & Services		96,000	106,790
						BNL M&S CE from UW: Mechanical Designer	274	18,980	20,766
						BNL M&S CE from UW: Mechanical Engineer	445	40,468	44,276
						BNL M&S CE from UW: Mechanical Technician	411	28,059	30,699
		PMT Support (PIU) - Vessel/Liner - Prototype and t Total					1,130	183,507	202,532
	WC2480	PMT Support (PIU) - Vessel/Liner - Procu	6/30/2015	11/20/2015	100	BNL M&S CE from UW: Admin Support	103	4,801	5,302
						BNL M&S CE from UW: Mechanical Engineer	103	9,367	10,345
		PMT Support (PIU) - Vessel/Liner - Procurement and Total					206	14,168	15,647
	WC2483	PMT Support (PIU) - Vessel/Liner - Fabri	11/23/2015	3/16/2018	600	BNL M&S CE from UW: Logistics	1,368	132,833	152,615
						BNL M&S CE from UW: Mechanical Designer	378	26,184	30,084
						BNL M&S CE from UW: Mechanical Engineer	1,824	165,875	190,578
						BNL M&S CE from UW: Mechanical Technician	5,286	360,875	414,619
		PMT Support (PIU) - Vessel/Liner - Fabrication Sup Total					8,856	685,767	787,896
	WC2490	PMT Support (PIU) - Vessel/Liner - Fabri	11/23/2015	3/16/2018	600	BNL M&S CE from UN: Materials & Services		2,778,216	3,245,352
		PMT Support (PIU) - Vessel/Liner - Fabrication Total						2,778,216	3,245,352
130.04.02.06.01 Vessel/Liner Total							**19,775**	**4,468,052**	**5,131,989**
130.04.02.06.02 Deck	WC2530	PMT Support (PIU) - Deck - Conceptual c	1/21/2011	11/3/2011	199	BNL M&S CS PO Purchases		1,198	1,405
						Mechanical Designer P2	137	7,948	13,321
						Mechanical Engineer P2	137	7,948	13,321
						Mechanical Technician T2	137	7,976	13,367

130.04.02.06.02 Deck	WC2530	PMT Support (PIU) - Deck - Conceptual c	1/21/2011	11/3/2011	199	BNL M&S CE from UN: Non Sr. Mechanical Engineer	137	7,356	7,558
		PMT Support (PIU) - Deck - Conceptual design Total					548	32,426	48,972
	WC2540	PMT Support (PIU) - Deck - Preliminary c	11/5/2013	8/26/2014	200	BNL M&S CE from UN: Mechanical Technician	308	19,712	20,999
						BNL M&S CS PO Purchases		3,592	4,548
						BNL M&S CE from UN: Non Sr. Mechanical Engineer	410	22,074	23,516
		PMT Support (PIU) - Deck - Preliminary design Total					718	45,378	49,063
	WC2550	PMT Support (PIU) - Deck - Final design	8/27/2014	6/16/2015	200	BNL M&S CE from UN: Mechanical Technician	822	52,608	57,369
						BNL M&S CS PO Purchases		3,592	4,656
						BNL M&S CE from UN: Non Sr. Mechanical Engineer	2,054	110,587	120,596
		PMT Support (PIU) - Deck - Final design Total					2,876	166,787	182,620
	WC2570	PMT Support (PIU) - Deck - Prototype ar	6/17/2015	11/6/2015	100	BNL M&S CE from UN: Mechanical Technician	103	6,592	7,263
						BNL M&S CS PO Purchases		23,938	31,347
						BNL M&S CE from UN: Non Sr. Mechanical Engineer	103	5,546	6,110
		PMT Support (PIU) - Deck - Prototype and test Total					206	36,076	44,720
	WC2580	PMT Support (PIU) - Deck - Procurement	11/9/2015	4/4/2016	100	BNL M&S CE from UN: Administrative Support	68	3,264	3,667
						BNL M&S CE from UN: Non Sr. Mechanical Engineer	34	1,831	2,057
		PMT Support (PIU) - Deck - Procurement and contrac Total					102	5,095	5,724
	WC2585	PMT Support (PIU) - Deck - Fabrication S	2/8/2018	10/15/2020	701	BNL M&S CE from UN: General Labor	589	12,737	15,573
						BNL M&S CE from UN: Mechanical Technician	659	42,172	51,563
						BNL M&S CE from UN: Non Sr. Mechanical Engineer	673	36,232	44,300
		PMT Support (PIU) - Deck - Fabrication Support Total					1,921	91,141	111,436
	WC2590	PMT Support (PIU) - Deck - Fabrication	7/20/2017	3/26/2020	701	BNL M&S CS Laboratory Equipment		341,037	454,269
		PMT Support (PIU) - Deck - Fabrication Total						341,037	454,269
130.04.02.06.02 Deck Total							**6,371**	**717,940**	**896,806**
130.04.02.06.03 Floor	WC2630	PMT Support (PIU) - Floor - Conceptual c	6/13/2011	3/30/2012	199	BNL M&S CS PO Purchases		2,394	2,844
						Mechanical Designer P2	137	7,948	13,354
						Mechanical Engineer P2	137	7,948	13,354
						Mechanical Technician T2	103	6,041	10,150
						BNL M&S CE from UN: Non Sr. Mechanical Engineer	137	7,393	7,615
		PMT Support (PIU) - Floor - Conceptual design Total					515	31,725	47,318
	WC2640	PMT Support (PIU) - Floor - Preliminary	8/27/2014	6/16/2015	200	BNL M&S CE from UN: Mechanical Technician	342	21,888	23,869
						BNL M&S CS PO Purchases		2,394	3,103
						BNL M&S CE from UN: Non Sr. Mechanical Engineer	308	16,583	18,083
		PMT Support (PIU) - Floor - Preliminary design Total					650	40,865	45,055
	WC2650	PMT Support (PIU) - Floor - Final design	6/17/2015	4/4/2016	200	BNL M&S CE from UN: Mechanical Technician	754	48,256	53,694
						BNL M&S CS PO Purchases		4,788	6,332
						BNL M&S CE from UN: Non Sr. Mechanical Engineer	1,506	81,083	90,220
		PMT Support (PIU) - Floor - Final design Total					2,260	134,127	150,246

	WC2650								
	WC2670	PMT Support (PIU) - Floor - Prototype ar	4/5/2016	8/22/2016	100	BNL M&S CE from UN: Mechanical Technician	103	6,592	7,407
						BNL M&S CS PO Purchases		17,954	23,977
						BNL M&S CE from UN: Non Sr. Mechanical Engineer	103	5,546	6,231
		PMT Support (PIU) - Floor - Prototype and test Total					206	30,092	37,615
	WC2680	PMT Support (PIU) - Floor - Procuremen	8/23/2016	12/13/2016	81	BNL M&S CE from UN: Administrative Support	69	3,305	3,776
						BNL M&S CE from UN: Non Sr. Mechanical Engineer	34	1,832	2,093
		PMT Support (PIU) - Floor - Procurement and contra Total					103	5,136	5,869
	WC2690	PMT Support (PIU) - Floor - Fabrication S	12/14/2016	2/7/2018	301	BNL M&S CE from UN: General Labor	590	12,761	14,846
						BNL M&S CE from UN: Mechanical Technician	659	42,188	49,083
						BNL M&S CE from UN: Non Sr. Mechanical Engineer	602	32,412	37,709
		PMT Support (PIU) - Floor - Fabrication Support Total					1,851	87,361	101,639
	WC2740	PMT Support (PIU) - Floor - Fabrication	12/15/2016	2/8/2018	301	BNL M&S CS Laboratory Equipment		341,036	438,140
		PMT Support (PIU) - Floor - Fabrication Total						341,036	438,140
130.04.02.06.03 Floor Total							**5,585**	**670,341**	**825,881**
Grand Total							**31,731**	**5,856,333**	**6,854,676**

This is the parameter section for		29000	12" HQE PMTs, 1 cavern, 200 kT, no vessel, liner on shotcrete						
								miss by	
Strings:	232	PA's per string:	88	Total wall PA's:	20416		20521	-105	
					floor nom		4239		
					deck nom		4239		
Deployment teams:	4				check		28999		
which is 3 active plus sparing of almost all requirements									
structural cable unit cost	$1.20	per foot	based on	cable mfr quote, on 75000' qty order					
structural cable length each	273.224	feet							
polypropylene guide rope	$0.1042	per foot	based on	McMaster					
ring truss polygon size	58	vertices							

color code of cells: gray, formula, don't change; pink, value needed; green, placeholder, replace with value used for reference design

Part	Total count (mostly without spares)	Cost Each	Labor/Misc Weighing Factor	Cost Total	Material Quantity - Each	Unit	Notes	Description
Deployment materials	232			$0				
left support cable assy, with sleeves, top & bottom termination fittings	232	37.63	1.1	$9,602		ea	cost shown on this line is based on $12040 vendor figure for degreasing and shipping 75000ft of cable. add labor & materials for testing & tagging, and any other fab work by vendor	
cable, 10,000 pound strength, 3xx SS, in 220' (67m) lengths	232	327.87	2	$152,131		ea	cable goes from turnbuckle at top end (~balcony level, 4838L) to top of ring truss, ~5056L; allow a foot or two for termination & margin)	left lay. Matl cost was a distributor's price, for 7x19 regular right lay. Uncoated & unlubricated.
sleeves to support PA's on support cables	10208	8.64	2	$176,394		ea	1 sleeve per PA supported	US Cargo control.com #SS316SLEEVE3/8
top & bottom termination thimbles	464	3.49	2	$3,237		ea	1 thimble per end per cable	US Cargo Control.com # HDTSS304PC3/8 heavy duty thimble
top & bottom termination sleeves	928	8.64	2	$16,036		ea	2 sleeves per end per cable	US Cargo control.com #SS316SLEEVE3/8
				$0				
right support cable assy, with sleeves, top & bottom fittings	232	37.63	1.1	$9,602		ea	cost shown on this line is based on $12040 vendor figure for degreasing and shipping 75000ft of cable. add labor & materials for testing & tagging, and any other fab work by vendor	
cable, 10,000 pound strength, 3xx SS, in 220' lengths	232	327.87	2	$152,131		ea	cable goes from turnbuckle at top end (~balcony level, 4838L) to top of ring truss, ~5056L; allow a foot or two for termination & margin)	right lay. Matl cost was a distributor's price, for 7x19 regular right lay. Uncoated & unlubricated.
sleeves to support PA's on support cables	10208	8.64	2	$176,394		ea	1 sleeve per PA supported	US Cargo control.com #SS316SLEEVE3/8
top & bottom termination thimbles	464	3.49	2	$3,237		ea	1 thimble per end per cable	US Cargo Control.com # HDTSS304PC3/8 heavy duty thimble
top & bottom termination sleeves	928	8.64	2	$16,036		ea	2 sleeves per end per cable	US Cargo control.com #SS316SLEEVE3/8
				$0				
cable shipping/deployment spool	464	20.00	1	$9,280		ea		
pear shaped quicklink	464	22.65	1.5	$15,764		ea	1/2" with nominal working load limit 3300lb	stainless steel direct.com ss0160-pr12 316ss

retention pin (PA onto support cable)	81664	0.27	1.5	$32,461		ea		plastic self retaining (flex barbs on tip); polypropylene?	
cable tie, DI compatible	20416	0.25	3	$15,312	1	ea	will hold over 70 1/4" diameter cables; next size up will hold over 200	polypropylene cable ties; was McMaster Carr 1853T61 reusable 304SS, max 2.31" bundle diameter; 0.75" wide band at .69 each	
bottom ring truss	1			$0		ea	lots of similar weldments, assembled into a regular polygon in the cavern		
in cavern assembly, survey etc labor	1	40,120.00	1	$40,120				2 men 2 months each at dusel rate	
shipping				$0					
top bar prefab weldment	58		3	$0				this weldment is done at factory	
end plate	116	6.13	3	$2,135			6x4"x1/2" plate 304ss		
i-beam	58	733.08	2	$85,037			6"x3.33" 304ss Ibeam ~3m long		
cable tiepoint	696	3.20	3	$6,671			2x2.5" 304ss Tee 2" lg		
				$0					
diagonal members	232	314.39	2	$145,876			4"sqx1/4 wall 304ss ~1.5m long	cut & weld prep the ends, drill circulation holes before descent	
base polygon bars	29	1,944.32	2	$112,770			6"sqx1/4 wall 304ss ~6.05m long	cut & weld prep the ends, drill circulation holes before descent	
gussets	116	3.07	2	$712					
tiedown plates	29	81.79	3	$7,116			~12" sq 1" plate 304ss; 4 clearance through holes for permanent mounting; a few tapped through holes for fixturing/clamping use during field welds	holes drilled before descent	
bolts, tiedown plates to load bulkheads	116	4.63	2	$1,074			as M20x60 SS from McMasterCarr		
shackle to connect PIU support cable to ring truss tie point	696	3.85	2	$5,359			316ss 1/2 ton rated, US cargo control Part # SPAS5/16SS		
rock bolt anchor point & liner penetration to anchor ring truss	29					ea	each anchor point location consists of 4 rock bolts, a connection plate, large diameter SS bulkhead, fastener complement, & liner penetration seal		
rock bolts, installed	116	100.00	1.5	$17,400			per Jack Fowler, a steel 2m long rock bolt with several tons of holding power is $100 installed. Four are assumed here		
steel bracket, grouted	29	300.00	1.5	$13,050			(this is outside of liner)	cost is ken's guess at this point	
stainless load bulkhead toadstool	29	1,000.00	2	$58,000			design tbd; roughly a stout plate with bolting features down to grouted bracket, and above for ring truss attachment, with a thin lip for weld prep for liner continuation	cost is ken's guess at this point	
stainless liner can	29	1,000.00	3	$87,000			roughly cylindrical liner extension from vessel floor to load bulkhead	cost is ken's guess at this point	
bolts, bulkhead to rockbolt bracket	116	3.08	2	$715			assumed bluecoated steel M20x60		
liner cutout at rockbolt array	29	500.00	1	$14,500			incremental cost on what would otherwise be a solid pan		
upper tensioning assembly (turnbuckle with straight pins & cotter keys)	464	150.00	1.5	$104,400		ea	probably can get for less $ elsewhere; could also downrate	turnbuckle, jaw & jaw with pins & cotter keys; McMaster 3022T56, 6" adjustment, 5200 lb working load	
safety drawbar springs & shackles	464	51.00	1.5	$35,496			if we need to add them, consider MCM 9630K77 as upper cost bound		

								increment on balcony structure?	
installation of ring onto balcony				$40,120					
polygon side end plates	116	6.13	3	$2,135					
balcony polygonal rail for tiepoints	58	733.08	2	$85,037					
upper tiepoints attached to balcony rail	696	3.20	3	$6,671					
Light barrier subassy (per 100kt FV cavern)									
light barrier sheet	20416	16.00	1.5	$489,984	0.25	m²			
retention pin (light barrier onto PA housing face)	81664	0.27	1.5	$32,461	1.00	ea	alternate is 18-8 blind rivets at 12 cents each in 100 qty	plastic self retaining (flex barbs on tip); polypropylene?	
Subtotal per detector of wall PA deployment consumables (excluding PA's, light collector)				$2,181,457					
Linear PIU Deployment tooling (based on quantity calc tab)							There is one crew equivalent of sparing of all deployment tooling included in quantities here		
ring truss welding jig	1	8,000.00	1	$8,000					
PIU winch (one per cable being deployed)		37,500.00	1	$300,000					
Winch control system (one per crew)		2,000.00	1	$8,000					
PA cart		4,000.00	1	$32,000			capacity per cart ~56		
deck annulus work platform, mobile	3	15,000.00	1	$45,000				no spare platform	
sheave assembly		5,000.00	1	$20,000					
bobbin cradle		6,000.00	1	$36,000					
bundle guide	1	750.00	1	$12,000					
cable grips			1	$0				include as safety precaution against winch brake or other failure	
turnbuckle adjusting tools	16	50.00	1	$800			2 wrenches for adjusting turnbuckle, cotter key tools. Tools are conventional but equip with lanyards for floor liner damage prevention & personnel safety		
hoist cable	8		1	$0					
cable, 10,000 pound strength, 3xx SS, in 220' lengths	8	47.23	2	$756		ea	cable goes from turnbuckle at top end (~balcony level, 4838L) to top of ring truss, ~5056L; allow a foot or two for termination & margin)	right lay. Matl cost was a distributor's price, for 7x19 regular right lay. Uncoated & unlubricated.	
top & bottom termination thimbles	16	3.49	2	$112		ea	1 thimble per end per cable	US Cargo Control.com # HDTSS304PC3/8 heavy duty thimble	
top & bottom termination sleeves	32	8.64	2	$553		ea	2 sleeves per end per cable		
deployment weights	16	550.00	1	$8,800					
work platform track on level 1	1	8,052.00	2	$16,104					
work platform safety rails	4	1,200.00	2	$9,600					
platform tangential motion lock	3	1,000.00	2	$6,000					
radio handsets (one per crew member)	24	100.00	1.5	$3,600			assign a channel per deployment team; team leaders switch channels to coordinate with other teams if needed	Pricing is ~50% higher than FRS as a placeholder	
guide rope	8	31.26	1.5	$375			amount shown is 2 lines 300' each per station	McMaster Carr #3837T18 3/8" Polypropylene twisted rope, 200lb working load limit	

rope reel (for managing guide tethers for hoist hook or bottom weights)	8	150.00	1.5	$1,800			If we need a guide rope, making a pile of 200' of rope on the floor will lead to tangle issues & safety issues, so wind it on a reel to keep things tidy	guide rope is for control of deployment bottom weights descents, empty hoist hooks ascents	
Subtotal for deployment tools				$ 509,499					
ONE detector of deployment components/assemblies (from above)				$2,181,457					
assumed % sparing of all components/assemblies	4			$ 87,258					
components/assemblies incl sparing				$ 2,268,716					
Total for linear PIU deployment				**$ 2,778,215**					

LBNE	**LBNE Water Cherenkov Detector** **BASIS of ESTIMATE FORM (BoE)**	**Date of Estimate:** **Revision #: 2** **Prepared By: R. Paulos** **Approved By:** **Level 2 Manager**

WBS Number: **1.04.02.07**	**WBS Title:** **Installation**

WBS Dictionary:
This includes all the experts, physicist and engineering supervision supporting the installation and test activities of all tasks in 1.4.2. Installation labor itself is not included here.

Cost Type **(check all that apply):** ___ EDIA Material _x_ EDIA Labor ___ MFG Material ___ MFG Labor	**Costing Method** **(check all that apply):** _x_ Engineering Judgment ___Physicist Estimate _x_ Level of Effort ___ Vendor Quote (attached) ___ Catalog Price (specify) ___ Prior purchase ___ Prior experience ___ Parametric Estimate ___ Other- Description:_____

Attach Relevant Documents (including but not limited to):

M&S Contingency (%)**: 10**	**Labor Contingency** (%)**: 20**

Basis of Estimate
This cost element is based on the engineering management judgement of the WC manager and deputy. The estimated effort covers the time and expertise required on-site during actual WCD installation activity. Our experience shows that an on-site engineering presence during construction is needed and will provide immediate communication with LBNE management and installation team members. This allows for quick turnaround in the event that problems or questions arise on-site. Costs are for one engineer on-site during the liner install, PIU install, water piping install, and magnetic coil installation activities. Non-labor costs are for travel to and from the site, lodging, etc.

Assumptions/Interfaces
The bulk of this activity occurs during the FY20 - FY22 time period.

Constraints

Comments

130.04.02.07 Installation

WBS LEVEL 5	ACTIVITY ID	ACTIVITY DESCRIPTION	START DATE	FINISH DATE	DURATION	RESOURCE	HOURS	COST	TOTAL with Escalation
130.04.02.07 Installation	WC2730	Installation Oversight	8/27/2019	4/28/2022	697	BNL M&S CE from UW: Sr. Mechanical Engineer	2,565	280,401	357,816
						BNL M&S CE from UW: Travel		66,828	86,694
		Installation Oversight Total					2,565	347,230	444,510
130.04.02.07 Installation Total							**2,565**	**347,230**	**444,510**
Grand Total							**2,565**	**347,230**	**444,510**

LBNE	**LBNE Water Cherenkov Detector** **BASIS of ESTIMATE FORM (BoE)**	**Date of Estimate:** **Revision #:** **Prepared By:** **Approved By:** **Level 2 Manager**

WBS Number: **130.04.02.08**	**WBS Title:** **Magnetic Compensation**

WBS Dictionary:

This includes all the cables, supports, power supplies, and control systems for compensation of the earths magnetic field within the detector.

Cost Type **(check all that apply):** ___ EDIA Material _x__ EDIA Labor _x__ MFG Material ___ MFG Labor	**Costing Method** **(check all that apply):** _x_ Engineering Judgment ___Physicist Estimate ___ Level of Effort _x_ Vendor Quote (attached) _x_ Catalog Price (specify) ___ Prior purchase _x_ Prior experience ___ Parametric Estimate ___ Other- Description:_____

Attach Relevant Documents (including but not limited to):

M&S Contingency (%)**: 40**	**Labor Contingency** (%)**: 40**

Basis of Estimate
Details of Estimate: Non-labor costing is a mixture of vendor quotes, catalog pricing, and engineering judgment. It is detailed fully in the attached pages. EDIA labor costing is entirely engineering judgment. Conceptual design is nearly complete. Preliminary design will verify that concepts are workable and will detail choices for cable, fasteners, feedthroughs, and waterproof joints. It will involve additional magnetic simulation to firm up concepts for cable placement and operating currents. Final design will settle on a method for making waterproof electrical joints, and will detail final cable and power supply systems. It will generate specifications for procurement of major components. The final compensation coil design must be tightly coupled to the final installation design. Procurement and Contracts labor will require generating and issuing RFQs, identifying and screening vendors, and inspecting delivered components. Prototype and test will verify methods for fastening cable to concrete and verify that electrical joints can be made reliable and waterproof, and that the chosen power supplies can handle anticipated load inductance.

LBNE Magnetic Compensation Parts List and Cost

Part	Total count	Unit	Cost / Unit	Cost Total	Comment
Submersible cable, 4-conductor, 8 AWG	16500	m	$8.50	$140,250	Quote from Paige Electric ($2.59/ft = $8.50/m)
Submersible cable, 1-conductor, 2 AWG	14000	m	$8.00	$112,000	Educated guess based on above quote
2-4-conductor GelTap joint closure	335	ea.	$14.00	$4,690	Quote from Crescent Electric
2-conductor GelWrap joint closure	500	ea.	$6.00	$3,000	
Junction Boxes	175	ea.	$20.00	$3,500	Engineering Judgment
Power Supplies, various ranges	19	ea.	$5,000.00	$95,000	Engr. Judgment + catalog (Agilent N87xx, Newark)
Rackmount Enclosures with cooling	4	ea.	$5,000.00	$20,000	Engr. Judgment
Light-tight cord feedthroughs for deck	200	ea.	$50.00	$10,000	Catalog pricing (Newark)
Misc. electrical crimp connectors, nails, etc.	1	lot	$2,000.00	$2,000	Engineering Judgment
Concrete Nail Guns	3	ea.	$1,000.00	$3,000	Catalog pricing (Nail Gun Depot)
Wall mount steel J-hooks with retaining clip	12000	ea.	$2.50	$30,000	Catalog pricing (McMaster-Carr)
Enclosure for series connections	1	ea.	$4,620.00	$4,620	Engr. Judgment (see attached spreadsheet)
Pre-cut all cable sections (unspool, measure, cut, label, and respool)	400	ea.	$45.00	$18,000	Engr. Judgment (see attached spreadsheet)
			Grand Total:	$446,060	

Other vendor quotes and correspondence -

Newark

SEARCH FIND

RoHS compliant items only | Advanced Search

Logout | About Us | Contact Us | Help | International Sites

Shopping Cart : $0.00 (0 Items)

Back to > Connectors > More Connectors

Spotted an Error? Print Page Email to a Friend

THOMAS & BETTS - 2942SST - 1 INCH STAILNESS STEEL CORD CONN

Thomas&Betts

Manufacturer: THOMAS & BETTS
Newark Part Number: 34P7518
Manufacturer Part No: 2942SST
RoHS Compliance :

Description

- 1 INCH STAILNESS STEEL CORD CONN

Availability

Availability: 200

Supplier Stock

- Non-Cancelable/Non-Returnable
Ships within 7 business days

Price For: 1 Each
Minimum Order Quantity: 1
Order Multiple Quantity: 1
Price: $62.28

Qty 1 BUY

Price

Qty	Price
1 - 24	$62.28
25 - 49	$59.17
50 - 99	$57.44
100 - 249	$55.71
250+	$53.63

Back to > Power & Line Protection > Bench Top Power Supplies

Spotted an Error? Print Page Email to a Friend

AGILENT TECHNOLOGIES - N8740A-831-230 - POWER SUPPLY, DC, 150V, 3.3KW

Image is for illustrative purposes only.
Please refer to product description

Manufacturer: AGILENT TECHNOLOGIES
Newark Part Number: 10R2038
Manufacturer Part No: N8740A-831-230

RoHS Compliance :

Description

- POWER SUPPLY, DC, 150V, 3.3KW
- Output Type:Programmable
- No. of Outputs:1
- Output Voltage:150V
- Output Current:22A
- Power Rating:3300W
- Input Voltage:170V AC to 265V AC
- Length:442.5mm
- Width:423mm
- Height:88mm
- Weight:28.6lb
- RoHS Compliant: NA

SHOW ACCESSORIES

Availability

Availability: 1
Price For: 1 Each
Minimum Order Quantity: 1
Order Multiple Quantity: 1
Price: $4,699.00

Qty 1 BUY

Price

Qty	Price
1+	$4,699.00

Accessories

Rack Mount Slide Kit
AGILENT TECHNOLOGIES
N5740A

1 Each
$141.00

BUY

Steel Routing Hooks

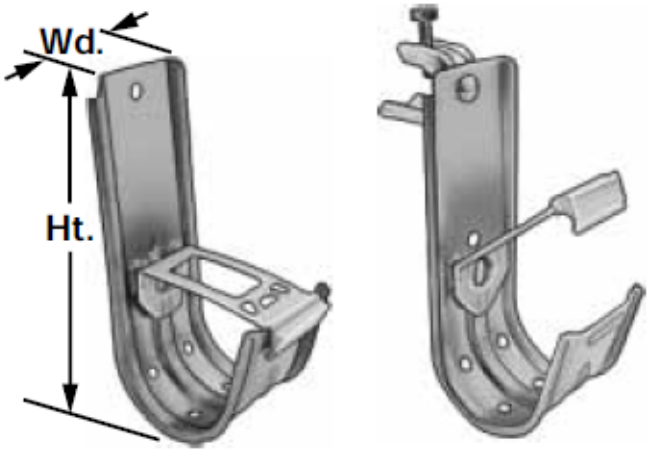

Wall-Mount Style with Retaining Clip Closed

Beam-Mount Style with Retaining Clip Open

Route multiple runs of wire, cable, hose, and tube. Both styles include a removable locking retaining clip to keep the bundle in the hook.

Wall-mount hook has 1/4″ dia. mounting holes (fasteners not included).

Beam-mount hook accepts flanges up to 1/2″ thick.

St Max. Each

W $2.62

Be 4.40

Nail Gun Depot :: Nailers :: Concrete/Steel T-Nailers :: MAX HN120 PowerLite 400 PSI Concrete Nailer, 1" to 2-1/2"

MAX HN120 PowerLite 400 PSI Concrete Nailer, 1" to 2-1/2" #27255

The MAX HN120 PowerLite high pressure concrete nailer drives 0 degree plastic collated concrete pin nails from 1" to 2-1/2" in length. Comes complete with plastic carrying case. Like all MAX PowerLite 400 PSI tools, the HN120 is 40% lighter and 20% smaller than the competition. Additional features include a sequential fire trigger, tangle free swivel air fitting, trigger lock, and comfortable rubber hand grip. This MAX concrete nailer is one of a kind. An extremely powerful, lightweight, and compact design make it a must for the everyday user. Excellent for installing drywall track, furring strips, sill plates, steel beams, trailer flooring, and other wood/steel to concrete applications.
****No safety certifications required****

Tool Specifications:
Weight: 6.4 lbs
Dimensions: H: 15-3/4" W: 3-3/8" L: 12-3/8"
Operating Pressure: 210-320 psi
Fastener Capacity: 50 pins
Fastener Range: 1 - 2-1/2"
Fastener Diameter: .133 to .145"

Details(Related products listed below)

Qty/Box	1
Weight	9.00 lbs
SKU	HN120

Price : $ 949.00

Table1. Task Table

of 9

Subject: FW: Raychem RFQ
From: "Ronald G. Hillson" <Ronald.Hillson@cesco.com>
To: <probl@psl.wisc.edu>

Phil….

We are happy to quote you the following Raychem

378 – 504 pcs. #GATP-! $ 13.92 each. Factory stock freight allowed. (18 pcs per standard pack)

500 pcs. #GELWRAP-18/4-100 $ 5.98 each. Factory stock freight allowed. (6 pcs per standard pack)

If you have any questions, please let me know.

Thanks,

Ron Hillson
Inside Sales

Thu, 17 Jun 2010 14:29:14 -0400
From: "Jim Coffey" <jcoffey@paigeelectric.com>
To: "'Phil Robl'" <probl@psl.wisc.edu>
Cc: "'KIM PHILLIPS'" <kphillips@paigeelectric.com>,
"'Marc Massoglia'" <mmassoglia@paigeelectric.com>

Subject: RE: Stranding on P7343-SP
Date: Thu, 17 Jun 2010 14:29:09 -0400
Organization: Paige Electric Company

Phil,
Sorry for the delay in quoting. We are quoting to specification except 37 strands as requested.

8/4 XLPE/PVC Binder jacket, SWA, HDPE Jacket 600V Rated 100,000 Ft
Price: $ 2,590.00 Per. 1000 Ft

6/4 XLPE/PVC Binder jacket, SWA, HDPE Jacket 600V Rated 100,000 Ft
Price: $ 3,220.00 Per. 1000 Ft

Delivery 17 to 21 Weeks ARO

James Coffey
Paige Electric Company
National Sales Manager

PH: 800-997-2443
FX: 904-543-1330

130.04.02.08 Magnetic Compensation

WBS LEVEL 5	ACTIVITY ID	ACTIVITY DESCRIPTION	START DATE	FINISH DATE	DURATION	RESOURCE	HOURS	COST	TOTAL with Escalation
130.04.02.08.01 Magnetic Comp	WC2750	Magnetic Compensation - Conceptual d	4/7/2010	11/4/2010	149	BNL M&S CE from UW: Sr. Electrical Engineer	69	7,896	7,931
		Magnetic Compensation - Conceptual design Total					69	7,896	7,931
	WC2760	Magnetic Compensation - Preliminary d	1/24/2013	8/27/2013	150	BNL M&S CE from UW: Sr. Electrical Engineer	428	49,252	51,089
		Magnetic Compensation - Preliminary design Total					428	49,252	51,089
	WC2770	Magnetic Compensation - Final design	4/21/2014	2/9/2015	200	BNL M&S CE from UW: Sr. Electrical Engineer	1,712	197,240	212,562
		Magnetic Compensation - Final design Total					1,712	197,240	212,562
	WC2790	Magnetic Compensation - Prototype an	2/10/2015	11/24/2015	200	BNL M&S CE from UW: Electrical Engineer	2,226	207,552	228,216
						BNL M&S CE from UW: Electrical Technician	4,450	235,895	259,380
		Magnetic Compensation - Prototype and test Total					6,676	443,447	487,595
	WC2800	Magnetic Compensation - Procurement	9/7/2016	11/29/2016	60	BNL M&S CE from UW: Electrical Engineer	428	39,888	45,644
						BNL M&S CE from UW: Sr. Electrical Engineer	856	98,574	112,798
		Magnetic Compensation - Procurement and contracts Total					1,283	138,462	158,442
	WC2805	Magnetic Compensation - Procurement	9/8/2016	11/30/2016	60	BNL M&S CE Costs		609,420	709,341
		Magnetic Compensation - Procurement and contracts Total						609,420	709,341
	WC2810	Magnetic Compensation - Fabrication	9/7/2017	6/13/2018	200	BNL M&S CE Costs		30,990	37,251
		Magnetic Compensation - Fabrication Total						30,990	37,251
130.04.02.08.01 Magnetic Compensatin Design and Fabrication Total							**10,167**	**1,476,707**	**1,664,212**
130.04.02.08.02 Magnetic Comp	WC2840	NOTE: Magnetic Compensation - Install	8/27/2019	11/19/2019	60	BNL M&S CE from UW: Electrical Engineer	257	23,944	29,599
						BNL M&S CE from UW: Electrical Technician	856	45,356	56,067
						BNL M&S CE from UW: Travel		17,820	22,395
		NOTE: Magnetic Compensation - Installation - Floor Total					1,112	87,120	108,061
	WC2850	NOTE: Magnetic Compensation - Install	10/14/2020	1/18/2021	68	BNL M&S CE from UW: Electrical Engineer	257	23,965	30,767
						BNL M&S CE from UW: Electrical Technician	855	45,347	58,217
						BNL M&S CE from UW: Travel		17,820	23,257
		NOTE: Magnetic Compensation - Installation - Wall Total					1,112	87,133	112,241
	WC2860	NOTE: Magnetic Compensation - Install	1/18/2021	6/7/2021	100	BNL M&S CE from UW: Electrical Engineer	257	23,963	30,763
						BNL M&S CE from UW: Electrical Technician	856	45,377	58,254
						BNL M&S CE from UW: Travel		17,820	23,257

130.04.02.08.02 Magnetic Comp	WC2860	NOTE: Magnetic Compensation - Install	1/18/2021	6/7/2021					
		NOTE: Magnetic Compensation - Installation - Deck Total					1,113	87,159	112,275
	WC2880	NOTE: Magnetic Compensation - Install	1/18/2021	6/7/2021	100	BNL M&S CE Costs		1,000,000	1,305,100
		NOTE: Magnetic Compensation - Installation - Deck Total						1,000,000	1,305,100
130.04.02.08.02 Magnetic Compensatin Installation Total							**3,338**	**1,261,412**	**1,637,676**
Grand Total							**13,505**	**2,738,119**	**3,301,888**

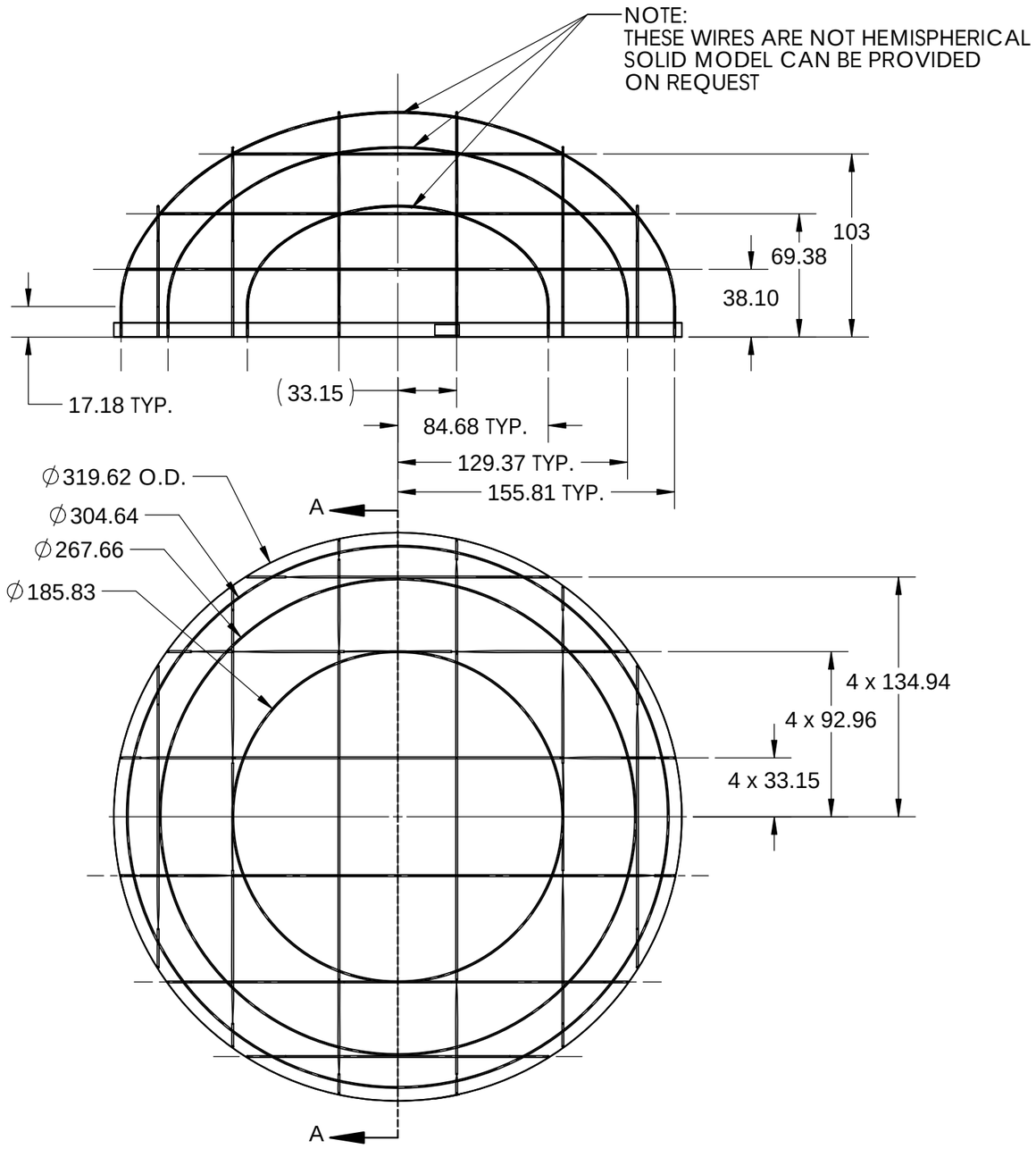

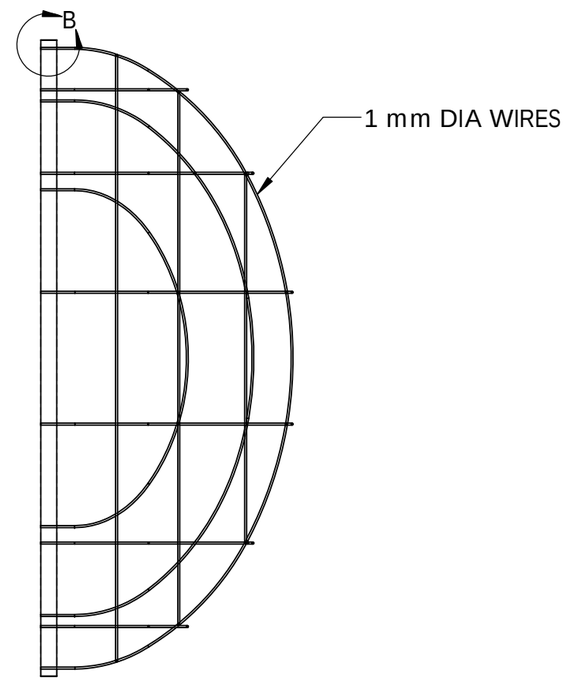

SECTION A-A

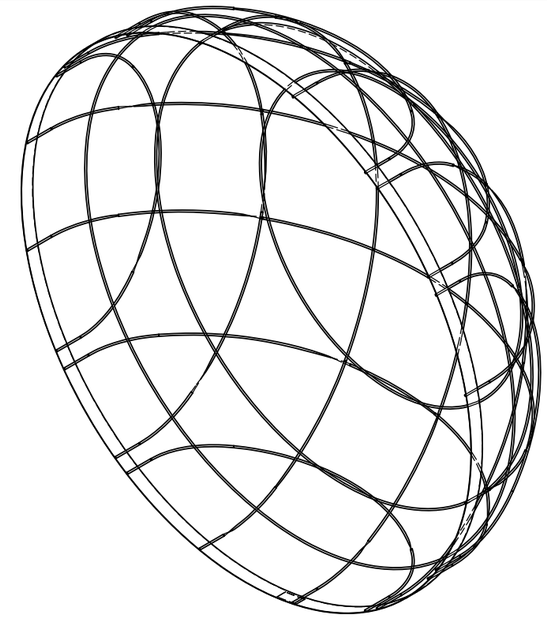

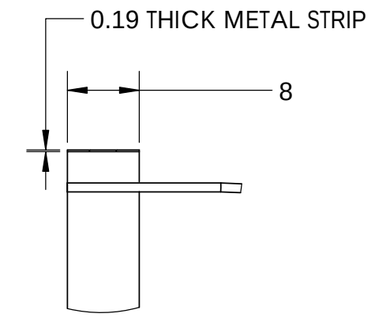

DETAIL B
SCALE 1.5 : 1

NOT FOR PRODUCTION
REFERENCE ONLY

NOTE:
1. ALL DIMENSIONS ARE TO CENTERLINE OF WIRES
2. WIRES ARE 1mm DIA.
3. WIRES ARE NOT HEMISPHEARICAL, SOLID MODEL AVAILABLE ON REQUEST.
4. ALL TOLERANCES ±1mm
5. ALL JOINTS SPOT WELDED
6. FINAL COATING WITH PROTECTIVE LAYER REQUIRED MATERIAL: ACRYLIC

MAT'L Mu METAL	ASME Y14.5M 1994 APPLIES	DATE 7/15/08	**PHYSICAL SCIENCES LABORATORY**	
LBNE		DRAWN JPB	UNIVERSITY OF WISCONSIN	
OPTICAL MODULE	UNLESS NOTED 3.2 / UNITS: MM	CHK'D -	(608-877-2200)	
Mu METAL BASKET	3-PLACE: +/-.0.1 / 2-PLACE: +/-0.2	APPR'D -	NO REQ'D -	DWG NO 8753 B 100 / REV B
USED ON -	1-PLACE: +/-0.4 / ANGULAR: +/-0.5 DEGREES	SCALE 1:3	SHEET 1 OF 1	

DRAWN WITH SolidWorks Office 2007

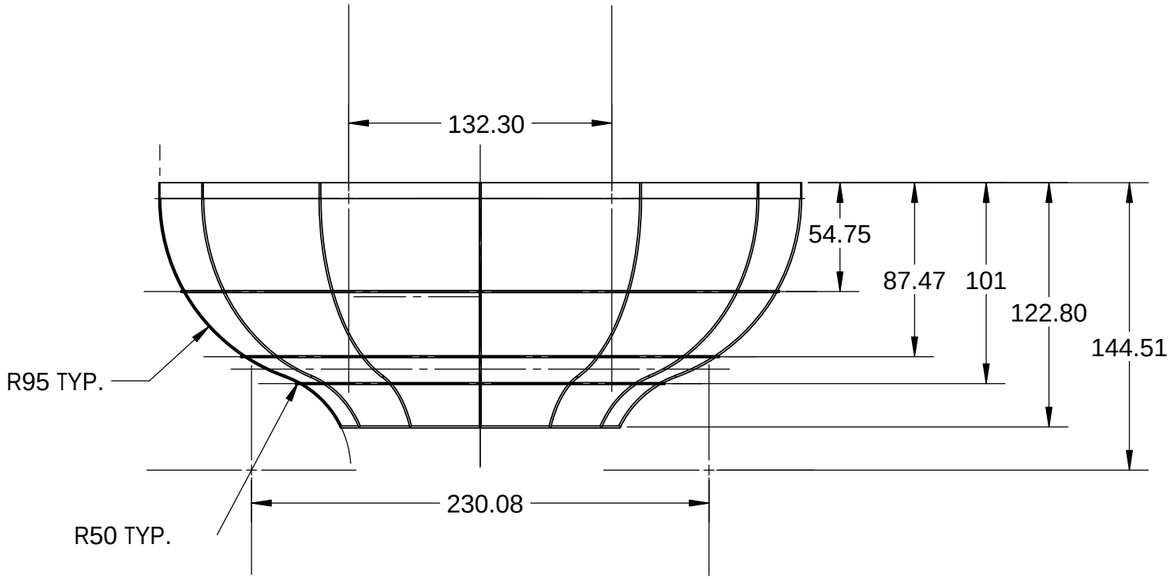

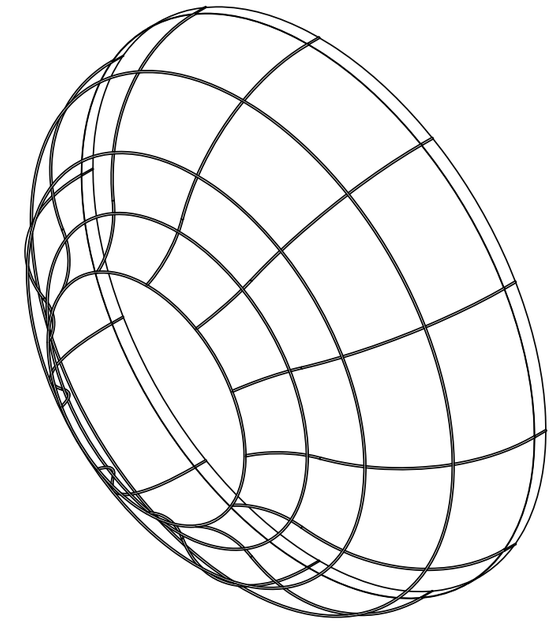

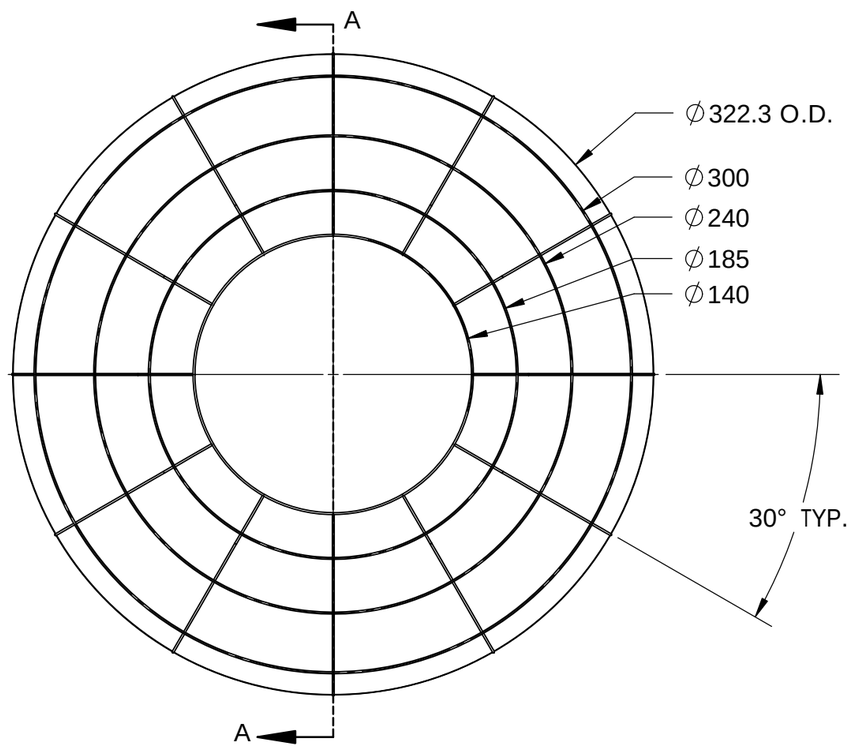

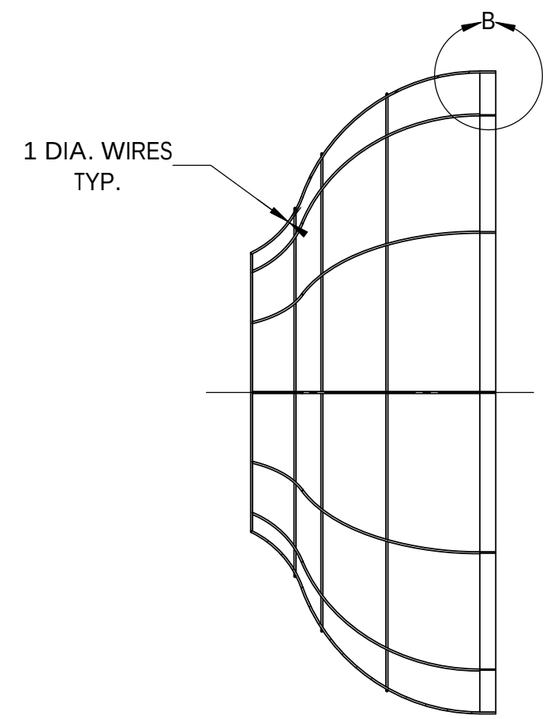

SECTION A-A

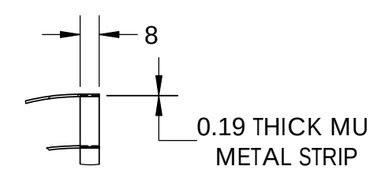

DETAIL B
SCALE 2 : 5

NOT FOR PRODUCTION
REFERENCE ONLY

NOTE:
1. ALL DIMENSIONS ARE TO CENTERLINE OF WIRES
2. WIRES ARE 1mm DIA.
3. WIRES ARE NOT HEMISPHEARICAL, SOLID MODEL AVAILABLE ON REQUEST.
4. ALL TOLERANCES ±1mm
5. ALL JOINTS SPOT WELDED
6. FINAL COATING WITH PROTECTIVE LAYER REQUIRED MATERIAL: ACRYLIC

MAT'L Mu METAL	ASME Y14.5M 1994 APPLIES	DATE 7/15/08	PHYSICAL SCIENCES LABORATORY
LBNE		DRAWN JPB	UNIVERSITY OF WISCONSIN
OPTICAL MODULE	UNLESS NOTED 3.2 / UNITS: MM	CHK'D -	(608-877-2200)
BASER Mu METAL SHIELD	3-PLACE: +/-.0.1 / 2-PLACE: +/-0.2	APPR'D -	NO REQ'D - / DWG NO 8753 B 101 / REV -
USED ON -	1-PLACE: +/-0.4 / ANGULAR: +/-0.5 DEGREES	SCALE 1:3	SHEET 1 OF 1

DRAWN WITH SolidWorks Office 2007

REVISIONS				
REV	BY	DESCRIPTION	DATE	APPROVED

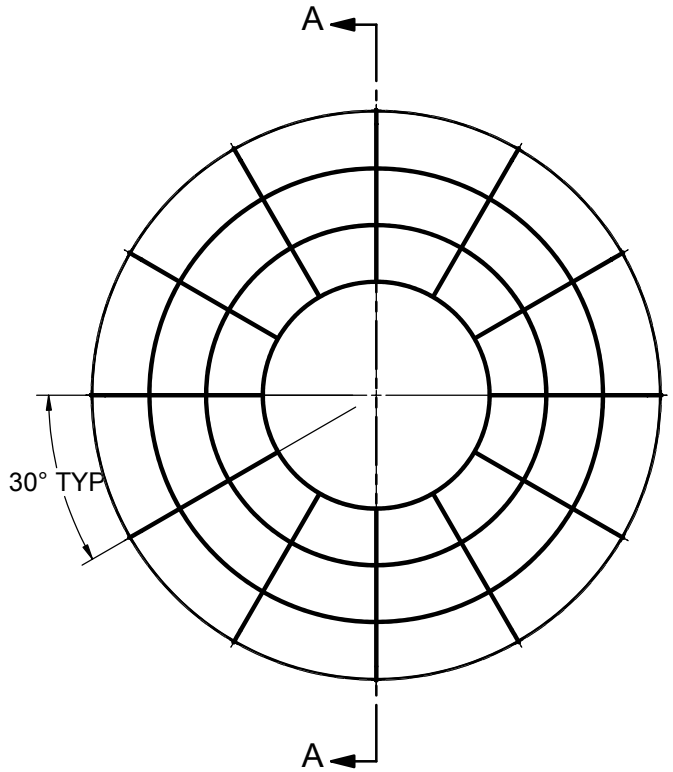

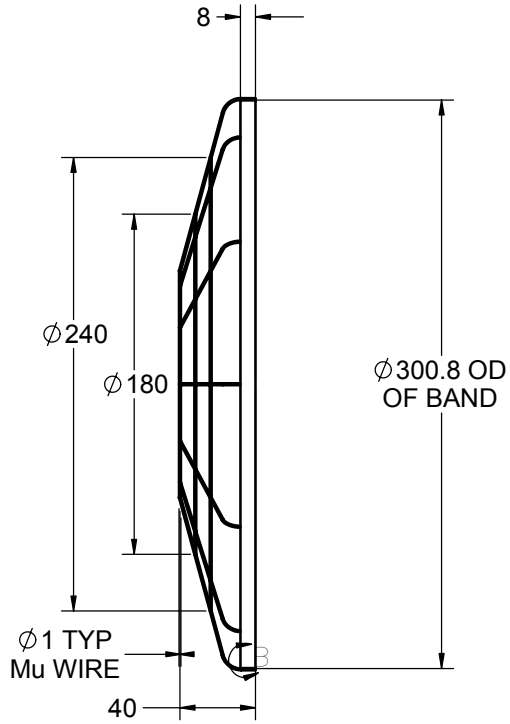

SECTION A-A

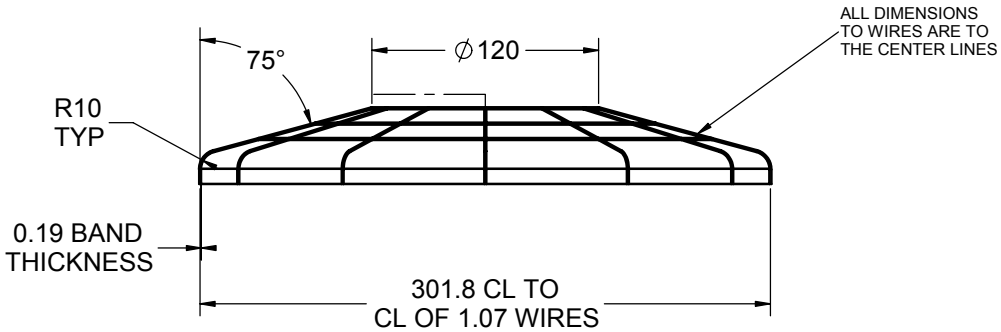

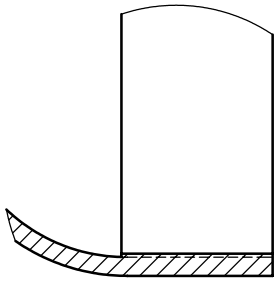

DETAIL B
SCALE 5 : 1

MAT'L Mu METAL	ASME Y14.5M 1994 APPLIED	DATE 6/23/03	PHYSICAL SCIENCES LABORATORY
ICE CUBE		DRAWN GMG	UNIVERSITY OF WISCONSIN (608-877-2200)
OPTICAL MODULE	UNLESS NOTED UNITS: MM	CHK'D -	
UPPER Mu METAL SHIELD - B8	3-PLACE: +/-.05 2-PLACE: +/-.10	APPR'D -	NO REQ'D -
USED ON -	1-PLACE / FRAC: +/-.3 ANGULAR: +/-0.5 DEGREES	SCALE 1:2	SHEET 1 OF 1

DWG NO 5549 C 072 REV A

Drawn with SolidWorks 2001Plus

REVISIONS				
REV	BY	DESCRIPTION	DATE	APPROVED

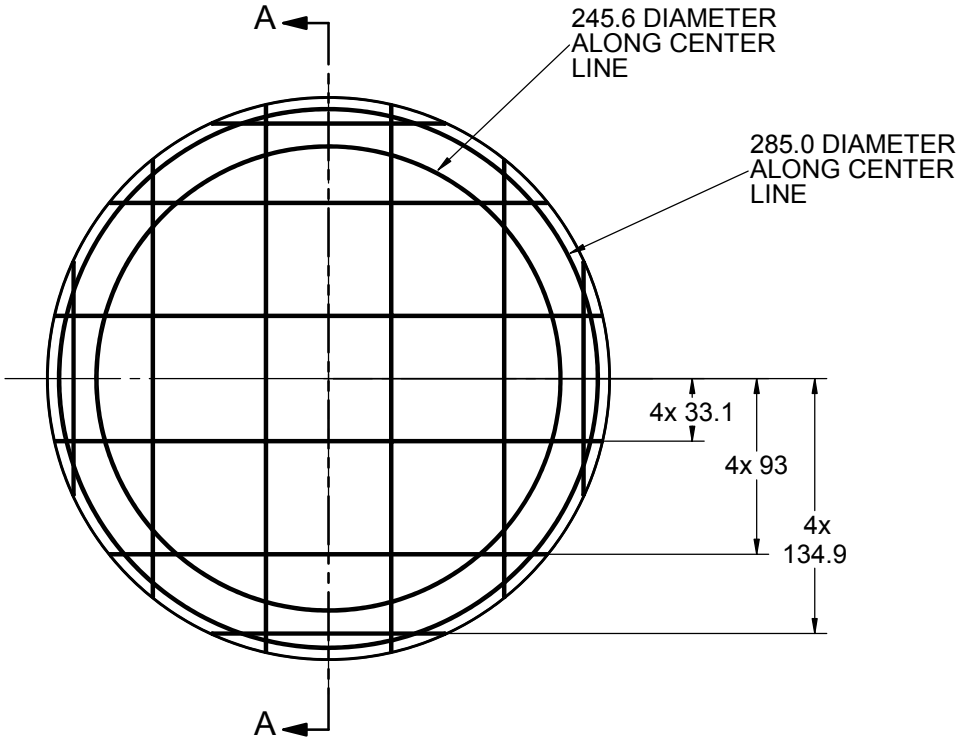

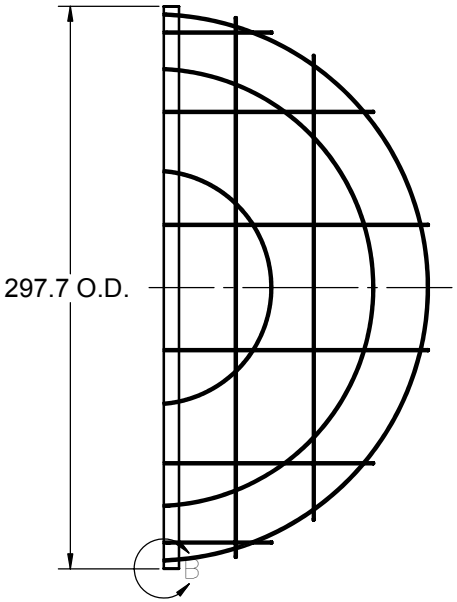

SECTION A-A

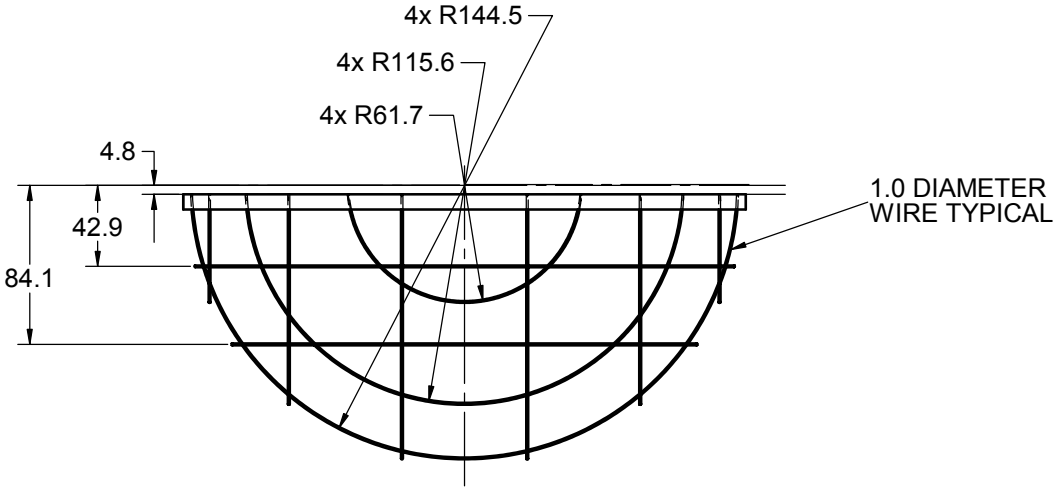

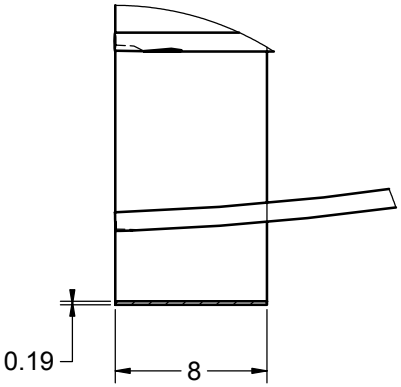

DETAIL B
SCALE 5 : 1

MAT'L Mu METAL	ASME Y14.5M 1994 APPLIED	DATE 5/28/03	PHYSICAL SCIENCES LABORATORY
ICE CUBE		DRAWN GMG	UNIVERSITY OF WISCONSIN (608-877-2200)
OPTICAL MODULE	UNLESS NOTED UNITS: MM	CHK'D -	
Mu METAL BASKET - K1	3-PLACE: +/-.05 2-PLACE: +/-.15	APPR'D -	NO REQ'D -
USED ON -	1-PLACE / FRAC: +/-.25 ANGULAR: +/-0.5 DEGREES	SCALE 1:2	SHEET 1 OF 1

DWG NO 5549 C 067 REV B

Drawn with SolidWorks 2001Plus

	LBNE Water Cherenkov Detector **BASIS of ESTIMATE FORM (BoE)**	**Date of Estimate: Sept 8, 2011** **Revision #: 1** **Prepared By: Farshid Feyzi** **Jack Fowler** **Approved By:** **Level 2 Manager**

WBS Number: **130.04.02.09**	**WBS Title:** **Installation Equipment**

WBS Dictionary:

This includes all the systems and components necessary for installation of components within the Water Containment Vessel and on deck. (Permanent overhead cranes rails, trolleys hoists, gondolas, mast climbers, personnel lifts, mobile cranes and temporary scaffoldings.)

Cost Type **(check all that apply):** _x__ EDIA Material _x__ EDIA Labor _x__ MFG Material _x__ MFG Labor	**Costing Method** **(check all that apply):** _x__ Engineering Judgment ___Physicist Estimate _x__ Level of Effort _x__ Vendor Quote (attached) _x__ Catalog Price (specify) ___ Prior purchase _x__ Prior experience ___ Parametric Estimate ___ Other- Description:_____

Attach Relevant Documents (including but not limited to):

M&S Contingency (%): **38**	**Labor Contingency** (%): **24**

Basis of Estimate

Details of Estimate:
This BOE includes all systems and components, both temporary and permanent, necessary for the construction and installation of the WCD, deck assembly, and installation of PIUs in the cavity.

For 130.4.2.9.1, permanent installation equipment, we are considering an overhead crane, annular monorail with lifting hoists, and annular monorail with personnel gondolas. The material costs and EDIA for the overhead crane are based on costs from other physics experiments and engineering estimates. The costs for the monorails, hoists, and gondolas are based on estimates from an outside construction company. These initial estimates were included in the original deck estimate but moved to 130.4.2.9.1. There is also some time budgeted for LBNE engineers to plan for and layout the mountings for this equipment.

For 130.4.2.9. 2, personnel access, we are assuming a construction type elevator that is mounted near the entrance drift and allows for personnel transport between 4850L and 5117L. This elevator will be removed after construction of permanent systems are complete. The estimate was based on a preliminary quote from a company.

For 130.4.2.9.3, installation equipment, we are considering the use of multiple mast climbers to perform the bulk of the main wall installation. The current concept requires either 4 single mast or 2 double mast climbers. The costs in the estimate are quotes for leasing the equipment. It was received from a company that deals with these types of equipment. There is also some time budgeted for LBNE engineers to plan for and layout the mountings for this equipment.

Above equipment and preliminary specifications are tabulated below

	Capacity	Lift	Travel	Quantity
Polar Crane	20 ton	85 m	0 to 22 m radius	1
Mast Climber	TBD	80m	60 degrees	4
Gondola	1 ton	80 m	360 degree	2
Hoist	2 ton	80 m	360 degree	2
Personnel Elevator	4 person	80 m	Stationary	1

Schematic:

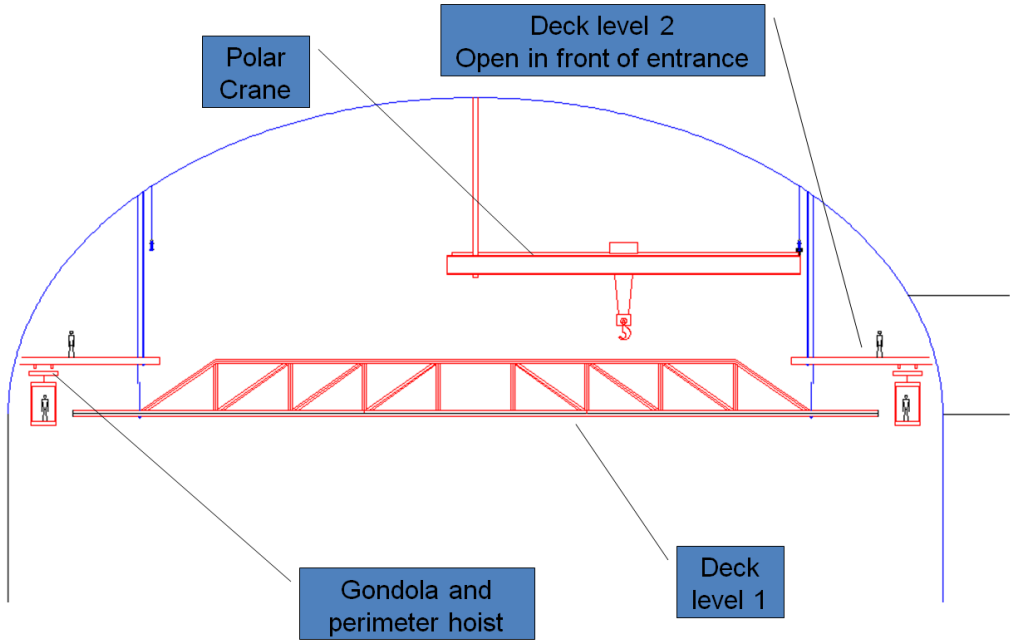

Figure above shows the conceptual design of detector deck and permanent access equipment.

Figure above shows a double and a single mast climber. We plan to use 4 double mast climbers that can cover the entire perimeter of detector.

Assumptions/Interfaces

The interface between this WBS and cavern construction is very important to construction of both systems. We are continually working with cavern design group and vessel and liner contractors to refine the interfaces, requirements and cost estimates.

Constraints

The equipment listed are large and delivery to 4850 must be well understood. All components will be designed to fit the cage and lift constraints.

Comments

This WBS does not include the costs for equipment needed for vessel slip forming, or to lift the deck assembly from 5117L to 4850L. These are included in other elements.

130.04.02.09 Installation Equipment

WBS LEVEL 5	ACTIVITY ID	ACTIVITY DESCRIPTION	START DATE	FINISH DATE	DURATION	RESOURCE	HOURS	COST	TOTAL with Escalation
130.04.02.09.01 Permanent (Go	WC2890	Installation Equipment - Permanent (Gc	1/11/2010	9/10/2010	170	BNL M&S CE from DK: Mechanical Engineer	172	11,887	11,887
						BNL M&S CE from UW: Mechanical Engineer	172	15,614	15,614
		Installation Equipment - Permanent (Gondolas) - Co Total					343	27,502	27,502
	WC2900	Installation Equipment - Permanent (Gc	10/26/2012	1/6/2015	543	BNL M&S CE from DK: Mechanical Engineer	174	12,030	12,712
						BNL M&S CE from UW: Mechanical Engineer	174	15,802	16,698
		Installation Equipment - Permanent (Gondolas) - Pr Total					348	27,832	29,411
	WC2910	Installation Equipment - Permanent (Gc	1/7/2015	6/8/2016	359	BNL M&S CE from DK: Mechanical Engineer	172	11,930	13,222
						BNL M&S CE from UW: Mechanical Engineer	172	15,671	17,368
		Installation Equipment - Permanent (Gondolas) - Fi Total					345	27,601	30,591
	WC2930	Installation Equipment - Permanent (Gc	6/9/2016	12/8/2016	131	BNL M&S CE from DK: Mechanical Engineer	172	11,881	13,481
		Installation Equipment - Permanent (Gondolas) - Pr Total					172	11,881	13,481
	WC2940	Installation Equipment - Permanent (Gc	9/15/2017	1/4/2018	80	BNL M&S CE from UW: Mechanical Engineer	171	15,569	18,378
		Installation Equipment - Permanent (Gondolas) - Pr Total					171	15,569	18,378
	WC2942	Installation Equipment - Permanent (Gc	10/12/2018	7/18/2019	200	BNL M&S CE from DK: Mechanical Engineer	172	11,908	14,493
						BNL M&S CE from UW: Mechanical Engineer	172	15,642	19,037
		Installation Equipment - Permanent (Gondolas) - Fa Total					344	27,550	33,531
	WC2955	Installation Equipment - Permanent (Gc	10/12/2018	7/18/2019	200	BNL M&S CE Costs		1,384,850	1,713,613
		Installation Equipment - Permanent (Gondolas) - Fa Total						1,384,850	1,713,613
	WC2970	Installation Equipment - Permanent (Gc	9/27/2019	3/26/2020	130	BNL M&S CE from DK: Mechanical Engineer	172	11,880	14,841
						BNL M&S CE from UW: Mechanical Engineer	172	15,605	19,495
						BNL M&S CE from UW: Travel		7,426	9,431
						BNL M&S CE from DK: Travel		7,800	9,906
		Installation Equipment - Permanent (Gondolas) - In Total					343	42,711	53,673
130.04.02.09.01 Permanent (Gondolas) Total							**2,066**	**1,565,495**	**1,920,179**
130.04.02.09.02 Personnel (Elev	WC2990	Installation Equipment - Personnel (Ele	1/11/2010	10/24/2012	700	BNL M&S CE from DK: Mechanical Engineer	126	8,723	8,915
		Installation Equipment - Personnel (Elevator) - Co Total					126	8,723	8,915
	WC3000	Installation Equipment - Personnel (Ele	10/25/2012	1/6/2015	544	BNL M&S CE from DK: Mechanical Engineer	169	11,675	12,337

	WC3000	Installation Equipment - Personnel (Elevator) - Pr Total					169	11,675	12,337
	WC3010	Installation Equipment - Personnel (Ele	1/7/2015	6/8/2016	359	BNL M&S CE from DK: Mechanical Engineer	129	8,948	9,917
		Installation Equipment - Personnel (Elevator) - Fi Total					129	8,948	9,917
	WC3040	Installation Equipment - Personnel (Ele	12/9/2016	3/30/2017	80	BNL M&S CE Costs		218,221	256,017
		Installation Equipment - Personnel (Elevator) - Pr Total						218,221	256,017
	WC3050	Installation Equipment - Personnel (Ele	3/31/2017	7/20/2017	80	BNL M&S CE from DK: Mechanical Engineer	257	17,779	20,515
		Installation Equipment - Personnel (Elevator) - Fa Total					257	17,779	20,515
130.04.02.09.02 Personnel (Elevator) Total							**681**	**265,346**	**307,701**
130.04.02.09.03 Temporary (Ma	WC3090	Installation Equipment - Temporary (M	1/11/2010	10/22/2012	698	BNL M&S CE from DK: Mechanical Engineer	175	12,081	12,345
						Mechanical Engineer P2	175	10,101	16,480
		Installation Equipment - Temporary (Mast Climber) Total					349	22,182	28,826
	WC3100	Installation Equipment - Temporary (M	10/23/2012	12/30/2014	542	BNL M&S CE from DK: Mechanical Engineer	173	12,008	12,684
						Mechanical Engineer P2	173	10,040	14,052
		Installation Equipment - Temporary (Mast Climber) Total					347	22,048	26,737
	WC3110	Installation Equipment - Temporary (M	12/31/2014	5/31/2016	357	BNL M&S CE from DK: Mechanical Engineer	171	11,864	13,144
						Mechanical Engineer P2	171	9,920	14,562
		Installation Equipment - Temporary (Mast Climber) Total					343	21,783	27,705
	WC3130	Installation Equipment - Temporary (M	3/8/2017	9/4/2017	129	BNL M&S CE from DK: Mechanical Engineer	172	11,878	13,706
						Mechanical Engineer P2	172	9,932	15,185
		Installation Equipment - Temporary (Mast Climber) Total					343	21,810	28,891
	WC3140	Installation Equipment - Temporary (M	6/12/2018	10/1/2018	80	Mechanical Engineer P2	342	19,821	31,123
		Installation Equipment - Temporary (Mast Climber) Total					342	19,821	31,123
	WC3180	Installation Equipment - Temporary (M	6/12/2018	10/1/2018	80	BNL M&S CE Costs		620,308	747,409
		Installation Equipment - Temporary (Mast Climber) Total						620,308	747,409
130.04.02.09.03 Temporary (Mast Climber) Total							**1,724**	**727,952**	**890,691**
Grand Total							**4,470**	**2,558,793**	**3,118,571**

SCOPE OF WORK Per Request

1 each Interior Monorail Track System ---for Swingstage (Shop Primed and Painted Steel) c/w Alignment Channels, Fastening Hardware, End Stops Support Brackets (welded to structural steel) (500 l.f.) Standard 4"*4" Monorail (Straight Sections)

1 each Interior Monorail Track System---for Material Hoist (Shop Primed and Painted Steel) c/w Alignment Channels, Fastening Hardware, End Stops Support Brackets (welded to structural steel) (500 l.f.) Standard 6"*4" Monorail (Straight Sections)

6 each Powered Traverse Monorail Trolley with Friction Drive c/w Radio controlled pendant

2 each 10ft Nominal Modular Aluminum Powered Platform (220 FT service height) c/w (2) Intermediate "C"-Stirrups w. Tirak® Hoists (Dual Suspension),

Standard Bumper Rollers, Casters (all modular sections), , Safety Dog Line, 1000 lbs. Capacity, Upper and Lower Limit, Slack Wire,

Overload Switches, Power Supply Cord and Collecting Bin, Fire Extinguisher, (4) Suspension Wire Ropes.

PRICING
Total budget price, supply and installation, sales tax excluded **US $661,250.00**
Total budget price, supply only, sales tax excluded **US $414,575.00**
Total budget price, installation only, sales tax excluded **US $247,250.00**

INCLUSIONS:
• P.E. stamp for calculations and shop drawings only, by a licensed engineer registered in the State of SD
• Design, fabricate, freight, duty, and installation.
• Manpower during hoisting for coordination and distribution of equipment.
• Maintenance manuals and operations procedures of contract equipment.
• Contractor general liability insurance of $10 million.
• Field testing of contract equipment, random typical and atypical drop, once only.
• Operator training / owner demonstration of contract equipment (x days), once only.
• Steel materials are hot dip galvanized after fabrication, unless noted otherwise.
• 1 year limited warranty from date of acceptance and/or substantial completion of each piece of contract equipment.

EXCLUSIONS:
The following items to be provided by others:

• Flashing, sealing, cutting / patching deck, insulation, roofing, waterproofing etc.
• Electrical receptacles c/w strain relief anchor, water supply, concrete roof pavers.
• Material hoists and/or cranes and/or associated costs.
• Integrity of the structure to withstand applied loads with required factor of safety.
• Any additional structural support steel, supplementary metal deck support steel and/or reinforcing of existing structure to withstand applied loads.
• Supply and installation of intermittent stabilization anchors / vertical tie-in guide track.
• Access doors / panels / windows to permit monorail rigging
• Temporary power for the purpose of installing and/or testing of equipment
• State Sales Tax

CLARIFICATIONS:

1. Self-Powered Staging Power Requirements (208V–3PH–60HZ; 30 Amp)

2. Proposal is based on free uninterrupted use of service elevator during regular business hours. All work to be performed Monday thru Friday from 8 am to 4 pm. We trust our offer is of interest to you and look forward to receiving your further instructions. In the meantime, if you have any questions, do not hesitate to contact me.

3. Per earlier discussions, monorail will be installed AFTER the complete installation of the QuikDeck structure, and will be installed from the QuikDeck. Any changes in the installation schedule could result in the need for temporary scaffold structures. Such changes will result in additional charges.

Original Message --------
Subject:RE: FW: Mast Climbers for Project
Date: Thu, 22 Oct 2009 22:50:30 -0500
From: Potts, Matt <Matt.Potts@safway.com>
To: Jack Fowler <fowler@phy.duke.edu>
CC: Potts, Matt <Matt.Potts@safway.com>

1300SD - $168,221.35 FOB Lithonia, GA, plus all applicable taxes
3000TD - $285,871.36 FOB Lithonia, GA, plus all applicable taxes
ACT8 - $138,428.57 (EACH) FOB Lithonia, GA, plus all applicable taxes

Matt Potts
Product Manager
Ground Based Motorized Products
ThyssenKrupp Safway, Inc.
mailto:matt.potts@safway.com
773-596-6899 (c)

Potts, Matt wrote:
<<Fowler rough idea.zip>> 1-Review the attached rough drawing...it gives you and idea of what one unit would look like. 160' of mast with a 40' work platform. We can install a 2500 pound crane directly on the mast to move material up and down. However, with 8000 pound capability, moving at 40'/min, I think we can load enough of the light amplifiers onto the platform at the start of the shift and leave the crane arm out of the mix. Depending on how you want to approach the job, we can put units around the entire circumference, or use only 1 or two. As I envision the job, we would provide labor, supervision and training for the install of the initial machines. IF you start at the top installing the amplifiers, you could remove tower sections and ties as you come down. When you complete a section, we should then come back and assemble the entire machine in a new spot. If you do the dismantle as you come down the wall, that saves a lot of time.

2-This wouldn't save any time...you need to install the drive unit with the base...the mast goes through the center of the drive unit...you cannot install the mast to height and then "attach" drive unit. Really don't see this being an issue...depending on how you are going to approach your labor - multiple teams, multiple sections at once, or one area at a time-we can accommodate your labor schedule.

3. No, the TPM cannot move up and down unattended. IF you only want to move material, we can provide a material hoist (MHM), which moves at 80'/min, has various capacities and is run with a pendant control.

4. Both units have emergency descent capability...can be lowered manually in case of complete power failure. Again, we have the crane arms for the mast climbers (see #1 above), but nothing like that for the TPM.

5.
1300SD - 2900 pound, 5'3"x10'6" platform, man and material lift, 40'/min
$6,000/28 day rental period 4 day install, 4 day dismantle
3000TD - 6600 pound, 5'3"x10'6" platform, man and material lift, 40'/min
$11,000/28 day rental period 7 day install, 7 day dismantle
ACT8 - 8000 pound capacity, 40' work platform, 40'/min
$5,000/28 day rental period 4 day install, 4 day dismantle

For these units, we would have a 3 man crew...typically, we use a customer provided forklift...any chance? Labor rates will be determined by local branch. We can provide as many of each unit as you need for as long as you need.

Here are my concerns...numbers above assume easy access to install site...that will not be the case here, so there will be additional time for moving all equipment to the install site. Also, we need to lower everything to bottom of pit for install. cannot be installed from top...do you have any ideas about this? The numbers above are VERY rough, are subject to engineering (assuming fairly standard install), and should be viewed as such.

Call me after you review.

Matt Potts
Product Manager
Ground Based Motorized Products
ThyssenKrupp Safway, Inc.
mailto:matt.potts@safway.com
773-596-6899 (c)

LBNE	**LBNE Water Cherenkov Detector** **BASIS of ESTIMATE FORM (BoE)**	**Date of Estimate: October 5, 2011** **Revision #: 1** **Prepared By: Robert Paulos** **Approved By:** **Level 2 Manager**

WBS Number: **130.04.02.10**	**WBS Title:** **Top Veto**

WBS Dictionary:

This includes all the systems and components that are part of the top veto system.

Cost Type **(check all that apply):** _x__ EDIA Material _x__ EDIA Labor _x__ MFG Material _x__ MFG Labor	**Costing Method** **(check all that apply):** _x_ Engineering Judgment ___Physicist Estimate ___ Level of Effort ___ Vendor Quote (attached) ___ Catalog Price (specify) ___ Prior purchase ___ Prior experience ___ Parametric Estimate ___ Other- Description:_____

Attach Relevant Documents (including but not limited to):

M&S Contingency (%)**: 38**	**Labor Contingency** (%)**: 24**

Basis of Estimate

Details of Estimate:

This BOE includes all materials and supplies, labor, and capital equipment necessary to design and fabricate a top veto for the WCD. Specific items include the PMTs and associated electronics for readout, a simple LED timing calibration system, interface hardware for mounting to the deck, and scientific and technical labor costs required to support top veto design, simulation, test, and fabrication activities.

The baseline design of the water Cherenkov detector (WCD) for LBNE includes a top veto system to tag cosmic muons entering the fiducial volume of the WCD, which is a potential background to astrophysical neutrino measurements. The top veto design consists of an array of horizontally oriented PMTs mounted within the PMT support framework in the approximately 1.8 m space between the deck and the light barrier.

Previous studies and simulations suggest that a PMT spacing of 4 m or less provides complete geometrical coverage for cosmic muons entering the fiducial volume from the top. The present design of the PMT framework beneath the deck indicates a spacing of 86 cm for the downward-facing, large PMTs. This suggests a preliminary design of one veto PMT(s) per 4 x 4 unit of large PMTs for a total of approximately 200 top veto PMTs. The baseline design for the top veto will utilize 12 inch PMTs that are identical to PMTs used throughout the detector.

To increase reflectivity, support structures and services in the veto region will likely be covered with reflective material such as Tyvek®. A timing calibration system will also be required, consisting of strings of LEDs or laser light delivered by optical fibers.

Trade studies, simulations, and tests will be performed on top veto elements and system. Results will inform the final design. Cost savings may be achieved by reuse of PMTs from other experiments, e.g. MiniBooNE, or by utilizing a PMT that is less expensive than the 12 inch HQE PMTs currently planned.

Installation costs are not included in this cost element. They are included in WBS 1.4.9.

Material Details

[This table is for reference only and doesn't belong in the final BOE]

Top veto cost - Standard 12 inch HQE PMTs				
Cost category	Hours (all years)	Quantity	item cost	Cost total
PMT plus electronics		200	3000	600000
calibration system		1	50000	50000
Structure (hangers)		200	50	10000
Tyvek 1073B		10000	2.6	26000
Labor				
Scientist	3600		92.67	333612
Designer	750		24.7	18525
Total	4350			$1,038,137

Top Veto Conceptual Design Layout

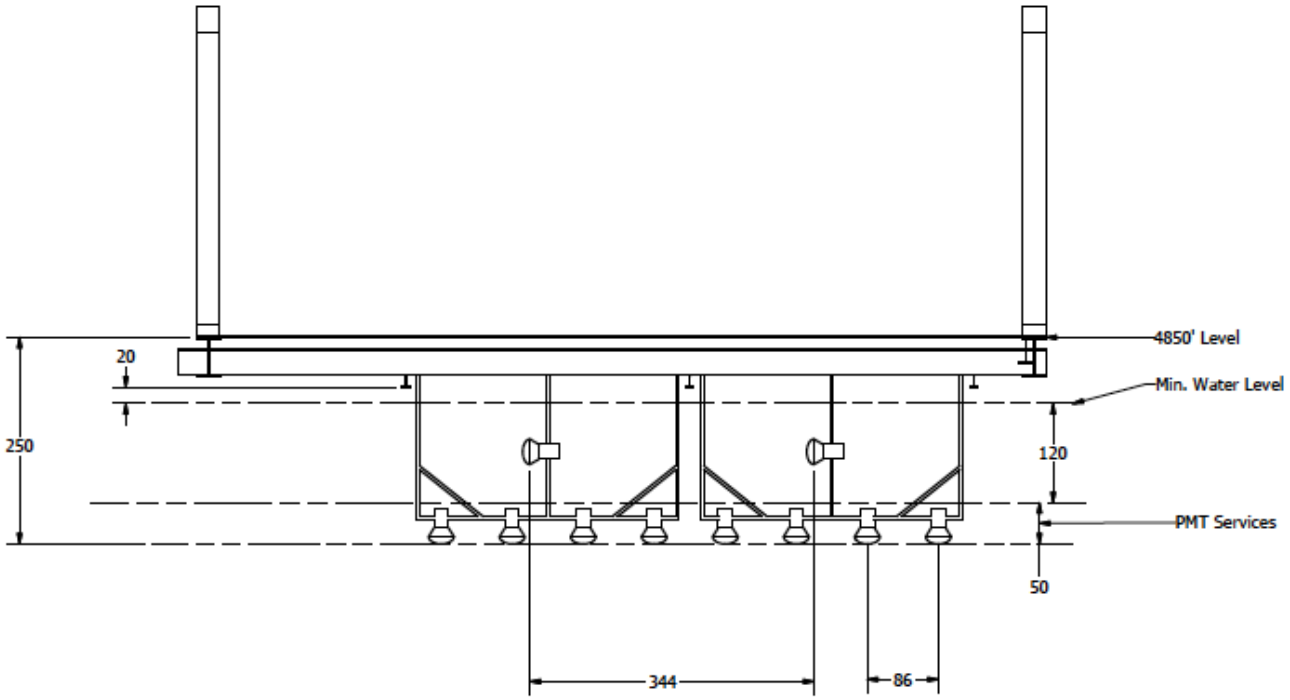

Contingency and Method

Assumptions/Interfaces
The design for mounting of the top veto PMTs will be incorporated into the deck design. The deck is the major interface to be considered along with mounting of tyvek or other suitable reflective material on the upper and lower surfaces of the top veto region.

Installation costs are included elsewhere.

Constraints

Comments

130.04.02.10 Veto System

WBS LEVEL 5	ACTIVITY ID	ACTIVITY DESCRIPTION	START DATE	FINISH DATE	DURATION	RESOURCE	HOURS	COST	TOTAL with Escalation
130.04.02.10 Veto System	WC3210	Veto - Conceptual Design	3/23/2011	8/12/2011	100	BNL M&S CE from CD: Sr. Physicist/Scientist	310	36,161	37,137
		Veto - Conceptual Design Total					310	36,161	37,137
	WC3220	Veto - Preliminary Design	6/25/2012	11/15/2012	100	BNL M&S CE from CD: Sr. Physicist/Scientist	600	69,988	72,351
		Veto - Preliminary Design Total					600	69,988	72,351
	WC3230	Veto - Final Design	1/8/2014	10/23/2014	200	BNL M&S CE from CD: Sr. Physicist/Scientist	1,000	116,647	124,525
						BNL M&S CE from UN: Mechanical Designer	750	34,620	36,958
		Veto - Final Design Total					1,750	151,268	161,483
	WC3235	Veto - Fabrication Support	4/30/2019	7/23/2019	60	BNL M&S CE from CD: Sr. Physicist/Scientist	480	55,991	68,146
		Veto - Fabrication Support Total					480	55,991	68,146
	WC3240	Veto - Fabrication	4/30/2019	7/23/2019	60	BNL M&S CE from CD: Sr. Physicist/Scientist	480	55,991	68,146
						BNL M&S CS PO Purchases		680,000	983,634
		Veto - Fabrication Total					480	735,990	1,051,780
	WC3250	Installation	8/18/2020	11/10/2020	60	BNL M&S CE from CD: Sr. Physicist/Scientist	480	55,991	70,856
		Installation Total					480	55,991	70,856
130.04.02.10 Veto System Total							**4,100**	**1,105,388**	**1,461,753**
Grand Total							**4,100**	**1,105,388**	**1,461,753**

	LBNE Water Cherenkov Detector **BASIS of ESTIMATE FORM (BoE)**	**Date of Estimate: 18-Nov-2011** **Revision #:** **Prepared By: P. Mantsch, M. Kaducak** **Approved By:** **Level 2 Manager**

WBS Number: **130.04.03.01**	**WBS Title:** **PMT Management and Safety**

WBS Dictionary:

This element includes the general management of the photon detector system and all activities related to the management and administration to ensure that construction activities meet the project goals and that work is done in accordance with DOE Cost, Schedule and Technical Guidelines.

Cost Type **(check all that apply):** __x_ EDIA Material __x_ EDIA Labor ___ MFG Material ___ MFG Labor	**Costing Method** **(check all that apply):** ___ Engineering Judgment ___Physicist Estimate __x_ Level of Effort ___ Vendor Quote (attached) ___ Catalog Price (specify) ___ Prior purchase _x__ Prior experience ___ Parametric Estimate ___ Other- Description:_____

Attach Relevant Documents (including but not limited to):

M&S Contingency (%)**: 40**	**Labor Contingency** (%)**: 40**

Basis of Estimate

Details of Estimate:

The proposed management effort and M&S over the four phases of the project are contained in the table below:

Task Name	Labor Resource Function and Titles (Titles from Master Resource List)	**EDIA Labor** % effort for duration or number of hours for each labor type respectively	**MFG Labor** % effort for duration or number of hours for each labor type respectively
PMT Conceptual Design Phase Management	PMT WG Manager (Scientist)	50%	
	PMT WG Engineer (Electrical Engineer)	75%	
	Admin (Admin)	10%	
PMT Preliminary Design Phase Management	PMT WG Manager (Scientist)	50%	
	PMT WG Engineer (Electrical Engineer)	75%	
	QA Engineer (Electronics Engineer)	50%	
	ES&H (ES&H)	10%	
	Admin (Admin)	40%	
PMT Final Design Phase Management	PMT WG Manager (Scientist)	50%	
	PMT WG Deputy Mgr (Scientist)	50%	
	PMT WG Engineer (Electrical Engineer)	75%	
	QA Engineer (Electronics Engineer)	50%	
	ES&H (ES&H)	10%	
	Admin (Admin)	40%	
PMT Construction Phase Management	PMT WG Manager (Scientist)	50%	
	PMT WG Deputy Mgr (Scientist)	50%	
	PMT WG Engineer (Electrical Engineer)	75%	
	QA Engineer (Electronics Engineer)	50%	
	ES&H (ES&H)	10%	
	Admin (Admin)	50%	
PMT Closeout Phase Management	PMT WG Manager (Scientist)	50%	
	PMT WG Deputy Mgr (Scientist)	50%	
	PMT WG Engineer (Electrical Engineer)	75%	
	QA Engineer (Electronics Engineer)	50%	
	ES&H (ES&H)	10%	
	Admin (Admin)	50%	

Table 1. LOE estimate of PMT Subproject Management Labor

Management budget overview

The duties and responsibilities of the PMT working group are shown below along with estimated effort and M&S costs. The typical industry management cost compared to the total project cost is between ten and fifteen percent. Recent Fermilab projects (DECam and MINERvA) fall into this range. The total estimated cost for the LBNE PMT management is $5.96M out of the total estimated PMT subproject cost of $93M (without contingency and escalation). This is a ratio of 6.5% for the subsystem. For the case of the PMT subsystem a major part of the cost is the PMT procurement. Even if the PMT costs are subtracted completely from the project costs the subproject management office cost is 18%. However, since overseeing the procurement of the PMTs is a major management responsibility, not all of the cost of the PMTs can be discounted from the project cost in calculating the management/project ratio. The management costs described here to deliver 29,000 PMT fully tested assemblies are reasonable.

PMT subsystem managers

The PMT subsystem manager is responsible for the design, procurement, production, testing, delivery and installation-oversight of the PMT assembly including associated quality assurance and ES&H. The deputy subsystem manager assists the subsystem manager in her/his duties and assumes her/his duties in his absence. It is assumed that responsibilities of the level 3 management of the PMT subsystem can be covered by 0.5 FTE during the conceptual and preliminary design phase, and one FTE during final design, construction, and closeout. The duties are most sensibly split between two people, each with a half time commitment. The responsibilities of the PMT subsystem and staff are spread over the four phases of project construction as follows.

Conceptual, Preliminary and Final Design.

1. Organize, and direct the day to day activities of the PMT working group necessary to design a PMT assembly to achieve LBNE technical, cost and schedule objectives.
2. Develop the performance requirements that meet project objectives.
3. Assemble and the edit the PMT chapter of the Conceptual Design Report and the Technical Design Report.
4. Assist the project engineer to schedule and follow up on internal technical reviews including conceptual, preliminary and final design reviews. Schedule special manager's reviews as needed.
5. Coordinate the activities of the level 4 task groups.
6. Interface with the PMT vendors.
7. Guide procurement activities including preparation and evaluation of RFPs needed as part of the procurement process.
8. Assemble and convene the PMT Selection and Procurement Advisory Committee as needed.
9. Work with the PMT project engineer to prepare the cost, schedule and other documents needed for Critical Design Reviews 1, 2 and 3.
10. Prepare and maintain system configuration documents including the Performance Requirements and Technical Specifications.
11. Prepare progress, cost and schedule reports as required.
12. Oversee the development and implementation of a PMT assembly Quality Assurance Plan.
13. Oversee the development and implementation of a PMT subsystem Environment, Safety and Health Plan.
14. Prepare Memoranda of Understanding with collaborating institutions contributing to the design,

production and testing of the PMT assemblies.
15. Participate in the change control process and allocation of contingency funds

Production/Construction

1. Organize, and direct the day to day activities of the PMT working group necessary to produce, test and deliver PMT assemblies that meet LBNE technical, cost and schedule objectives.
2. Work with the project engineer to organize, schedule and follow up on internal production readiness, operation readiness reviews. Organize special manager's design reviews as needed.
3. Coordinate the activities of the level 4 task groups that participate in testing and quality assurance.
4. Continue to interface with the PMT vendors to assure schedule and quality goals are met.
5. Work with the PMT project engineer to track costs and schedule for the procurement and production of the PMT assemblies and their subcomponents.
6. Maintain system configuration documents including the Performance Requirements and Technical Specifications.
7. Prepare progress, cost and schedule reports as required.
8. Oversee the implementation of PMT assembly Quality Assurance Plan.
9. Oversee the implementation of a PMT subsystem Environment, Safety and Health Plan.
10. Update Memoranda of Understanding annually or as appropriate with collaborating institutions contributing to production and testing of the PMT assemblies.
11. Participate in the change control process and allocation of contingency funds

PMT project engineer

The PMT project engineer is responsible for engineering and technical oversight of the design, procurement, production, testing and delivery of the PMT assemblies. Given the scope of responsibilities of the PMT effort for LBNE, a 0.75 FTE project engineer for the duration of the project is assumed. Duties of the project engineer are as follows.

Conceptual, Preliminary and Final Design.

1. Lead the preparation of the PMT subsystem cost estimate and resource loaded schedule with the help of the PMT L4 managers.
2. Organize, schedule and follow up on internal technical reviews including conceptual, preliminary, final design reviews.
3. Coordinate technical work and interfaces among the institutions participating in the LBNE project.
4. Assist the Subsystem Manager in the preparation of project performance requirements and technical specifications.
5. Assist the Subsystem Manager in the preparation of the Conceptual Design Report and the Technical Design Report
6. Provide support for procurement of project components, materials and services.
7. Track costs and schedules and prepare reports as necessary.
8. Work with the project managers on the implementation of quality assurance and ES&H programs.

Production/Construction

1. Track subsystem costs and schedule for protection and testing.

2. Prepare cost and schedule reports.
3. Organize, schedule and follow up on internal technical reviews including production and operations readiness reviews.
4. Coordinate technical work and interfaces among the institutions participating in the production and testing of the PMT assembly.
5. Provide support for procurement of project components, materials and services.
6. Organize the logistics of movement of materials and components and the delivery of finished PMT assemblies to Homestake.
7. Work with the project managers on the implementation of quality assurance and ES&H programs.

Quality Assurance Engineer.

The Quality Assurance Engineer is responsible for the development, implementation and oversight of the Quality Assurance Program for the design, procurement, production, and testing of the PMT assembly. The Quality Assurance Engineer is a trained quality professional who provides independent oversight every aspect of quality from the design through delivery. The QA engineer reports directly to PMT subsystem manager. Since a coordinated QA program key to achieving our project objectives during all phases of the LBNE PMT effort, this person needs to be at least half time. This person can be sensibly shared with some other aspect of the program.

1. Develop a comprehensive ES&H program that begins with the conceptual design and ends with the installation oversight of the PMT assemblies.
2. Participate actively in the design process including all technical reviews.
3. Assist the PMT subsystem managers in developing the organization, communication and interface links among the institutions participating in the design, production and testing of the PMT assemblies.
4. Perform QA audits of all parts receiving and inspection, subcomponent production, PMT assembly production, testing and quality control.

ES&H professional

The ES&H professional is responsible for the development of a comprehensive ES&H program for the activities of the PMT working group from the design through the delivery of the PMT assemblies. The role of ES&H professional may be filled by different individuals during different phases of the project. A commitment of 0.1 FTE is assumed. Given that this person must be present daily at both the pilot assembly site and production site for the duration of these activities, this level of commitment may be difficult to achieve logistically.

1. Develop an ES&H program for the design, production and testing of the PMT assemblies and its components.
2. Audit the ES&H program on a weekly basis.
3. Participate in all technical reviews.
4. Provide on-site, daily ES&H oversight at both the pilot and full production facilities for PMT assemblies.

Administration

The administrative assistant provides clerical and administrative support for the PMT management team. A

0.4 FTE commitment is assumed.

1. Make travel arrangements.
2. Assemble and edit progress reports.
3. Develop and maintain a website for communication within the PMT working group.
4. File documentation and communications.

Travel and M&S

The largest share of the PMT management M&S budget will be devoted to travel related to the oversight of PMT working group activities. It is assumed that each member of the management team will travel one time per month during the design periods for a total of $38,400/year at $800/trip. Increased oversight travel during the production phase will exceed one trip per month per team member for an estimated total of $50,400/yr. Consumables and other M&S are estimated at $9,600/year.

Contingency & Method:
The following methodology from the project office was used for selecting contingency percentages:
M&S Contingency Rules

1. 10% - Items that have been purchased on a previous project for which there is more than one potential vendor.
2. 20% - Items that have been purchased on a previous project but for which there is likely to be only one vendor.
3. 40% - Items that have analogous comparisons to components from other projects but may require additional design considerations.
4. 60% - Items that are similar to components previously designed but, because of an increase in complexity or other considerations, require a significant design time and perhaps prototyping.
5. 80% - 100% - Items that require new design with very little similarity to previously designed components. Significant prototyping.

Labor Contingency Rules

1. 20% - Work that has been done before for which a good estimate exists.
2. 40% - Work that has been done before but contains some minor uncertainty because of minor changes.
3. 60% - Work for which previous experience applies but because of increased complexity or uncertainty may require additional manpower.
4. 80% - Work that represents a scope with minor previous experience. Requires some prototyping.
5. 100% - Work that has never been done before and which requires significant prototyping.

Based on these rules a 40% contingency was used for both Labor and M&S.

Assumptions/Interfaces

Constraints

As management tasks are naturally level of effort, the estimate is linked to the overall project schedule and milestones. That is, if the overall project duration is increased the management estimate will adjust upward accordingly.

Comments

130.04.03.01 PMT Management and Safety

WBS LEVEL 5	ACTIVITY ID	ACTIVITY DESCRIPTION	START DATE	FINISH DATE	DURATION	RESOURCE	HOURS	COST	TOTAL with Escalation
130.04.03.01 PMT Management	PD11620	PMT Conceptual Design Phase Manage	1/11/2010	5/22/2012	593	Accelerator Physicist Experimental	2,036	104,084	310,032
						Administrative Support	409	10,086	30,633
						FNAL M&S CE Costs		13,438	13,535
						FNAL M&S CS Travel		69,998	81,581
						Non-Sr. Electrical Design Engineer	3,048	142,978	425,905
		PMT Conceptual Design Phase Management Total					5,494	340,584	861,685
	PD11630	PMT Preliminary Design Phase Manage	8/22/2012	12/4/2013	320	Accelerator Physicist Experimental	1,065	54,455	167,827
						Administrative Support	851	20,983	65,646
						Electronics Design Engineer	533	25,286	77,930
						FNAL M&S CE Costs		12,479	13,178
						FNAL M&S CS Travel		49,920	61,245
						General ES&H	297	14,717	45,358
						Non-Sr. Electrical Design Engineer	1,597	74,903	230,864
		PMT Preliminary Design Phase Management Total					4,343	252,744	662,049
	PD11640	PMT Final Design Phase Management	12/5/2013	2/4/2015	289	Accelerator Physicist Experimental	2,013	102,890	327,146
						Administrative Support	806	19,876	64,154
						Electronics Design Engineer	1,008	47,845	152,127
						FNAL M&S CE Costs		9,999	10,914
						FNAL M&S CS Travel		23,999	30,432
						Non-Sr. Electrical Design Engineer	1,509	70,765	225,018
		PMT Final Design Phase Management Total					5,336	275,374	809,792
	PD11650	PMT Construction Phase Management	2/5/2015	8/4/2021	1684	Accelerator Physicist Experimental	11,613	593,520	2,091,595
						Administrative Support	5,810	143,218	512,327
						Electronics Design Engineer	5,806	275,599	971,225
						FNAL M&S CE Costs		59,999	72,578
						FNAL M&S CS Travel		314,992	442,656
						Non-Sr. Electrical Design Engineer	8,706	408,398	1,439,282
		PMT Construction Phase Management Total					31,935	1,795,726	5,529,664
	PD11660	PMT Closeout	8/5/2021	2/28/2022	148	Accelerator Physicist Experimental	1,028	52,517	203,548
						Administrative Support	514	12,660	49,809
						Electronics Design Engineer	515	24,421	94,652
						FNAL M&S CE Costs		5,471	7,278
						FNAL M&S CS Travel		21,888	33,825
						Non-Sr. Electrical Design Engineer	770	36,101	139,929
		PMT Closeout Total					2,825	153,057	529,042
130.04.03.01 PMT Management and Safety Total							**49,933**	**2,817,486**	**8,392,231**
Grand Total							**49,933**	**2,817,486**	**8,392,231**

LBNE	**LBNE Water Cherenkov Detector** **BASIS of ESTIMATE FORM (BoE)**	**Date of Estimate: 26-Jun-2012** **Revision #: 3** **Prepared By: M. Kaducak** **Approved By:** **Level 2 Manager**

WBS Number:	**WBS Title:**
1.04.03.02	**PMT**

WBS Dictionary:

Includes Characterization and selection, procurement, supplier management, and delivery to the PA integration site(s) of all PMTs required for the project.

Cost Type **(check all that apply):**	**Costing Method** **(check all that apply):**
__x_ EDIA Material __x_ EDIA Labor __x_ MFG Material ___ MFG Labor	_x__ Engineering Judgment _x__Physicist Estimate ___ Level of Effort ___ Vendor Quote (attached) ___ Catalog Price (specify) ___ Prior purchase ___ Prior experience ___ Parametric Estimate ___ Other- Description:_____

Attach Relevant Documents (including but not limited to):

M&S Cost (Total Cost FY10 $**):** **$62,218,986**	**Labor Hours**: **89,722** **Labor Cost (Total Cost FY10 $):** **$2,666,860**
M&S Contingency (%)**:**	**Labor Contingency** (%)**:**

Basis of Estimate

This BOE includes the following WBS Level 5 elements:
1.4.3.2.1 – PMT Optical/Electronic Characterization
1.4.3.2.2 – PMT Mechanical Characterization
1.4.3.2.3 – PMT Selection
1.4.3.2.4 – PMT Procurement

WBS 1.4.3.2.1 - PMT Optical/Electronics Characterization
This element includes evaluating the performance of candidate PMTs prior to the final procurement, providing performance information for optimizing detector design, and developing a complete performance model for use in data analysis. This work is most efficiently performed at universities already in possession of the required measurement equipment and experience. Therefore the requirements for M&S are very modest. The labor estimates are based on experience with SNO, Super-K, DoubleChooz, Auger, and others and are in the table below. The university groups envisioned to be involved are UPenn, Colorado State University, Drexel University, University of California-Davis, and University of Wisconsin.

PMT Optical/Electronic Characterization Estimate

Task ID	Task Name	Duration (working days)	**EDIA M&S** (FY2010$ direct cost, without overhead or escalation)	**MFG M&S** (FY2010$ direct cost, without overhead or escalation)	Labor Resource Function and Titles (Titles from Master Resource List)	**EDIA Labor** % effort for duration or number of hours for each labor type respectively	**MFG Labor** % effort for duration or number of hours for each labor type respectively
	Candidate PMT Evaluation				Penn Postdoc (off project)	2000 hrs	
					Penn Postdoc (on project)	1000 hrs	
					Penn Elec Tech	240 hrs	
					Penn Gen Labor	4150 hrs	
			$ 15,000.00		Penn Undergrad	1500 hrs	
					Drexel Scientist	400 hrs	
					Drexel Gen Labor	1375 hrs	
					Davis Postdoc	500 hrs	
					Davis Gen Labor	6038 hrs	
					Davis Grad Student (off project)	1750 hrs	
	Candidate PMT Performance Optimization				Penn Postdoc (off project)	625 hrs	
					Penn Postdoc (on project)	400 hrs	
					Penn Elec Tech	562 hrs	
					Penn Undergrad	4000 hrs	
					Drexel Gen Labor	2000 hrs	
					UW Postdoc	1000 hrs	
					UW Mech Tech	500 hrs	
					UW Scientist	350 hrs	
	Production PMT Characterization				Davis Postdoc	2000 hrs	
					Davis Grad Student (off project)	1750 hrs	
					Davis General Labor	875 hrs	
					UW Postdoc	300 hrs	
					UW General Labor	300 hrs	
				$ 48,960.00	CSU Scientist	950 hrs	
					CSU Postdoc	1050 hrs	
					CSU Mech Tech	2550 hrs	
					CSO Grad Student	2550 hrs	
	Total		$ 15,000.00	$ 48,960.00			

WBS 1.4.3.2.2 – PMT Mechanical Characterization

This element includes the process of validating the pressure rating of the candidate PMTs and determining the overall likelihood of a cascade implosion event. Tools for performing these functions include dynamic simulations, glass evaluation, and hydrostatic testing both in a small pressure vessel for determining the static pressure rating and in a large Naval pressure vessel for implosion testing. The program also includes sample testing during production.

Costs for upgrading the small pressure vessel at Brookhaven (~$50k) and re-commissioning the Naval pressure vessel ($416k) represent actual costs since this work is complete. The Navy has informed us that each test will cost ~$20k and that there will be ongoing maintenance. Each test campaign will likely include three tests, so $60k is budgeted for each test campaign. Five campaigns are estimated. Each

candidate PMT will need to be tested as will complete PMT assemblies (PAs) and the mounting system.

The pressure and implosion tests are being performed with “mechanical sample” PMTs, which may or may not function optically but are representative mechanically and less inexpensive (~$800ea) than fully functional PMTs.

The labor hours are estimated by the responsible design engineers and include time for performing dynamic simulations and setting up and conducting tests in both the BNL and NAVSEA pressure vessels.

PMT Mechanical Characterization Estimate

Task ID	Task Name	**EDIA M&S** (FY2010$ direct cost, without overhead or escalation)	**MFG M&S** (FY2010$ direct cost, without overhead or escalation)	Labor Resource Function and Titles (Titles from Master Resource List)	effort for duration or number of hours for each labor type respectively	effort for duration or number of hours for each labor type respectively
	Test glass sample coupons (Alfred Univ)	$23,000.00				
	Analyze slow pressure test results (Alfred Univ)	$100,000.00				
	Develop simulation model and procure software	$42,000.00				
	Perform PMT Implosion Simulation			BNL Sr Mech Eng	160 hrs	
	Setup and Perform PIU Implosion Simulation #1			BNL Sr Mech Eng	260 hrs	
	Setup and Perform PIU Implosion Simulation #2			BNL Sr Mech Eng	260 hrs	
	Setup and Perform PIU Implosion Simulation #3			BNL Sr Mech Eng	260 hrs	
				CSU Postdoc	1050 hrs	
				CSU Mech Tech	2550 hrs	
				CSO Grad Student	2550 hrs	
	Upgrade BNL Pressure Vessel	$50,383.00		BNL Sr Mech Eng	130 hrs	
				BNL Mech Eng	40 hrs	
				BNL Mech Tech	265 hrs	
	Procure mechanical sample and dummy PMTs for Test Series #1	$35,250.00				
	Perform Small Sample Test (Qty.4)			BNL Sr Mech Eng	40 hrs	
				BNL Mech Tech	80 hrs	
	Plan, Setup, and Perform Prototype Slow Pressure Test Series #1	$3,000.00		BNL Sr Mech Eng	260 hrs	
				BNL Mech Tech	260 hrs	
	Procure Mechanical Samples for Test Series #2	$50,000.00				
	Setup and Perform Prototype Test Series #2	$16,000.00		BNL Sr Mech Eng	260 hrs	
				BNL Mech Tech	780 hrs	
	Procure mechanical sample PMTs for Test Series #3 (Qty.200)	$200,000.00				
	Setup and Perform Prototype Test Series #3			BNL Sr Mech Eng	400 hrs	
				BNL Mech Eng	400 hrs	
				BNL Mech Tech	1040 hrs	
	Production Year #1 Sample Testing		$28,000.00	BNL Grad Student (off project)	6240 hrs	
				BNL Mech Eng	1000 hrs	
				BNL Mech Tech	1780 hrs	
	Production Year #2 Sample Testing		$15,500.00	BNL Grad Student (off project)	6240 hrs	
				BNL Mech Tech	1780 hrs	
	Production Year #3 Sample Testing		$35,000.00	BNL Grad Student (off project)	6240 hrs	
				BNL Mech Tech	1780 hrs	
	Production Year #4 Sample Testing		$35,000.00	BNL Grad Student (off project)	6240 hrs	
				BNL Mech Tech	1780 hrs	
	Production Year #5 Sample Testing		$35,000.00	BNL Grad Student (off project)	6240 hrs	
	CRADA preparation for NAVSEA facility recommissioning and Test #1	$416,000.00				
	Setup and Perform Test #1			BNL Sr Mech Eng	170 hrs	
				BNL Mech Eng	130 hrs	
				BNL Mech Des	100 hrs	
				BNL Mech Tech	305 hrs	
		$5,000.00		Travel		
	Setup and Perform Test #2	$60,000.00		BNL Sr Mech Eng	140 hrs	
				BNL Mech Eng	140 hrs	
				BNL Mech Des	260 hrs	
				BNL Mech Tech	130 hrs	
		$5,000.00		Travel		
	Setup and Perform Test #3	$100,000.00		BNL Sr Mech Eng	120 hrs	
				BNL Mech Eng	120 hrs	
				BNL Mech Des	260 hrs	
				BNL Mech Tech	130 hrs	
		$5,000.00		Travel		
	Setup and Perform Test #4	$100,000.00		BNL Sr Mech Eng	120 hrs	
				BNL Mech Eng	120 hrs	
				BNL Mech Des	260 hrs	
				BNL Mech Tech	130 hrs	
		$5,000.00		Travel		
	Setup and Perform Test #5	$100,000.00		BNL Sr Mech Eng	120 hrs	
				BNL Mech Eng	120 hrs	
				BNL Mech Des	260 hrs	
				BNL Mech Tech	130 hrs	
		$5,000.00		Travel		
	Total	$1,320,633.00	$148,500.00			

WBS 1.4.3.2.3 – PMT Selection

There are currently at least two viable vendors of PMTs for LBNE and the size of the procurement will require a formal source selection process. Our procurement consultant, Acquisition Strategies, has also suggested a pre-qualification process whereby capabilities and performance of candidate vendors are evaluated and documented for use in final selection. So the major activities in this WBS are developing a selection plan, execution of the pre-qualification, composing and issuing the RFP, and selecting the final PMT source. M&S for this WBS is for the procurement consultant. The labor estimates are in the table below. The resources listed are also envisioned to be the same people as in PMT Management and Safety WBS #1.4.3.1, where the bulk of their time will be charged. It is assumed that, as is typically the case, Fermilab procurement personnel will not be charged to the project.

PMT Selection Estimate

Task ID	Task Name	**EDIA M&S** (FY2010$ direct cost, without overhead or escalation)	**MFG M&S** (FY2010$ direct cost, without overhead or escalation)	Labor Resource Function and Titles (Titles from Master Resource List)	effort for duration or number of hours for each labor type respectively	effort for duration or number of hours for each labor type respectively
	Develop Acquisition Plan Document	$12,000.00		FNAL Scientist	80 hrs	
				FNAL Elec Eng	80 hrs	
	Prequalify Vendor A			FNAL Scientist	60 hrs	
				FNAL Elec Eng	60 hrs	
				FNAL QA Engineer	60 hrs	
	Prequalify Vendor B			FNAL Scientist	60 hrs	
				FNAL Elec Eng	60 hrs	
				FNAL QA Engineer	60 hrs	
	Review production RFP/Q			FNAL Scientist	20 hrs	
				FNAL Elec Eng	20 hrs	
				FNAL QA Engineer	20 hrs	
	Review production bids and select source			FNAL Scientist	80 hrs	
				FNAL Elec Eng	80 hrs	
				FNAL QA Engineer	80 hrs	
	Total	$12,000.00	$0.00			

WBS 1.4.3.2.4 – PMT Procurement

This WBS has three main subelements: Prototype Procurements, Preproduction Procurement, and the Production Procurement.

<u>Prototype Procurements</u>

The purpose of the Prototype procurements is to provide PMTs for the following:

1. Evaluating new products. Vendors have been developing new products relevant to LBNE and the first samples are nearly ready.
2. Further study and characterization of the reference design PMT.
3. Prototyping the PA.

One procurement of PMTs is complete. This procurement was based on available budget, and includes three operational 12” PMTs, eight R7081HQE PMTs (formerly the reference design PMTs), and four 12” mechanical samples. The 12” R11780 HQE PMTs are new products and the mechanical samples are non-functioning or rejected PMTs and will be used for destructive pressure testing.

Other Prototype Procurements currently in process and their estimates include:

1. Mechanical samples from ETL. Qty. 10 at $600 each = $6k.
2. Working 11" PMTs from ETL. Qty.20 at $4k each = $80k.
3. Phase I of Hamamatsu 12" R11780 HQE prototypes. Qty. 10 at $6395/ea = $63.95k.
4. Phase II of Hamamatsu 12" R11780 HQE prototypes. Qty. 10 at $9095/ea = $90.95k (includes shipping).

Planned procurements:

1. It is assumed that one additional prototype procurement will be undertaken to allow a second iteration of the ETL 11" PMTs. It is assumed that this will be $80k.

<u>Preproduction Procurements</u>

The purpose of the Preproduction PMTs is:

1. Validating the PMT assembly and QA process. The required rate of assembly and testing during the production phase is 30 PAs per day. The plan is to create a scaled down assembly and testing setup to verify that, when scaled up, production rates can be met with the planned materials, labor, and facilities.
2. Vendor prequalification. If successful, the vendors will have demonstrated that they can produce PMTs of consistent quality and performance and will be technically qualified to bid.
3. Optical/electrical characterization. The candidate tubes at this phase should be identical, or very nearly so, to those that would be ordered in the production phase. Characterizing the candidate PMTs at this phase will allow simulations using PMT performance parameters that are expected in the final detector. This will allow the final detector configuration to be developed.

The M&S costs include 100 PMTs from each vendor for a total of 200. Our estimate of low quantities of prototypes is $3,934/each. The shipping cost was assumed to be $100/PMT and duty on these items is 3.3%. Therefore the total unit cost is $3,934*1.033+100 = $4,173.64.

PMT Prototype and Preproduction Procurement

Task ID	Task Name	**EDIA M&S** (FY2010$ direct cost, without overhead or escalation)	**MFG M&S** (FY2010$ direct cost, without overhead or escalation)	Labor Resource Function and Titles (Titles from Master Resource List)	**EDIA Labor** % effort for duration or number of hours for each labor type respectively	**MFG Labor** % effort for duration or number of hours for each labor type respectively
	Vendor A Prototype Procurement #1	$44,474.00				
	Vendor B Prototype Procurement #1	$80,000.00				
	Vendor A Prototype Procurement #2	$90,950.00				
	Vendor B Prototype Procurement #2	$80,000.00				
	Vendor A Fabrication of Qty.100 Preproduction PMTs	$ 417,363.00				
	Vendor B Fabrication of Qty.100 Preproduction PMTs	$ 417,363.00				
	Total	$ 1,085,676.00	$0.00			

Production Procurement

The baseline quantity and model of production PMTs to be procured is 29,000 12" Hamamatsu R11780HQE.

The assumption for costing is that the contract will be fixed price with options. The Phase I Production order is the first 10,000 production PMTs of this contract. An order of at least this magnitude needs to be placed following CD-2/3A in order to meet the project schedule since the lead time is very long and no vendor currently has the capacity to produce large scientific PMTs at the rates required by LBNE. LBNE would require at least 7,000/yr. Any vendor will have to invest in a facility expansion, which is likely to take two years to complete following the commitment. An order smaller than 10,000 could be produced in existing facilities and would not motivate vendors to undertake the expansion needed for LBNE.

It is assumed that the vendors are willing to invest in the design of an expanded facility as part of the pre-qualification process that occurs prior to bidding. Having a design ready allows for construction to proceed shortly following release of the contract. It is also assumed that the vendor would begin making PMTs using their existing facilities until the expanded facilities are ready for use. We estimate that it will take one year (264 working days) to produce each of the first batch of 3,000 PMTs. Following the two year expansion, the vendor will begin producing PMTs at the new facilities.

Our estimate for production quantities based on production economies of scale is $1,904.00 each. This estimate assumes that we will be charged duty for the PMTs. It is possible for LBNE to receive an exemption from duty, but for this the Buy American Act requires that there be no viable US vendor. The duty charge would be 3.3%, based on Harmonized Tariff Code 8540.20.4000. The cost of a delivered PMT is $2,027.12 as detailed below.

Production PMT
Unit Cost

PMT	$1,904.00		
Duty	$62.83	3.3% per Harmonized Tarriff Code 8540.20.4000	
Air+Rail Ship	$50.00		
Ground Ship	$5.29		
Customs Clearance	$5.00	Estimate	
TOTAL/unit	$2,027.12		

There is $15k included for the procurement consultant to assist in developing the Request for Proposals.

It is assumed that the procurement is based at Fermilab, where an overhead of 14.4% (in FY10) is charged on the first $500k of any purchase order. No overhead is charged on the increment of the order above $500k. It is assumed that the overhead will be charged as each of four options is released.

Labor Details

This estimate assumes that Fermilab Department labor is included in lab overhead and not charged to the project, as is typical. Also, the L3 PMT Manager, Deputy Manager, Project Engineer, QA, ES&H and Admin will be involved in the procurement process together with the procurement consultant listed in the M&S discussion above.

PMT Production Procurement Estimate

Task ID	Task Name	**EDIA M&S** (FY2010$ direct cost, without overhead or escalation)	**MFG M&S** (FY2010$ direct cost, without overhead or escalation)	Labor Resource Function and Titles (Titles from Master Resource List)	**EDIA Labor** % effort for duration or number of hours for each labor type respectively	**MFG Labor** % effort for duration or number of hours for each labor type respectively
	Prepare PMT Production Phase I RFP	$15,000.00		FNAL Elec Eng	80 hrs	
				FNAL Scientist	80 hrs	
				FNAL QA Eng	80 hrs	
	Evaluate Proposals and Prepare Production Phase I PMT Purchase Order	$15,000.00		FNAL Elec Eng	120 hrs	
				FNAL Scientist	120 hrs	
				FNAL QA Eng	120 hrs	
	Vendor Production Run #1 - 3,000 PMTs		$6,081,360.00			
	Vendor Production Run #2 - 6,000 PMTs		$12,162,720.00			
	Vendor Production Run #3 - 6,000 PMTs		$12,162,720.00			
	Vendor Production Run #4 - 7,000 PMTs		$14,189,840.00			
	Vendor Production Run #5 - 7,000 PMTs		$14,189,840.00			
	Total	$ 15,000.00	$58,786,480.00			

Table1. Task Table

WBS/ID	Activity ID	Description	Duration Working Days	Resource Type	M&S FY2010 Total Cost	Hours
1.04.03.02.01	PD11750	Candidate PMT Evaluation	697	Labor		13,290
1.04.03.02.01	PD11750	Candidate PMT Evaluation	697	M&S	$15,000	
1.04.03.02.01	PD11760	Candidate PMT Performance Optimization	263	Labor		9,537
1.04.03.02.01	PD11760	Candidate PMT Performance Optimization	263	M&S	$25	
1.04.03.02.01	PD11770	Production PMT Characterization	527	Labor		12,323
1.04.03.02.01	PD11770	Production PMT Characterization	527	M&S	$102	
1.04.03.02.02	PD11800	Test glass sample coupons	121	Labor		100
1.04.03.02.02	PD11800	Test glass sample coupons	121	M&S	$23,000	
1.04.03.02.02	PD11810	Analyze slow pressure test results	60	Labor		100
1.04.03.02.02	PD11810	Analyze slow pressure test results	60	M&S	$100,000	
1.04.03.02.02	PD11830	Develop simulation model and procure software	89	M&S	$45,612	
1.04.03.02.02	PD11840	Perform PMT Implosion Simulation	20	Labor		160
1.04.03.02.02	PD11850	Setup and Perform PIU Implosion Simulation #1	30	Labor		500
1.04.03.02.02	PD11860	Setup and Perform PIU Implosion Simulation #2	30	Labor		500
1.04.03.02.02	PD11870	Setup and Perform PIU Implosion Simulation #3	30	Labor		500
1.04.03.02.02	PD11900	Upgrade BNL Pressure Vessel	21	Labor		435
1.04.03.02.02	PD11900	Upgrade BNL Pressure Vessel	21	M&S	$77,036	
1.04.03.02.02	PD11910	Procure mechanical sample and dummy PMTs for Test Series #1 (Q	61	M&S	$53,897	
1.04.03.02.02	PD11920	Perform Small Sample Test (Qty.4)	29	Labor		120
1.04.03.02.02	PD11940	Plan, Setup, and Perform Prototype Slow Pressure Test Series #	121	Labor		520
1.04.03.02.02	PD11940	Plan, Setup, and Perform Prototype Slow Pressure Test Series #	121	M&S	$4,587	
1.04.03.02.02	PD11950	Procure Mechanical Samples for Test Series #2	60	Labor		100
1.04.03.02.02	PD11950	Procure Mechanical Samples for Test Series #2	60	M&S	$54,300	
1.04.03.02.02	PD11960	Setup and Perform Prototype Test Series #2	91	Labor		1,140
1.04.03.02.02	PD11960	Setup and Perform Prototype Test Series #2	91	M&S	$24,464	
1.04.03.02.02	PD11970	Procure mechanical sample PMTs for Test Series #3 (Qty.200)	61	M&S	$271,500	
1.04.03.02.02	PD11980	Setup and Perform Prototype Test Series #3	91	Labor		1,940
1.04.03.02.02	PD12010	Production Year #1 Sample Testing	260	Labor		9,020
1.04.03.02.02	PD12010	Production Year #1 Sample Testing	260	M&S	$42,812	
1.04.03.02.02	PD12020	Production Year #2 Sample Testing	259	Labor		8,020
1.04.03.02.02	PD12020	Production Year #2 Sample Testing	259	M&S	$51,222	
1.04.03.02.02	PD12030	Production Year #3 Sample Testing	259	Labor		8,020
1.04.03.02.02	PD12030	Production Year #3 Sample Testing	259	M&S	$67,747	
1.04.03.02.02	PD12040	Production Year #4 Sample Testing	260	Labor		8,020
1.04.03.02.02	PD12040	Production Year #4 Sample Testing	260	M&S	$67,747	
1.04.03.02.02	PD12050	Production Year #5 Sample Testing	260	Labor		8,020
1.04.03.02.02	PD12050	Production Year #5 Sample Testing	260	M&S	$67,747	
1.04.03.02.02	PD12070	CRADA preparation for NAVSEA facility recommissioning and Test	80	M&S	$451,776	
1.04.03.02.02	PD12080	NAVSEA facility recommission	119	M&S	$6,368	
1.04.03.02.02	PD12090	Setup and Perform Test #1	50	Labor		805
1.04.03.02.02	PD12090	Setup and Perform Test #1	50	M&S	$7,721	
1.04.03.02.02	PD12100	Setup and Perform Test #2	50	Labor		770
1.04.03.02.02	PD12100	Setup and Perform Test #2	50	M&S	$75,939	
1.04.03.02.02	PD12110	Setup and Perform Test #3	60	Labor		730

1.04.03.02.02	PD12110	Setup and Perform Test #3	60	M&S	$128,553	
1.04.03.02.02	PD12120	Setup and Perform Test #4	60	Labor		750
1.04.03.02.02	PD12120	Setup and Perform Test #4	60	M&S	$128,553	
1.04.03.02.02	PD12130	Setup and Perform Test #5	60	Labor		1,510
1.04.03.02.02	PD12130	Setup and Perform Test #5	60	M&S	$125,495	
1.04.03.02.03	PD12150	Develop Acquisition Plan Document	262	Labor		260
1.04.03.02.03	PD12150	Develop Acquisition Plan Document	262	M&S	$13,728	
1.04.03.02.03	PD12160	Prequalify Vendor A	60	Labor		280
1.04.03.02.03	PD12160	Prequalify Vendor A	60	M&S	$11,440	
1.04.03.02.03	PD12170	Prequalify Vendor B	60	Labor		280
1.04.03.02.03	PD12170	Prequalify Vendor B	60	M&S	$11,440	
1.04.03.02.03	PD12180	Review production RFP/Q	20	Labor		160
1.04.03.02.03	PD12180	Review production RFP/Q	20	M&S	$11,440	
1.04.03.02.03	PD12190	Review production bids and select source	40	Labor		340
1.04.03.02.03	PD12190	Review production bids and select source	40	M&S	$22,880	
1.04.03.02.04	PD12220	Vendor A Prototype Procurement #1	89	M&S	$50,878	
1.04.03.02.04	PD12230	Vendor B Prototype Procurement #1	178	M&S	$91,520	
1.04.03.02.04	PD12240	Vendor A Prototype Procurement #2	179	M&S	$91,147	
1.04.03.02.04	PD12250	Vendor B Prototype Procurement #2	180	M&S	$91,520	
1.04.03.02.04	PD12270	Prepare Preproduction Order Vendor A	31	Labor		108
1.04.03.02.04	PD12280	Prepare Preproduction Order Vendor B	30	Labor		108
1.04.03.02.04	PD12310	Vendor A Fabrication of Qty.100 Preproduction PMTs	181	M&S	$399,485	
1.04.03.02.04	PD12320	Vendor B Fabrication of Qty. 100 Preproduction PMTs	178	M&S	$399,485	
1.04.03.02.04	PD12370	Prepare PMT Production Phase I RFP	60	Labor		380
1.04.03.02.04	PD12370	Prepare PMT Production Phase I RFP	60	M&S	$17,160	
1.04.03.02.04	PD12390	Vendor Proposal Submittal Period - Production Phase I PMTs	44	Labor		100
1.04.03.02.04	PD12400	Evaluate Proposals and Prepare Production Phase I PMT Purchase	60	Labor		476
1.04.03.02.04	PD12420	Vendor Production Run #1 - 3,000 PMTs	264	M&S	$6,154,620	
1.04.03.02.04	PD12430	Vendor Production Run #2 - 6,000 PMTs	262	M&S	$12,216,240	
1.04.03.02.04	PD12440	Vendor Production Run #3 - 6,000 PMTs	263	Labor		100
1.04.03.02.04	PD12440	Vendor Production Run #3 - 6,000 PMTs	263	M&S	$12,223,240	
1.04.03.02.04	PD12450	Vendor Production Run #4 - 7,000 PMTs	264	Labor		100
1.04.03.02.04	PD12450	Vendor Production Run #4 - 7,000 PMTs	264	M&S	$14,426,780	
1.04.03.02.04	PD12460	Vendor Production Run #5 - 7,000 PMTs	220	Labor		100
1.04.03.02.04	PD12460	Vendor Production Run #5 - 7,000 PMTs	220	M&S	$14,426,780	
		Total			**$62,218,986**	**89,722**

Assumptions/Interfaces
As part of the pre-qualification process, vendor(s) will undertake facility expansion planning, which can take 1-2 years

The contract will be structured as an order for Qty. 9,000 with options for the remaining production PMTs.

Only the first $500k of the entire production order is charged with overhead at FNAL. The FY2010 burden rate on M&S is 14.4%.

This estimate assumes that we will be charged duty for the PMTs. It is possible for LBNE to receive an exemption from duty, but the Buy American Act requires that there is no viable US vendor.

FNAL procurement personnel are not charged to the project.

Constraints
The exchange rate used in this estimate is 90Y/$. This can, of course, vary widely.

Reaching production rates will almost certainly require an early funding infusion for a large order. Delaying an initial large order will prolong the production. Also, the rate of PA integration and testing system performed by the project is being designed to keep pace with PMT production. If the initial large order was abandoned in an attempt to 'backload' the PMT production, then the PA integration and testing would likely be slower to react.

Contingency
The following methodology from the project office was used for selecting contingency percentages:
M&S Contingency Rules

1. 10% - Items that have been purchased on a previous project for which there is more than one potential vendor.
2. 20% - Items that have been purchased on a previous project but for which there is likely to be only one vendor.
3. 40% - Items that have analogous comparisons to components from other projects but may require additional design considerations.
4. 60% - Items that are similar to components previously designed but, because of an increase in complexity or other considerations, require a significant design time and perhaps prototyping.
5. 80% - 100% - Items that require new design with very little similarity to previously designed components. Significant prototyping.

Labor Contingency Rules

1. 20% - Work that has been done before for which a good estimate exists.
2. 40% - Work that has been done before but contains some minor uncertainty because of minor changes.
3. 60% - Work for which previous experience applies but because of increased complexity or uncertainty may require additional manpower.
4. 80% - Work that represents a scope with minor previous experience. Requires some prototyping.

5. 100% - Work that has never been done before and which requires significant prototyping.

Based on these rules the following contingencies were used:

WBS#	WBS Description	M&S Contingency	Labor Contingency	Comments
1.4.3.2.1	PMT Optical/Electronic Characterization	20%	20%	Similar measurements have been performed on several projects.
1.4.3.2.2	PMT Mechanical Characterization	60%	60%	Testing and simulations programs are unique.
1.4.3.2.3	PMT Selection	40%	40%	Procurement process has a typical format but for a much larger than typical scale.
1.4.3.2.4	PMT Procurement	20%	40%	Budgetary quote exists.

130.04.03.02 PMT

WBS LEVEL 5	ACTIVITY ID	ACTIVITY DESCRIPTION	START DATE	FINISH DATE	DURATION	RESOURCE	HOURS	COST	TOTAL with Escalation
130.04.03.02.01 PMT Optical/El	PD11750	Candidate PMT Evaluation	1/11/2010	9/11/2012	669	BNL M&S CE Costs		14,999	15,141
						BNL M&S CE from CD: General Labor	375	6,030	6,159
						BNL M&S CE from CD: Post Doc	502	21,282	21,736
						BNL M&S CE from CD: Uncosted Grad Student	1,753		
						BNL M&S CE from DR: General Labor	1,378	23,855	24,364
						BNL M&S CE from PN: Electronics Technician	241	9,957	10,170
						BNL M&S CE from PN: General Labor	4,148	100,544	102,688
						BNL M&S CE from PN: Post Doc	997	52,362	53,479
						BNL M&S CE from PN: Uncosted Post Doc	2,000		
						BNL M&S CE from PN: Undergrad	1,499	28,634	29,245
						BNL M&S CE from DR: Non Sr. Physicist/Scientist	401	29,517	30,146
		Candidate PMT Evaluation Total					13,293	287,182	293,126
	PD11760	Candidate PMT Performance Optimizat	9/12/2012	9/13/2013	251	BNL M&S CE from DR: General Labor	2,000	34,627	35,909
						BNL M&S CE from PN: Electronics Technician	562	23,245	24,106
						BNL M&S CE from PN: Post Doc	399	20,964	21,740
						BNL M&S CE from PN: Uncosted Post Doc	625		
						BNL M&S CE from PN: Undergrad	4,001	76,450	79,279
						BNL M&S CE from UN: General Labor	100	2,172	2,252
						BNL M&S CE from UW: Mechanical Technician	499	34,100	35,362
						BNL M&S CE from UW: Physicist/Scientist	349	30,326	31,448
						BNL M&S CE from UW: Post Doc	999	56,063	58,138
						BNL M&S CE Supplies		25	26
		Candidate PMT Performance Optimization Total					9,535	277,972	288,260
	PD11770	Production PMT Characterization	12/31/2014	1/25/2017	528	BNL M&S CE Costs		106	120
						BNL M&S CE from CD: General Labor	876	14,107	15,768
						BNL M&S CE from CD: Post Doc	2,001	84,879	94,869
						BNL M&S CE from CD: Uncosted Grad Student	1,748		
						BNL M&S CE from CS: Grad Student	2,550	48,974	54,738
						BNL M&S CE from CS: Mechanical Technician	2,550	102,010	114,015
						BNL M&S CE from CS: Post Doc	1,051	49,957	55,837
						BNL M&S CE from MA: Post Doc	301	16,645	18,603
						BNL M&S CE from UW: General Labor	301	12,065	13,485
						BNL M&S CE from CS: Non Sr. Physicist/Scientist	950	58,950	65,888
		Production PMT Characterization Total					12,329	387,693	433,323
130.04.03.02.01 PMT Optical/Electronic Characterization Total							**35,157**	**952,847**	**1,014,709**
130.04.03.02.02 PMT Mechanica	PD11800	Test glass sample coupons	2/3/2011	7/22/2011	118	BNL M&S CE Costs		23,001	23,001
						BNL M&S CE from UN: General Labor	100	2,169	2,228
		Test glass sample coupons Total					100	25,170	25,229
	PD11810	Analyze slow pressure test results	7/25/2011	10/13/2011	57	BNL M&S CE Costs		100,000	100,332
						BNL M&S CE from UN: General Labor	100	2,158	2,217

130.04.03.02.02 PMT Mechanica	PD11810	Analyze slow pressure test results Total					100	102,158	102,549
	PD11830	Develop simulation model and procure	7/1/2010	11/5/2010	90	BNL M&S CS Laboratory Equipment		42,000	45,612
		Develop simulation model and procure software Total						42,000	45,612
	PD11840	Perform PMT Implosion Simulation	11/8/2010	12/2/2010	16	Mechanical Engineer P5	160	15,640	26,198
		Perform PMT Implosion Simulation Total					160	15,640	26,198
	PD11850	Setup and Perform PIU Implosion Simu	5/26/2011	7/7/2011	28	Mechanical Designer P2	240	13,891	23,267
						Mechanical Engineer P5	260	25,427	42,591
		Setup and Perform PIU Implosion Simulation #1 Total					500	39,317	65,858
	PD11860	Setup and Perform PIU Implosion Simu	11/8/2012	12/20/2012	28	BNL M&S CE from UN: General Labor	240	5,190	5,384
						Mechanical Engineer P5	260	25,427	34,947
		Setup and Perform PIU Implosion Simulation #2 Total					500	30,617	40,331
	PD11870	Setup and Perform PIU Implosion Simu	5/8/2014	6/17/2014	28	BNL M&S CE from UN: General Labor	240	5,190	5,529
						Mechanical Engineer P5	260	25,427	35,890
		Setup and Perform PIU Implosion Simulation #3 Total					500	30,617	41,420
	PD11900	Upgrade BNL Pressure Vessel	10/4/2010	10/26/2010	17	BNL M&S CS PO Purchases		50,383	58,898
						Mechanical Engineer P2	40	2,313	3,874
						Mechanical Engineer P5	130	12,712	21,294
						Mechanical Technician T2	265	15,468	25,910
		Upgrade BNL Pressure Vessel Total					435	80,876	109,975
	PD11910	Procure mechanical sample and dummy	10/4/2010	12/31/2010	60	BNL M&S CS PO Purchases		35,250	41,207
		Procure mechanical sample and dummy PMTs for Test Total						35,250	41,207
	PD11920	Perform Small Sample Test (Qty.4)	1/3/2011	2/2/2011	22	Mechanical Engineer P5	40	3,914	6,556
						Mechanical Technician T2	80	4,675	7,831
		Perform Small Sample Test (Qty.4) Total					120	8,589	14,387
	PD11940	Plan, Setup, and Perform Prototype Slo	2/3/2011	7/15/2011	113	BNL M&S CS PO Purchases		3,000	3,508
						Mechanical Engineer P5	260	25,405	42,555
						Mechanical Technician T2	260	15,173	25,415
		Plan, Setup, and Perform Prototype Slow Pressure Total					520	43,579	71,478
	PD11950	Procure Mechanical Samples for Test Se	7/18/2011	10/5/2011	57	BNL M&S CE from UN: General Labor	100	2,158	2,216
						BNL M&S CS Laboratory Equipment		50,000	54,351
		Procure Mechanical Samples for Test Series #2 Total					100	52,157	56,567
	PD11960	Setup and Perform Prototype Test Serie	10/14/2011	2/15/2012	83	BNL M&S CE from UN: General Labor	100	2,164	2,233
						BNL M&S CS PO Purchases		16,000	19,209
						Mechanical Engineer P5	260	25,394	42,748
						Mechanical Technician T2	780	45,548	76,674

PD11960	Setup and Perform Prototype Test Series #2 Total					1,140	89,106	140,864
PD11970	Procure mechanical sample PMTs for T	2/16/2012	5/10/2012	60	BNL M&S CS Laboratory Equipment		250,000	278,831
	Procure mechanical sample PMTs for Test Series #3 Total						250,000	278,831
PD11980	Setup and Perform Prototype Test Serie	5/11/2012	9/6/2012	81	BNL M&S CE from UN: General Labor	100	2,163	2,232
					Mechanical Engineer P2	400	23,163	34,864
					Mechanical Engineer P5	400	39,114	58,873
					Mechanical Technician T2	1,040	60,715	91,491
	Setup and Perform Prototype Test Series #3 Total					1,940	125,155	187,460
PD12010	Production Year #1 Sample Testing	12/31/2014	1/12/2016	257	BNL M&S CS PO Purchases		28,001	36,666
					Mechanical Engineer P2	1,000	57,871	84,485
					Mechanical Technician T2	1,779	103,870	151,625
					Uncosted Grad Student	6,240		
	Production Year #1 Sample Testing Total					9,019	189,742	272,776
PD12020	Production Year #2 Sample Testing	1/13/2016	1/5/2017	257	BNL M&S CS PO Purchases		15,501	20,847
					BNL M&S CS Travel		17,999	31,656
					Mechanical Technician T2	1,781	103,975	155,900
					Uncosted Grad Student	6,240		
	Production Year #2 Sample Testing Total					8,021	137,476	208,402
PD12030	Production Year #3 Sample Testing	1/6/2017	1/1/2018	257	BNL M&S CS Laboratory Equipment		30,001	38,482
					BNL M&S CS PO Purchases		5,000	6,903
					BNL M&S CS Travel		17,999	32,499
					Mechanical Technician T2	1,781	103,975	160,057
					Uncosted Grad Student	6,240		
	Production Year #3 Sample Testing Total					8,021	156,975	237,941
PD12040	Production Year #4 Sample Testing	1/2/2018	12/26/2018	257	BNL M&S CS Laboratory Equipment		30,001	39,509
					BNL M&S CS PO Purchases		5,000	7,087
					BNL M&S CS Travel		17,999	33,367
					Mechanical Technician T2	1,781	103,975	164,332
					Uncosted Grad Student	6,240		
	Production Year #4 Sample Testing Total					8,021	156,975	244,295
PD12050	Production Year #5 Sample Testing	12/27/2018	12/20/2019	257	BNL M&S CS Laboratory Equipment		30,001	40,558
					BNL M&S CS PO Purchases		5,000	7,276
					BNL M&S CS Travel		17,999	34,252
					Mechanical Technician T2	1,781	103,975	168,700
					Uncosted Grad Student	6,240		
	Production Year #5 Sample Testing Total					8,021	156,975	250,785
PD12070	CRADA preparation for NAVSEA facility	1/11/2010	5/4/2010	80	BNL M&S CS Laboratory Equipment		416,000	451,776
	CRADA preparation for NAVSEA facility recommissio Total						416,000	451,776
PD12080	NAVSEA facility recommission	5/5/2010	10/22/2010	120	BNL M&S CS Travel		4,165	6,367

	PD12080	NAVSEA facility recommission Total						4,165	6,367
	PD12090	Setup and Perform Test #1	10/25/2010	1/5/2011	48	BNL M&S CE from UN: General Labor	100	2,165	2,224
						BNL M&S CS Travel		5,050	7,720
						Mechanical Designer P2	100	5,779	9,681
						Mechanical Engineer P2	130	7,536	12,624
						Mechanical Engineer P5	170	16,610	27,822
						Mechanical Technician T2	305	17,808	29,828
		Setup and Perform Test #1 Total					805	54,949	89,899
	PD12100	Setup and Perform Test #2	7/21/2011	9/27/2011	48	BNL M&S CE from UN: General Labor	100	2,165	2,224
						BNL M&S CS Laboratory Equipment		60,000	65,160
						BNL M&S CS PO Purchases		2,000	2,338
						BNL M&S CS Travel		5,050	7,720
						Mechanical Designer P2	260	15,060	25,226
						Mechanical Engineer P2	140	8,108	13,581
						Mechanical Engineer P5	140	13,701	22,949
						Mechanical Technician T2	130	7,600	12,731
		Setup and Perform Test #2 Total					771	113,684	151,929
	PD12110	Setup and Perform Test #3	12/7/2011	3/1/2012	58	BNL M&S CE from UN: General Labor	100	2,158	2,227
						BNL M&S CS Laboratory Equipment		100,000	111,532
						BNL M&S CS PO Purchases		8,000	9,604
						BNL M&S CS Travel		5,050	7,929
						Mechanical Designer P2	260	15,041	25,320
						Mechanical Engineer P2	120	6,962	11,720
						Mechanical Engineer P5	120	11,736	19,756
						Mechanical Technician T2	130	7,587	12,772
		Setup and Perform Test #3 Total					730	156,534	200,859
	PD12120	Setup and Perform Test #4	3/1/2013	5/21/2013	58	BNL M&S CE from UN: General Labor	100	2,158	2,238
						BNL M&S CS Laboratory Equipment		100,000	114,541
						BNL M&S CS PO Purchases		8,000	9,863
						BNL M&S CS Travel		5,050	8,143
						Mechanical Designer P2	260	15,041	20,673
						Mechanical Engineer P2	130	7,523	10,340
						Mechanical Engineer P5	130	12,700	17,455
						Mechanical Technician T2	130	7,587	10,428
		Setup and Perform Test #4 Total					749	158,059	193,680
	PD12130	Setup and Perform Test #5	5/8/2014	7/31/2014	58	BNL M&S CE from UN: General Labor	100	2,158	2,298
						BNL M&S CS Laboratory Equipment		100,000	117,636
						BNL M&S CS PO Purchases		6,000	7,597
						BNL M&S CS Travel		5,050	8,363
						Mechanical Designer P2	260	15,041	21,231
						Mechanical Engineer P2	130	7,523	10,619
						Mechanical Engineer P5	130	12,700	17,926
						Mechanical Technician T2	890	51,945	73,321
		Setup and Perform Test #5 Total					1,509	200,417	258,991
130.04.03.02.02 PMT Mechanical Characterization Total							**51,782**	**2,872,183**	**3,815,666**

130.04.03.02.03 PMT Selection	PD12150	Develop Acquisition Plan Document	1/11/2010	1/28/2011	264	Accelerator Physicist Experimental	79	4,033	11,657
						BNL M&S CE from UN: General Labor	100	2,170	2,187
						FNAL M&S CE Costs		12,001	12,001
						Non-Sr. Electrical Design Engineer	79	3,701	10,698
		Develop Acquisition Plan Document Total					258	21,904	36,543
	PD12160	Prequalify Vendor A	7/31/2012	10/24/2012	60	Accelerator Physicist Experimental	60	3,067	9,388
						BNL M&S CE from UN: General Labor	100	2,167	2,240
						FNAL M&S CE Costs		10,000	10,347
						General ES&H	60	2,977	9,112
						Non-Sr. Electrical Design Engineer	60	2,815	8,616
		Prequalify Vendor A Total					280	21,025	39,702
	PD12170	Prequalify Vendor B	5/29/2013	8/15/2013	55	Accelerator Physicist Experimental	60	3,064	9,412
						BNL M&S CE from UN: General Labor	100	2,165	2,246
						FNAL M&S CE Costs		10,000	10,547
						General ES&H	60	2,974	9,136
						Non-Sr. Electrical Design Engineer	60	2,812	8,639
		Prequalify Vendor B Total					280	21,014	39,980
	PD12180	Review production RFP/Q	11/12/2013	12/2/2013	13	Accelerator Physicist Experimental	20	1,024	3,232
						BNL M&S CE from UN: General Labor	100	2,162	2,304
						FNAL M&S CE Costs		10,000	10,832
						General ES&H	20	994	3,137
						Non-Sr. Electrical Design Engineer	20	940	2,966
		Review production RFP/Q Total					160	15,121	22,470
	PD12190	Review production bids and select sour	2/7/2014	3/28/2014	35	Accelerator Physicist Experimental	80	4,084	12,885
						BNL M&S CE from UN: General Labor	100	2,165	2,307
						FNAL M&S CE Costs		20,000	21,664
						General ES&H	80	3,964	12,507
						Non-Sr. Electrical Design Engineer	80	3,748	11,826
		Review production bids and select source Total					340	33,961	61,189
130.04.03.02.03 PMT Selection Total							**1,318**	**113,025**	**199,884**
130.04.03.02.04 PMT Procurem	PD12220	Vendor A Prototype Procurement #1	10/4/2010	2/2/2011	82	FNAL M&S CE Costs		44,474	44,474
		Vendor A Prototype Procurement #1 Total						44,474	44,474
	PD12230	Vendor B Prototype Procurement #1	3/28/2011	11/30/2011	170	FNAL M&S CE Costs		80,000	80,483
		Vendor B Prototype Procurement #1 Total						80,000	80,483
	PD12240	Vendor A Prototype Procurement #2	2/3/2011	10/11/2011	173	FNAL M&S CE Costs		91,121	91,192
		Vendor A Prototype Procurement #2 Total						91,121	91,192
	PD12250	Vendor B Prototype Procurement #2	12/1/2011	8/8/2012	173	FNAL M&S CE Costs		80,000	82,160
		Vendor B Prototype Procurement #2 Total						80,000	82,160

	PD12270	Prepare Preproduction Order Vendor A	10/12/2011	11/23/2011	30	Administrative Support	4	100	311
						BNL M&S CE from UN: General Labor	100	2,161	2,230
						Non-Sr. Electrical Design Engineer	4	190	582
		Prepare Preproduction Order Vendor A Total					108	2,451	3,123
	PD12280	Prepare Preproduction Order Vendor B	8/9/2012	9/20/2012	30	Administrative Support	4	100	311
						BNL M&S CE from UN: General Labor	100	2,161	2,230
						Non-Sr. Electrical Design Engineer	4	190	582
		Prepare Preproduction Order Vendor B Total					108	2,451	3,123
	PD12310	Vendor A Fabrication of Qty.100 Prepro	11/28/2011	7/31/2012	170	FNAL M&S CE Costs		349,199	358,628
		Vendor A Fabrication of Qty.100 Preproduction PMT Total						349,199	358,628
	PD12320	Vendor B Fabrication of Qty. 100 Prepr	9/21/2012	5/28/2013	169	FNAL M&S CE Costs		349,200	367,900
		Vendor B Fabrication of Qty. 100 Preproduction PM Total						349,200	367,900
	PD12370	Prepare PMT Production Phase I RFP	8/16/2013	11/8/2013	60	Accelerator Physicist Experimental	80	4,101	12,756
						Administrative Support	40	989	3,122
						BNL M&S CE from UN: General Labor	100	2,167	2,276
						FNAL M&S CE Costs		15,000	16,016
						General ES&H	80	3,981	12,381
						Non-Sr. Electrical Design Engineer	80	3,764	11,707
		Prepare PMT Production Phase I RFP Total					381	30,002	58,259
	PD12390	Vendor Proposal Submittal Period -Proc	12/3/2013	2/6/2014	44	BNL M&S CE from UN: General Labor	100	2,160	2,301
		Vendor Proposal Submittal Period -Production Phas Total					100	2,160	2,301
	PD12400	Evaluate Proposals and Prepare Produc	2/7/2014	5/2/2014	60	Accelerator Physicist Experimental	120	6,121	19,315
						Administrative Support	16	393	1,258
						BNL M&S CE from UN: General Labor	100	2,167	2,309
						General ES&H	120	5,942	18,748
						Non-Sr. Electrical Design Engineer	120	5,618	17,727
		Evaluate Proposals and Prepare Production Phase I Total					475	20,241	59,356
	PD12420	Vendor Production Run #1 - 3,000 PMT	12/31/2014	1/21/2016	264	FNAL M&S CE Costs		6,082,621	6,817,457
		Vendor Production Run #1 - 3,000 PMTs Total						6,082,621	6,817,457
	PD12425	Vendor Production Run #5 - 7,000 PMT	2/5/2019	12/9/2019	220	BNL M&S CE from UN: General Labor	99	2,141	2,622
						FNAL M&S CE Costs		14,192,781	17,667,728
		Vendor Production Run #5 - 7,000 PMTs Total					99	14,194,922	17,670,350
	PD12430	Vendor Production Run #2 - 6,000 PMT	1/22/2016	1/24/2017	263	FNAL M&S CE Costs		12,165,241	14,012,970
		Vendor Production Run #2 - 6,000 PMTs Total						12,165,241	14,012,970
	PD12440	Vendor Production Run #3 - 6,000 PMT	1/25/2017	1/29/2018	264	BNL M&S CE from UN: General Labor	100	2,170	2,526
						FNAL M&S CE Costs		12,165,239	14,396,422

	PD12440	Vendor Production Run #3 - 6,000 PMTs Total					100	12,167,409	14,398,948
	PD12443	Vendor Support for Production Run #4	1/31/2018	2/4/2019	264	BNL M&S CE from UN: General Labor	100	2,170	2,595
		Vendor Support for Production Run #4 - 7,000 PMT Total					100	2,170	2,595
	PD12450	Vendor Production Run #4 - 7,000 PMT	1/31/2018	2/4/2019	264	BNL M&S CE from UN: General Labor	100	2,170	2,595
						FNAL M&S CE Costs		14,192,780	17,258,130
		Vendor Production Run #4 - 7,000 PMTs Total					100	14,194,950	17,260,725
130.04.03.02.04 PMT Procurement Total							**1,572**	**59,858,614**	**71,314,045**
Grand Total							**89,830**	**63,796,669**	**76,344,304**

	LBNE Water Cherenkov Detector **BASIS of ESTIMATE FORM (BoE)**	**Date of Estimate: 18-Nov-2011** **Revision #: 1** **Prepared By: M. Kaducak** **Approved By:** **Level 2 Manager**

WBS Number: **130.04.03.03**	**WBS Title:** **Base**

WBS Dictionary:

Includes origination of engineering requirements, design to meet those requirements, build prototype(s) and procurement and delivery to the PA integration site(s) of all bases required for the project.

Cost Type **(check all that apply):** ___ EDIA Material __x_ EDIA Labor __x_ MFG Material _x__ MFG Labor	**Costing Method** **(check all that apply):** __x_ Engineering Judgment ___Physicist Estimate ___ Level of Effort _x__ Vendor Quote (attached) ___ Catalog Price (specify) ___ Prior purchase _x__ Prior experience ___ Parametric Estimate ___ Other- Description:_____

Attach Relevant Documents (including but not limited to):

M&S Contingency (%)**: 40% for encapsulation, 10% for electronics**	**Labor Contingency** (%)**: 20%**

Basis of Estimate
The PMT base WBS 1.4.3.3 includes 1) design, prototyping, production and installation of a base encapsulation system and 2) procurement of the production base circuit boards. The design and prototyping of the base circuit boards is the responsibility of WBS 1.4.4 Electronics/Readout. Design labor hours and prototyping M&S for the encapsulation process are estimates from the responsible design engineer. Estimates for the base encapsulation materials are based on the SNO experiment, which provides a basis for the LBNE design. The material cost breakdown is in a table below and totals $55/base for encapsulation materials. The labor estimates are based on IceCube, where one technician could perform a more complex process at the rate of one unit/hour. We assume half the required labor, or 30 minutes per unit. Soldering the base onto the PMT is accounted for in WBS 1.4.3.7 (PA Integration and Testing). The design development for base encapsulation is assumed to have two prototyping iterations followed by a preproduction run of quantity ~200 units. Estimates for the base electronics in production quantities are taken from the average of attached quotations from two vendors, which is $30/base. Prices for lower quantities such as Qty.200 for preproduction is assumed to be 2x the production price, or $60/ea. <u>Cost of production Base Electronics</u> PCB $1.25 Components $9.97 Vendor Option #1 - Altron: Labor, Conformal Coating, Burnin, Function and HiPot test $13.95 Vendor Option #2 - Millenium: Labor, ESS, Conformal Coating, HiPot Test $22.77 So the cost per base would be $25-34 depending on which assembly house is used.

Base Estimate

Task ID	Task Name	Duration (working days)	**EDIA M&S** (FY2010$ direct cost, without overhead or escalation)	**MFG M&S** (FY2010$ direct cost, without overhead or escalation)	Labor Resource Function and Titles (Titles from Master Resource List)	**EDIA Labor** % effort for duration or number of hours for each labor type respectively	**MFG Labor** % effort for duration or number of hours for each labor type respectively
	Base Encapsulation Prototype V1 Design				Sr Mech Eng	125 hrs	
					Mech Eng	125 hrs	
	Travel for Prototype V1 Design		$ 5,000.00				
	Base Encapsulation Prototype V1 Production		$ 15,000.00		Sr Mech Eng	125 hrs	
					Mech Eng	125 hrs	
					Mech Tech	1590 hrs	
	Base Encapsulation Prototype V2 Design				Mech Eng	125 hrs	
	Base Encapsulation Prototype V2 Production		$ 15,000.00		Mech Eng	125 hrs	
					Mech Tech	520 hrs	
	Base Encapsulation Preliminary Design				Mech Eng	125 hrs	
	Base Encapsulation Preproduction Run		$ 25,000.00		Sr Mech Eng	200 hrs	
					Mech Eng	200 hrs	
					Mech Tech	1040 hrs	
	Base Encapsulation Final Design		$ 25,000.00		Mech Eng	125 hrs	
					General Labor	960 hrs	
	Base Encapsulation Production Run#1 (Qty. 5k)		$ 275,000.00		General Labor	2,500 hrs	
	Base Encapsulation Production Run#2 (Qty. 8k)		$ 440,000.00		General Labor	4,000 hrs	
	Base Encapsulation Production Run#3 (Qty. 8k)		$ 440,000.00		General Labor	4,000 hrs	
	Base Encapsulation Production Run#4 (Qty. 8k)		$ 440,000.00		General Labor	4,000 hrs	
	Base Electronics Preproduction (Qty. 200)			$ 13,000.00	Sr Elec Eng	40 hrs	
	Base Electronics Production Procurement #1 (Qty. 10k)			$ 300,000.00	Sr Elec Eng	80 hrs	
	Base Electronics Production Procurement#2 (Qty. 10k)			$ 300,000.00	Sr Elec Eng	80 hrs	
	Base Electronics Production Procurement#3 (Qty. 10k)			$ 300,000.00	Sr Elec Eng	80 hrs	
	Total		$ 1,680,000.00	$ 913,000.00			

Cost Breakdown of Encapsulation Materials and Labor per Base								
	Hours	Cost ($)						
Man Hrs Mfg	0.5		Estimate based on Ice Cube labor					
Shrink Tubing		$4.00	Estimate based on previous quote From Vendor for 10" PMT					
End Cap		$5.00	Estimate based on previous quote From Vendor for 10" PMT					
Plastic Shell		$5.00	Estimate based on previous quote From Vendor for 10" PMT					
Potting Compound		$35.00	Estimate based on previous quote From Vendor for 10" PMT					
Cleaning Supplies		$6.00	Estimate					
Total		**$55.00**						

Assumptions/Interfaces

1) The PMTs will be supplied by the vendor with flying leads.
2) The base electronics will be procured, comprehensively tested at the supplier and shipped to the PA assembly facility for encapsulation and integration.
3) The design and prototyping of the base circuit boards is the responsibility of WBS 1.4.4 Electronics/Readout.
4) Soldering the circuit board is accounted for in WBS 1.4.3.7 PMT Integration and Testing.

Comments

1) The original reference design called for the base to be built, attached to the PMT and encapsulated by the PMT vendor. Reluctance on the part of the PMT vendor to quote a firm price and that, if quoted, was expected to be unreasonably high, led to the decision on 25 July 2010 to modify the reference design to separate the PMT procurement and the fabrication of the base.

Contingency

The following methodology from the project office was used for selecting contingency percentages:

M&S Contingency Rules

1. 10% - Items that have been purchased on a previous project for which there is more than one potential vendor.
2. 20% - Items that have been purchased on a previous project but for which there is likely to be only one vendor.
3. 40% - Items that have analogous comparisons to components from other projects but may require additional design considerations.
4. 60% - Items that are similar to components previously designed but, because of an increase in complexity or other considerations, require a significant design time and perhaps prototyping.
5. 80% - 100% - Items that require new design with very little similarity to previously designed components. Significant prototyping.

Labor Contingency Rules

1. 20% - Work that has been done before for which a good estimate exists.
2. 40% - Work that has been done before but contains some minor uncertainty because of minor changes.
3. 60% - Work for which previous experience applies but because of increased complexity or uncertainty may require additional manpower.
4. 80% - Work that represents a scope with minor previous experience. Requires some prototyping.
5. 100% - Work that has never been done before and which requires significant prototyping.

Based on these rules the following contingencies were used:

WBS#	WBS Description	M&S Contingency	Labor Contingency	Comments
1.4.3.3.1	Base Encapsulation Development	40%	20%	Similar design to SNO
1.4.3.3.2	Base Encapsulation Production	40%	20%	Final materials not selected yet. Process assumed to be similar to SNO.
1.4.3.3.3	Base Electronics Production	10%	20%	Two quotes exist for circuit boards.

Attachment A – Base Electronics Assembly Quote #1

Millennium Electronics, Inc.
Innovations In Technology ISO 9001:2000 Certified
300 Millennium Drive, Crystal Lake, IL 60012
TEL: (815) 479-9755 FAX: (815) 479-1153 www.MEI2000.net

Our Quotation # 005669-01

09/14/2010

Quotation Valid Thru : 10/14/2010

Terms : 1% 10, NET 30

To :
Fermilab
P.O. Box 500
Batavia IL
United States

Attention : Johnny Green

Thank you for providing us the opportunity to quote on the following:

Item	Part / Rev / Description / Details			Quantity Quoted	Unit Price
001	MEIASMTYBD **PMT Base *Labor Only*** **Assumes a panel array of 4** ****All NRE tooling & piece part pricing is budgetary pending final release of BOM & design files.** **(Price includes Hi Pot test)**	Rev NS	U/M EA	1,000.0000	22.77000
				500.0000	23.12000
				250.0000	23.83000
				50.0000	29.55000
002	MEISVCTBD **FLYING PROBE DEVLEOPMENT**	Rev NS	U/M EA	1.0000	5,000.00000
003	MEISVCTBD **ENVIORNMENTAL STRESS SCREENING**	Rev NS	U/M EA	1.0000	0.90000
004	MEINRE0004 **STENCIL (2 REQUIRED)**	Rev 000	U/M EA	2.0000	350.00000
005	MEINRE0005 **PROGRAMMIN/ENGINEERING DEVELOPMENT**	Rev 000	U/M EA	1.0000	400.00000
006	MEISVCTBD **CONFORMAL COATING (AS NEEDED)**	Rev NS	U/M EA	1.0000	5.25000

NOTE:
1. Assembly to be soldered in accordance with IPC-A-610E, Class II.
2. Quotation is for labor only and includes anti-static bubble wrap packaging.
3. Quotation assumes approved panelization of PCB, and tape/reel for discretes, passives, and small IC's. Please note if the customer supplies the parts in bulk form, (not tape and reel) there will be a 30% premium for hand placements.
4. Quotation is good for 30 days and will be finalized upon approval of Engineering drawing/prototype and part substitutions.
5. All test fixtures & procedures to be supplied by Fermilab (process, labor & prototype costs TBD).
6. Quotation accuracy is based on Customer supplied documentation at time of quote.
7. Programming cost based on centroid data supplied in accordance with MEIENG-QSF11 Rev.2. This document is available at www.MEI2000.net/MEIENG-QSF11R2.pdf
8. Please note: The need for stencils is based on PCB revision level. Any changes made to the PCB may result in the need for new stencils to

January 31, 2012

Attn: Johnny Green
Fermi Labs
PO Box 500
Batavia, IL 60510

Altron Inc. Quote #: Q10469-1
Change history: -1 to add Burn-In Pricing.

Altron Inc. is the Seller. Fermi Labs is the Buyer.

THIS IS A BUDGETARY QUOTATION ONLY until proper documentation is provided.

ASSEMBLY
LBNE Project
PMT Base Rev. -

PRICES EACH PER BUILD QUANTITIES OF:

	16		
Labor	**$27.30**		
Functional Test		**$ 7.50**	
Burn-In	**$ 5.00**		
C.C.	**$12.50**		
High Pot Test	**$ 5.00**		
Total		**$57.30/each**	

Annual Requirements		50,000	100,000
Build		25,000	50,000
Shipments	4,166	8,333	
Labor	**$ 3.95**	**$ 3.65**	
Functional Test		**$ 1.50**	**$ 1.50**
Burn-In	**$ 1.50**	**$ 1.50**	
C.C.	**$ 6.25**	**$ 6.25**	
High Pot Test	**$ .75**	**$ .75**	
Total		**$13.95/each**	**$13.65/each**

The following one time charge(s) would apply:

Solder Paste Stencil (1 @ $500.00)	**$ 500.00**
Auto Placement Programming Charge With Centroid	**$ 100.00**
Auto Placement Programming Charge Without Centroid	**$ 200.00**
Flying Probe Programming Charge	**$2,500.00**
Conformal Coat Programming Charge	**$ 225.00**

CONTRACTUAL INFORMATION:
J-Std-001D and IPC-A-610D Class 3 quality and workmanship standards will be met.

This quotation is based on the information that was supplied to the seller. Production lead time is **2-3** weeks. This lead time is based on receipt of all material, documentation, answers to all questions, and is based on production capacity.

If order cancellations, order reductions, engineering change orders, or any other acts by the Buyer cause the Seller to incur additional costs other than those quoted by the Seller, these costs will be passed on to the Buyer.

This pricing is based on the board blanks being 16 in a panel, and the Seller will depanelize the boards.

The Seller will need a one-to-one pads only, positive artwork to produce a stencil.

The Seller will need 3 proper fiducial marks per panel on both sides of the panel. This quote is based on a centroid list being supplied. If the Buyer needs assistance, please feel free to call.

C of C required for the product.

Pricing is based on the boards being designed for automatic assembly and the components being packaged for automatic assembly. Partial reels must have twelve inches of leader.

PLEASE READ THE FOLLOWING TERMS AND CONDITIONS WHICH APPLY TO THE ABOVE PRICES:

1. The Buyer is to supply all of the material. The Seller is to supply the labor and the Anti-Static/Conductive Bags.
2. The Seller is to provide labor, 100% component, solder, visual inspection, Functional Test and Burn-In Test.
3. The Seller will make shipments by UPS or Federal Express with Delivery charges FOB the Seller's dock.
4. All Buyers' materials are insured while in transit in the Seller's vehicle and facility.
5. Pricing is valid 60 days for labor and the prices are based on specific quantities of individual releases made to the Seller.
6. Pricing, deliveries, product warranties and/or similar obligations will only be valid when provided in writing by an authorized officer of the Seller. A Representative Company and its' employees are not officers of the Seller.
7. The pricing per quantity, whether it's a single quantity of 100 or a spread of 100-249 means that quantity will be a single production build and ship cycle unless other wise noted on this quotation.
8. Cost due to cancellations or reductions in orders will be paid for by the Buyer.
9. The Seller will be responsible for all workmanship problems caused by the Seller only if the Seller is notified prior to any corrective action taken by the Buyer.
10. TERMS: NET 30 DAYS FROM DATE OF INVOICE
11. The warranty period is one year from date of shipment and is valid for workmanship and materials, but not physical abuse or improper electrical connections.

We thank you for your consideration and would like to be of service to you and your company. If you have any further questions, please feel free to contact your Account Manager, Jim Merritt.

Best Regards,

Alan C. Phillips
President

/cam

FOOTPRINT	Description Commercial	U/cost	Bd/Qty	Min/reel	cost	Description Mil M55342	U/cost	min/reel
----------			1					
SM/C_	3640GA472KAT3A-ND 3640GA472KAT3A Description CAP CER 4700PF 10% 2KV C0G 3640	$4.17	2	1000	$4,170.00	will advise		
SM/C_								
C1210_REV1	12107A102KAT2A-ND 12107A102KAT2A CAP CER 1000PF 500V NP0 1210 - AVX Corporation	$0.35	4	2000	$700.00	will advise		
C1210_REV1								
C1210_REV1								
C1210_REV1								
SM/R_1206	541-10.0KFTR-ND CRCW120610K0FKEA RES 10.0K OHM 1/4W 1% 1206 SMD CRCW	$0.01	1	5000	$50.00	D55342K07B10E0R	0.41	500
SM/R_1206	541-150KFTR-ND CRCW1206150KFKEA RES 150K OHM 1/4W 1% 1206 SMD CRCW	$0.01	7	5000	$50.00	D55342K07B150ER	0.41	500
SM/R_1206								
SM/R_1206								
SM/R_1206								
SM/R_1206								
SM/R_1206								
SM/R_1206								
SM/R_1206	541-51.0FTR-ND CRCW120651R0FKEA RES 51.0 OHM 1/4W 1% 1206 SMD CRCW	$0.01	4	5000	$50.00	D55342K07B51D1R 51.1 OHM	0.41	500
SM/R_120								

6								
SM/R_1206								
SM/R_1206								
SM/R_1206	541-100KFTR-ND CRCW1206100KFKEA RES 100K OHM 1/4W 1% 1206 SMD CRCW	$0.01	2	5000	$50.00	D55342K07B100ER	0.41	500
SM/R_1206	541-200KFTR-ND CRCW1206200KFKEA RES 200K OHM 1/4W 1% 1206 SMD CRCW	$0.01	2	5000	$50.00	D55342K07B200ER	0.41	500
SM/R_1206								
SM/R_1206	541-300KFTR-ND CRCW1206300KFKEA RES 300K OHM 1/4W 1% 1206 SMD CRCW	$0.01	1	5000	$50.00	D55342K07B301ER (301K)	0.41	500
SM/R_1206	541-750KFTR-ND CRCW1206750KFKEA RES 750K OHM 1/4W 1% 1206 SMD CRCW	$0.01	3	5000	$50.00	D55342K07B750ER	0.41	500
SM/R_1206								
SM/R_1206								
SM/R_1206	541-510KFTR-ND CRCW1206510KFKEA RES 510K OHM 1/4W 1% 1206 SMD CRCW	$0.01	1	5000	$50.00	D55342K07B511ER (511k)	0.41	500
SM/R_1206	541-91.0KFTR-ND CRCW120691K0FKEA RES 91.0K OHM 1/4W 1% 1206 SMD CRCW	$0.01	1	5000	$50.00	D55342K07B90E9R (90.9K)	0.41	500
SM/R_1206	541-75.0FTR-ND CRCW120675R0FKEA RES 75.0 OHM 1/4W 1% 1206 SMD CRCW	$0.01	1	5000	$50.00	D55342K07B75D0R	0.41	500

130.04.03.03 Base

WBS LEVEL 5	ACTIVITY ID	ACTIVITY DESCRIPTION	START DATE	FINISH DATE	DURATION	RESOURCE	HOURS	COST	TOTAL with Escalation
130.04.03.03.01 Base Encapsula	PD12490	Base Encapsulation Prototype V1 Desig	5/5/2010	8/17/2010	73	BNL M&S CS Travel		5,000	7,643
						Mechanical Engineer P2	125	7,226	11,786
						Mechanical Engineer P5	125	12,202	19,902
		Base Encapsulation Prototype V1 Design Total					250	24,428	39,330
	PD12500	Base Encapsulation Prototype V1 Produ	8/18/2010	12/22/2010	87	BNL M&S CS PO Purchases		15,000	17,535
						Mechanical Engineer P2	125	7,252	12,030
						Mechanical Engineer P5	125	12,246	20,314
						Mechanical Technician T2	1,590	92,832	153,977
		Base Encapsulation Prototype V1 Production Total					1,841	127,331	203,856
	PD12510	Base Encapsulation Prototype V2 Desig	12/27/2010	6/1/2011	110	Mechanical Engineer P2	125	7,259	12,159
		Base Encapsulation Prototype V2 Design Total					125	7,259	12,159
	PD12520	Base Encapsulation Prototype V2 Produ	6/2/2011	9/28/2011	82	BNL M&S CS PO Purchases		15,000	17,535
						Mechanical Engineer P2	125	7,215	12,085
						Mechanical Technician T2	520	30,351	50,838
		Base Encapsulation Prototype V2 Production Total					645	52,566	80,459
	PD12530	Base Encapsulation Preliminary Design	8/22/2012	12/20/2012	83	Mechanical Engineer P2	125	7,255	9,955
		Base Encapsulation Preliminary Design Total					125	7,255	9,955
	PD12540	Base Encapsulation Preproduction Run	12/21/2012	4/22/2013	82	BNL M&S CS PO Purchases		25,000	30,823
						Mechanical Engineer P2	200	11,582	15,919
						Mechanical Engineer P5	200	19,558	26,881
						Mechanical Technician T2	1,040	60,718	83,452
		Base Encapsulation Preproduction Run Total					1,440	116,857	157,074
	PD12550	Base Encapsulation Final Design	8/23/2013	2/14/2014	118	BNL M&S CE from UN: General Labor	961	20,776	22,000
						BNL M&S CS PO Purchases		24,999	31,465
						Mechanical Engineer P2	125	7,241	10,159
		Base Encapsulation Final Design Total					1,086	53,016	63,624
130.04.03.03.01 Base Encapsulation Development Total							**5,511**	**388,712**	**566,457**
130.04.03.03.02 Base Encapsula	PD12570	Base Encapsulation Production Run #1	1/22/2016	1/24/2017	263	BNL M&S CE from UW: General Labor	2,501	100,270	113,599
		Base Encapsulation Production Run #1 (Qty.5k) Total					2,501	100,270	113,599
	PD12580	Base Encapsulation Production Run#2 (	1/25/2017	1/26/2018	263	BNL M&S CE from UW: General Labor	4,000	160,369	186,648
		Base Encapsulation Production Run#2 (Qty.8k) Total					4,000	160,369	186,648
	PD12590	Base Encapsulation Production Run #3	1/29/2018	1/31/2019	264	BNL M&S CE from UW: General Labor	4,000	160,344	191,734

130.04.03.03.02 Base Encapsula	PD12590	Base Encapsulation Production Run #3 (Qty. 8k) Total					4,000	160,344	191,734
	PD12600	Base Encapsulation Production Run #4	2/1/2019	12/5/2019	220	BNL M&S CE from UW: General Labor	4,000	160,344	196,282
		Base Encapsulation Production Run #4 (Qty.8k) Total					4,000	160,344	196,282
	PD12571	Base Encapsulation Production Run #1	#N/A	#N/A	#N/A	BNL M&S CE Costs		275,001	316,769
		Base Encapsulation Production Run #1 (Qty.5k) Total						275,001	316,769
	PD12581	Base Encapsulation Production Run#2 (	#N/A	#N/A	#N/A	BNL M&S CE Costs		549,999	650,827
		Base Encapsulation Production Run#2 (Qty.8k) Total						549,999	650,827
	PD12591	Base Encapsulation Production Run #3	#N/A	#N/A	#N/A	BNL M&S CE Costs		549,999	668,652
		Base Encapsulation Production Run #3 (Qty. 8k) Total						549,999	668,652
	PD12610	Base Encapsulation Production Run #4	#N/A	#N/A	#N/A	BNL M&S CE Costs		275,000	342,247
		Base Encapsulation Production Run #4 (Qty.8k) Total						275,000	342,247
130.04.03.03.02 Base Encapsulation Production Total							**14,501**	**2,231,326**	**2,666,759**
130.04.03.03.03 Base Electronic	PD12630	Base Electronics Preproduction (Qty.20	8/22/2012	6/11/2013	200	BNL M&S CE Costs		13,000	13,661
						BNL M&S CE from UW: Sr. Electrical Engineer	40	4,608	4,777
		Base Electronics Preproduction (Qty.200) Total					40	17,608	18,438
	PD12650	Base Electronics Production Procureme	12/31/2014	1/21/2016	264	BNL M&S CE from UW: Sr. Electrical Engineer	79	9,125	10,059
		Base Electronics Production Procurement #1 (Qty.1 Total					79	9,125	10,059
	PD12660	Base Electronics Production Procureme	1/22/2016	1/25/2017	264	BNL M&S CE from UW: Sr. Electrical Engineer	79	9,125	10,338
		Base Electronics Production Procurement #2 (Qty.1 Total					79	9,125	10,338
	PD12670	Base Electronics Production Procureme	1/26/2017	1/30/2018	264	BNL M&S CE from UW: Sr. Electrical Engineer	79	9,125	10,622
		Base Electronics Production Procurement #3 (Qty.9 Total					79	9,125	10,622
	PD12651	Base Electronics Production Procureme	#N/A	#N/A	#N/A	BNL M&S CE Costs		299,999	336,242
		Base Electronics Production Procurement #1 (Qty.1 Total						299,999	336,242
	PD12661	Base Electronics Production Procureme	#N/A	#N/A	#N/A	BNL M&S CE Costs		299,999	345,589
		Base Electronics Production Procurement #2 (Qty.1 Total						299,999	345,589
	PD12680	Base Electronics Production Procureme	#N/A	#N/A	#N/A	BNL M&S CE Costs		299,999	355,057
		Base Electronics Production Procurement #3 (Qty.9 Total						299,999	355,057
130.04.03.03.03 Base Electronics Production Total							**278**	**944,979**	**1,086,344**
Grand Total							**20,290**	**3,565,017**	**4,319,560**

REVISION HISTORY			
Rev	Description	Date	Appd
X	PRELIMINARY	X/X/XX	

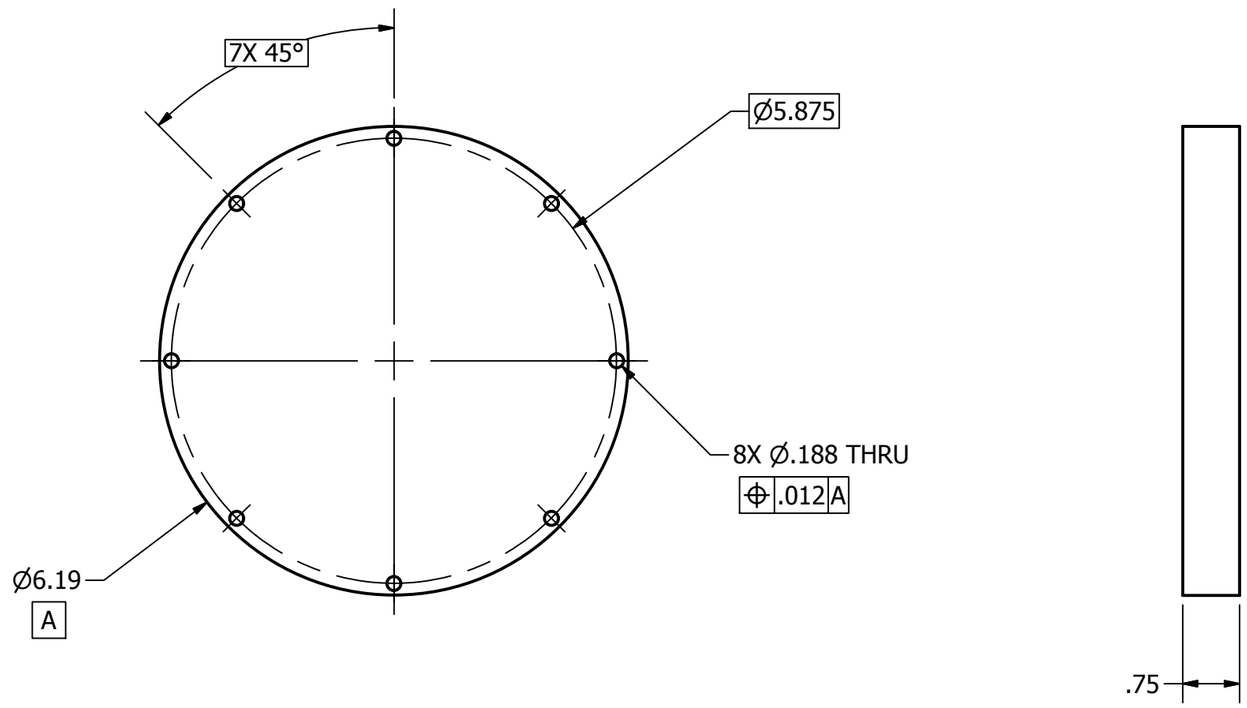

QTY	DRAWING NO.	REV
		SHEET
USED ON		REVISION STATUS OF SHEETS

THIRD ANGLE PROJECTION

INTERPRET IN GENERAL ACCORDANCE WITH ASME Y14.5M-1994
UNLESS OTHERWISE SPECIFIED:
ALL DIMENSIONS ARE IN INCHES
DIMENSIONS IN [ ] mm
X.X ± .1
X.XX ± .02
X.XXX ± .005
ANGLES ± .5°

FINISH ✓ BREAK EDGES: MAX. MIN.

XX

NEXT ASSEMBLY

Drawn By	RUGA	8/9/11
Cognizant Engineer		
Production Approval		
Project Office		

BROOKHAVEN NATIONAL LABORATORY
Upton, NY 11973

SIZE B | DRAWING NUMBER: 12 inch PMT BASE LID | REV. 1

Q.A. CATEGORY: | SCALE: 1/2 | WEIGHT: | SHEET 1 OF 1

REVISION HISTORY			
Rev	Description	Date	Appd

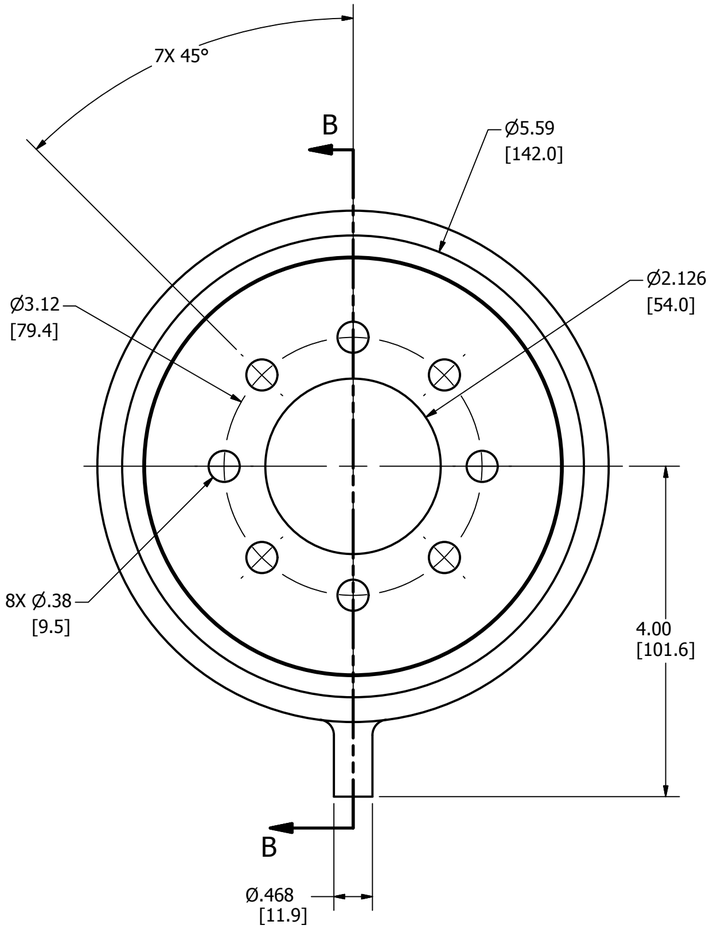

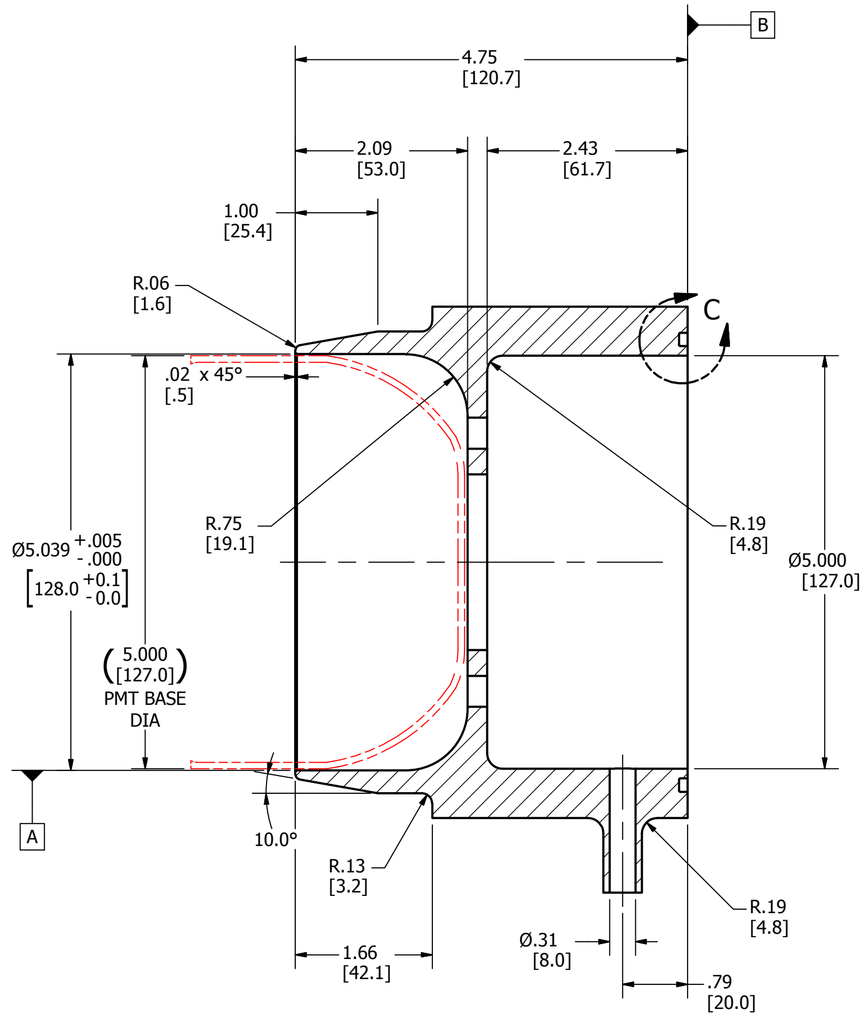

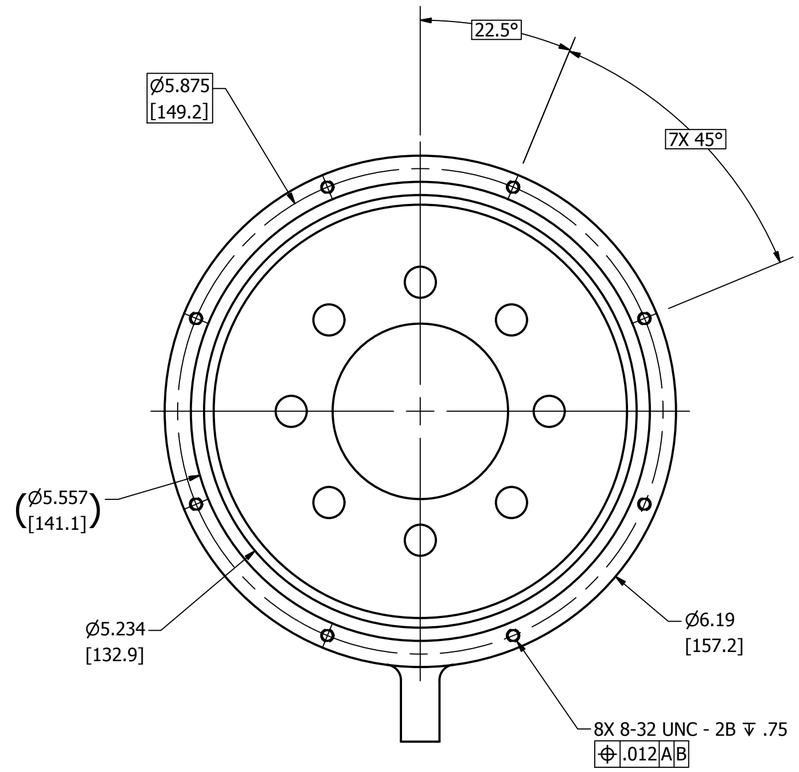

SECTION B-B
SCALE 3/4

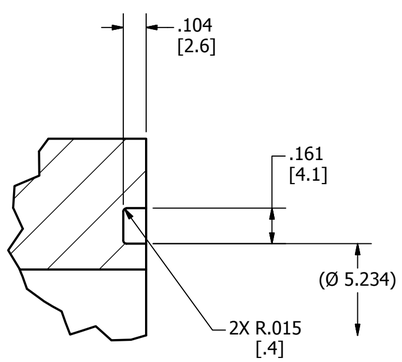

DETAIL C
SCALE 2/1

QTY	DRAWING NO.	REV
X		SHEET
	USED ON	REVISION STATUS OF SHEETS

THIRD ANGLE PROJECTION

INTERPRET IN GENERAL ACCORDANCE WITH ASME Y14.5M-1994
UNLESS OTHERWISE SPECIFIED
ALL DIMENSIONS ARE IN INCHES
DIMENSIONS IN [ ] mm
X.X ± .1
X.XX ± .02
X.XXX ± .005
ANGLES ± .5°
FINISH ✓ MAX. BREAK EDGES: MIN.

Drawn By	RUGA	8/9/11
Cognizant Engineer		8/8/2011
Production Approval		8/8/2011
Project Office		8/8/2011

BROOKHAVEN NATIONAL LABORATORY
Upton, NY 11973

SIZE C | DRAWING NUMBER: 12 inch PMT Base | REV A

Q.A. CATEGORY: | SCALE: 3/4 | WEIGHT: | SHEET 1 OF 1

Cost Breakdown of Encapsulation Materials and Labor per Base									
	Hours	Qty	Cost ($)						
Man Hrs Mfg	2.5			Estimate based on SNO PMT base labor					
Man Hrs QA	1			Estimate based on SNO PMT base labor					
Shrink Tubing			$4.00	Estimate based on previous quote From Vendor for 10" PMT					
End Cap			$5.00	Estimate based on previous quote From Vendor for 10" PMT					
Plastic Shell			$5.00	Estimate based on previous quote From Vendor for 10" PMT					
Potting Compound			$35.00	Estimate based on previous quote From Vendor for 10" PMT					
Cleaning Supplies			$6.00	Estimate					
Total			**$55.00**						

Material for One Base

FOOTPRINT	Description Commercial	U/cost	Bd/Qty	Min/reel	cost	Description Mil M55342	U/cost	min/reel
----------			1					
SM/C_	3640GA472KAT3A-ND 3640GA472KAT3A Description CAP CER 4700PF 10% 2KV C0G 3640	$	2	1000	$	will advise		
SM/C_								
C1210_REV1	12107A102KAT2A-ND 12107A102KAT2A CAP CER 1000PF 500V NP0 1210 - AVX Corporation	$	4	2000	$	will advise		
C1210_REV1								
C1210_REV1								
C1210_REV1								
SM/R_1206	541-10.0KFTR-ND CRCW120610K0FKEA RES 10.0K OHM 1/4W 1% 1206 SMD CRCW	$0	1	5000	$	D55342K07B10E0R	0	500
SM/R_1206	541-150KFTR-ND CRCW1206150KFKEA RES 150K OHM 1/4W 1% 1206 SMD CRCW	$	7	5000	$	D55342K07B150ER	0	500

SM/R_1206								
SM/R_1206								
SM/R_1206								
SM/R_1206								
SM/R_1206								
SM/R_1206								
SM/R_1206	541-51.0FTR-ND CRCW120651R0FKEA RES 51.0 OHM 1/4W 1% 1206 SMD CRCW	$0.00	4	5000	$0.00	D55342K07B51D1R 51.1 OHM		500
SM/R_1206								
SM/R_1206								
SM/R_1206								
SM/R_1206	541-100KFTR-ND CRCW1206100KFKEA RES 100K OHM 1/4W 1% 1206 SMD CRCW	$0.00	2	5000	$0.00	D55342K07B100ER	0	500
SM/R_1206	541-200KFTR-ND CRCW1206200KFKEA RES 200K OHM 1/4W 1% 1206 SMD CRCW	$0.01	2	5000	$0.00	D55342K07B200ER	0	500
SM/R_1206								
SM/R_1206	541-300KFTR-ND CRCW1206300KFKEA RES 300K OHM 1/4W 1% 1206 SMD CRCW	$0.00	1	5000	$0.00	D55342K07B301ER (301K)	0	500

SM/R_1206	541-750KFTR-ND CRCW1206750KFKEA RES 750K OHM 1/4W 1% 1206 SMD CRCW	$0.00	3	5000	$0.00	D55342K07B750ER	0	500
SM/R_1206								
SM/R_1206								
SM/R_1206	541-510KFTR-ND CRCW1206510KFKEA RES 510K OHM 1/4W 1% 1206 SMD CRCW	$0.00	1	5000	$0.00	D55342K07B511ER (511k)	0	500
SM/R_1206	541-91.0KFTR-ND CRCW120691K0FKEA RES 91.0K OHM 1/4W 1% 1206 SMD CRCW	$0.00	1	5000	$0.00	D55342K07B90E9R (90.9K)	0	500
SM/R_1206	541-75.0FTR-ND CRCW120675R0FKEA RES 75.0 OHM 1/4W 1% 1206 SMD CRCW	$0.00	1	5000	$0.00	D55342K07B75D0R	0	500

	LBNE Water Cherenkov Detector **BASIS of ESTIMATE FORM (BoE)**	**Date of Estimate: 18-Nov-2011** **Revision #: 1** **Prepared By: Dan Wahl** **Approved By:** **Level 2 Manager**

WBS Number: **130.04.03.04**	**WBS Title:** **Cable Assembly**
WBS Dictionary: **Cable Assembly Design, Prototype Creation and Evaluation, Production of the Assembly**	
Cost Type **(check all that apply):** _x__ EDIA Material __x_ EDIA Labor _x__ MFG Material ___ MFG Labor	**Costing Method** **(check all that apply):** _x__ Engineering Judgment ___Physicist Estimate ___ Level of Effort __x_ Vendor Quote (attached) ___ Catalog Price (specify) ___ Prior purchase ___ Prior experience ___ Parametric Estimate ___ Other- Description:_____
Attach Relevant Documents (including but not limited to):	
M&S Contingency (%)**: 20**	**Labor Contingency** (%)**: 37**

Basis of Estimate

1. The **Reference Design Cable Assembly** consists of:
    a. Four Lengths of cables in the 200KTon detector (from Jack Fowler using 29,138 PMTs)
        i. 4239 Cables 125m length = 529,875m
        ii. 6107 Cables 92m length = 561,844m
        iii. 6237 Cables 69m length = 430,353m
        iv. 12555 Cables 47m length = 590,085m
        v. Total 2,112,157m * 1.05 ~= 2,217,764m
    b. Coaxial cable similar to RG59 which meets WCD requirements.
    c. A single SHV Plug crimped to one end.
    d. A serial number label at the SHV end of cable.
    e. A single section of heat-shrink for added strain relief at the SHV end.

2. Design of the Custom Coax Cable: Engineering tasks include:
    a. Evaluate WCD requirements for the cable/component and create a specification.
    b. Defend the specification(s) via review and follow up modifications to the specification.
    c. Creation of an RFQ or RFP to be issued to Cable Vendors.
    (Including delivery Requirements, Dates, Packaging, Reel, QA)
    d. Evaluation of vendor response(s).
    e. Selection of vendor.
    f. UW Procurement
    g. Repeat steps (a-f) for the SHV connector, and other components as needed.

3. Execution and Development of a Prototype Design Verification Plan
    a. Write DV Plan.
    b. Receive prototype components and assemble.
    c. Test Prototypes to Plan.
    d. Defend results.

4. The Cable Assembly Production to occur at UW PSL
    a. Prepare fabrication drawings for the Cable Assembly.
    b. Write Assembly & Test Plan for production of cable assemblies.
    c. Plan Space & Tooling Requirements
    d. Manage Preparation of Cable Production Facility

<u>Component Costs:</u>

A budgetary quote has been obtained from Belden Cables. The quote request was based on a version of the SNO cable previously built by Belden in the early 90's. The cable specification number was YR29304. There were two changes in addition to the YR29304 specification. First the addition of a PE wax water block, second a "put-up-length" specification of 105meters +/- 10cm. Belden responded with quote #181894. The quantity quoted was 6,000,000 meters based on 55,000 lengths of 105meter cables. The Belden representative indicated that the actual price would be ~1.25 * the quote in order to account for the overhead by a distributor. The quoted length is for one WC detector (previous 100Kton and 50,000PMT version).

- 6,000,000meters Coaxial Cable @ $0.2853/ft = 6,000,000m * $0.9357/m = $5,614,704 quoted direct from Belden. A manufacture direct procurement without distribution may not be possible. Therefore expect to multiply this number by 1.25 for a total of $7,018,380 per detector. { $1.16973/meter }
- With the advent of the 200Kton detector and the need for four differing lengths of cable in the detector, the rate of $1.169/meter is applied to the new approximate lengths.

A budgetary quote for RG59 SHV Plug connectors has been requested from three vendors: Huber & Suhner, Kings, & Pasternack.

Similar quotes have been request from these vendors for SHV Plug connectors sized to the RG58 specification. Technically the Huber & Suhner components are superior carrying a true 50ohm impedance specification. However, the distinction may not be important for LBNE. The request was for a quantity of 2250 units and the results were: H&S = $10.08/unit, Kings = $10.25 and Pasternack = $17.12. These results are provided for comparison only with the present responses.

Pasternack: which historically was the high bidder, responds with quote number SQ569249 listing a per unit price of $15.89 in quantity of 55K, and $15.40 in quantity 110K. This is for the connector part number PE4343.

Kings: No Response

Huber & Suhner: ($5.81ea, 110K pc purchase)

- These three vendors would be candidates for a competitive bid. The low bidder is Huber & Suhner per unit price of $5.81. The extended cost would then be 55,000 * $5.81 per WC detector.
- With the advent of the 200Kton detector the $5.81 rate is applied to ~29138 pc's. This will likely under estimate the cost since the quantities are significantly less than the original quote.

Two other components are listed to be included in the Cable Assembly, the Serial Number label and a section of heat-shrink tubing. These two components together will not exceed $1.00 per cable based on historical purchases for the Daya Bay cables. Since this is a comparatively low figure to the cost of the coax and the connector, a specific quote was not requested for these materials.

- Heat-Shrink + Serial Number Label cost will be less than $1.00/unit. Therefore the cost for these two components will be less than $29,138 per detector.

Prototype Construction:

A suggested 200 Cables assemblies are to be built in FY13. Cost for these prototypes will likely be higher than the $125 figure unless the materials are acquired at the same rate under an agreement with the vendors. A guess estimate of $200 is used to cover the premium that may be expected for low volume purchase of the SHV connectors.

Production Assembly Cost Estimate:

Three budgetary quotations were obtained for estimating the cost of assembling, testing, and shipping the production cables.

Production Labor Cost Estimate(s): (KSM Electronics)

KSM has provided a very detailed plan;.

Assembly cost:	$8.92/Cable	
Shipping:	$2.34/Cable (based on 1000 per week)	
Total:	$11.26/Cable	29,000 * Total = $326,540/Detector

Production Labor Cost Estimate(s): (Stonewall Cable)

Stonewall Cable has provided --

Assembly cost:	$23.68/Cable	
Shipping:	$5.00/Cable (Shipping is a guess)	
Total:	$28.68/Cable	29,000 * Total = $831,720/Detector

Production Labor Cost Estimate(s): (Casco)

Casco has provided numbers with no supporting documentation.

Assembly cost:	$3.15/Cable	
Shipping:	$2.34/Cable(using KSM shipping quote since both are near Chicago)	
Total:	$5.49/Cable	29,000 * Total = $159,210/Detector

Final Summary Based on 29,138 channels:

Four Estimates for	PSL	KSM	Stonewall	Casco
Labor/Cable	$25.06	$8.92	$23.68	$3.15
Shipping/Cable	$??.??	$2.34	$ 5.00	$2.34
		$11.26	$28.68	$5.49

The KSM Quote the most credible based on interaction with the company. They seemed to take the estimation process most seriously and provide more than 20 pages of supporting documentation. The Casco quote was provided with a minimum of attention to detail. Therefore the KSM numbers are used for the purpose of this estimate.

Cost Summary Based on 29,138 channels:

Material	2,217,764m	Coaxial Cable	$2,592,567 per 200Kton detector
Material	29138 + SHV Plug Connectors		$ 169,291 per 200Kton detector
Material	Serial Number & Heat Shrink		$ 29,138 per 200Kton detector
Labor	Assemble Cables		$ 326,540 per 200Kton detector
			$3,117,536 per 200Kton detector
			$ ~107 per cable

Shipping: Guess-estimate $18/CableAssembly.

Summary Cost per Channel:

$107 + $18 = $125 for Materials, Production & Shipping.

Design and Engineering Labor:

The engineering function is to design, specify, procure, and oversee vendor production of all cable assemblies. The responsible design engineer provided the estimate of hours in the table below.

Cable Estimate

Task ID	Task Name	Duration (working days)	**EDIA M&S** (FY2010$ direct cost, without overhead or escalation)	**MFG M&S** (FY2010$ direct cost, without overhead or escalation)	Labor Resource Function and Titles (Titles from Master Resource List)	**EDIA Labor** % effort for duration or number of hours for each labor type respectively	**MFG Labor** % effort for duration or number of hours for each labor type respectively
	Cable Assembly Conceptual Design				Sr Elec Eng	200 hrs	
	Cable Assembly Prototype V1 Design				Sr elec Eng	200 hrs	
	Cable Assembly Prototype V1 Parts Procurement		$ 2,000.00		Sr Elec Eng	80 hrs	
	Cable Assembly Prototype V1 Fab				Sr Elec Eng	120 hrs	
					Elec Tech	40 hrs	
	Cable Assembly Prototype V1 Design Verification				Sr Elec Eng	160 hrs	
	Cable Assembly Prototype V2 Design				Sr Elec Eng	160 hrs	
	Cable Assembly Prototype V2 Procurement		$ 2,000.00		Sr Elec Eng	80 hrs	
	Cable Assembly Prototype V2 Fabrication				Sr Elec Eng	120 hrs	
					Elec Tech	40 hrs	
	Cable Assembly Prototype V2 Design Verification				Sr Elec Eng	160 hrs	
	Cable Assembly Preliminary Design		$ 10,000.00		Sr Elec Eng	400 hrs	
					Mech Designer	200 hrs	
	Cable Assembly Preproduction Run		$ 50,000.00		Sr Elec Eng	100 hrs	
	Travel to Vendors during Preproduction		$ 4,000.00				
	Receive and Inspect Preproduction Cable Assemblies				Sr Elec Eng	200 hrs	
	Cable Assembly Final Design		$ 5,000.00		Sr Elec Eng	200 hrs	
					Mech Designer	100 hrs	
	Travel during Final Design		$ 2,000.00				
	Cable Assembly Production Run#1 (Qty. 10k)			$ 1,250,000.00	Sr Elec Eng	200 hrs	
	Travel to Vendors		$ 2,000.00				
	Cable Assembly Production Run#2 (Qty. 10k)			$ 1,250,000.00	Sr Elec Eng	200 hrs	
	Travel to Vendors		$ 2,000.00				
	Cable Assembly Production Run#3 (Qty. 9k)			$ 1,125,000.00	Sr Elec Eng	200 hrs	
	Travel to Vendors		$ 2,000.00				
	Total		$ 81,000.00	$ 3,625,000.00			

Assumptions/Interfaces
Four cable lengths are assumed as described above. The exact lengths will change as routing develops. It is assumed that no special spacing is required to reduce crosstalk.

The attached price quote assumes that all the cable is procured in a single purchase order. Price could increase if multiple smaller orders are required.

Design of cable management (routing) is in WBS 1.4.2
Installation and final checkout are in WBS 1.4.8
Design of PMT base circuit and connection is in WBS 1.4.4
Cable strain relief at housing is assumed to be part of housing WBS 1.4.3.5

Contingency
The following methodology from the project office was used for selecting contingency percentages:
M&S Contingency Rules

1. 10% - Items that have been purchased on a previous project for which there is more than one potential vendor.
2. 20% - Items that have been purchased on a previous project but for which there is likely to be only one vendor.
3. 40% - Items that have analogous comparisons to components from other projects but may require additional design considerations.
4. 60% - Items that are similar to components previously designed but, because of an increase in complexity or other considerations, require a significant design time and perhaps prototyping.
5. 80% - 100% - Items that require new design with very little similarity to previously designed components. Significant prototyping.

Labor Contingency Rules

1. 20% - Work that has been done before for which a good estimate exists.
2. 40% - Work that has been done before but contains some minor uncertainty because of minor changes.
3. 60% - Work for which previous experience applies but because of increased complexity or uncertainty may require additional manpower.
4. 80% - Work that represents a scope with minor previous experience. Requires some prototyping.
5. 100% - Work that has never been done before and which requires significant prototyping.

Based on these rules the following contingencies were used:

WBS#	WBS Description	M&S Contingency	Labor Contingency	Comments
1.4.3.4.1	Cable Assembly Prototypes	20%	40% (20% on travel)	Multiple quotes for connectors and assembly, single quote on cable
1.4.3.4.2	Cable Assembly Preproduction	20%	40% (20% on travel)	Multiple quotes for connectors and assembly, single quote on cable
1.4.3.4.3	Cable Assembly Production	20%	40% (20% on travel)	Multiple quotes for connectors and assembly, single quote on cable

Appendix of Relevant Documents

Quotation: Direct from Belden Cable for the RG59 Coax cable.

Note: Price does not include ~1.25 factor for Distribution, (Newark).

BELDEN
SENDING ALL THE RIGHT SIGNALS

1-800-BELDEN1 (800-235-3361)
www.belden.com

Quote Number: **DP181894**

Belden Inside Rep: Lori Vaughn quotation.services@belden.com
Belden Sales Rep: Don Heinzen Don.Heinzen@Belden.com

Effective Date: May 21, 2010
Expiration Date: July 20, 2010

Customer Information

Customer Number: 1
Customer Name: PROSPECTIVE CUSTOMER
Address (line 1): Addr 1
City / State - Province / Zip: RICHMOND, IN 47374
Contact Name: Don Heinzen
Contact Phone Number: 608.235.7539
Customer Email: Don.Heinzen@Belden.com

Enduser / Project Information

Company Name: Univ of WI - Physical Sciences Laboratory
Address: 3725 Schneider Drive
City / State - Province / Zip: Stoughton, WI 53589-3034
Contact Name: Dan Wahl
Contact Phone Number: 608.877.2265

Line #	Part #	Description	Color	Put-up / Std Pack	Quantity Quoted	Quoted Price	UOM	Extended Price
1	1	Quote 6,000,000 'meters' of YR29304 except add PE Wax water blocking. Quote 105 meter +/-10cm putups.	Per spec.	105 meters	19,680,000	0.2853	FT	5,615,491.20
							Quoted Total	$5,615,491.20

Best Quotation: from Huber Suhner to provide SHV connectors.

HUBER+SUHNER

QUOTATION 191605 Ver. 1

Customer : 537000 Quotation : 191605 Date : 06-10-10 **Page : 2**

Line	Quantity	Unit	Item	Price	Curr./Uom	Amount
				Carry Forward :		321750.00
2 alt.	110000	PCE	22541992 11_SHV-50-4-1/133_NE MOQ is 110000 pcs, MCO is 10,000 pcs	5.8100	USD/PCE	639100.00

Orders for the items quoted herein are non-cancelable and non-returnable. Please contact your HUBER+SUHNER sales representative if you would like to enter into a supplier agreement.

Total USD
321750.00

Prepared by: Lynley Solt

Term of Delivery	Free on Board Essex, VT
Terms of Payment	Net 30 Days
This quotation expires on	07-07-2010

All stated product availability is subject to prior sale.

Please reference this quotation number when ordering.

Your Contact Person is :

APEX R.F. SALES
8812 Ackman Road
Crystal Lake
IL
260-672-8173
jefflarkin@dls.net

KSM Electronics Quotation for assembling the Cable + SHV

KSM ELECTRONICS INC

CHICAGO, IL • TAMARAC, FL • ATLANTA, GA

Specialists In Wire • Tubing • Connectors • Electronic Assemblies

QUOTATION # 08252010

TO: The University of Wisconsin	DATE:	August 25, 2010
Physical Science Laboratory	DELIVERY:	
	FOB.	Warrenville, IL
	OTHER:	
ATTN: Dan Wahl	TERMS:	Net 30
REF.YOUR INQUIRY #	SALES PERSON:	Michele Castronova John Steele

WE ARE PLEASE TO QUOTE AS FOLLOWS

KSM PART NO.	CUSTOMER PART NO.	DESCRIPTION	QUANTITY	PRICE
	TBD	Signal Cable Assemblies	100,000	$8.92/ea
		Test Cables	50-100	$51.99/ea
		*The test cables will have to be replaced when worn		
		Out, it is estimated between 50 and 100 will be need.		
		*This quote is for budgetary purposes only, to be		
		Finalized at a later date.		
		*Non-Cancelable/Non-Returnable		

Quotation Valid For 30 Days

Thank you for the opportunity to quote on your requirements.

By: Michele Castronova

Quotation for shipping 1000 cable assemblies per week to Rapid City South Dakota

Estimated Rate Quote

UPS Freight℠

Date:	September 2, 2010
Sending to:	KSM ELECTRONICS INC
Location:	27745 DIEHL RD
Fax number:	630-393-9314

Origin:	60555
Destination:	57701
Weight:	13524
Class:	60
Estimated rate:	$2,338.58
Quote number:	11673743
Comments:	2 business days

Thank you for choosing UPS Freight.

SPECIAL SERVICES - QUOTATIONS OF ESTIMATED CHARGES

1. When Carrier has furnished, either orally or in writing, an estimate of charges, such estimate will be given on the basis of provisions applicable to the facts that are made known to Carrier.

2. Estimates of freight charges are furnished as a convenience to the shipping public and represent nothing more than an approximation of freight charges which is not binding either on Carrier or the customer.

3. A QUOTE NUMBER will be assigned by Carrier and given to customer at the time of the quotation. The customer must show this quote number on the Bill of Lading at time of shipment.

Casco Quotation: for assembling the Cable + SHV.

600 Territorial Drive, Unit C
Bolingbrook, IL 60440
Phone: 630-771-9555
Fax: 630-771-0555

www.cascomanufacturing.com

Attn: Dan Wahl
Company: University of Wisconsin Physical Science Laboratory
Quote #: 090110JJB
Terms: Net-30 days
FOB: Shipping Point
Salesperson: Jackie James
Date: September 1, 2010

Casco Manufacturing is pleased to submit the following quotation:

Item	QTY	Description	Part #	Price/Ea	Total
1	100000	Provide labor, terminate SHV plug on one end with heat shrink, hi-pot test, TDR test and serialize cables	TBD	$3.15	$315,000.00
		*** All material to be supplied by Univ of Wisc PSL*			
		*** Preliminary pricing, based on limited information*			

** Upon placing order, we will build a one piece "First Article" for approval.*
** The balance of the order will be built after approval and will be subject to our lead-time.*
** All items are custom made to the customer specifications and are non-returnable unless there are manufacturer defects*
** Defective custom product may be returned for repair or replacement only*
**Components that are customer supplied and are required for rework or replacement assemblies due to any defects will be the responsibility of the customer. Customer supplied material will be replaced by the customer and labor by Casco for all repairs and replacements.*
** Any cancellations prior to shipping are subject to a cancellation charge based upon material in hand, custom material ordered but not yet received, operations performed and other related costs incurred.*

** This quote is valid for 30 days from the quotation date. Casco Manufacturing reserves the right to increase prices based on component cost increases.*

**A 2% monthly service charge shall be added to any invoice not paid within 30 days. All cost of collections, including attorney fees, are payable by Client.*
** An issuance of a purchase order indicates compliance with the above terms and conditions*

Stonewall Quotation: for assembling the Cable + SHV.

Stonewall Cable, Inc.
126 Hawkensen Drive
Rumney, NH 03266
Phone (800) 525-3303 Fax (603) 536-3240

Quote

Page: Page 1 of 1
To: Dan Wahl

Billing

Dan Wahl
Univ. of Wisconsin-Madison
Kegonsa Research Campus
3725 Schneider Dr.
Stoughton
WI 53589
United States

Shipping

TBD

Quote No: 88124-00 09/08/2010
Salesman: Scott Blunt Ext 121
Cust No: 248367
Cust Fax No:
Terms:
Ship Via:
FOB:

Lead time to be discussed at time of order.

NON-CANCELABLE, NON-RETURNABLE.
Manufactured, inspected, labeled and packaged to the workmanship standards of Stonewall Cable, Inc.

Bugetary quote only - prices subject to change.

Product Code	Description	Length	Qty	Price/Ea	Ext Price
TBD	Testing Equipment and Tooling		1	$8,437.77	$8,437.77
TBD	DUSEL Photo Multiplier Tube Signal Cable - SHV to Blunt		100000	$23.68	2,368,000.00
Engineering	Custom Engineering Fee		1	$30.00	$30.00

Total: • • • • • • • • •

No sales tax in NH
We ship FOB Origin (Rumney, NH 03266)

You may choose the shipping method from FedEX, UPS, or USPS.
The length is in feet unless otherwise noted.
This quote is valid for 90 Days.
You may place this order by telephone (800-525-3303), fax (603-536-3240), or e-mail (sales@stonewallcable.com).
When placing the order please refer to the quote number (88124-00).
Orders may be paid by Credit Card, Purchase Order (Net 30 Terms upon approval), COD, or Wire Transfer.

Scott Blunt Ext 121 — Salesman
09/08/2010 — Date

We build the cables that connect the world.

Cisco - DEC - HP - IBM - Unisys / SCSI - LAN - Fiber Optic - Serial - Parallel - HSSI - T1 / Tooling -

130.04.03.04 Cable Assembly

WBS LEVEL 5	ACTIVITY ID	ACTIVITY DESCRIPTION	START DATE	FINISH DATE	DURATION	RESOURCE	HOURS	COST	TOTAL with Escalation
130.04.03.04.01 Cable Assembly	PD12700	Cable Assembly Conceptual Design	1/11/2010	6/30/2010	120	BNL M&S CE from UN: General Labor	100	2,154	2,154
						BNL M&S CE from UW: Sr. Electrical Engineer	200	23,088	23,088
		Cable Assembly Conceptual Design Total					300	25,242	25,242
	PD12710	Cable Assembly Prototype V1 Design ar	10/4/2011	11/16/2011	30	BNL M&S CE from UW: Sr. Electrical Engineer	200	23,054	23,794
		Cable Assembly Prototype V1 Design and Specificat Total					200	23,054	23,794
	PD12720	Cable Assembly Prototype V1 Parts Pro	11/17/2011	1/18/2012	40	BNL M&S CE Costs		2,000	2,054
						BNL M&S CE from UW: Sr. Electrical Engineer	80	9,217	9,513
		Cable Assembly Prototype V1 Parts Procurement Total					80	11,217	11,567
	PD12740	Cable Assembly Prototype V1 Fabricatic	1/19/2012	1/25/2012	5	BNL M&S CE from UW: Electrical Technician	40	2,120	2,188
						BNL M&S CE from UW: Sr. Electrical Engineer	120	13,825	14,269
		Cable Assembly Prototype V1 Fabrication (at PSL) Total					160	15,946	16,457
	PD12750	Cable Assembly Prototype V1 Design Ve	1/26/2012	2/8/2012	10	BNL M&S CE from UW: Sr. Electrical Engineer	160	18,434	19,025
		Cable Assembly Prototype V1 Design Verification Total					160	18,434	19,025
	PD12760	Cable Assembly Prototype V2 Design	2/9/2012	7/31/2012	120	BNL M&S CE from UW: Sr. Electrical Engineer	160	18,388	18,978
		Cable Assembly Prototype V2 Design Total					160	18,388	18,978
	PD12770	Cable Assembly Prototype V2 Procurem	8/1/2012	9/26/2012	40	BNL M&S CE Costs		2,000	2,054
						BNL M&S CE from UW: Sr. Electrical Engineer	80	9,217	9,513
		Cable Assembly Prototype V2 Procurement Total					80	11,217	11,567
	PD12790	Cable Assembly Prototype V2 Fabricatic	9/27/2012	10/17/2012	15	BNL M&S CE from MA: Electrical Technician	40	2,531	2,623
						BNL M&S CE from UW: Sr. Electrical Engineer	120	13,825	14,327
		Cable Assembly Prototype V2 Fabrication (at PSL) Total					160	16,356	16,949
	PD12800	Cable Assembly Prototype V2 Design Ve	10/18/2012	10/31/2012	10	BNL M&S CE from UW: Sr. Electrical Engineer	160	18,434	19,121
		Cable Assembly Prototype V2 Design Verification Total					160	18,434	19,121
130.04.03.04.01 Cable Assembly Prototypes Total							**1,460**	**158,286**	**162,700**
130.04.03.04.02 PMT Cable Asse	PD12830	Cable Assembly Preliminary Design	11/1/2012	4/12/2013	109	BNL M&S CE Costs		10,000	10,547
						BNL M&S CE from UW: Mechanical Designer	199	13,817	14,333
						BNL M&S CE from UW: Sr. Electrical Engineer	400	46,087	47,807
		Cable Assembly Preliminary Design Total					600	69,904	72,686
	PD12840	Cable Assembly Preproduction Procure	4/15/2013	6/10/2013	40	BNL M&S CE Costs		50,000	52,735
						BNL M&S CE from UW: Sr. Electrical Engineer	100	11,521	11,951
						BNL M&S CE from UW: Travel		4,000	4,219

130.04.03.04.02 PMT Cable Asse	PD12840	Cable Assembly Preproduction Procure	4/15/2013	6/10/2013					
		Cable Assembly Preproduction Procurement (Qty.200 Total					100	65,521	68,905
	PD12860	Receive and Inspect Preproduction Cab	6/11/2013	6/24/2013	10	BNL M&S CE from UW: Sr. Electrical Engineer	200	23,042	23,901
		Receive and Inspect Preproduction Cable Assemblie Total					200	23,042	23,901
130.04.03.04.02 PMT Cable Assembly Preproduction Total							**900**	**158,467**	**165,492**
130.04.03.04.03 PMT Cable Asse	PD12880	Cable Assembly Final Design	10/21/2013	4/16/2014	120	BNL M&S CE Costs		5,000	5,416
						BNL M&S CE from UW: Mechanical Designer	100	6,899	7,350
						BNL M&S CE from UW: Sr. Electrical Engineer	200	23,088	24,596
						BNL M&S CE from UW: Travel		2,000	2,167
		Cable Assembly Final Design Total					300	36,988	39,529
	PD12890	Cable Assembly Production Procureme	12/31/2014	1/21/2016	264	BNL M&S CE from UW: Sr. Electrical Engineer	201	23,116	25,482
						BNL M&S CE from UW: Travel		2,001	2,243
		Cable Assembly Production Procurement #1 (Qty.10, Total					201	25,117	27,725
	PD12900	Cable Assembly Production Procureme	1/22/2016	1/24/2017	263	BNL M&S CE Costs		1,250,000	1,439,857
		Cable Assembly Production Procurement #2 (Qty. 10 Total						1,250,000	1,439,857
	PD12910	Cable Assembly Production Procureme	1/25/2017	1/29/2018	264	BNL M&S CE Costs		1,124,999	1,331,331
		Cable Assembly Production Procurement #3 (Qty. 9, Total						1,124,999	1,331,331
	PD12891	Cable Assembly Production Procureme	12/30/2014	1/20/2016	264	BNL M&S CE Costs		1,250,000	1,401,012
		Cable Assembly Production Procurement #1 (Qty.10, Total						1,250,000	1,401,012
	PD12901	Cable Assembly Production Procureme	1/21/2016	1/23/2017	263	BNL M&S CE from UW: Sr. Electrical Engineer	200	23,028	26,089
						BNL M&S CE from UW: Travel		1,999	2,302
		Cable Assembly Production Procurement #2 (Qty. 10 Total					200	25,027	28,392
	PD12920	Cable Assembly Production Procureme	1/24/2017	1/26/2018	264	BNL M&S CE from UW: Sr. Electrical Engineer	201	23,116	26,905
						BNL M&S CE from UW: Travel		2,001	2,368
		Cable Assembly Production Procurement #3 (Qty. 9, Total					201	25,117	29,274
130.04.03.04.03 PMT Cable Assembly Production Total							**901**	**3,737,248**	**4,297,119**
Grand Total							**3,260**	**4,054,001**	**4,625,311**

1.4.3.4 Cable Assembly

Parts List

Item	Length (m)	Qty	Cost/m	Total
YR29304	131.25	4239	$1.17	$650,395.07
YR29304	96.6	6107	$1.17	$689,635.42
YR29304	72.45	6237	$1.17	$528,236.79
YR29304	49.35	12555	$1.17	$724,299.83
RG59 SHV Plug Connector		29000	$5.81	$168,490.00
Heat-shrink+Serial Number Label		29000	$1.00	$29,000.00
Assemble cables (Quote from KSM Electronics)		29000	$11.26	$326,540.00
				$0.00
Total for Cable Assembly				$3,116,597.11

LBNE	**LBNE Water Cherenkov Detector** **BASIS of ESTIMATE FORM (BoE)**	**Date of Estimate: 18-Nov-2011** **Revision #: 1** **Prepared By: D. Wahl** **Approved By:** **Level 2 Manager**

WBS Number:	**WBS Title:**
130.04.03.05	**PMT Housing**

WBS Dictionary:

Includes specification, design, fabrication, procurement and delivery to the PA integration site(s) of all housings required for the project. It also includes the design and prototype fabrication of housings.

Cost Type **(check all that apply):**	**Costing Method** **(check all that apply):**
__x_ EDIA Material __x_ EDIA Labor _x__ MFG Material ___ MFG Labor	_x__ Engineering Judgment ___Physicist Estimate ___ Level of Effort _x__ Vendor Quote (attached) ___ Catalog Price (specify) ___ Prior purchase _x__ Prior experience ___ Parametric Estimate ___ Other- Description:_____

Attach Relevant Documents (including but not limited to):

M&S Contingency (%)**: 60**	**Labor Contingency** (%)**: 80**

Basis of Estimate

1) Reference Design for PMT Housing: The function of the PMT housing is to hold the PMT and its base cup and to provide a means to mount the assembly to the mounting fixtures. A potential benefit is that it could impede water flow in the event of an implosion and thereby mitigate a cascade event. As outlined in the Conceptual Design report, the PMT housing in this estimate does not provide isolation of the PMT from the hydrostatic pressure or provide a clear acrylic cover. The event that domes or a full pressure isolating enclosure are required is addressed in Risks WCD-014 and WCD-028. Also, the quotation and design of this housing was for the original baseline of a 10" PMT. The baseline PMT is now 12", so the designs and costs below will need to be scaled. Components of the PMT housing may include:

    a. A back-shell enclosing the PMT up to the horizon of the photocathode. The back shell is assembled from two half back-shells of identical shape. Injection molded plastic construction; these identical parts fasten together.
    b. The PMT sub assembly which is composed of a PMT, an electrical base circuit board, the cable assembly, and encapsulation of the circuit board PMT neck. The shape of the encapsulation is such that the subassembly may be captured in the back-shell components when assembled.
    c. A compliant silicone rubber gasket is placed between the back-shell components and the PMT Encapsulation to provide shock absorption. A second silicone rubber pad will fit between the rear-inside surface of the back shell(s) and the rear-flat of the encapsulation.
    d. The back-shell includes two legs per half shell, totaling four "legs when assembled" that attach to the PIU rectangle.
    e. Candidate material for the plastic is ABS without UV stabilizers or flame retardants.
    f. Tooling design for the injection molded shell, (two parts identical), and perhaps a mold design for the conical silicone gasket will be required. The parts may be joined with mechanical fasteners, chemical welding or a combination of both.

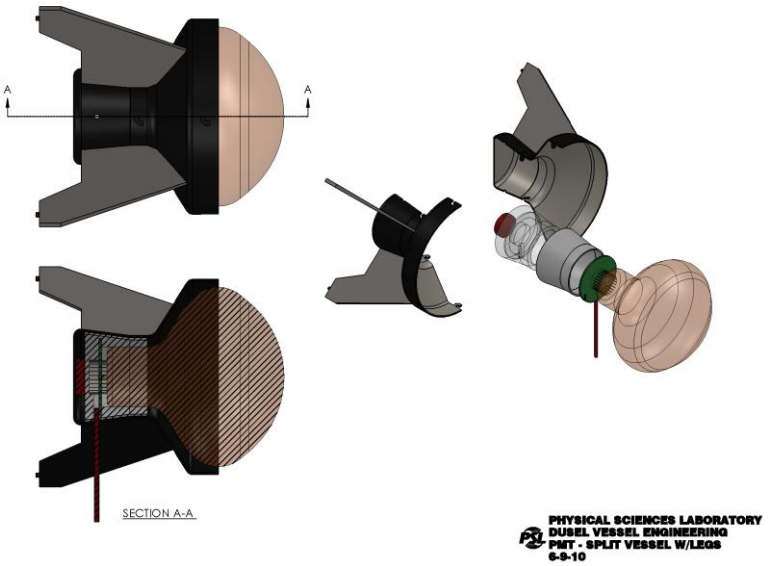

2) Basis of Estimate:
One quote exists from Zeier Plastics in Madison WI. The quote is based on the design concept shown in the figure. This is not a finished part design. The mass of the part could increase as will the complexity. Zeier's quote is ~$5.11 per piece which becomes $10.22 per PA for the injection molded component. Tooling estimated at $100K.

3) Additional components are shown in the illustration. These are once again molded components made from a silicone rubber. Fastener hardware yet to be chosen will also be required. $10 per PA is estimated for fabrication of these ancillary components yet to be chosen or specified.

With the above supporting comments a cost of $20/PMT Housing (for a 10" PMT) will account for the actual parts. For the current baseline 12" PMT, it is estimated that this number is scaled to $25/PMT. In addition the vendor had estimated the price of tooling required for the shell component at approximately $100K.

Labor:

The housing will require significant design effort as it has multiple functions and interfaces. The labor estimates in the table below are from the responsible design engineer.

Housing Estimate

Task ID	Task Name	Duration (working days)	**EDIA M&S** (FY2010$ direct cost, without overhead or escalation)	**MFG M&S** (FY2010$ direct cost, without overhead or escalation)	Labor Resource Function and Titles (Titles from Master Resource List)	**EDIA Labor** % effort for duration or number of hours for each labor type respectively	**MFG Labor** % effort for duration or number of hours for each labor type respectively
	Housing Conceptual Design				Sr Elec Eng	700 hrs	
					Mech Eng	500 hrs	
					Mech Des	1200 hrs	
	Housing Prototype V1 Procurement		$ 50,000.00		Sr Elec Eng	440 hrs	
					Mech Eng	60 hrs	
					Mech Des	200 hrs	
					Shop Tech	200 hrs	
					Elec Tech	40 hrs	
	Housing Prototype V1 Design Verification				Sr Elec Eng	250 hrs	
					Mech Eng	250 hrs	
	Housing Prototype V2 Design				Sr Elec Eng	200 hrs	
					Mech Designer	100 hrs	
	Housing Prototype V2 Procurement		$ 50,000.00		Sr Elec Eng	340 hrs	
					Mech Eng	40 hrs	
					Mech Des	100 hrs	
					Shop Tech	100 hrs	
					Elec Tech	40 hrs	
	Housing Prototype V2 Design Verification				Sr Elec Eng	250 hrs	
					Mech Eng	250 hrs	
	Housing Preliminary Design				Sr Elec Eng	200 hrs	
					Mech Designer	300 hrs	
					Mech Eng	200 hrs	
	Housing Preproduction Run		$ 160,000.00		Sr Elec Eng	100 hrs	
					Mech Eng	100 hrs	
	Housing Final Design				Sr Elec Eng	200 hrs	
					Mech Designer	200 hrs	
					Mech Eng	200 hrs	
	Housing Production Run#1 (Qty. 10k)			$ 250,000.00	Sr Elec Eng	200 hrs	
					Mech Eng	320 hrs	
	Housing Production Run#2 (Qty. 10k)			$ 250,000.00	Sr Elec Eng	200 hrs	
					Mech Eng	320 hrs	
	Housing Production Run#3 (Qty. 9k)			$ 225,000.00	Sr Elec Eng	200 hrs	
					Mech Eng	160 hrs	
	Total		$ 260,000.00	$ 725,000.00			

Assumptions/Interfaces

This estimate assumes that the housing is not required to isolate the PMT from hydrostatic pressure or exposure to ultrapure water. If an acrylic cover or pressure housing is required then the cost will likely increase.

Interfaces
-Since this is a wetted part, all materials will need to be tested for compatibility with ultrapure water.
-PMT 1.4.3.2. The dimensions of the housing are driven by the PMT. The housing also must not overly constrain the PMT.
-Base 1.4.3.3. The housing as currently designed encloses the encapsulated base.
-Cable Assembly 1.4.3.4. The housing will likely provide a strain relief for the cable assembly.
-Light Collector 1.4.3.6. The housing will likely provide a mounting structure for the light collector.
-PA Integration and Testing 1.4.3.7. The housing is a component of the PA.
-PMT Mounting 1.4.2. The housing is mounted to the structure provided by WBS 1.4.2.
-Light Barrier 1.4.2. The housing must be compatible with the light barrier provided by WBS 1.4.2.

Constraints
The housing design is driven by the final selected PMT and its mechanical characterization (WBS 1.4.3.2.2). If the PMTs are shown to be mechanically or chemically insufficient for exposure to ultrapure water and hydrostatic pressure in the detector then the housing design will change significantly.

Contingency
The following methodology from the project office was used for selecting contingency percentages:
M&S Contingency Rules

1. 10% - Items that have been purchased on a previous project for which there is more than one potential vendor.
2. 20% - Items that have been purchased on a previous project but for which there is likely to be only one vendor.
3. 40% - Items that have analogous comparisons to components from other projects but may require additional design considerations.
4. 60% - Items that are similar to components previously designed but, because of an increase in complexity or other considerations, require a significant design time and perhaps prototyping.
5. 80% - 100% - Items that require new design with very little similarity to previously designed components. Significant prototyping.

Labor Contingency Rules

1. 20% - Work that has been done before for which a good estimate exists.
2. 40% - Work that has been done before but contains some minor uncertainty because of minor changes.
3. 60% - Work for which previous experience applies but because of increased complexity or uncertainty may require additional manpower.
4. 80% - Work that represents a scope with minor previous experience. Requires some prototyping.

5. 100% - Work that has never been done before and which requires significant prototyping.

Based on these rules the following contingencies were used:

WBS#	WBS Description	M&S Contingency	Labor Contingency	Comments
1.4.3.5.1	Housing Prototypes	60%	80%	Additional unanticipated design and prototyping cycles may be required.
1.4.3.5.2	Housing Preproduction	60%	80%	Additional unanticipated design and prototyping cycles may be required.
1.4.3.5.3	Housing Production	60%	80%	Additional unanticipated design and prototyping cycles may be required.

Attachment A – Quote from Zeier Plastic

Hello Dan,

D) Winged half Shell, nominal wall thickness of ~3.0 mm
1) ABS Material cost: 1.10 lbs(weight 500 grams) x $1.60/Lb x 1.20(purchase markup and scrap factor)=$2.11
2) Molding: $2.50 each
3) Packaging allowance: $0.50 each

Total: $5.11 each half

Mold to produce one half with side actions: $100K domestic source

Thank you,

Dennis Zeier

Zeier Plastic & Mfg. Inc.
2203 N. Stoughton Road
Madison, WI 53704

Voice: (608) 244-5782
Fax: (608) 244-1810
dz@zeierplastic.com

130.04.03.05 PMT Housing

WBS LEVEL 5	ACTIVITY ID	ACTIVITY DESCRIPTION	START DATE	FINISH DATE	DURATION	RESOURCE	HOURS	COST	TOTAL with Escalation
130.04.03.05.01 PMT Housing P	PD12940	Housing Conceptual Design	1/11/2010	5/25/2011	346	BNL M&S CE from UW: Mechanical Designer	1,322	91,556	92,706
						BNL M&S CE from UW: Mechanical Engineer	502	45,625	46,198
						BNL M&S CE from UW: Sr. Electrical Engineer	699	80,523	81,534
		Housing Conceptual Design Total					2,522	217,703	220,438
	PD12950	Housing Prototype V1 Procurement	5/26/2011	7/20/2011	37	BNL M&S CE Costs		50,000	50,000
						BNL M&S CE from UW: Electrical Technician	40	2,118	2,175
						BNL M&S CE from UW: Mechanical Designer	200	13,866	14,240
						BNL M&S CE from UW: Mechanical Engineer	60	5,451	5,598
						BNL M&S CE from UW: Sr. Electrical Engineer	440	50,684	52,053
		Housing Prototype V1 Procurement Total					740	122,119	124,067
	PD12970	Housing Prototype V1 Design Verificati	7/21/2011	8/17/2011	20	BNL M&S CE from UW: Mechanical Engineer	250	22,735	23,349
						BNL M&S CE from UW: Sr. Electrical Engineer	250	28,803	29,580
		Housing Prototype V1 Design Verification Total					500	51,538	52,929
	PD12980	Housing Prototype V2 Design	8/18/2011	9/15/2011	20	BNL M&S CE from UW: Mechanical Designer	100	6,927	7,114
						BNL M&S CE from UW: Sr. Electrical Engineer	200	23,042	23,664
		Housing Prototype V2 Design Total					300	29,969	30,778
	PD12990	Housing Prototype V2 Procurement	9/16/2011	11/8/2011	37	BNL M&S CE Costs		50,000	50,912
						BNL M&S CE from UW: Electrical Technician	40	2,118	2,183
						BNL M&S CE from UW: Mechanical Designer	100	6,920	7,131
						BNL M&S CE from UW: Mechanical Engineer	40	3,634	3,745
						BNL M&S CE from UW: Sr. Electrical Engineer	340	39,175	40,368
		Housing Prototype V2 Procurement Total					520	101,847	104,338
	PD13010	Housing Prototype V2 Design Verificati	11/9/2011	12/6/2011	17	BNL M&S CE from UW: Mechanical Engineer	250	22,741	23,471
						BNL M&S CE from UW: Sr. Electrical Engineer	250	28,811	29,735
		Housing Prototype V2 Design Verification Total					500	51,552	53,207
130.04.03.05.01 PMT Housing Prototypes Total							**5,082**	**574,728**	**585,756**
130.04.03.05.02 PMT Housing P	PD13040	Housing Preliminary Design	8/15/2012	11/7/2012	60	BNL M&S CE from UW: Mechanical Designer	300	20,781	21,497
						BNL M&S CE from UW: Mechanical Engineer	200	18,170	18,796
						BNL M&S CE from UW: Sr. Electrical Engineer	200	23,019	23,812
		Housing Preliminary Design Total					700	61,970	64,104
	PD13050	Housing Preproduction Procurement (C	11/8/2012	2/28/2013	73	BNL M&S CE Costs		160,000	168,752
						BNL M&S CE from UW: Mechanical Engineer	100	9,095	9,434
						BNL M&S CE from UW: Sr. Electrical Engineer	100	11,522	11,952
		Housing Preproduction Procurement (Qty.200) Total					200	180,617	190,138
130.04.03.05.02 PMT Housing Preproduction Total							**900**	**242,587**	**254,242**

130.04.03.05.03 PMT Housing P	PD13080	Housing Final Design	11/12/2013	5/7/2014	120	BNL M&S CE from UW: Mechanical Designer	200	13,882	14,788
						BNL M&S CE from UW: Mechanical Engineer	200	18,224	19,414
						BNL M&S CE from UW: Sr. Electrical Engineer	200	23,088	24,596
		Housing Final Design Total					601	55,194	58,798
	PD13090	Housing Production Procurement #1 (Q	1/30/2015	1/25/2016	246	BNL M&S CE from UW: Mechanical Engineer	160	14,541	16,042
						BNL M&S CE from UW: Sr. Electrical Engineer	199	22,957	25,326
		Housing Production Procurement #1 (Qty.10,000)-La Total					359	37,498	41,368
	PD13091	Housing Production Procurement #1 (Q	12/31/2014	12/23/2015	246	BNL M&S CE Costs		300,201	335,994
		Housing Production Procurement #1 (Qty.10,000)-Ma Total						300,201	335,994
	PD13100	Housing Production Procurement #2 (Q	1/26/2016	1/27/2017	264	BNL M&S CE Costs		250,900	289,087
		Housing Production Procurement #2 (Qty. 10,000)-M Total						250,900	289,087
	PD13101	Housing Production Procurement #2 (Q	1/26/2016	1/27/2017	264	BNL M&S CE from UW: Mechanical Engineer	319	29,050	32,921
						BNL M&S CE from UW: Sr. Electrical Engineer	201	23,116	26,196
		Housing Production Procurement #2 (Qty. 10,000)-L Total					520	52,166	59,116
	PD13110	Housing Production Procurement #3 (Q	1/30/2017	2/1/2018	264	BNL M&S CE from UW: Mechanical Engineer	161	14,645	17,051
						BNL M&S CE from UW: Sr. Electrical Engineer	201	23,116	26,914
		Housing Production Procurement #3 (Qty. 9,000)-La Total					362	37,761	43,965
	PD13120	Housing Production Procurement #3 (Q	1/30/2017	2/1/2018	264	BNL M&S CE Costs		225,451	266,881
		Housing Production Procurement #3 (Qty. 9,000)-Ma Total						225,451	266,881
130.04.03.05.03 PMT Housing Production Total							**1,842**	**959,171**	**1,095,210**
Grand Total							**7,824**	**1,776,485**	**1,935,208**

	LBNE Water Cherenkov Detector **BASIS of ESTIMATE FORM (BoE)**	**Date of Estimate:** **Revision #: 29-Jul-2011** **Prepared By: M. Kaducak** **Approved By:** **Level 2 Manager**

WBS Number: **130.04.03.06**	**WBS Title:** **Light Collectors**

WBS Dictionary:

Includes specification, design, fabrication, procurement and delivery to the PA integration site(s) of all light collectors required for the project. It also includes the design and prototype fabrication of light collectors.

Cost Type **(check all that apply):** _x__ EDIA Material _x__ EDIA Labor _x__ MFG Material ___ MFG Labor	**Costing Method** **(check all that apply):** _x__ Engineering Judgment _x__Physicist Estimate ___ Level of Effort ___ Vendor Quote (attached) ___ Catalog Price (specify) ___ Prior purchase ___ Prior experience ___ Parametric Estimate ___ Other- Description:_____

Attach Relevant Documents (including but not limited to):

M&S Contingency (%)**: 60**	**Labor Contingency** (%)**: 60**

Basis of Estimate
There are two designs currently under consideration for the light collectors: Winston cones and wavelength shifting (WLS) scintillator plates. The design, cost, and understanding of the performance are still at an early stage. The plan is to select one of these two options prior to the preliminary design stage. The cost of procurement of production quantities is estimated to be $100/unit. The basic material costs described in the appendices are around $50/unit, but these do not include provisions for coating, optical couplant, fasteners, shipping, or quality control, which are estimated to add another $50/unit. The M&S cost of the WLS prototype V2 includes ~$3k for the test system and $2k for the prototype plates themselves. The labor estimates assume that the Winston cones are designed and prototyped at Drexel University under NSF S4 funding through FY12. The WLS plates are assumed to be designed and prototyped at Colorado State University, where NSF S4 funding is available only through FY11. Since light collectors are not currently included in WBS 1.4.3.8 PA Integration and Testing, technician labor during production is included here for attaching the units to PAs. The estimated labor hours are summarized in the table below.

Light Collector Estimate

Task ID	Task Name	Duration (working days)	**EDIA M&S** (FY2010$ direct cost, without overhead or escalation)	**MFG M&S** (FY2010$ direct cost, without overhead or escalation)	Labor Resource Function and Titles (Titles from Master Resource List)	**EDIA Labor** % effort for duration or number of hours for each labor type respectively	**MFG Labor** % effort for duration or number of hours for each labor type respectively
	Winston Cone Conceptual Design (S4)				Grad Student	320 hrs	
	Winston Cone Prototype V1 Procurement						
	Winston Cone Prototype V1 Testing				Grad Student	160 hrs	
	Winston Cone Conceptual Design (DOE)						
	Winston Cone Prototype V2 Procurement						
	Winston Cone Prototype V2 Testing				Grad Student	80 hrs	
	Winston Cone Preliminary Design				University Mech Eng	220 hrs	
					University Mech Des	220 hrs	
	WLS Plate Conceptual Design (S4)				CSU Faculty (off project)	400 hrs	
	WLS Plate Prototype V1 Procurement						
	WLS Plate Prototype V1 Testing				CSU Faculty (off project)	160 hrs	
					CSU Grad Student (off project)	320 hrs	
	WLS Plate Conceptual Design (DOE)				CSU Faculty (off project)	340 hrs	
					CSU Mech Eng	160 hrs	
					CSU Mech Des	100 hrs	
					CSU Grad Student	100 hrs	
	WLS Plate Prototype V2 Procurement		$ 5,000.00				
	Winston Cone Prototype V2 Testing				CSU Faculty (off project)	160 hrs	
					CSU Grad Student	320 hrs	
					CSU Mech Tech	160 hrs	
	Winston Cone Preliminary Design				CSU Faculty (off project)	220 hrs	
					CSU Grad Student	220 hrs	
					CSU Mech Eng	220 hrs	
					CSU Mech Des	220 hrs	
	Travel during Prelim Design		$ 2,000.00				
	Light Collector Preproduction Procurement		$ 80,000.00		Mech Eng	80 hrs	
	Light Collector Final Design				Faculty (off project)	440 hrs	
					CSU Grad Student	220 hrs	
					Mech Eng	800 hrs	
					Mech Tech	800 hrs	
	Travel during Final Design Phase		$ 6,000.00				
	Light Collector Production Run#1			$ 1,000,000.00	Mech Eng	356 hrs	
	(Qty. 10,000)				Mech Tech	1000 hrs	
	Light Collector Production Run#2			$ 1,000,000.00	Mech Eng	356 hrs	
	(Qty. 10,000)				Mech Tech	1000 hrs	
	Light Collector Production Run#3			$ 900,000.00	Mech Eng	356 hrs	
	(Qty. 9,000)				Mech Tech	900 hrs	
	Total		$ 93,000.00	$ 2,900,000.00			

Assumptions/Interfaces
This estimate assumes that both light collector design alternatives will be carried through conceptual design and that a selection will be made prior to preliminary design.

Assumed production method is by vendor fabrication.

Interfaces
-Since this is a wetted part, all materials will need to be tested for compatibility with ultrapure water.
-PMT 1.4.3.2. The dimensions of the light collector are driven by the PMT.
-Housing 1.4.3.5. The housing will likely provide a mounting structure for the light collector.
-PA Integration and Testing 1.4.3.7. The light collector will be integrated with the PA.
-PMT Mounting 1.4.2. The light collector may be integrated PMT mounting structure provided by WBS 1.4.2.
-Light Barrier 1.4.2. The light collector must be compatible with the light barrier provided by WBS 1.4.2.

Contingency
The following methodology from the project office was used for selecting contingency percentages:
M&S Contingency Rules

1. 10% - Items that have been purchased on a previous project for which there is more than one potential vendor.
2. 20% - Items that have been purchased on a previous project but for which there is likely to be only one vendor.
3. 40% - Items that have analogous comparisons to components from other projects but may require additional design considerations.
4. 60% - Items that are similar to components previously designed but, because of an increase in complexity or other considerations, require a significant design time and perhaps prototyping.
5. 80% - 100% - Items that require new design with very little similarity to previously designed components. Significant prototyping.

Labor Contingency Rules

1. 20% - Work that has been done before for which a good estimate exists.
2. 40% - Work that has been done before but contains some minor uncertainty because of minor changes.
3. 60% - Work for which previous experience applies but because of increased complexity or uncertainty may require additional manpower.
4. 80% - Work that represents a scope with minor previous experience. Requires some prototyping.
5. 100% - Work that has never been done before and which requires significant prototyping.

Based on these rules the following contingencies were used:

WBS#	WBS Description	M&S Contingency	Labor Contingency	Comments
1.4.3.6.1	Light Collector Prototypes	60%	60%	Similar units have been built for SNO, DoubleChooz, and IMB but will require prototyping and testing.
1.4.3.6.2	Light Collector Preproduction	60%	60%	Similar units have been built for SNO, DoubleChooz, and IMB but will require prototyping and testing.
1.4.3.6.3	Light Collector Production	60%	60%	Similar units have been built for SNO, DoubleChooz, and IMB but will require prototyping and testing.

Appendix A – Winston Cone Cost

From: Jelena Maricic <jelena@physics.drexel.edu>
Sent: Sunday, June 19, 2011 12:39 AM
To: Marc Kaducak; mantsch@fnal.gov
Subject: LC mass production cost

Hi Marc and Paul,
on Thursday we have ordered a new prototype using a 3D printer. Due to larger collector size, I had to change the company that puts metal coating on LC.

So, we found a new company called VacuCoat technologies and they were currently doing a rather large order, so it was easy for the sales representative to quote a mass production price and it turned out to be $15.00. They will also put protective coating over Al coating. They do not work with Ag unfortunately.

Earlier estimate for the plastic shell using thermal forming process was $34.00.

This brings total to around $50.00.

I think that this a minor detail in the overall cost estimate, but I thought I should let you know.

Best regards,
Jelena

Appendix B – WLS Plate Cost Comment

From: Buchanan,Norm <Norm.Buchanan@colostate.edu>
Sent: Thursday, March 10, 2011 9:01 AM
To: Marc Kaducak
Cc: Paul Mantsch; Buchanan,Norm
Subject: RE: LBNEWLS Cost Estimate

Hi Marc,

The numbers I have are the following. If we were to purchase the material off the shelf and cut it ourselves the per unit cost would be about $200 (materials and labor). We have talked to the vendor and they are willing to cast the plastic to our shape and the optimistic cost for that case is $50 per unit (given by the vendor but with many caveats). My feeling is the cost will likely be closer to the $50/unit and almost certainly under $100/unit.

Of course the vendor is being cautious with cost estimates since we are not looking at making any large purchase in the short term.

Cheers,
Norm.

--
Norm Buchanan
Department of Physics
Colorado State University
Ft. Collins, CO, 80523-1875
Office: (970) 491-6192
FAX: (970) 491-7947
http://hep.colostate.edu/~buchanan/

130.04.03.06 Light Collector

WBS LEVEL 5	ACTIVITY ID	ACTIVITY DESCRIPTION	START DATE	FINISH DATE	DURATION	RESOURCE	HOURS	COST	TOTAL with Escalation
130.04.03.06 Light Collector	PD13130	Winston Cone Conceptual Design (S4)	1/11/2010	10/3/2011	435	BNL M&S CE from DR: Uncosted Grad Student	322		
						BNL M&S CE from UN: General Labor	100	2,164	2,198
		Winston Cone Conceptual Design (S4) Total					422	2,164	2,198
	PD13140	Winston Cone Prototype V1 procuremei	7/30/2010	12/8/2010	90	BNL M&S CE from UN: General Labor	100	2,161	2,190
		Winston Cone Prototype V1 procurement Total					100	2,161	2,190
	PD13150	Winston Cone Prototype V1 Testing	12/9/2010	6/1/2011	120	BNL M&S CE from UN: General Labor	100	2,154	2,213
		Winston Cone Prototype V1 Testing Total					100	2,154	2,213
	PD13160	Winston Cone Conceptual Design (DOE)	10/4/2011	6/11/2012	171	BNL M&S CE from UN: General Labor	99	2,145	2,214
		Winston Cone Conceptual Design (DOE) Total					99	2,145	2,214
	PD13170	Winston Cone Prototype V2 Procuremei	6/12/2012	9/6/2012	60	BNL M&S CE from UN: General Labor	100	2,167	2,237
		Winston Cone Prototype V2 Procurement Total					100	2,167	2,237
	PD13180	Winston Cone Prototype V2 Testing	9/7/2012	11/26/2012	54	BNL M&S CE from DR: Uncosted Grad Student	80		
						BNL M&S CE from UN: General Labor	100	2,161	2,238
		Winston Cone Prototype V2 Testing Total					180	2,161	2,238
	PD13190	Winston Cone Preliminary Design	11/27/2012	2/14/2013	54	BNL M&S CE from UN: General Labor	100	2,161	2,241
						BNL M&S CE from UN: Mechanical Designer	220	10,145	10,523
						BNL M&S CE from UN: Non Sr. Mechanical Engineer	220	11,833	12,274
		Winston Cone Preliminary Design Total					539	24,139	25,039
	PD13200	WLS Plate Conceptual Design (S4)	1/11/2010	10/3/2011	435	BNL M&S CE from CS: Uncosted Physicist/Scientist	400		
						BNL M&S CE from UN: General Labor	100	2,164	2,198
		WLS Plate Conceptual Design (S4) Total					500	2,164	2,198
	PD13210	WLS Plate Prototype V1 procurement	9/13/2010	1/4/2011	77	BNL M&S CE from UN: General Labor	100	2,165	2,212
		WLS Plate Prototype V1 procurement Total					100	2,165	2,212
	PD13220	WLS Plate Prototype V1 Testing	1/5/2011	6/24/2011	120	BNL M&S CE from UN: General Labor	100	2,154	2,213
		WLS Plate Prototype V1 Testing Total					100	2,154	2,213
	PD13230	WLS Plate Conceptual Design (DOE)	10/4/2011	6/8/2012	170	BNL M&S CE from CS: Grad Student	100	1,926	1,988
						BNL M&S CE from CS: Mechanical Designer	100	6,018	6,211
						BNL M&S CE from UN: General Labor	100	2,169	2,239
						BNL M&S CE from CS: Non Sr. Mechanical Engineer	160	9,588	9,896
		WLS Plate Conceptual Design (DOE) Total					461	19,702	20,334
	PD13240	WLS Plate Prototype V2 Procurement	6/11/2012	9/5/2012	60	BNL M&S CE Costs		2,000	2,054
						BNL M&S CE from UN: General Labor	100	2,167	2,237
		WLS Plate Prototype V2 Procurement Total					100	4,167	4,291

	PD13250	WLS Plate Prototype V2 Testing	9/6/2012	12/3/2012	60	BNL M&S CE from CS: Grad Student	114	2,189	2,267
						BNL M&S CE from CS: Mechanical Technician	114	4,560	4,723
						BNL M&S CE from CS: Uncosted Physicist/Scientist	114		
						BNL M&S CE from UN: General Labor	100	2,167	2,245
		WLS Plate Prototype V2 Testing Total					442	8,917	9,235
	PD13260	WLS Plate Preliminary Design	12/4/2012	2/14/2013	49	BNL M&S CE from CS: Grad Student	110	2,108	2,186
						BNL M&S CE from CS: Mechanical Designer	110	6,586	6,831
						BNL M&S CE from UN: General Labor	100	2,162	2,243
						BNL M&S CE from CS: Non Sr. Mechanical Engineer	110	6,586	6,831
						BNL M&S CE from CS: Travel		2,000	2,110
		WLS Plate Preliminary Design Total					429	19,441	20,201
	PD13290	Light Collector Preproduction Procurem	4/15/2013	8/21/2013	90	BNL M&S CE Costs		80,000	84,376
						BNL M&S CE from UN: General Labor	100	2,161	2,241
						BNL M&S CE from CS: Non Sr. Mechanical Engineer	70	4,212	4,369
		Light Collector Preproduction Procurement Total					170	86,373	90,987
	PD13300	Light Collector Final Design	10/28/2013	11/18/2014	264	BNL M&S CE from UN: General Labor	100	2,170	2,319
						BNL M&S CE from UN: Mechanical Technician	890	56,940	60,863
						BNL M&S CE from UN: Sr. Mechanical Engineer	890	61,593	65,836
						BNL M&S CE from UN: Travel		6,001	6,522
						BNL M&S CE from UN: Uncosted Physicist/Scientist	446		
		Light Collector Final Design Total					2,326	126,703	135,540
	PD13310	Light Collector Production Run #1 (Qty.	12/31/2014	1/21/2016	264	BNL M&S CE from UN: General Labor	100	2,170	2,392
						BNL M&S CE from UN: Materials & Services		1,000,000	1,120,809
						BNL M&S CE from UW: Mechanical Technician	1,001	68,308	75,301
						BNL M&S CE from UN: Non Sr. Mechanical Engineer	356	19,189	21,153
		Light Collector Production Run #1 (Qty. 10,000) Total					1,457	1,089,667	1,219,655
	PD13320	Light Collector Production Run #2 (Qty.	1/22/2016	1/25/2017	264	BNL M&S CE from UN: General Labor	100	2,170	2,459
						BNL M&S CE from UN: Materials & Services		1,000,000	1,151,967
						BNL M&S CE from UW: Mechanical Technician	1,001	68,308	77,394
						BNL M&S CE from UN: Non Sr. Mechanical Engineer	356	19,189	21,741
		Light Collector Production Run #2 (Qty. 10,000) Total					1,457	1,089,667	1,253,560
	PD13330	Light Collector Production Run #3 (Qty.	1/26/2017	1/30/2018	264	BNL M&S CE from UN: General Labor	100	2,170	2,526
						BNL M&S CE from UN: Materials & Services		900,000	1,065,174
						BNL M&S CE from UW: Mechanical Technician	900	61,459	71,543
						BNL M&S CE from UN: Non Sr. Mechanical Engineer	356	19,189	22,337
		Light Collector Production Run #3 (Qty. 9,000) Total					1,357	982,818	1,161,579
130.04.03.06 Light Collector Total							**10,440**	**3,471,029**	**3,960,333**
Grand Total							**10,440**	**3,471,029**	**3,960,333**

PRODUCED BY AN AUTODESK EDUCATIONAL PRODUCT

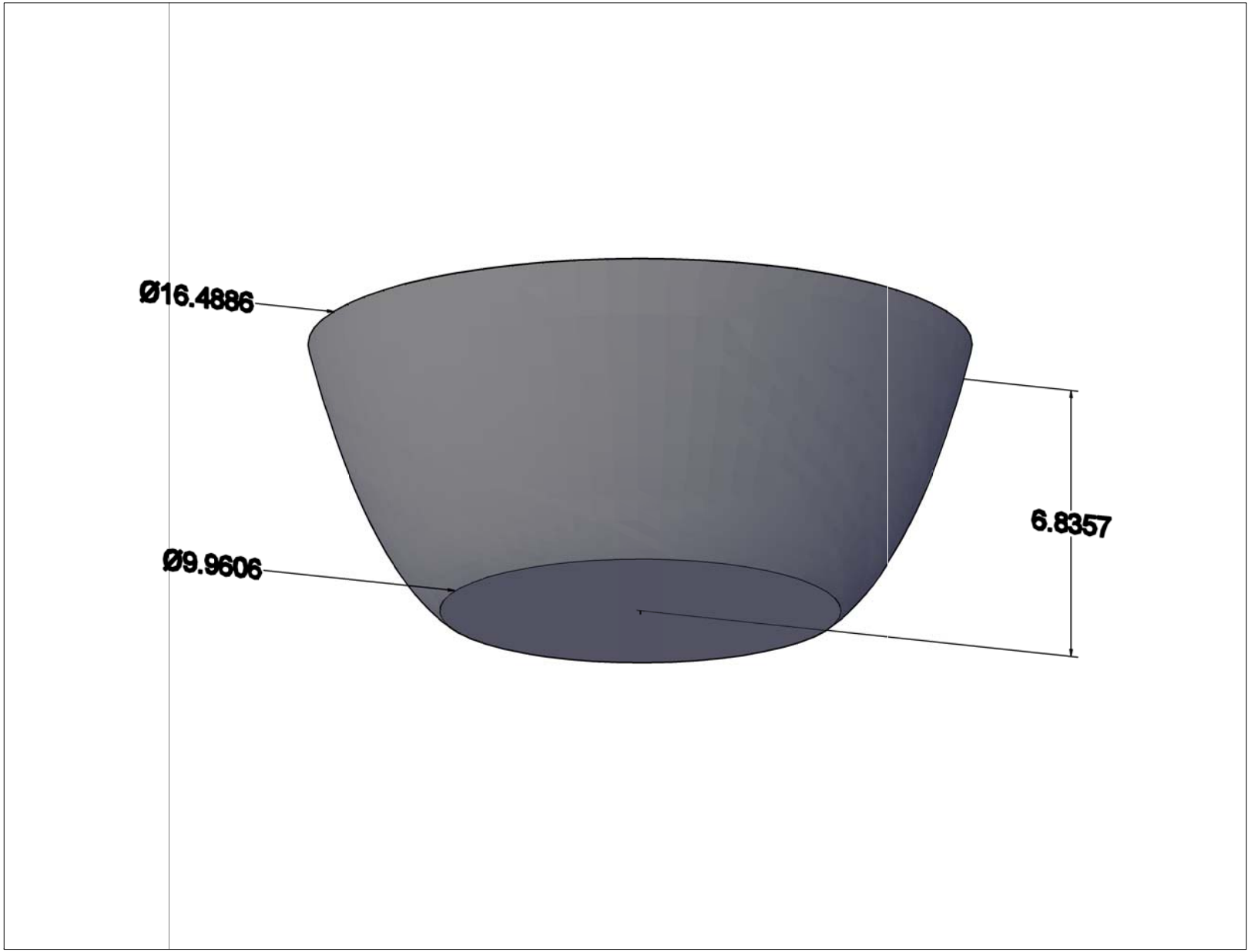

PRODUCED BY AN AUTODESK EDUCATIONAL PRODUCT

PRODUCED BY AN AUTODESK EDUCATIONAL PRODUCT

PRODUCED BY AN AUTODESK EDUCATIONAL PRODUCT

PRODUCED BY AN AUTODESK EDUCATIONAL PRODUCT

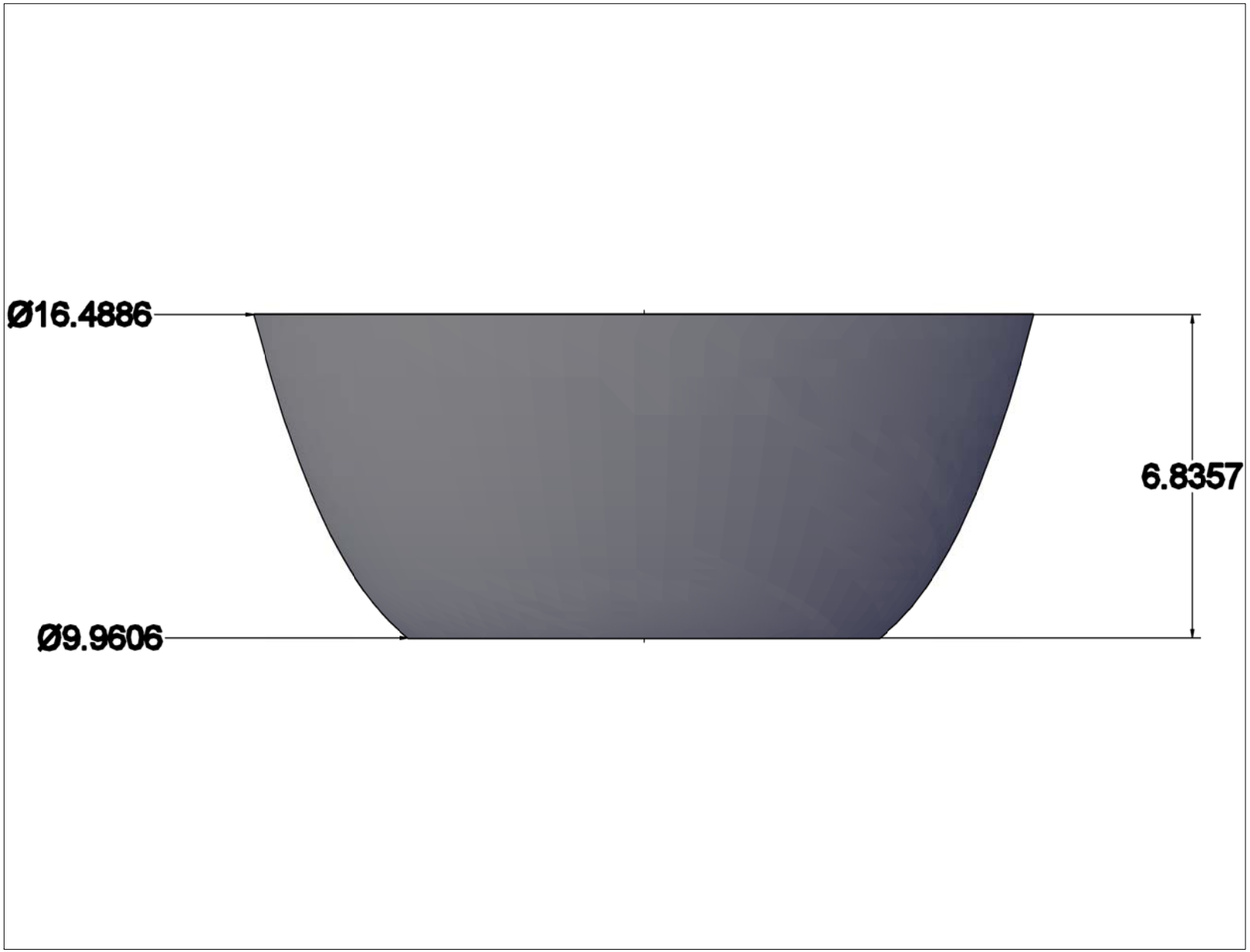

PRODUCED BY AN AUTODESK EDUCATIONAL PRODUCT

PRODUCED BY AN AUTODESK EDUCATIONAL PRODUCT

PRODUCED BY AN AUTODESK EDUCATIONAL PRODUCT

	LBNE Water Cherenkov Detector **BASIS of ESTIMATE FORM (BoE)**	**Date of Estimate: 8/11/11** **Revision #: 0** **Prepared By: Jim Haugen** **Approved By:** **Level 2 Manager**

WBS Number: **130.04.03.07**	**WBS Title:** **PA Integration and Testing**

WBS Dictionary: Integrate and test 29000 PMT Assemblies (PAs). Manage all aspects of this integration and test including Production Control, Quality Assurance, Material Handling, Process Engineering, Supplier Management, Reliability Testing, Acceptance Testing, Characterization and Direct Labor. Deliver PAs to the LBNE Logistics Center.

Cost Type **(check all that apply):** ___ EDIA Material ___ EDIA Labor _x__ MFG Material _x__ MFG Labor	**Costing Method** **(check all that apply):** _x__ Engineering Judgment _x__Physicist Estimate ___ Level of Effort ___ Vendor Quote (attached) ___ Catalog Price (specify) _x__ Prior purchase _x__ Prior experience ___ Parametric Estimate ___ Other- Description:_____

Attach Relevant Documents (including but not limited to):

M&S Contingency (%)**: 40**	**Labor Contingency** (%)**: 60**

Basis of Estimate
The basis of the estimate is rooted in comparison to the integration and test of over 5500 Digital Optical Modules (DOMs) for the IceCube project. IceCube DOMs were integrated and tested at 3 locations over the period of 2004 to 2009. The PMT detector unit for the IceCube DOM was the Hamamatsu R7081-02. The PMT and its associated electronic boards were potted in a gel contained in a glass sphere designed to withstand pressures of up to 10000 psi. While the IceCube DOM is more complicated than the LBNE PA in that the DOM contains associated DAQ hardware, there are similarities which allow for this analysis to be done. The similarities include the following: 1. Same basic PMT detector unit 2. Similar High Voltage base attached to the flying leads of the PMT. 3. Logistics constraints 4. High Yield and Reliability requirements 5. Similar test results to be analyzed. Differences include the lack of a pressure vessel and a larger PMT for the LBNE PA. The approximate 3500 units integrated and tested at the UW Physical Sciences Lab averaged approximately $431 per unit over the lifetime of the production run. This estimate for integration and test of the 29k PAs is approximately $171 per PA.

Scope of Work:

The scope of work includes integrating PMT assemblies (PA) and performing Acceptance Testing on them. PAs are constructed by soldering the HV base to the PMT, soldering a cable to the HV base, potting the base in a HV cap and finally securing the PMT into a one piece housing. After integration, the PAs will be placed in storage boxes that also provide a dark environment for Acceptance Testing. After PAs are shown to be good, they are shipped to the Logistics Center located near the Lead, South Dakota. This estimate includes labor, facilities, tooling, tools, materials, shipping costs and consumables to accomplish this work for 29000 PAs. All subassemblies of the PA are provided by other groups in the project and therefore their costs are not included here. The Installation Working Group will receive PAs at the Logistics Center.

The planned steady state production rate will be 8000 PAs per year from 2017 until 2019. PA production will begin in 2015 with 2000 PAs integrated and tested. The final rate of integration and test will require 32 PAs to be finished per day. This number compares to a steady state of IceCube DOM production at PSL of 8 per day.

Discussion:

WBS section 1.04.03.07 is composed of the following 4 sub-elements:

WBS ID	Title	Labor Hrs	Labor Cost	Materials and Supplies Cost	Total Cost
1.04.03.07.01	Prototype PA Integration and Testing	2020	$196,188	$43,000	$239,188
1.04.03.07.02	Preproduction PA Integration and Testing	7184	$434,164	$69,000	$503,164
1.04.03.07.03	PA Integration Factory Design, Acquisition and Setup	5530	$501,713	$140,061	$641,774
1.04.03.07.04	PA Integration and Testing - Production	42827	$2,631,813	$956,460	$3,588,273
	Totals	57561	$3,763,878	$1,208,521	$4,972,399

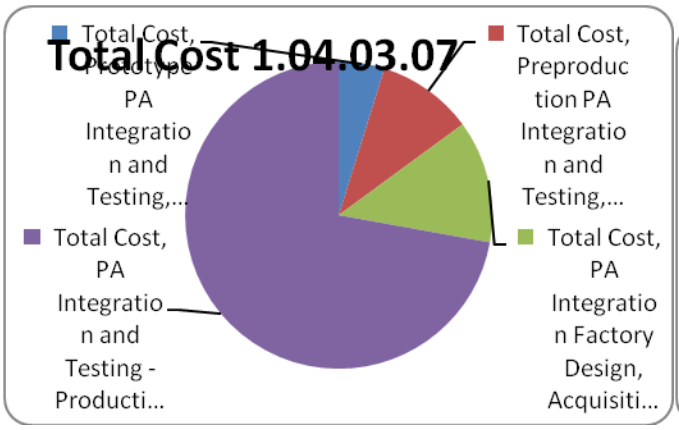

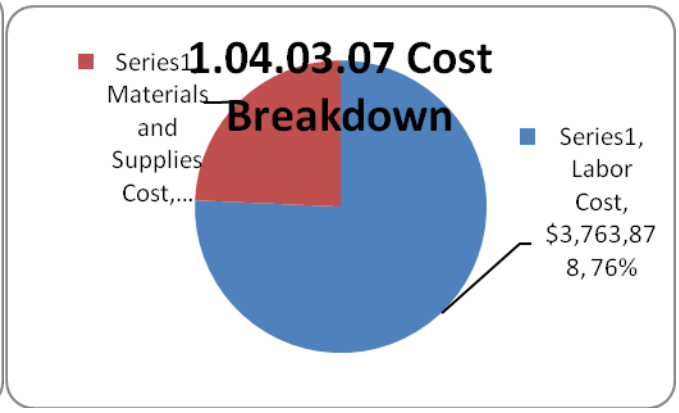

Prototype PA Integration and Testing comprises approximately 5% of the total almost $5M budget for this WBS element. It is primarily made up of labor and is currently scheduled to complete on Nov. 30, 2011. The labor consists of a .5 FTE Electrical Engineer and a .25 FTE Mechanical Engineer working at PSL in Stoughton, WI. There are an additonial 160 hours of Sr. Manager time allocated for this activity. Since this activity is happening now, the Basis of Estimate is rooted in the actual numbers of the time being spent on this project. The Materials and Supplies are for a number of prototype housings and HV base cups and are based on actual purchase requisitions. There is a modest $2k allocated for travel to allow 2 engineers to attend 1 LBNE Collaboration meeting.

Preproduction PA Integration and Testing is the phase which follows PA Prototyping in the schedule. This series of activities is scheduled to run from Dec 1, 2011 until March 25, 2014. The bulk of the money budgeted for this item (65%) will be spent in FY2012. In general, it is a direct continuation of the same labor already in place for the Prototyping phase. The milestone associated with this activity is the successful integration of up to 200 PAs in two separate Preproduction runs. In addition, the engineering staff will begin the design and procurement of fixtures and tooling required for PA production. The PSL Electrical Engineer will be working close to full time during this phase with the Mechanical Engineer approaching half time. There are also labor hours now allocated to PSL technicians to be involved with the actual integration and testing of the preproduction units, about 400 hours. The M&S budget of $69k is primarily allocated to the procurement of electrical test equipment and integration / test fixtures. The test equiment estimate is based on a UW Sr. Physicist with many years of experience testing and verifying PMT performance. The integration / test fixtures budget is less well known at this time as the PA design is not yet well defined but is reasonable based on IceCube DOM experience.

Phase 3 of this WBS element is PA Integration, Factory Design, Acquisition and Setup. This is a large scope category of work that begins Aug 17, 2012 and is scheduled to wrapup July 6, 2015. The spending profile is somewhat light in FYs 12-14 with the majority of money budgeted to be spent in FY15 (54%). There will also be some small steady state of continued PA Integration and Test during this phase to prepare for full scale production which kicks off in Jan, 2016. The labor team is still the same as in the previous two phases of this WBS element. There is additional time allocated for a Sr. Manager to help with final factory design and meeting staffing requirements. The PSL Electrical Engineer is now about half time while the mechanical engineer is back down to roughly quarter time. The M&S budget of $140k allows for the purchase of additional PA test stands, production jigs/fixtures/materials and also allows for a modest $20k

for building modifications that might be needed at PSL in Stoughton, WI. The basis of this estimate is engineeering judgement and experience based on what is know today with respect to the PA design and the anticipated testing requirements. There is expected to be some travel during this phase and there is $10k budgeted for a few person-trips.

The final phase of this WBS element is PA Integration and Testing – Production. This element simply captures the effort to integrate, test and ship to the South Dakota Logistics Center 29k PA production units. This effort has a budget of $3.6M which accounts for 72% of this WBS element's budget. The breakdown of the $3.6M is approximately $2.6M for labor and $956k for Materials & Supplies. The PA Production run would begin in Jan, 2016 and would continue until complete in Dec, 2019, basically 4 years of continuous PA production. The labor associated with PA Production is comprised of Mgr, Eng, Tech and DL labor – 12152 Eng/Mgr hours and 30675 Tech/DL hours. Basically, the team associated with PA production will be a continuous 1.5 engineering FTEs working with 3.7 tech/DL FTEs. The tech/DL time estimate is based on a best effort analysis of the time required to integrate and test a PA based on initial PA design parameters. The time is as follows:

PA DL / PA integration		
Solder base to PMT	12.5	minutes
Cable solder to base	10	minutes
Pot PMT into base cup	15	minutes
Housing attach	7.5	minutes
Mu Metal attach	7.5	minutes
Put in a box and move	5	minutes
	57.5	minutes
	0.96	hours

The PA design is not yet finalized and the process associated with PA integration and test is subject to change (perhaps significantly) if the design is modified. This ratio of approximately 1.5 eng FTE / 3.7 FTE compares favorably when compared to the IceCube DOM production run which was also done at PSL in Stoughton, WI. The $956k of M&S is comprised of the following major categories: Storage space leasing, integration/test materials & supplies, travel, shipping materials and finally, shipping costs associated with moving PAs between Wisconsin and South Dakota.

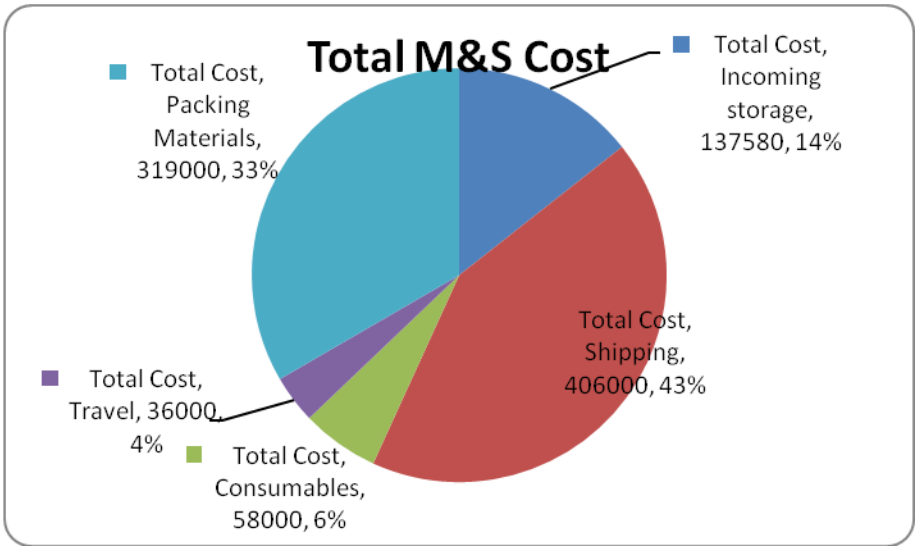

Shipping costs account for the largest item with an allocated budget of $406k. This is determined by calculating the costs associated with shipping 29k PAs from Stoughton, WI to Lead, SD - a distance of 828 miles. A typical semi-trailer has a volume of 4000 cubic feet. If we assume a 24” x 24” x 30” shipping box for a PA and a 75% packing efficiency, then this works out to 98 fully loaded trips required at about $4140 / trip. This estimate was made by the IceCube Logistics Manager. Packing materials for IceCube DOMs averaged about $10 per DOM. The PA will be a larger unit than a DOM and will have similar shipment requirements. This estimate uses $11 per PA based on the current simple PA design. Incoming storage would be at Reynolds Storage in Madison, WI – near Stoughton. The space will be primarily used for incoming PMT storage as PMT production is a potential supplier bottleneck and we will want to have adequate PMTs on hand to have continuous production. IceCube paid Reynolds $.43 / square foot / month storage for incoming DOM materials. This estimate is based on a requirement of 5332 square feet of storage space required for the full PA production run. Consumables (cleaners, epoxy, wipes, etc.) are estimated at $2 / PA based on engineering judgement and experience at this time. This will improve once the design and the production process flow are finalized. Travel is 2 people making 2 trips each per year for a total of 4 trips per production year.

Assumptions/Interfaces

1. The final PA design is similar in component count and integration complexity as compared to the current reference design of PMT, high voltage base potted in a cup and a one piece housing.
2. Integration and Test space will be available at the Physical Sciences Lab in Stoughton, Wisconsin when the production run actually begins in 2015.
3. A LBNE Logistics Center is built near the mine in Lead, South Dakota that can provide long term storage for finished and tested good PAs. This is the final delivery destination for integrated and tested good PAs.
4. Sufficient resources are allocated for the conceptual design and prototyping phase of the PA design. Design for Manufacturability, Design for Test and Design for Reliability must be considered in the early stages of the PA design.
5. All suppliers of subsystem materials (PMTs, HV bases, housings, etc.) are capable of delivering components on time with acceptable incoming yields. This BOE relies on excellent supplier quality of subsystem components.
6. Overhead functions will be supported by PSL during the production run of PAs and will be included in the costs of the engineering and technician labor provided by PSL.
7. The costs of the PMT, housing, HV base, cable assembly and other principal PA subsystem elements are not included in this estimate.

Constraints

It will be important for the funding profile to be able to support the PA Integration and Testing plan. This BOE allows for some surge capacity to account for subsystem delivery delays but it is not a significant component within the plan.

Comments

This BOE will increase in accuracy as the PA design gains maturity.

Contingency

The following methodology from the project office was used for selecting contingency percentages:
M&S Contingency Rules

1. 10% - Items that have been purchased on a previous project for which there is more than one potential vendor.
2. 20% - Items that have been purchased on a previous project but for which there is likely to be only one vendor.
3. 40% - Items that have analogous comparisons to components from other projects but may require additional design considerations.
4. 60% - Items that are similar to components previously designed but, because of an increase in complexity or other considerations, require a significant design time and perhaps prototyping.
5. 80% - 100% - Items that require new design with very little similarity to previously designed components. Significant prototyping.

Labor Contingency Rules

1. 20% - Work that has been done before for which a good estimate exists.
2. 40% - Work that has been done before but contains some minor uncertainty because of minor changes.
3. 60% - Work for which previous experience applies but because of increased complexity or uncertainty may require additional manpower.
4. 80% - Work that represents a scope with minor previous experience. Requires some prototyping.
5. 100% - Work that has never been done before and which requires significant prototyping.

Based on these rules the following contingencies were used:

WBS#	WBS Description	M&S Contingency	Labor Contingency	Comments
1.4.3.7.1	Prototype PA Integration and Testing	40%	60%	Similar experience exists from IceCube and SNO, but the PA design is still in progress.
1.4.3.7.2	Preproduction PA Integration and Testing	40%	60%	Similar experience exists from IceCube and SNO, but the PA design is still in progress.
1.4.3.7.3	PA Integration Factory Design, Acquisition, and Setup	40%	60%	Similar experience exists from IceCube and SNO, but the PA design is still in progress.
1.4.3.7.4	PA Integration and Testing - Production	40%	60%	Similar experience exists from IceCube and SNO, but the PA design is still in progress.

130.04.03.07 PA Integration and Testing

WBS LEVEL 5	ACTIVITY ID	ACTIVITY DESCRIPTION	START DATE	FINISH DATE	DURATION	RESOURCE	HOURS	COST	TOTAL with Escalation
130.04.03.07.01 Prototype PA In	PD13360	PA Integration Conceptual Design	10/4/2010	10/20/2011	262	BNL M&S CE from UW: Electrical Engineer	1,079	100,647	103,388
						BNL M&S CE from UW: Mechanical Engineer	540	49,082	50,419
						BNL M&S CE from UW: Sr. Project Management	160	26,970	27,704
						BNL M&S CE from UW: Travel		1,999	2,002
		PA Integration Conceptual Design Total					1,779	178,698	183,512
	PD13370	Procure Prototype PA Integration Hardw	7/21/2011	10/13/2011	59	BNL M&S CE Costs		41,000	41,132
						BNL M&S CE from UW: Electrical Engineer	40	3,741	3,844
		Procure Prototype PA Integration Hardware Total					40	44,741	44,976
	PD13380	Assemble V1 Prototype PAs	10/14/2011	11/10/2011	20	BNL M&S CE from UW: Electrical Engineer	40	3,730	3,849
						BNL M&S CE from UW: Mechanical Technician	60	4,096	4,228
		Assemble V1 Prototype PAs Total					100	7,826	8,077
	PD13390	Assemble V2 Prototype PAs	11/14/2011	12/13/2011	20	BNL M&S CE from UW: Electrical Engineer	40	3,730	3,849
						BNL M&S CE from UW: Mechanical Technician	60	4,096	4,228
		Assemble V2 Prototype PAs Total					100	7,826	8,077
130.04.03.07.01 Prototype PA Integration and Testing Total							**2,019**	**239,090**	**244,642**
130.04.03.07.02 Preproduction P	PD13410	Design Preproduction Fixtures and Tooli	12/14/2011	4/9/2012	80	BNL M&S CE from UW: Mechanical Engineer	320	29,101	30,035
		Design Preproduction Fixtures and Tooling Total					320	29,101	30,035
	PD13420	PA/PIU Integration Conceptual Design	10/21/2011	11/1/2012	259	BNL M&S CE from UW: Electrical Engineer	1,041	97,080	100,241
						BNL M&S CE from UW: Mechanical Engineer	624	56,764	58,612
						BNL M&S CE from UW: Sr. Project Management	119	20,105	20,760
						BNL M&S CE from UW: Travel		3,999	4,117
		PA/PIU Integration Conceptual Design Total					1,785	177,947	183,729
	PD13430	Procure Preproduction Integration Tooli	4/10/2012	7/3/2012	60	BNL M&S CE Costs		30,000	30,810
						BNL M&S CE from UW: Electrical Engineer	540	50,350	51,966
		Procure Preproduction Integration Tooling, Fixtur Total					540	80,350	82,776
	PD13440	Receive, Commission, and Install Prepro	7/6/2012	8/30/2012	40	BNL M&S CE from UW: Electrical Engineer	120	11,189	11,548
						BNL M&S CE from UW: Mechanical Technician	320	21,846	22,548
		Receive, Commission, and Install Preproduction In Total					440	33,035	34,096
	PD13460	Preproduction Run #1 Integration (asser	6/25/2013	9/19/2013	60	BNL M&S CE from UW: Electrical Engineer	120	11,189	11,606
						BNL M&S CE from UW: Electrical Technician	160	8,492	8,809
						BNL M&S CE from UW: Mechanical Engineer	120	10,913	11,320
						BNL M&S CE from UW: Mechanical Technician	160	10,937	11,345
		Preproduction Run #1 Integration (assemble 100 PA Total					560	41,531	43,080
	PD13480	Preproduction Run #2 Integration (asser	9/20/2013	11/15/2013	40	BNL M&S CE from UW: Electrical Engineer	120	11,189	11,857
						BNL M&S CE from UW: Electrical Technician	160	8,482	8,988
						BNL M&S CE from UW: Mechanical Engineer	120	10,913	11,564
						BNL M&S CE from UW: Mechanical Technician	160	10,923	11,575

	PD13480	Preproduction Run #2 Integration (assemble 100 PA Total					560	41,506	43,984
	PD13490	PA/PIU Testing Preliminary Design	6/25/2012	4/12/2013	199	BNL M&S CE from UW: Computer Professional	159	11,405	11,810
						BNL M&S CE from UW: Electrical Engineer	320	29,873	30,934
						BNL M&S CE from UW: Uncosted Grad Student	539		
						BNL M&S CE from UW: Uncosted Physicist/Scientist	1,081		
		PA/PIU Testing Preliminary Design Total					2,099	41,278	42,745
	PD13500	Procure Preproduction Test Hardware	4/15/2013	10/3/2013	120	BNL M&S CE Costs		35,000	36,932
						BNL M&S CE from MA: Uncosted Physicist/Scientist	40		
						BNL M&S CE from UW: Uncosted Physicist/Scientist	120		
		Procure Preproduction Test Hardware Total					160	35,000	36,932
	PD13510	Install and Commission Preproduction T	10/4/2013	12/3/2013	40	BNL M&S CE from UW: Electrical Engineer	160	14,918	15,893
		Install and Commission Preproduction Test System Total					160	14,918	15,893
	PD13520	Test Preproduction PIUs	12/4/2013	3/4/2014	60	BNL M&S CE from UW: Electrical Technician	160	8,492	9,047
		Test Preproduction PIUs Total					160	8,492	9,047
130.04.03.07.02 Preproduction PA/PIU Integration and Testing Total							**6,784**	**503,159**	**522,315**
130.04.03.07.03 PA Integration a	PD13550	PA Factory Preliminary Design	7/25/2012	8/14/2013	264	BNL M&S CE from UW: Electrical Engineer	1,040	96,985	100,510
						BNL M&S CE from UW: Mechanical Engineer	520	47,296	49,016
		PA Factory Preliminary Design Total					1,560	144,281	149,526
	PD13560	PA Factory Final Design	11/18/2013	11/20/2014	252	BNL M&S CE from UW: Electrical Engineer	1,041	97,040	103,765
						BNL M&S CE from UW: Mechanical Designer	121	8,379	8,960
						BNL M&S CE from UW: Mechanical Engineer	519	47,209	50,480
						BNL M&S CE from UW: Sr. Project Management	121	20,412	21,827
		PA Factory Final Design Total					1,802	173,040	185,032
	PD13570	Identify and Acquire Factory Facility and	12/31/2014	5/22/2015	100	BNL M&S CE from UW: Electrical Engineer	160	14,918	16,322
						BNL M&S CE from UW: Sr. Project Management	160	27,000	29,541
		Identify and Acquire Factory Facility and Staff Total					320	41,918	45,863
	PD13580	Procure Factory Equipment and Softwar	12/31/2014	3/27/2015	60	BNL M&S CE Costs		130,000	144,612
						BNL M&S CE from UW: Electrical Engineer	160	14,937	16,343
						BNL M&S CE from UW: Sr. Project Management	90	15,188	16,617
						BNL M&S CE from UW: Travel		10,000	11,124
		Procure Factory Equipment and Software Total					250	170,125	188,696
	PD13590	Install and Commission Factory Equipme	3/30/2015	6/22/2015	60	BNL M&S CE from UW: Electrical Engineer	520	48,503	53,068
						BNL M&S CE from UW: Electrical Technician	260	13,772	15,068
						BNL M&S CE from UW: General Labor	520	20,855	22,817
						BNL M&S CE from UW: Mechanical Technician	260	17,737	19,406
						BNL M&S CE from UW: Sr. Project Management	40	6,784	7,422
						BNL M&S CE Supplies		5,000	5,562
		Install and Commission Factory Equipment Total					1,600	112,650	123,342
130.04.03.07.03 PA Integration and Testing - Factory Design, Acquisiti Total							**5,532**	**642,014**	**692,459**
130.04.03.07.04 PA Integration a	PD13640	Assemble and Test Production #1 Qty. 5	1/22/2016	1/18/2017	259	BNL M&S CE from UW: Electrical Engineer	1,751	163,248	184,896
						BNL M&S CE from UW: Electrical Technician	2,608	138,257	156,591
						BNL M&S CE from UW: General Labor	2,608	104,560	118,425
						BNL M&S CE from UW: Sr. Project Management	150	25,350	28,711

130.04.03.07.04 PA Integration a	PD13640	Assemble and Test Production #1 Qty. 5	1/22/2016	1/18/2017	259	BNL M&S CE Supplies		10,000	11,516
						BNL M&S CE from UW: Travel		9,000	10,364
		Assemble and Test Production #1 Qty. 5,000 PAs-La Total					7,117	450,415	510,504
	PD13641	Assemble and Test Production #1 Qty. 5	1/22/2016	1/18/2017	259	BNL M&S CE Costs		148,700	171,236
		Assemble and Test Production #1 Qty. 5,000 PAs-Ma Total						148,700	171,236
	PD13680	Assemble and Test Qty.8,000 PAs at Pilo	3/16/2017	3/20/2018	263	BNL M&S CE from UW: Electrical Engineer	2,799	260,985	304,867
						BNL M&S CE from UW: Electrical Technician	4,051	214,759	250,869
						BNL M&S CE from UW: General Labor	4,051	162,416	189,725
						BNL M&S CE from UW: Sr. Project Management	239	40,397	47,189
						BNL M&S CE Supplies		16,000	19,003
						BNL M&S CE from UW: Travel		9,000	10,689
		Assemble and Test Qty.8,000 PAs at Pilot Plant-La Total					11,141	703,557	822,342
	PD13681	Assemble and Test Qty.8,000 PAs at Pilo	3/16/2017	3/20/2018	263	BNL M&S CE Costs		237,921	282,572
		Assemble and Test Qty.8,000 PAs at Pilot Plant-Ma Total						237,921	282,572
	PD13720	Assemble and Test Production #3 Qty. 8	3/20/2018	3/25/2019	264	BNL M&S CE from MA: Electrical Technician	3,931	248,417	298,135
						BNL M&S CE from UW: Electrical Engineer	2,801	261,168	313,438
						BNL M&S CE from UW: Electrical Technician	3,081	163,317	196,004
						BNL M&S CE from UW: General Labor	3,931	157,592	189,133
						BNL M&S CE from UW: Sr. Project Management	240	40,539	48,652
						BNL M&S CE Supplies		16,001	19,524
						BNL M&S CE from UW: Travel		9,000	10,981
		Assemble and Test Production #3 Qty. 8,000 PAs-La Total					13,984	896,034	1,075,866
	PD13721	Assemble and Test Production #3 Qty. 8	3/20/2018	3/25/2019	264	BNL M&S CE Costs		237,919	290,303
		Assemble and Test Production #3 Qty. 8,000 PAs-Ma Total						237,919	290,303
	PD13760	Assemble and Test Production #4 Qty. 8	5/20/2019	3/23/2020	220	BNL M&S CE from UW: Electrical Engineer	2,801	261,131	322,628
						BNL M&S CE from UW: Electrical Technician	3,773	200,008	247,111
						BNL M&S CE from UW: General Labor	3,773	151,261	186,883
						BNL M&S CE from UW: Sr. Project Management	240	40,466	49,996
						BNL M&S CE Supplies		16,001	20,098
						BNL M&S CE from UW: Travel		9,000	11,305
		Assemble and Test Production #4 Qty. 8,000 PAs-La Total					10,586	677,867	838,023
	PD13761	Assemble and Test Production #4 Qty. 8	12/10/2019	10/13/2020	220	BNL M&S CE Costs		237,919	302,607
		Assemble and Test Production #4 Qty. 8,000 PAs - Total						237,919	302,607
130.04.03.07.04 PA Integration and Testing - Production Total							**42,829**	**3,590,333**	**4,293,453**
Grand Total							**57,165**	**4,974,597**	**5,752,868**

	LBNE Water Cherenkov Detector **BASIS of ESTIMATE FORM (BoE)**	**Date of Estimate: 8/17/11** **Revision #:** **Prepared By: R. Van Berg** **Approved By:** **Level 2 Manager**

WBS Number: **130.04.04.01**	**WBS Title:** **Management and Safety**

WBS Dictionary:

This task covers reporting, project oversight, running reviews, attending meetings, and other non-technical management tasks. It also covers safety oversight and review for all electronics and DAQ peculiar issues.

Cost Type **(check all that apply):** _X_ EDIA Material _X_ EDIA Labor ___ MFG Material ___ MFG Labor	**Costing Method** **(check all that apply):** _X_ Engineering Judgment ___Physicist Estimate ___ Level of Effort ___ Vendor Quote (attached) ___ Catalog Price (specify) ___ Prior purchase ___ Prior experience ___ Parametric Estimate ___ Other- Description:_____

Attach Relevant Documents (including but not limited to):

M&S Contingency (%)**: 10%**	**Labor Contingency** (%)**: 20%**

Basis of Estimate
Details of Estimate: This is estimated as level of effort for doing reporting, project oversight, running reviews, attending meetings, and other non-technical management tasks. The 1/8th FTE (i.e. about 4 - 5 hours a week – about 200 hours per year for ten years) is based upon experience with ATLAS and CMS meeting and reporting requirements. Safety is also estimated, for simplicity, as a level of effort (about 1 hour a week) even though the safety effort is expected to be concentrated in the middle and end of the decade and many "safety" tasks are not readily distinguishable from "management" tasks as we must somehow manage to create not only a workable system but a safe system. Material Details No materials are needed, but there is expected to be significant travel involved in managing the development and production of the electronics for the Water Cherenkov Detector. The travel is estimated as four to five two person trips per year (to BNL and FNAL from BU or Penn) based upon ATLAS and CMS experience. East Coast to BNL is modeled as driven at $300-$500 for one to two day meetings while East Coast to FNAL is assumed flown at $500-700 per person for one or two day meetings. Travel for meetings with vendors or collaborators in this estimate assumes short trips with hotel, car rental, and per diem. For the installation task (see WBS 1.4.4.9 below), we assume semi-permanent stationing in the Lead S.D. area and so long term apartment rentals and no per diem. Contingency & Method Contingency was estimated using the standard LBNE methodology, no unusual aspects to these tasks.

130.04.04.01 Management and Safety

WBS LEVEL 5	ACTIVITY ID	ACTIVITY DESCRIPTION	START DATE	FINISH DATE	DURATION	RESOURCE	HOURS	COST	TOTAL with Escalation
130.04.04.01 Management and	EL1400	Management	1/11/2010	4/5/2022	3122	BNL M&S CE from UN: Sr. Electrical Engineer	2,217	248,261	281,799
						BNL M&S CE from UN: Travel		64,001	73,456
		Management Total					2,217	312,262	355,255
	EL1410	Safety	1/11/2010	5/4/2016	1578	BNL M&S CE from UN: Sr. Electrical Engineer	552	61,840	65,051
		Safety Total					552	61,840	65,051
130.04.04.01 Management and Safety Total							**2,769**	**374,102**	**420,306**
Grand Total							**2,769**	**374,102**	**420,306**

Cost Estimate for WCD Electronics - 200kT version August 2011

ID	WBS	Details on Tabs		Name	Notes	EDIA -- Non-recurring Labor	EDIA -- Non-recurring M&S	Manufacturing -- Per Cavern Labor	Manufacturing -- Per Cavern M&S	M&S Costs (FY2010$) Direct	M&S Costs (FY2010$) Indirect	Labor Costs (FY 2010$) Direct	Labor Costs (FY 2010$) Indirect			
	1.4.4			**Electronics**		***$ 1,561,676.00***	***$ 455,340.00***	***$ 664,992.00***	***$ 3,305,909.28***							
	1.4.4.1			Management and Safety		$ 311,500.00	$ 64,000.00			$ 40,000	$ 24,000	$ 194,688	$ 116,813	**$ 375,500**		
	1.4.4.1.1			Management	1/8 FTE Sr. Engr for ten years	$ 249,200.00	$ 64,000.00									55.625
	1.4.4.1.2			Safety	1/32 FTE Sr Eng for ten years	$ 62,300.00										
	1.4.4.2	Base_Lab	Base_M&S	Electrical Design/Characterization Cables and Bases		*$ 14,336.00*	*$ 34,500.00*	*$ -*	*$ -*	$ 34,500		$ 8,960	$ 5,376	**$ 48,836**		
	1.4.4.3	HV_Lab	HV_M&S	High Voltage		*$ 80,128.00*	$ 18,000.00	*$ 64,960.00*	*$ 876,723.28*	$ 894,723		$ 90,680	$ 54,408	**$ 1,039,811**		
	1.4.4.4	FE_Lab	FE_M&S	Front End Elect.		*$ 722,496.00*	$ 238,440.00	*$ 122,944.00*	*$ 1,328,958.00*	$ 1,567,398		$ 528,400	$ 317,040	**$ 2,412,838**		
	1.4.4.5	CLK_Lab	CLK_M&S	Trigger and Clock Distribution	Hardware trigger + clock board and cables	*$ 112,640.00*	$ 18,000.00	*$ 68,300.80*	*$ 60,498.00*	$ 78,498		$ 113,088	$ 67,853	**$ 259,439**		
	1.4.4.6	TDAQ_Lab	TDAQ_M&S	DAQ	Includes software trigger	*$ 87,680.00*	$ 44,200.00	*$ 31,360.00*	*$ 132,307.00*	$ 176,507		$ 74,400	$ 44,640	**$ 295,547**		
	1.4.4.7	MON_Lab	MON_M&S	Monitoring and Control	Voltage monitoring, rack on/off controls	*$ 37,440.00*	*$ 5,900.00*	*$ 22,396.80*	*$ 89,975.00*	$ 95,875		$ 37,398	$ 22,439	**$ 155,712**		
	1.4.4.8			Power/Racks/Cooling		*$ 195,456.00*	*$ 32,300.00*	*$ 77,350.40*	*$ 621,224.00*	$ 653,524		$ 170,504	$ 102,302	**$ 926,330**		
	1.4.4.8.1	LV_Lab	LV_M&S	Low Voltage Power		*$ 50,176.00*	$21,300.00	*$ 9,420.80*	*$ 286,700.00*						$	367,597
	1.4.4.8.2	RCB_Lab	RCB_M&S	Racks/Crates/Backplanes	Includes AC power management, safety interlocks	*$ 94,720.00*	$ 10,000.00	*$ 55,680.00*	*$ 275,964.00*						$	436,364
	1.4.4.8.3	Cool_Lab	Cool_M&S	Cooling	Rack and crate tooling	$ 50,560.00	$ 1,000.00	*$ 12,249.60*	*$ 58,560.00*						$	122,370
	1.4.4.9	Inst_Lab	Inst_M&S	Installation	Move racks to site and do electronics install			*$ 277,680.00*	*$ 196,224.00*	$ 122,640	$ 73,584	$ 173,550	$ 104,130	**$ 473,904**		
							Per Channel Costs			55.625				**$ 5,987,917**		
						$ 53.51	$ 15.60	$ 22.79	$ 113.28							
						$	69.11	$	136.06							

Notes: All numbers above are links to tabs below.
Each WBS level 4 (or level 5 in a few cases) has it's own pair of tabs, one for Labor and one for M&S

$ 205.18

$ 205

Total PMTs per cavern	29184
Channels per board	16
Boards per crate	16
Crates per rack	2
Racks per hut	8
Channels per analog ASIC	4
Channels per discriminator ASIC	4
Total Caverns	2

57

Channels per crate	256	First-level switches (16+1 ports) required	114
Channels per rack	512	Second-level switches (48 port) required	5
Channels per hut	4096	Third-level switches (48 port) required	5
Huts required	*8*		
Racks required	*57*		
Crates required	*114*	119 with spares	
Boards required	*1824*	1916 with spares	
Channels required	*29184*	30644 with spares	
Analog ASICs required	7296	9120 with spares	
Discriminator ASICs required	7296	9120 with spares	
Percent spare ASICS	25%		
Percent spare boards	5%		
Percent spare components	10%		
Percent spare crates	4%	**These are not all properly used yet**	
Working hours per day	6.5		
Minutes per man-day	390		
Working hours per man-year	1780	From Rick VB	
Clock fanouts required	67		

	LBNE Water Cherenkov Detector **BASIS of ESTIMATE FORM (BoE)**	**Date of Estimate:** **Revision #: 8/17/11** **Prepared By: R. Van Berg** **Approved By:** **Level 2 Manager**

WBS Number: **130.04.04.02**	**WBS Title:** **Electrical Design/Characterization Cables and Bases**

WBS Dictionary:

This task covers preliminary characterization and final electrical design of bases for the selected PMT plus electrical characterization of PMT cables. The production costs for bases and cables are under 1.4.3.

Cost Type **(check all that apply):** _X_ EDIA Material _X_ EDIA Labor ___ MFG Material ___ MFG Labor	**Costing Method** **(check all that apply):** _X_ Engineering Judgment ___Physicist Estimate ___ Level of Effort ___ Vendor Quote (attached) ___ Catalog Price (specify) ___ Prior purchase _X_ Prior experience ___ Parametric Estimate ___ Other- Description:_____

Attach Relevant Documents (including but not limited to):

M&S Contingency (%)**: 11%**	**Labor Contingency** (%)**: 28%**

Basis of Estimate
Details of Estimate: 1.04.04.02.01 Characterization of cables – electrical characterization of candidate waterproof cable for the PMTs. The selected cable will be a compromise between cost, mechanical properties (e.g. waterproofing) and electrical characteristics. The work here is the detailed electrical characterization (attenuation, impedance, dispersion, cross talk, etc.) of a candidate cable. The labor is student and technician labor to do the measurements on the prototype cable. It is assumed that the prototype will be sufficiently successful to allow procurement without a second prototype run. A pre-production run and qualification thereof would be part of the production procurement process. Under S4 funding we have already characterized a standard, non-waterproof, single shield RG-59 cable and shown that while attenuation and dispersion are significant but tolerable over lengths of 100m, cross-talk for close packed cables over that length is very large and so multiple levels of shielding (and maybe increased cable to cable spacing) are clearly indicated. The same cable used for electrical tests can and will be used for prototype mechanical and installation tests and so mechanical properties are an important input to the prototype cable. 1.04.04.02.02 Design of PMT base(s) – design and fabrication of test bases for prototype PMTs and then the design of the final base circuit board to be used in the production PMT Assemblies. Given that a 10” base has been designed and prototyped under the S4 program, this leaves an 11” and 12” design from two different vendors, variations using Zener diodes to support the K-D1 voltages plus a possible tweak of the design used for the selected PMT in order to create a final design compatible with the mechanical constraints and mass assembly requirements. The pcb design effort is estimated from the design effort needed for the first test base and previous similar work. Material Details The cable material cost is the estimate for a dedicated run of a candidate cable from a commercial vendor – this is based upon experience from a similar effort for SNO. The pcb cost is based upon the cost of that first base purchased under the S4 program. The material cost also included SHV connectors used for the test bases. It is assumed that the number of individual PMTs of any given type is small enough that automated assembly is not required for these test bases. Equipment for the cable measurements already exists at the institutions doing the work. Capital equipment for LBNE work is only listed in these budget sheets if that piece of equipment is a permanent project asset. Contingency & Method Contingency was estimated using the standard LBNE methodology, no unusual aspects to these tasks.

Assumptions/Interfaces
Tightly tied to PMT selection and qualification process and to the PMT test and PA assembly process. These bases will be used for the qualification tests, different versions for each PMT type. The final physical form of the base must be compatible with the final physical form of the water tight housing that encloses the rear of the PMT. There is a secondary interface to the water group as the power dissipated in the base must be removed from the water (along with all the other heat flowing into the water).

The electrical cable characterization ties in with the installation of cables (mass, stiffness, location….) and the installation process for the PMT Assemblies which include the cable.

Constraints
No unusual constraints – normal power, space, performance.

Comments

130.04.04.02 Electrical Design/Characterization Cables and Bases

WBS LEVEL 5	ACTIVITY ID	ACTIVITY DESCRIPTION	START DATE	FINISH DATE	DURATION	RESOURCE	HOURS	COST	TOTAL with Escalation
130.04.04.02.01 Characterizatio	EL1440	Characterization of cables	10/25/2012	6/5/2014	400	BNL M&S CE from UN: Materials & Services		30,000	32,000
						BNL M&S CE from UN: Sr. Electrical Engineer	24	2,688	2,820
						BNL M&S CE from UN: Non Sr. Electrical Engineer	32	3,072	3,223
		Characterization of cables Total					56	35,760	38,043
130.04.04.02.01 Characterization of PMT Total							**56**	**35,760**	**38,043**
130.04.04.02.02 Characterizatio	EL1470	Electrical Design of Base - Version 1 des	1/11/2010	6/2/2010	100	BNL M&S CE from UN: Electronics Technician	48	2,688	2,688
						BNL M&S CE from UN: Materials & Services		1,500	1,500
						BNL M&S CE from UN: Non Sr. Electrical Engineer	8	768	768
		Electrical Design of Base - Version 1 design, fab, Total					56	4,956	4,956
	EL1480	Electrical Design of Base - Version 2 des	6/25/2012	2/1/2013	150	BNL M&S CE from UN: Electronics Technician	32	1,764	1,826
						BNL M&S CE from UN: Materials & Services		1,500	1,563
						BNL M&S CE from UN: Non Sr. Electrical Engineer	8	720	745
		Electrical Design of Base - Version 2 design, fab, Total					39	3,984	4,134
	EL1490	Electrical Design of Base - Version 3 des	12/30/2013	5/21/2014	100	BNL M&S CE from UN: Electronics Technician	32	1,792	1,909
						BNL M&S CE from UN: Materials & Services		1,500	1,625
						BNL M&S CE from UN: Non Sr. Electrical Engineer	8	768	818
		Electrical Design of Base - Version 3 design, fab, Total					40	4,060	4,352
130.04.04.02.02 Characterization of Cables Total							**135**	**13,000**	**13,442**
Grand Total							**191**	**48,760**	**51,485**

Labor Details for Electrical Design and Characterization of Cables and Bases (1.4.4.2)

Labor			Labor in man-days						Labor					
WBS	Task		Total m-days	Sr Eng m-days	P Doc m-days	Jr Eng m-days	E Tech m-days		Total	Design	Mfg			
1.4.4.2	Electrical Design/Characterization Cables and Bases		**14**						***$ 14,336.00***	***$ 14,336.00***	***$ -***	34500	48836	2400
1.4.4.2.1	Characterization of PMT		0						$ -	$ -		0		
1.4.4.2.2	Characterization of cables		7	3		*4*		Purchase of sample cable	*$ 5,760.00*	**$ 5,760.00**		30000	$ 35,760.00	
1.4.4.2.3	Electrical Design of Base		2				2		*$ 896.00*	**$ 896.00**		0		
1.4.4.2.3.1	Version 1 design, fab, test		5			*1*	*4*		*$ 2,560.00*	**$ 2,560.00**		1500	$ 4,956.00	
1.4.4.2.3.2	Version 2 design, fab, test		5			1	*4*		*$ 2,560.00*	**$ 2,560.00**		1500	$ 4,060.00	
1.4.4.2.3.3	Version 3 design, fab, test		5			*1*	*4*		*$ 2,560.00*	**$ 2,560.00**		1500	$ 4,060.00	
	Total MD			*3*	*0*	*7*	*14*		*24*					
	Hourly Rate			*$ 112.00*	*$ 48.00*	*$ 96.00*	*$ 56.00*							
	Total $			*$ 2,688*	*$ -*	*$ 5,376*	*$ 6,272*		*$ 14,336*					

Materials Detail f

Material Details for PMT Base and Cable Characterization

(Note that base and cable production are under the PMT WBS)

WBS	Task	Quan	Each	Total		Design		Mfg
1.4.4.2	Electrical Design/Characterization Cables and Bases			***$34,500.00***		***$34,500.00***	***$***	-
1.4.4.2.1	Characterization of PMT			*$0.00*		$0.00		
1.4.4.2.2	Characterization of cables	1	$30,000.00	*$30,000.00*	Purchase of sample custom waterproof cable	$30,000.00		
1.4.4.2.3	Electrical Design of Base		$0.00	*$0.00*		$0.00		
1.4.4.2.3.1	Version 1 design, fab, test	1	$1,500.00	*$1,500.00*	PCB + parts - based on R7081 base cost	$1,500.00		
1.4.4.2.3.2	Version 2 design, fab, test	1	$1,500.00	*$1,500.00*		$1,500.00		
1.4.4.2.3.3	Version 3 design, fab, test	1	$1,500.00	*$1,500.00*		$1,500.00		

	LBNE Water Cherenkov Detector **BASIS of ESTIMATE FORM (BoE)**	**Date of Estimate: 8/22/11** **Revision #:** **Prepared By: R. Van Berg** **Approved By:** **Level 2 Manager**

WBS Number: **1.04.04.03**	**WBS Title:** **High Voltage**

WBS Dictionary:

This task covers the conceptual design, prototyping, and production of the High Voltage board.

Cost Type **(check all that apply):** _X_ EDIA Material _X_ EDIA Labor _X_ MFG Material _X_ MFG Labor	**Costing Method** **(check all that apply):** _X_ Engineering Judgment ___Physicist Estimate ___ Level of Effort _X_ Vendor Quote (attached) – See Electronics Cost Estimate Spreadsheet for details _X_ Catalog Price (specify) _X_ Prior purchase _X_ Prior experience _X_ Parametric Estimate ___ Other- Description:_____

Attach Relevant Documents (including but not limited to): ElectronicsCostEstimate_v10_200kT.xlsx

M&S Contingency (%)**: 10%**	**Labor Contingency** (%)**: 20%**

Basis of Estimate
Details of Estimate: The High Voltage board is a relatively simple printed circuit with a small modular commercial DC-DC converter that provides the actual PMT HV. The design challenges are mechanical (to make a system that is easy to service while handling hundreds of stiff PMT cables entering from the rear of the crate) and, to a much lesser extent, electrical with HV decoupling, current and voltage readback and precision pulsers for each channel. The design is described in some detail in the CDR section 4.3. The cost estimate spreadsheet is ElectronicsCostEstimate, the HV board is detailed in the HV_Lab(or) and HV_M&S tabs. This same scheme applies to most of the subelements of WBS 1.04.0x except for the first (Management and Safety) – the spreadsheet has a Summary tab which gives the top level breakdown by WBS element in terms of both Labor and M&S and in terms of EDIA and Manufacturing (to allow easy parametric scaling for different numbers of PMTs). This Summary Tab also as direct links to the detailed tabs in columns C and D. The second tab is where the parameters are entered (e.g. number of PMTs, number of channels per crate, etc.), Following that there are pairs of color coordinated tabs for: Base_Lab(or); Base_M&S – PMT base and cable work HV_Lab; HV_M&S – HV card (this BOE element) FE_Lab; FE_M&S – Front End (including ASICs) ASICs - A special tab for ASIC costing Trig_Lab; Trig_M&S – Trigger and Clock distribution TDAQ_Lab; TDAQ_M&S – Trigger DAQ hardware and software LV_Lab; LV_M&S – Low voltage supplies RCB_Lab; RCB_M&S – Racks, Crates, Backplanes Cool_Lab; Cool_M&S – Cooling Mon_Lab; Mon_M&S – Monitoring Inst_Lab; Inst_M&S – Installation Rates – a tab with “generic” university rates used for labor PCBs – a tab showing the formula (and source) used to calculate bare pcb costs in quantity Notes – a tab with update history for the spreadsheet The estimate for this task is divided into conceptual design, design, prototype and production phases. Because the LBNE schedule is significantly stretched out in time and the electronics, in particular, benefit in terms of cost and capability from being designed and constructed near the actual need date, we have planned on a rather extended conceptual design stage which is largely dedicated to following other activities (PMT testing, conventional facilities, etc.) that could possibly strongly influence the final electronics design. The estimate of some tens of hours of effort per year for FY14-16 is largely level of effort for members of the electronics group following and understanding the implications of these other parts of the project. The engineering effort estimate is based upon the similar SNO board which took a graduate student about three months to design. A more professional crew would be significantly faster. Two rounds of prototyping are included in the plan to be conservative - for boards of this level of complexity one should be able to rely on a single prototype round. The manufacturing labor is board burn in and testing (board production and assembly would be done by industry) carried out by LBNE personnel - the estimate is based upon recent ATLAS and CMS experience. The average board test time is expected to be typically much less than the

average time indicated in the spreadsheet, but the (expected) small number of problem boards will doubtless need significantly more time for diagnosis and rework.

Material Details

The M&S estimates are based upon catalog prices of standard components plus an industry guided formula for estimating production quantity board production costs and recent experience in board assembly costs. The industry guided formula for pcb costs is shown in a separate tab in the ElectronicsCostEstimate spreadsheet and was derived from conversations with two separate industry contacts and then verified by a third contact. These numbers are "domestic" prices. Off-shore costs are estimated by our sources to be about a factor of two lower but we do not want to commit to such a strategy at this point.

Contingency & Method

Contingency was estimated using the standard LBNE methodology, no unusual aspects to these tasks.

Assumptions/Interfaces
Only “external” interface is to the PMT base so voltage and current specs must be met.

Constraints

Comments

130.04.04.03 High Voltage

WBS LEVEL 5	ACTIVITY ID	ACTIVITY DESCRIPTION	START DATE	FINISH DATE	DURATION	RESOURCE	HOURS	COST	TOTAL with Escalation
130.04.04.03 High Voltage	EL1520	High Voltage - Conceptual Design	6/6/2014	5/4/2018	1000	BNL M&S CE from UN: Sr. Electrical Engineer	80	8,960	10,115
						BNL M&S CE from UN: Non Sr. Electrical Engineer	80	7,680	8,670
		High Voltage - Conceptual Design Total					160	16,640	18,785
	EL1530	High Voltage - Design	5/7/2018	11/29/2019	410	BNL M&S CE from UN: PCB Layout Tech	160	15,350	18,609
						BNL M&S CE from UN: Sr. Electrical Engineer	103	11,480	13,917
						BNL M&S CE from UN: Non Sr. Electrical Engineer	119	11,414	13,837
		High Voltage - Design Total					381	38,245	46,363
	EL1540	High Voltage - Prototype and test	12/2/2019	12/4/2019	3	BNL M&S CE from UN: Electrical Technician	80	3,077	3,846
						BNL M&S CE from UN: Electronics Technician	23	1,294	1,617
						BNL M&S CE from UN: Materials & Services		18,000	22,874
						BNL M&S CE from UN: Sr. Electrical Engineer	80	8,961	11,201
						BNL M&S CE from UN: Non Sr. Electrical Engineer	105	10,079	12,599
		High Voltage - Prototype and test Total					288	41,411	52,138
	EL1560	High Voltage - Production-Material	1/1/2020	5/5/2021	350	BNL M&S CE from UN: Materials & Services		999,355	1,285,052
		High Voltage - Production-Material Total						999,355	1,285,052
	EL1561	High Voltage - Production-Labor	1/1/2020	5/5/2021	350	BNL M&S CE from UN: Electronics Technician	424	23,717	29,998
						BNL M&S CE from UN: Sr. Electrical Engineer	217	24,304	30,741
						BNL M&S CE from UN: Non Sr. Electrical Engineer	224	21,504	27,200
		High Voltage - Production-Labor Total					865	69,525	87,939
130.04.04.03 High Voltage Total							**1,694**	**1,165,175**	**1,490,276**
Grand Total							**1,694**	**1,165,175**	**1,490,276**

Labor Details for High Voltage (1.4.4.3)

Some notes: "min/ch" columns are minutes per channel, added to "tot md" (total man-days) column.

Labor						**Labor in man-days**											
WBS	**Task**	**Total**	**Sr Eng**		**Jr Eng**		**IC Des**	**Layout**	**M Tech**		**E Tech**			**Labor**			
		m-days	**m-days**	**m-days**	**min/ch**	**tot md**	**m-days**	**m-days**	**m-days**	**m-days**	**min/ch**	**tot md**		**Total**	**Design**		**Mfg**
1.4.4.3	**High Voltage**	**201**												***$ 145,088***	***$ 80,128***		***$ 64,960***
1.4.4.3.1	Conceptual Design	20	10	10		*10*						*0*		$ 16,640.00	$ 16,640.00		
1.4.4.3.2	Design																
	Connector module design	13	3	5		*5*		5				*0*		$ 10,368.00	$ 10,368.00		
	HV board design	35	10	10		*10*		15				*0*		$ 28,160.00	$ 28,160.00		
1.4.4.3.3	Prototype and test																
	HV Prototype I	20	5	10		*10*				5		*5*		$ 14,400.00	$ 14,400.00		
	HV Prototype II	15	5	5		*5*				5		*5*		$ 10,560.00	$ 10,560.00		
1.4.4.3.4	Production																
	CM (connector module) production					*0*						*0*		$ -			
	CM procure components	13	3	*5*		*5*				5		*5*		$ 8,768.00		$ 8,768.00	
	CM assembly	13	3	*5*		*5*				5		*5*		$ 8,768.00		$ 8,768.00	
	CM testing	10	5	5		*5*						*0*		$ 8,320.00		$ 8,320.00	
	HV board production																
	HV board procure components	8	3	5		*5*				5				$ 6,528.00		$ 6,528.00	
	HV board assembly	8	3	5		*5*				5				$ 6,528.00		$ 6,528.00	
	HV board testing	46	10		0.03	*3*				10	0.3	*33*		$ 26,048.00		$ 26,048.00	
	Total MD		*60*			*68*	*0*	*20*	*0*			*53*		*148*			
	Hourly Rate		*$ 112.00*			*$ 96.00*	*$ 96.00*	*$ 96.00*	*$ 64.00*			*$ 56.00*					$ 1,981,494.56
	Total $		*$ 53,760*			*$ 52,224*	*$ -*	*$ 15,360*	*$ -*			*$ 23,744*		*$ 145,088*			
	Total Hours		480	0	0	544	0	160	0	0		424					
	total hours EDIA	824	264	320	0	320	0	160	0	80		80					
	total hours Production	784	216	200	0.24	224	0	0	0	240		344					

Materials Detail for High Voltage (1.4.4.3)

WBS	Task	Quan	Each	Total		Design	Mfgr
1.4.4.3	**High Voltage**			***$ 886,723.28***		***$ 18,000.00***	***$ 876,723.28***
1.4.4.3.1	Conceptual Design						
1.4.4.3.2	Design						
	Connector module design			*$0.00*		$ -	
	HV board design			*$0.00*		$ -	
1.4.4.3.3	Prototype and test						
	HV Prototype I	1	$5,000.00	*$5,000.00*	Prototype PCBs and parts	$ *9,000.00*	
	HV Prototype II	1	$5,000	*$5,000.00*	Prototype PCBs and parts	$ *9,000.00*	
1.4.4.3.4	Production						
	CM (connector module) production						
	CM procure components	1916	$136.70	*$261,917.20*			$ *261,917.20*
	CM assembly and shipping	1916	$15	*$28,740.00*	Added in V9.0 (was missing)		$ *28,740.00*
	CM testing			*$0.00*			$ -
	HV board production						
	HV board procure components	1916	$270.88	*$519,006.08*			$ *519,006.08*
	HV board assembly and shipping	1916	$35	*$67,060.00*	Added in V9.0 (was missing)		$ *67,060.00*
	HV board testing			*$0.00*			$ -

Bill of Materials - connector module

Item	Quan	Each	Total	Notes
Kings 1704-1 SHV chassis	16	$6.20	*$99.20*	Newark @ 10k
Kings 1705-1 SHV cable	0	$11.57	*$0.00*	Newark @ 10k - Move to PMT WBS!
Some sort of 32 pin HV connector	1	$20.00	*$20.00*	Wild guess
Two layer PCB 25 in^2	1	$ 12.50	*$12.50*	Formula below
Rear panel aluminum w/ hardware	1	$5	*$5.00*	Wild guess
			$136.70	**Total for connector module**

Bill of Materials - HV board

Item	Quan	Each	Total	Notes
0.1 uF 2kV ceramic cap	16	$ 2.05	*$32.80*	Newark @ 1k
Some sort of 32 pin HV b-b connector	1	$ 20.00	*$20.00*	Wild guess
board-to-board header to signal board	1	$ 10.00	*$10.00*	Wild guess
Pico 12VV2 2kV @ 4mA DC/DC converter	1	$90	*$90.00*	Telephone quote 5/18/10 @ 1000
Microcontroller I2C	1	$ 5.00	*$5.00*	Wild guess
DAC I2C 16 output	2	$ 2.50	*$5.00*	Wild guess
ADC I2C 16 input	2	$ 2.50	*$5.00*	Wild guess
PCB cost see below	1	$ 45.00	*$45.00*	Formula below
LR8N3 400V adj regulator	16	$ 0.53	*$8.48*	Mouser @ 1000 pc
Digital pot	16	$ 0.60	*$9.60*	Mouser @ 100 pc
Op-amp etc per channel	16	$ 2.50	*$40.00*	Wild guess
			$270.88	**Total for HV board**

Note: Newark and Mouser are major electronics parts distributors.

PCB Parameters to fit 24x18 panel	Inches	Per panel
Conn board height	12	1
Conn board width	3	6
Conn board total per panel		6
Conn board cost for 2 layers		$ 12.50
HV board height	17	1
HV board width	6	3
HV board count per panel		3
HV board cost for n layers	6	$ 45.00

Volume PCB Costs - per S. Kjellman at Multek 5/2010
$10 per layer for 24 x 18 inch panel in 1000's

Alternative information from John Johnson at Electrotek 5/2010, agreed to as plausible by Elizabeth Foradori at Omnipwb
Per panel (size not specified) for US domestic production (China may be half)

Layers	Price	per layer
2	$75	$37.50
4	$95	$23.75
6	$140	$23.33
8	$180	$22.50
10	$220	$22.00

So, we use the following (named; used elsewhere)

$75	per panel for 2 layer
$22.50	per layer for multilayer

	LBNE Water Cherenkov Detector **BASIS of ESTIMATE FORM (BoE)**	**Date of Estimate: 8/22/11** **Revision #:** **Prepared By: R. Van Berg** **Approved By:** **Level 2 Manager**

WBS Number: **130.04.04.04**	**WBS Title:** **Front End Elect.**

WBS Dictionary:

This task covers the conceptual design, prototyping, and production of the Front End electronics board and the associated custom ASICs.

Cost Type **(check all that apply):** _X_ EDIA Material _X_ EDIA Labor _X_ MFG Material _X_ MFG Labor	**Costing Method** **(check all that apply):** _X_ Engineering Judgment ___Physicist Estimate ___ Level of Effort ___ Vendor Quote (attached) _X_ Catalog Price (specify) _X_ Prior purchase _X_ Prior experience _X_ Parametric Estimate ___ Other- Description:_____

Attach Relevant Documents (including but not limited to): ElectronicsCostEstimate_v10_200kT.xlsx

M&S Contingency (%)**: 10%**	**Labor Contingency** (%)**: 24%**

Basis of Estimate
Details of Estimate: The Front End (described in the WCD CDR section 4.4) includes, in the reference design, two separate custom ASICs plus firmware for an FPGA and the design of a complex printed circuit board. Almost all the intellectual content lies in the architecture of the ASIC designs. The FPGA firmware is relatively straightforward data collection coupled with an Ethernet driver. Both Super Kamiokande and SNO+ have had direct experience in the data collection task and SNO+ has direct experience in creating the Ethernet link. The printed circuit is demanding because of the mixed analog digital nature of the design and the requirements for low cross talk and precision receipt and termination of the relatively small PMT pulses coupled with the requirements of modern high speed FPGA connection and powering, but the average areal density is expected to be low and the detailed challenges well within the capabilities of the HEP community. The ASIC design and test estimates are based upon recent ATLAS and ATLAS upgrade experience and allow, conservatively, for two full rounds of prototyping before production. The printed circuit and FPGA design efforts are based upon recent ATLAS, CMS, SNO+ and LSST experiences and are consistent with the SNO effort undertaken by inexperienced designers. Material Details The M&S costs for the ASICs are based upon two multiproject wafer runs (MPW) in a target 0.35 um BiCMOS process that would be a good candidate process were the design to begin today and a process we have some familiarity with. The production costs are based on a recent IN2P3 order in that process and assume, very conservatively, that we will not be able to design both ASICs to fit into a single reticle (and thus requiring the purchase of two separate mask sets). See the ASICs tab of the ElectronicsCostEstimate spreadsheet for details and the calculation. It should be noted that the ASIC costing model involves two multi-project wafer (MPW) runs followed by production for each of the two designs. In this model we assume the need for one revision step - i.e. get the design nearly right in the first MPW run followed by a successful tweak in the second MPW run which then provides the design files for the masks for the dedicated production run. This model is somewhat conservative in that recent Penn experience with new designs is for first time success with the notable exception of the ASDBLR for the ATLAS TRT where the first version demonstrated an error in the vendors SPICE model (an unaccounted for substrate capacitance) - an error that was found in the first version fabrication and where the correct SPICE parameters were then extracted at Penn and the second version was the production device. However, the DTMROC (two different versions, also ATLAS TRT), the LAr shaping amplifier (ATLAS upgrade), the various GlueX chips, and the rather older SNOD and SNOINT and ASD8B were first time successes - arguably due to the emphasis on exhaustive detailed simulation, especially of the extracted net lists prior to fabrication. The M&S costs for the boards are, again, based upon our pcb cost formula coupled with catalog prices on some common but relatively expensive components plus engineering estimates for the remainder. Contingency & Method The standard method was used and no special allowance was made for the currency conversion risk

associated with using a European foundry. There are US based vendors available with somewhat less technically attractive processes that could be used to mitigate the currency risk and the ASIC costs are a relatively small component of the total Front End cost.

Assumptions/Interfaces

The “external” interfaces are to the PMT signal and the cable impedance (and dispersion).

Constraints

Comments

130.04.04.04 Front End Elect.

WBS LEVEL 5	ACTIVITY ID	ACTIVITY DESCRIPTION	START DATE	FINISH DATE	DURATION	RESOURCE	HOURS	COST	TOTAL with Escalation
130.04.04.04.01 Integrated Circuit	EL1580	Front End Elect. - Conceptual Design	6/6/2014	10/29/2015	350	BNL M&S CE from UN: Integrated Circuit Designer	124	15,456	16,833
						BNL M&S CE from UN: Sr. Electrical Engineer	399	44,688	48,671
						BNL M&S CE from UN: Non Sr. Electrical Engineer	242	23,184	25,250
						BNL M&S CE from UN: Printed Circuit Designer	37		
		Front End Elect. - Conceptual Design Total					802	83,328	90,754
	EL1600	Front End Elect - Integrated Circuit - De	9/25/2015	5/3/2016	152	BNL M&S CE from UN: Integrated Circuit Designer	1,240	119,071	133,672
						BNL M&S CE from UN: Sr. Electrical Engineer	640	71,671	80,460
		Front End Elect - Integrated Circuit - Design - v1 Total					1,880	190,742	214,132
	EL1620	Front End Elect - Integrated Circuit - Pr	5/18/2016	8/31/2016	76	BNL M&S CE from UN: Materials & Services		45,000	51,408
						BNL M&S CE from UN: Sr. Electrical Engineer	48	5,363	6,025
		Front End Elect - Integrated Circuit - Prototype - Total					48	50,363	57,434
	EL1630	Front End Elect - Integrated Circuit - Te	9/1/2016	1/20/2017	102	BNL M&S CE from UN: Electrical Technician	320	12,318	14,130
						BNL M&S CE from UN: Materials & Services		16,000	18,660
						BNL M&S CE from UN: Sr. Electrical Engineer	80	8,911	10,221
						BNL M&S CE from UN: Non Sr. Electrical Engineer	240	23,011	26,395
		Front End Elect - Integrated Circuit - Test - v1 Total					640	60,240	69,406
	EL1640	Front End Elect - Integrated Circuit - De	1/23/2017	8/18/2017	150	BNL M&S CE from UN: Integrated Circuit Designer	480	46,080	53,172
						BNL M&S CE from UN: Sr. Electrical Engineer	161	17,976	20,743
		Front End Elect - Integrated Circuit - Design - v2 Total					641	64,056	73,914
	EL1650	Front End Elect - Integrated Circuit - Pr	8/21/2017	1/7/2019	361	BNL M&S CE from UN: Materials & Services		44,999	54,380
						BNL M&S CE from UN: Sr. Electrical Engineer	47	5,256	6,248
		Front End Elect - Integrated Circuit - Prototype - Total					47	50,255	60,628
	EL1660	Front End Elect - Integrated Circuit - Te	1/8/2019	1/14/2019	5	BNL M&S CE from UN: Electronics Technician	360	20,160	24,537
						BNL M&S CE from UN: Materials & Services		9,600	11,879
						BNL M&S CE from UN: Sr. Electrical Engineer	80	8,961	10,907
						BNL M&S CE from UN: Non Sr. Electrical Engineer	160	15,359	18,693
		Front End Elect - Integrated Circuit - Test - v2 Total					600	54,080	66,016
	EL1680	Front End Elect - Integrated Circuit - Pr	1/14/2019	8/12/2019	150	BNL M&S CE from UN: Materials & Services		634,709	785,388
		Front End Elect - Integrated Circuit - Production- Total						634,709	785,388
	EL1790	Front End Elect - Integrated Circuit - Pr	1/14/2019	8/12/2019	150	BNL M&S CE from UN: Electronics Technician	784	43,931	53,469
						BNL M&S CE from UN: Integrated Circuit Designer	160	15,407	18,752
						BNL M&S CE from UN: Sr. Electrical Engineer	80	8,905	10,838
		Front End Elect - Integrated Circuit - Production- Total					1,024	68,244	83,059

130.04.04.04.01 Integrated Circuit Total							**5,681**	**1,256,015**	**1,500,731**
130.04.04.04.02 Printed Circuit	EL1700	Front End Elect - Printed Circuit - Conce	1/11/2010	6/1/2012	600	BNL M&S CE from UN: Sr. Electrical Engineer	240	26,880	27,420
						BNL M&S CE from UN: Travel		55,998	56,414
						BNL M&S CE from UN: Non Sr. Electrical Engineer	240	23,040	23,503
		Front End Elect - Printed Circuit - Conceptual Des Total					480	105,918	107,336
	EL1710	Front End Elect - Printed Circuit - Desig	8/20/2015	12/8/2015	75	BNL M&S CE from UN: PCB Layout Tech	240	23,040	25,616
						BNL M&S CE from UN: Sr. Electrical Engineer	80	8,988	9,993
						BNL M&S CE from UN: Non Sr. Electrical Engineer	160	15,336	17,051
		Front End Elect - Printed Circuit - Design - v1 Total					480	47,364	52,659
	EL1720	Front End Elect - Printed Circuit - Proto	12/9/2015	2/19/2016	50	BNL M&S CE from UN: Materials & Services		13,920	15,902
						BNL M&S CE from UN: Sr. Electrical Engineer	16	1,792	2,013
		Front End Elect - Printed Circuit - Prototype - v1 Total					16	15,712	17,916
	EL1730	Front End Elect - Printed Circuit - Test -	2/22/2016	6/3/2016	75	BNL M&S CE from UN: Electronics Technician	240	13,440	15,101
						BNL M&S CE from UN: Materials & Services		10,000	11,424
						BNL M&S CE from UN: Sr. Electrical Engineer	40	4,452	5,002
						BNL M&S CE from UN: Non Sr. Electrical Engineer	80	7,704	8,656
		Front End Elect - Printed Circuit - Test - v1 Total					360	35,596	40,183
	EL1740	Front End Elect - Printed Circuit - Desig	12/17/2018	2/25/2019	50	BNL M&S CE from UN: PCB Layout Tech	160	15,360	18,695
						BNL M&S CE from UN: Sr. Electrical Engineer	40	4,480	5,453
						BNL M&S CE from UN: Non Sr. Electrical Engineer	80	7,680	9,347
		Front End Elect - Printed Circuit - Design - v2 Total					280	27,520	33,495
	EL1750	Front End Elect - Printed Circuit - Proto	2/25/2019	5/6/2019	50	BNL M&S CE from UN: Materials & Services		13,920	17,225
						BNL M&S CE from UN: Sr. Electrical Engineer	16	1,792	2,181
		Front End Elect - Printed Circuit - Prototype - v2 Total					16	15,712	19,406
	EL1760	Front End Elect - Printed Circuit - Test -	5/6/2019	9/23/2019	100	BNL M&S CE from UN: Electronics Technician	240	13,440	16,358
						BNL M&S CE from UN: Materials & Services		5,000	6,187
						BNL M&S CE from UN: Sr. Electrical Engineer	40	4,481	5,454
						BNL M&S CE from UN: Non Sr. Electrical Engineer	120	11,521	14,022
		Front End Elect - Printed Circuit - Test - v2 Total					400	34,442	42,021
	EL1780	Front End Elect - Printed Circuit - Produ	9/23/2019	6/29/2020	200	BNL M&S CE from UN: Electronics Technician	760	42,560	53,156
						BNL M&S CE from UN: Sr. Electrical Engineer	40	4,480	5,595
						BNL M&S CE from UN: Non Sr. Electrical Engineer	80	7,681	9,593
		Front End Elect - Printed Circuit - Production-Lab Total					880	54,721	68,344
	EL1830	Front End Elect - Printed Circuit - Produ	9/23/2019	6/29/2020	200	BNL M&S CE from UN: Materials & Services		760,032	965,047
		Front End Elect - Printed Circuit - Production-Mat Total						760,032	965,047
130.04.04.04.02 Printed Circuit Total							**2,912**	**1,097,017**	**1,346,407**
130.04.04.04.03 Integrated System Tests	EL1800	Front End Elect - Integrated System Tes	6/6/2016	10/21/2016	100	BNL M&S CE from UN: Electronics Technician	320	17,920	20,211
						BNL M&S CE from UN: Materials & Services		40,000	45,868
						BNL M&S CE from UN: Sr. Electrical Engineer	80	8,960	10,105

130.04.04.04.03 Integrated System Tests	EL1800	Front End Elect - Integrated System Tes	6/6/2016	10/21/2016	100	BNL M&S CE from UN: Non Sr. Electrical Engineer	240	23,040	25,985
		Front End Elect - Integrated System Test - V1 Total					640	89,920	102,170
	EL1820	Front End Elect - Integrated System Tes	12/5/2016	4/21/2017	100	BNL M&S CE Costs		16,000	18,771
						BNL M&S CE from UN: Electronics Technician	320	17,920	20,678
						BNL M&S CE from UN: Sr. Electrical Engineer	80	8,960	10,339
						BNL M&S CE from UN: Non Sr. Electrical Engineer	200	19,200	22,155
		Front End Elect - Integrated System Test - V2 Total					600	62,080	71,943
130.04.04.04.03 Integrated System Tests Total							**1,240**	**152,000**	**174,113**
Grand Total							**9,833**	**2,505,032**	**3,021,252**

Labor Details for Front End (1.4.4.4) 3 **Slightly less wild -**

Labor WBS	Task	Total m-days	Sr Eng m-days	m-days	Jr Eng min/ch	tot md	IC Des m-days	Layout m-days	M Tech m-days	m-days	E Tech min/ch	tot md	Total	Labor Design	Mfg	Total Days			
			Labor in man-days																
1.4.4.4	**Front End Elect.**	***1229***											***$ 845,440.00***	***$ 722,496.00***	***$ 122,944.00***				
1.4.4.4.1	Conceptual Design	*100*	50	30		*30*	20					*0*	*$ 83,200.00*	*$ 83,200.00*		100		672.5	
1.4.4.4.2	Integrated Circuits															0			
1.4.4.4.2	Integrated Circuit - Analog ASIC															0		Both Ics together	
	Design - v1 Analog ASIC	*115*	40			*0*	75					*0*	*$ 93,440.00*	*$ 93,440.00*		115		$ 190,720.00	
	Prototype - v1 Analog ASIC	*3*	3			*0*						*0*	*$ 2,688.00*	*$ 2,688.00*		3		$ 5,376.00	$ 50,376.00
	Test - v1 Analog ASIC	*40*	10	10		*10*				20		*20*	*$ 25,600.00*	*$ 25,600.00*		40		$ 49,920.00	$ 65,920.00
	Design - v2 Analog ASIC	*40*	10			*0*	30					*0*	*$ 32,000.00*	*$ 32,000.00*		40		$ 64,000.00	
	Prototype - v2 Analog ASIC	*3*	3			*0*						*0*	*$ 2,688.00*	*$ 2,688.00*		3		$ 5,376.00	$ 50,376.00
	Test - v2 Analog ASIC	*40*	5	10		*10*				25		*25*	*$ 23,360.00*	*$ 23,360.00*		40		$ 44,480.00	$ 54,080.00
	Production - Analog ASIC	*64*	5		0	*0*	10			30	0.25	*49*	*$ 34,112.00*		$ 34,112.00	45.25		$ 136,448.00	$ 1,163,910.00
	Integrated Circuit - Discriminator ASIC															0			
	Design - v1 Discriminator ASIC	*120*	40			*0*	80					*0*	*$ 97,280.00*	*$ 97,280.00*		120			
	Prototype - v1 Discriminator ASIC	*3*	3			*0*						*0*	*$ 2,688.00*	*$ 2,688.00*		3			
	Test - v1 Discriminator ASIC	*40*		20		*20*				20		*20*	*$ 24,320.00*	*$ 24,320.00*		40			
	Design - v2 Discriminator ASIC	*40*	10			*0*	30					*0*	*$ 32,000.00*	*$ 32,000.00*		40			
	Prototype - v2 Discriminator ASIC	*3*	3			*0*						*0*	*$ 2,688.00*	*$ 2,688.00*		3			
	Test - v2 Discriminator ASIC	*35*	5	10		*10*				20		*20*	*$ 21,120.00*	*$ 21,120.00*		35			
	Production - Discriminator ASIC	*64*	5			*0*	10			30	0.25	*49*	*$ 34,112.00*		$ 34,112.00	45.25			
1.4.4.4.3	Printed Circuits - Readout board																		
1.4.4.4.3.1	Conceptual Design pcb	*60*	30	30		*30*						*0*	*$ 49,920.00*	*$ 49,920.00*		60	$ 49,920.00	445	
1.4.4.4.3.2	Design - v1 pcb	*60*	10	20		*20*		30				*0*	*$ 47,360.00*	*$ 47,360.00*		60	$ 47,360.00		
1.4.4.4.3.3	Prototype - v1 pcb	*2*	2			*0*						*0*	*$ 1,792.00*	*$ 1,792.00*		2	$ 15,712.00	13920	
1.4.4.4.3.4	Test - v1 pcb	*45*	5	10		*10*				30		*30*	*$ 25,600.00*	*$ 25,600.00*		45	$ 35,600.00	10000	
1.4.4.4.3.5	Design - v2 pcb	*35*	5	10		*10*		20				*0*	*$ 27,520.00*	*$ 27,520.00*		35	$ 27,520.00	0	
1.4.4.4.3.6	Prototype - v2 pcb	*2*	2			*0*						*0*	*$ 1,792.00*	*$ 1,792.00*		2	$ 15,712.00	13920	
1.4.4.4.3.7	Test - v2 pcb	*50*	5	15		*15*				30		*30*	*$ 29,440.00*	*$ 29,440.00*		50	$ 34,440.00	5000	
1.4.4.4.3.8	Production - pcb	*110*	5	10		*10*				20	1	*95*	*$ 54,720.00*		$ 54,720.00	36	$ 2,605,960.00		1216260
1.4.4.4.4	Integrated System Test	*0*	0	0												0			
1.4.4.4.4.1	V1 System Test	*80*	10	30		*30*				40		*40*	*$ 49,920.00*	*$ 49,920.00*		80	$ 101,920.00	40000	
1.4.4.4.4.2	V2 System Test	*75*	10	25		*25*				40		*40*	*$ 46,080.00*	*$ 46,080.00*		75	$ 74,080.00	16000	
																	travel	24000	32000
	Total Days		*276*			*230*	*255*	*50*	*0*			*418*	*811*						
	Hourly Rate		*$ 112.00*			*$ 96.00*	*$ 96.00*	*$ 96.00*	*$ 64.00*			*$ 56.00*							
	Total $		*$ 247,296*			*$ 176,640*	*$ 195,840*	*$ 38,400*	*$ -*			*$ 187,264*	***$ 845,440***						
	Total man hours	9832	2208			1840													
	EDIA man hours	7928	2088			1760	1880	400	0			1800							
	Mfg man hours	1904	120			80	160	0	0			1544							
		9832				1840													

Materials Detail for Front-End Electronics (1.4.4.4)

Pretty much everything on this page is a wild guess, esp the IC prices

WBS	Task	Quan	Each	Total	Notes	Design	Mfg	
1.4.4.4	**Front End Elect.**			***$ 1,501,798.00***		***$ 238,440.00***	***$ 1,328,958.00***	
1.4.4.4.1	Conceptual Design			$ -				
1.4.4.4.2	Integrated Circuits							
1.4.4.4.2	Integrated Circuit - Analog ASIC							
	Design - v1 Analog ASIC			$ -		$ -		
	Prototype - v1 Analog ASIC	1	$ 25,000.00	$ *25,000.00*	MPW run in 0.35 um AMS or equ. With packaging.	$ 25,000.00		
	Test - v1 Analog ASIC	1	$ 5,000.00	$ *5,000.00*	test station hardware / sofware	$ 8,000.00		
	Design - v2 Analog ASIC			$ -		$ -		
	Prototype - v2 Analog ASIC	1	$ 25,000.00	$ *25,000.00*		$ 25,000.00		
	Test - v2 Analog ASIC	1	$ 3,000.00	$ *3,000.00*	test station hardware / sofware changes	$ 4,800.00		
	Analog ASIC NRE (Masks)	1	$ 143,000.00	$ *143,000.00*			$ 143,000.00	$ 1,027,462.00
	Production - Analog ASIC	9120	$ 18.87	$ *172,095.00*	Wafers and packaging		$ 172,095.00	
	Integrated Circuit - Discriminator ASIC							
	Design - v1 Discriminator ASIC			$ -		$ -		
	Prototype - v1 Discriminator ASIC	1	$ 20,000.00	$ *20,000.00*		$ 20,000.00		
	Test - v1 Discriminator ASIC	1	$ 5,000.00	$ *5,000.00*		$ 8,000.00		$ 630,190.00
	Design - v2 Discriminator ASIC			$ -		$ -		
	Prototype - v2 Discriminator ASIC	1	$ 20,000.00	$ *20,000.00*		$ 20,000.00		
	Test - v2 Discriminator ASIC	1	$ 3,000.00	$ *3,000.00*		$ 4,800.00		
	Discriminator ASIC NRE (Masks)	1	$ 143,000.00	$ *143,000.00*			$ 143,000.00	
	Production - Discriminator ASIC	9120	$ 18.87	$ *172,095.00*			$ 172,095.00	
1.4.4.4.3	Printed Circuits - Readout board							
1.4.4.4.3.1	Conceptual Design pcb			$ -		$ -		
1.4.4.4.3.2	Design - v1 pcb			$ -		$ -		
1.4.4.4.3.3	Prototype - v1 pcb	40	$ 348.00	$ *13,920.00*	really only need ~ ten but per piece costs much more for singles	$ 13,920.00		
1.4.4.4.3.4	Test - v1 pcb	1	$ 10,000.00	$ *10,000.00*	board test station hardware	$ 10,000.00		
1.4.4.4.3.5	Design - v2 pcb			$ -		$ -		
1.4.4.4.3.6	Prototype - v2 pcb	40	$ 348.00	$ *13,920.00*		$ 13,920.00		
1.4.4.4.3.7	Test - v2 pcb	1	$ 5,000.00	$ *5,000.00*	upgrades to test station	$ 5,000.00		
1.4.4.4.3.8	Production - pcb	1916	$ 348.00	$ *666,768.00*			$ 666,768.00	
1.4.4.4.4	Integrated System Test							
1.4.4.4.4.1	V1 System Test	2	$ 20,000.00	$ *40,000.00*	system test station hardware / software	$ 40,000.00		
1.4.4.4.4.2	V2 System Test	2	$ 8,000.00	$ *16,000.00*	upgrades to above	$ 16,000.00		
	Travel for front end					$ 24,000.00	$ 32,000.00	

Bill of Materials - readout board (excluding ASICs)

Item	Quan	Each	Total	Notes	
PCB 8 layer 9U x 160mm	1	$ 75.00	$ *75.00*	Formula below	Note, NuHorizons Electronics is a distributor of Xilinx FPGAs and CPLDs
Voltage regulators and associated components	3	$5.00	$ *15.00*	3 voltages switching/linear regulators	
FPGA i.e XC6SLX16 (wild guess)	2	$ 20.00	$ *40.00*	NuHo @ 1	
Marvell 88E1111 10/100/1000 Ethernet PHY	1	$ 10.00	$ *10.00*	NuHo @ 1	
ADS8413 16-bit 2-MSPS LVDS serial ADC	4	$ 12.00	$ *48.00*	TI web @ 1000	Note TI is Texas Instruments, a major semiconductor vendor
8 bit microcontroller for I2C stuff	1	$ 10.00	$ *10.00*	Wild guess	
Front panel kit with hardware	1	$ 15.00	$ *15.00*	Wild guess	
Board assembly and shipping	1	$ 85.00	$ *85.00*		
Other components we haven't thought of	1	$ 50.00	$ *50.00*		
			$ -		
			$ 348.00	**Total for one readout board w/o ASICs**	
			$ 21.75	per channel	

PCB Parameters to fit 24x18 panel	Inches	Per panel
FE board height	14.4	1
FE board width	6.3	3
FE board per panel		3
FE board cost for n layers	10	$ 75.00

	LBNE Water Cherenkov Detector **BASIS of ESTIMATE FORM (BoE)**	**Date of Estimate: 8/22/11** **Revision #:** **Prepared By: R. Van Berg** **Approved By:** **Level 2 Manager**

WBS Number: **130.04.04.05**	**WBS Title:** **Trigger**

WBS Dictionary:

This task covers the conceptual design, prototyping, and production of the hardware trigger and clock distribution tree system.

Cost Type **(check all that apply):** _X_ EDIA Material _X_ EDIA Labor _X_ MFG Material _X_ MFG Labor	**Costing Method** **(check all that apply):** _X_ Engineering Judgment ___Physicist Estimate ___ Level of Effort ___ Vendor Quote (attached) _X_ Catalog Price (specify) _X_ Prior purchase _X_ Prior experience _X_ Parametric Estimate ___ Other- Description:_____

Attach Relevant Documents (including but not limited to): ElectronicsCostEstimate_v10_200kT.xlsx

M&S Contingency (%)**: 10%**	**Labor Contingency** (%)**: 25%**

Basis of Estimate
Details of Estimate: See the ElectronicsCostEstimate spreadsheet, Trig_Lab and Trig_M&S tabs for details and backup information. While the primary LBNE trigger is the software based system, we have also included provision for a hardware trigger as a backup and diagnostic tool that is implemented in parallel with the clock which is required at each crate. The trigger and clock tree system feeds master clock and synch signals from a single central source to all crates using a simple LVDS distribution tree. At the same time and over the same board and cable plant each crate feeds back, to that central location, the NHIT (and maybe Energy) analog sums using a differential analog summing tree. The design is straightforward for both the digital and analog trees and so labor is estimated using experience with previous medium complexity systems in SNO, Super Kamiokande, ATLAS and CMS. In particular, we (at BU) have recently designed a similar clock/timing distribution system in the MicroTCA form factor for the CMS HCAL upgrade project, and produced a set of working prototypes which were used in a summer 2010 test beam effort at CERN. The level of effort required was consistent with that represented in the LBNE estimate. Material Details The M&S estimate is also based upon the same experience and the printed circuit estimating algorithm used elsewhere. Parts are estimated from either catalog prices or educated guesses from similar projects. We have added to the estimate a GPS-disciplined rubidium time/frequency standard with a remote GPS antenna option. We are assuming that there will be, in the facility, a suitable set of optical fiber connections from the surface to the experimental level. Contingency & Method . Contingency was estimated using the standard LBNE methodology, no unusual aspects to these tasks.

Assumptions/Interfaces

The external interface is to Computing – the Trigger and Clock are controlled through the operator console and provide monitoring information to that console.

Constraints

Comments

130.04.04.05 Trigger

WBS LEVEL 5	ACTIVITY ID	ACTIVITY DESCRIPTION	START DATE	FINISH DATE	DURATION	RESOURCE	HOURS	COST	TOTAL with Escalation
130.04.04.05 Trigger	EL1840	Trigger - Conceptual Design	1/11/2010	1/10/2013	750	BNL M&S CE from UN: Sr. Electrical Engineer	75	8,400	8,593
						BNL M&S CE from UN: Non Sr. Electrical Engineer	135	12,960	13,257
		Trigger - Conceptual Design Total					210	21,360	21,850
	EL1850	Trigger - Design	2/22/2016	9/1/2017	400	BNL M&S CE from UN: PCB Layout Tech	112	10,752	12,276
						BNL M&S CE from UN: Sr. Electrical Engineer	64	7,168	8,184
						BNL M&S CE from UN: Non Sr. Electrical Engineer	200	19,200	21,921
		Trigger - Design Total					376	37,120	42,380
	EL1860	Trigger - Prototype	9/4/2017	9/3/2018	261	BNL M&S CE from UN: Electronics Technician	360	20,170	23,853
						BNL M&S CE from UN: Materials & Services		18,001	21,644
						BNL M&S CE from UN: PCB Layout Tech	55	5,262	6,223
						BNL M&S CE from UN: Sr. Electrical Engineer	112	12,570	14,865
						BNL M&S CE from UN: Non Sr. Electrical Engineer	279	26,810	31,705
		Trigger - Prototype Total					806	82,813	98,289
	EL1880	Trigger - Production	6/29/2020	8/23/2021	300	BNL M&S CE from UN: Electronics Technician	294	16,464	21,010
						BNL M&S CE from UN: Materials & Services		63,402	82,251
						BNL M&S CE from UN: PCB Layout Tech	57	5,472	6,983
						BNL M&S CE from UN: Sr. Electrical Engineer	39	4,368	5,574
						BNL M&S CE from UN: Non Sr. Electrical Engineer	231	22,176	28,299
		Trigger - Production Total					621	111,882	144,116
130.04.04.05 Trigger Total							**2,013**	**253,175**	**306,636**
Grand Total							**2,013**	**253,175**	**306,636**

Labor Details for Hardware Trigger and Clock Distribution

This subsystem provides clock and fast controls fan-out and hardware trigger fan-in.
"min/mod" columns are minutes per module, added to "tot md" (total man-days) column.

Labor						Labor in man-days								Labor				
WBS	**Task**	**Total m-days**	**Sr Eng m-days**	**Jr Eng m-days**	**Jr Eng min/mod**	**tot md**	**IC Des m-days**	**Layout m-days**	**M Tech m-days**	**E Tech m-days**	**E Tech min/mod**	**tot md**		**Total**	**Design**	**Mfg**		
1.4.4.5	Hardware Trigger and Clock Distribution	**249.6**											***$***	***180,941***	**$ 112,640.00**	**$ 68,300.80**	0	
1.4.4.5.1	Conceptual Design - trigger	14	7	7		7						0	*$*	*11,648*	$ 11,648		0	$ 11,648
1.4.4.5.2	Design - trigger	27	5	15		15		7				0	*$*	*21,376*	$ 21,376		0	$ 21,376
1.4.4.5.3	Prototype - trigger	35	5	10		10				20		20	*$*	*21,120*	$ 21,120		9000	$ 39,120
1.4.4.5.4	Production - trigger	20	3	5		5		7		5		5	*$*	*14,144*		$ 14,144		$ 172,421
												0					41382	
	Conceptual Design - clock	12	2	10		10						0	*$*	*9,472*	$ 9,472		25192	
	Design - clock	20	3	10		10		7				0	*$*	*15,744*	$ 15,744		10985	
	Prototype - clock	29	2	10		10		7		10		10	*$*	*19,328*	$ 19,328			
	Production - clock	20.4	2	5		5				5	60	13.4	*$*	*11,635*		$ 11,635		
	Clock module Test Stand development	22	2	10		10				10		10	*$*	*13,952*	$ 13,952			
	Clock module production testing	50.2	2	10	120	26.8				20	10	21.4	*$*	*31,962*		$ 31,962		
	Central GPS/rubidium clock development		5	5		5				5		5	*$*	*10,560*		$ 10,560		
	Total MD		*38*			*113.8*	*0*	*28*	*0*			*84.8*						
	Hourly Rate		*$ 112.00*			*$ 96.00*	*$ 96.00*	*$ 96.00*	*$ 64.00*			*$ 56.00*						
	Total $		*$ 34,048*			*$ 87,398*	*$ -*	*$ 21,504*	*$ -*			*$ 37,990*	*$*	*180,941*				

Number of clock modules (from parameters page)	67
Total man hours	264 870.4 224 638.4
EDIA man hours	208 576 168 320
Mfg man hours	56 294.4 56 318.4

Materials Detail for Hardware Trigger and Clock Distribution

This subsystem provides clock and fast controls fan-out and hardware trigger fan-in

WBS	Task	Quan	Each	Total		Design	Mfg
1.4.4.5	**Hardware Trigger and Clock Distribution**			***$ 78,498.00***		***$ 18,000.00***	***$ 60,498.00***
1.4.4.5.1	Conceptual Design - clock/trigger			$ -		$ -	
1.4.4.5.2	Design - clock/trigger in-crate module			$ -		$ -	
	Design - clock/trigger central module			$ -		$ -	
1.4.4.5.3	Prototype - clock/trigger in-crate module	2	$ 4,500.00	*$ 9,000.00*	proto boards and parts, two cycles plus test parts	$ 9,000.00	
	Prototype - clock/trigger central module	2	$ 4,500.00	*$ 9,000.00*	proto boards and parts, two cycles plus test parts	$ 9,000.00	
1.4.4.5.4	Production - clock - in-crate module	67	$ 363.00	*$ 24,321.00*			$ 24,321.00
	Production - clock - central module	**8**	**$ 3,149.00**	*$ 25,192.00*			$ 25,192.00
	Central frequency time standard	1	$ 10,985.00	*$ 10,985.00*			$ 10,985.00

Bill of Materials - In-crate trigger/clock module

Item	Quan	Each	Total	Notes
PCB 6 layers 16 x 8 inches	1	$ 60.00	*$ 60.00*	Formula below
2x4 gang RJ-45 stacked jack Cat 5	1	$ 13.00	*$ 13.00*	Newark
8 output clock fanout LVDS IC	2	$ 10.00	*$ 20.00*	
FPGA	2	$ 20.00	*$ 40.00*	
Trigger summing electronics per ch	16	$ 5.00	*$ 80.00*	
1U rackmount enclosure	0	$ 50.00	$ -	Card in backplane - no enclosure/ps
Power supply	0	$ 50.00	$ -	
Board assembly and shipping	1	$ 100.00	*$ 100.00*	
Other components and hardware	1	$ 50.00	*$ 50.00*	
			$ 363.00	**Total for in-crate module**

PCB Parameters to fit 24x18 panel	Inches	Per panel
Board height	14.4	1
Board width	6.3	3
Boards per panel		3
Board cost for n layers	8	$ 60.00

Bill of Materials - Central trigger/clock module

Item	Quan	Each	Total	Notes
PCB 6 layers 16 x 8 inches	1	$ 2,595.00	*$ 2,595.00*	Formula below
2x4 gang RJ-45 stacked jack Cat 5	8	$ 13.00	*$ 104.00*	Newark
8 output clock fanout LVDS IC	8	$ 10.00	*$ 80.00*	
FPGA	2	$ 20.00	*$ 40.00*	
Trigger summing electronics per ch	16	$ 5.00	*$ 80.00*	
1U rackmount enclosure	1	$ 50.00	*$ 50.00*	
Power supply	1	$ 50.00	*$ 50.00*	
Board assembly and shipping	1	$ 100.00	*$ 100.00*	
Other components and hardware	1	$ 50.00	*$ 50.00*	
			$ 3,149.00	**Total for central module**

Bill of Materials - Commercial Frequency / Time standard

Item	Quan	Each	Total	Notes
Precision Test Systems GPS10-RBN	1	$ 7,895.00	*$ 7,895.00*	GPS disciplined rubidium atomic clock
Option 18 - Ethernet interface	1	$495	*$ 495.00*	
Option 35 - Fiber optic link for GPS antenna	1	$2,595	*$ 2,595.00*	Antenna up to 1km fiber link from unit
			$ 10,985.00	

	LBNE Water Cherenkov Detector **BASIS of ESTIMATE FORM (BoE)**	**Date of Estimate: 8/23/11** **Revision #:** **Prepared By: R. Van Berg** **Approved By:** **Level 2 Manager**

WBS Number: **130.04.04.06**	**WBS Title:** **DAQ**

WBS Dictionary:

This task covers the conceptual design, prototyping, and production of the DAQ hardware and software.

Cost Type **(check all that apply):** _X_ EDIA Material _X_ EDIA Labor _X_ MFG Material _X_ MFG Labor	**Costing Method** **(check all that apply):** _X_ Engineering Judgment ___Physicist Estimate ___ Level of Effort ___ Vendor Quote (attached) _X_ Catalog Price (specify) _X_ Prior purchase _X_ Prior experience _X_ Parametric Estimate ___ Other- Description:_____

Attach Relevant Documents (including but not limited to): ElectronicsCostEstimate_v10_200kT.xlsx

M&S Contingency (%)**: 10%**	**Labor Contingency** (%)**: 25%**

Basis of Estimate
Details of Estimate: The DAQ effort estimated here is not the On-Line system with complex user interfaces and run control but simply the low level libraries and routines needed to configure, test, and operate the electronics hardware. The estimate is based upon recent low level DAQ projects for ATLAS and Super Kamiokande but assumes some significant off-project contribution from collaboration students and post-docs in the design, production and commissioning phases. Much of the software will be directly reusable from the testing and prototyping work. Material Details M&S is based upon current catalog prices for the required commercial hardware. Since the hardware is standard processors, network switches and cables this section is almost certainly an over estimate for material procured five or more years in the future. The computers for the DAQ reside underground near the deck in their own racks - probably the same racks that contain the central clock source and the hardware trigger fan-in. Contingency & Method Contingency was estimated using the standard LBNE methodology, no unusual aspects to these tasks.

Assumptions/Interfaces

The main interface is to Computing – the baseline plan is to have DAQ write files to storage and then Computing picks them up from the same storage element.

Constraints

Comments

130.04.04.06 DAQ

WBS LEVEL 5	ACTIVITY ID	ACTIVITY DESCRIPTION	START DATE	FINISH DATE	DURATION	RESOURCE	HOURS	COST	TOTAL with Escalation
130.04.04.06 DAQ	EL1900	DAQ - Conceptual Design	1/11/2010	10/28/2014	1200	BNL M&S CE from UN: Post Doc	156	7,488	7,750
						BNL M&S CE from UN: Sr. Electrical Engineer	156	17,472	18,084
						BNL M&S CE from UN: Travel		9,600	9,945
		DAQ - Conceptual Design Total					312	34,560	35,780
	EL1910	DAQ - Design	10/29/2014	8/25/2016	459	BNL M&S CE from UN: Post Doc	482	23,134	25,651
						BNL M&S CE from UN: Sr. Electrical Engineer	161	17,993	19,951
						BNL M&S CE from UN: Travel		9,602	10,825
		DAQ - Design Total					643	50,729	56,427
	EL1920	DAQ - Prototype	8/26/2016	4/18/2018	429	BNL M&S CE from UN: Electrical Technician	82	3,135	3,644
						BNL M&S CE from UN: Materials & Services		25,002	29,546
						BNL M&S CE from UN: Post Doc	159	7,619	8,856
						BNL M&S CE from UN: Sr. Electrical Engineer	82	9,129	10,611
						BNL M&S CE from UN: Travel		11,999	14,180
		DAQ - Prototype Total					322	56,884	66,837
	EL1940	DAQ - Production	4/19/2018	8/5/2020	600	BNL M&S CE from UN: Electrical Technician	162	6,231	7,619
						BNL M&S CE from UN: Materials & Services		107,316	133,427
						BNL M&S CE from UN: Post Doc	282	13,536	16,554
						BNL M&S CE from UN: Sr. Electrical Engineer	78	8,736	10,683
						BNL M&S CE from UN: Travel		18,402	22,879
		DAQ - Production Total					522	154,221	191,163
130.04.04.06 DAQ Total							**1,798**	**296,393**	**350,207**
Grand Total							**1,798**	**296,393**	**350,207**

Materials Detail for DAQ (1.4.4.6) and Software Trigger

WBS	Task	Quan	Each	Total	Notes	Design	Mfg
1.4.4.6	DAQ (and software trigger)			***$ 126,907.00***		***$ 44,200.00***	***$ 132,307.00***
1.4.4.6.1	Conceptual Design - DAQ					$ -	
1.4.4.6.2	Design - DAQ					$ -	
1.4.4.6.3	Prototype - DAQ	1	$25,000	$ 25,000.00	20% scale test system	$ 25,000.00	
1.4.4.6.4	Production - DAQ	1	$ 101,907.00	$ 101,907.00			$ 101,907.00
	Travel					$ 19,200.00	$ 30,400.00

M&S for DAQ and software trigger

Item	Quan	Each	Total	Notes
16+1 port Gigabit Ethernet switches	114	$250	*$ 28,500.00*	Web price
48-port Gigabit Ethernet switches	10	$500	*$ 5,000.00*	Web price for Linksys 48 port GbE switch
DAQ computers	48	$1,000	*$ 48,000.00*	Eng. Est.
Desktop utility computers for commissioning, etc	4	$2,000	*$ 8,000.00*	Eng. Est.
1m Cat 5e patch cable	5000	$1	*$ 5,000.00*	Eng. Est.
1 ft Cat6 cable (100m from each rack to Trig/DAQ)	*34200*	$0.09	*$ 2,907.00*	Newark price for 50k feet in 1000' spools
Server-type racks for DAQ computers	3	$1,500	*$ 4,500.00*	
			$ 101,907.00	

Labor Details for DAQ (1.4.4.6) including Software Trigger

Labor			Labor in man-days					Labor					
WBS	Task	Total m-days	Sr Eng m-days	E Tech m-days	P Progr m-days	E Tech m-days		Total	Design	Mfg			
1.4.4.6	DAQ	**225**						***$ 119,040.00***	***$ 87,680.00***	***$ 31,360.00***		44200	162204	
1.4.4.6.1	Conceptu	40	20		*20*			*$ 25,600.00*	**$ 25,600.00**			0		
1.4.4.6.2	Design -	80	20		*60*			*$ 40,960.00*	**$ 40,960.00**			0		$ 50,560.00
1.4.4.6.3	Prototype	40	10		*20*	10		*$ 21,120.00*	**$ 21,120.00**			25000		$ 55,720.00
1.4.4.6.4	Productic	65	10		*35*	*20*		*$ 31,360.00*		**$ 31,360.00**			131804	$ 387,128.00
											Travel	19200	30400	
Total MD			*60*	*0*	*135*	*30*		*225*						
Hourly Rate			*$ 112.00*	*$ 56.00*	*$ 48.00*	*$ 56.00*								
Total $			*$ 53,760*	*$ -*	*$ 51,840*	*$ 13,440*		*$ 119,040*						
Total man hours		1800	480	0	1080	240								
EDIA man hours		1280	400	0	800	80								
Mfg man hours		520	80	0	280	160								

	LBNE Water Cherenkov Detector **BASIS of ESTIMATE FORM (BoE)**	**Date of Estimate: 8/23/11** **Revision #:** **Prepared By: R. Van Berg** **Approved By:** **Level 2 Manager**

WBS Number: **130.04.04.07**	**WBS Title:** **Monitoring and Control**

WBS Dictionary:

This task covers the conceptual design, prototyping, and production of the monitoring and control hardware and software.

Cost Type **(check all that apply):** _X_ EDIA Material _X_ EDIA Labor _X_ MFG Material _X_ MFG Labor	**Costing Method** **(check all that apply):** _X_ Engineering Judgment ___Physicist Estimate ___ Level of Effort ___ Vendor Quote (attached) _X_ Catalog Price (specify) _X_ Prior purchase _X_ Prior experience _X_ Parametric Estimate ___ Other- Description:_____

Attach Relevant Documents (including but not limited to):

M&S Contingency (%)**: 10%**	**Labor Contingency** (%)**: 21%**

Basis of Estimate
Details of Estimate: The monitoring and control system for the electronics racks described in the reference design is based on directly copying the new Super Kamiokande hardware and software system and so time and material estimates are based on that recent experience - the designer and constructor of the SK system has provided these estimates. Material Details As noted, the materials costs were taken directly from the recent Super Kamiokande upgrade. Contingency & Method Contingency was estimated using the standard LBNE methodology, no unusual aspects to these tasks.

Assumptions/Interfaces

The main interface is to Computing to provide the user console for data provided by Monitoring & Control and to implement the control functions.

Constraints

Comments

130.04.04.07 Monitoring and Control

WBS LEVEL 5	ACTIVITY ID	ACTIVITY DESCRIPTION	START DATE	FINISH DATE	DURATION	RESOURCE	HOURS	COST	TOTAL with Escalation
130.04.04.07 Monitoring and Co	EL1960	Monitoring and Control - Conceptual D	1/11/2010	3/25/2013	800	BNL M&S CE from UN: Sr. Electrical Engineer	40	4,480	4,587
						BNL M&S CE from UN: Non Sr. Electrical Engineer	40	3,840	3,932
		Monitoring and Control - Conceptual Design Total					80	8,320	8,518
	EL1970	Monitoring and Control - Design	3/26/2013	4/28/2015	522	BNL M&S CE from UN: Sr. Electrical Engineer	42	4,677	4,986
						BNL M&S CE from UN: Non Sr. Electrical Engineer	78	7,517	8,013
		Monitoring and Control - Design Total					120	12,194	12,999
	EL1980	Monitoring and Control - Prototype	7/31/2017	5/4/2018	200	BNL M&S CE from UN: Electronics Technician	40	2,240	2,639
						BNL M&S CE from UN: Materials & Services		5,900	7,066
						BNL M&S CE from UN: Mechanical Technician	40	2,560	3,015
						BNL M&S CE from UN: Sr. Electrical Engineer	40	4,480	5,277
						BNL M&S CE from UN: Non Sr. Electrical Engineer	80	7,680	9,046
		Monitoring and Control - Prototype Total					200	22,860	27,043
	EL2000	Monitoring and Control - Production	5/7/2018	8/21/2020	600	BNL M&S CE from UN: Electronics Technician	138	7,728	9,461
						BNL M&S CE from UN: Materials & Services		101,778	126,676
						BNL M&S CE from UN: Mechanical Technician	42	2,688	3,291
						BNL M&S CE from UN: Sr. Electrical Engineer	42	4,704	5,759
						BNL M&S CE from UN: Non Sr. Electrical Engineer	96	9,216	11,282
		Monitoring and Control - Production Total					318	126,114	156,469
130.04.04.07 Monitoring and Control Total							**718**	**169,488**	**205,029**
Grand Total							**718**	**169,488**	**205,029**

Labor Details for Monitoring & Slow Controls

Labor below is a compromise… probably more than we need to duplicate the Super-K Sensoray™ system but not enough to design new component-level system from scratch.
We assume here that we fabricate our own boxes and assemble them in house with COTS boards.

Labor

WBS	Task	Total m-days	Sr Eng m-days	m-days	Jr Eng md/rack	tot md	IC Des m-days	Layout m-days	M Tech m-days	m-days	E Tech md/rack	tot md	Labor Total	Labor Design	Labor Mfg			
			Labor in man-days															
1.4.4.7	Monitoring and Control	**86.35**											***$ 59,837***	***$ 37,440***	***$ 22,397***			
1.4.4.7.1	Conceptual Design - monitor	10	5	5		5						0	$ 8,320.00	$ 8,320.00			0	$ 8,320.00
1.4.4.7.2	Design - monitor	15	5	10		10						0	$ 12,160.00	$ 12,160.00			0	$ 12,160.00
1.4.4.7.3	Prototype - monitor	25	5	10		10			5	5		5	$ 16,960.00	$ 16,960.00			5900	$ 22,860.00
1.4.4.7.4	Production - monitor	36.35	5	5	0.1	11.1			5		0.25	15.25	$ 22,396.80		$ 22,396.80		159300	$ 363,393.60
						0						0	$ -					
																95.2		
	Total MD		*20*			*36.1*	*0*	*0*	*10*			*20.25*				138	690.8	
	Hourly Rate		*$ 112.00*			*$ 96.00*	*$ 96.00*	*$ 96.00*	*$ 64.00*			*$ 56.00*						
	Total $		*$ 17,920*			*$ 27,725*	*$ -*	*$ -*	*$ 5,120*			*$ 9,072*						
	Total number of racks with spares		61															
	Total number of crates with spares		122															
	Total man hours	690.8	160			288.8			80			162						
	EDIA man hours	400	120			200			40			40						
	Mfg man hours	290.8	40			88.8			40			122						

Materials Detail for Monitoring & Slow Controls			Costs are directly taken from Jen for Super-K Sensoray™ hardware. For now we assume that if we designed our own that the production costs would be similar.							
	WBS	Task	Quan	Each	Total		Design	Mfg		
	1.4.4.7	Monitoring and Control			$ 95,875.00		$ 5,900.00	$ 89,975.00		
	1.4.4.7.1	Conceptual Design - monitor			$ -		$ -			
	1.4.4.7.2	Design - monitor			$ -		$ -			
	1.4.4.7.3	Prototype - monitor	4	$ 1,475.00	$ 5,900.00		$ 5,900.00			
	1.4.4.7.4	Production - monitor	61	$ 1,475.00	$ 89,975.00			$ 89,975.00		
					$ -					
					$ -					
Bill of Materials for Monitoring Unit (1 per rack)										
		Item	**Quan**	**Each**	**Total**	**Notes**				
		Sensoray #2601 Comms module	1	$400	$ 400.00		Costs from recent SuperKamiokande purchases			
		Sensoray #2608-0 16 channel ADC	1	$400	$ 400.00					
		Sensoray #2652 SSR module 8 ch	1	$200	$ 200.00					
		24V supply	1	$125	$ 125.00					
		Rack-mount box	1	$100	$ 100.00					
		Front-panel (front panel express)	1	$100	$ 100.00					
		Cables, hardware, etc	1	$50	$50.00					
		Microcontroller with I2C for fans	1	$100	$100.00					
					$ 1,475.00	**Total for one rack**				
		Total number of racks with spares	61							
		Total number of crates with spares	122							

	LBNE Water Cherenkov Detector **BASIS of ESTIMATE FORM (BoE)**	**Date of Estimate: 8/23/11** **Revision #:** **Prepared By: R. Van Berg** **Approved By:** **Level 2 Manager**

WBS Number:	**WBS Title:**
130.04.04.08	**Power/Racks/Cooling**

WBS Dictionary:

This task covers the conceptual design, prototyping, and production of the racks, the crates that go in those racks and the low voltage power supplies, cooling and backplanes for those crates.

Cost Type **(check all that apply):**	**Costing Method** **(check all that apply):**
_X_ EDIA Material _X_ EDIA Labor _X_ MFG Material _X_ MFG Labor	_X_ Engineering Judgment ___Physicist Estimate ___ Level of Effort ___ Vendor Quote (attached) _X_ Catalog Price (specify) _X_ Prior purchase _X_ Prior experience _X_ Parametric Estimate ___ Other- Description:_____

Attach Relevant Documents (including but not limited to): ElectronicsCostEstimate_v10_200kT.xlsx

M&S Contingency (%)**: 10%**	**Labor Contingency** (%)**: 23%**

Basis of Estimate
Details of Estimate: The ElectronicsCostEstimate spreadsheet has separate tabs for lower level WBS elements - Low Voltage supplies (LV), Racks Crates and Backplanes (RCB), and Cooling (Cool). The racks themselves are standard commercial relay racks with a normal complement of features including front and rear doors, the crates are custom designed for LBNE in consultation with a commercial vendor and manufactured by that vendor (as were, for instance, the SNO crates), the backplanes are a custom LBNE design, low voltage power is provided from commercial supplies and modules and cooling is provided, in the reference design, by commercial fan trays or blowers using cooled air from the dome or hut environment. Power supplies are run at some fraction of full load but the costs are estimated at the full deliverable power. We use $2/W which is fairly conservative for very large supplies but representative of medium power, high quality supplies with multiple outputs. Labor is estimated from prior experience with similar assemblies in Super Kamiokande, SNO, ATLAS, and CMS. The labor is dominated by the assembly effort required to put backplanes into crates, crates into racks and then install power supplies and cabling. Material Detail The M&S is based upon present catalog prices for the various pieces or estimates of custom objects based upon experience. The costs are dominated by low voltage power and the mechanical hardware for the crates and racks. The rack costs are based upon relatively small quantities obtained through a distributor and are, therefore, probably higher than could be obtained for the full LBNE quantities. Contingency & Method Contingency was estimated using the standard LBNE methodology, no unusual aspects to these tasks.

Assumptions/Interfaces

The main interface is to Installation and Civil Construction for location, input power and cooling.

Constraints

Comments

130.04.04.08 Power/Racks/Cooling

WBS LEVEL 5	ACTIVITY ID	ACTIVITY DESCRIPTION	START DATE	FINISH DATE	DURATION	RESOURCE	HOURS	COST	TOTAL with Escalation
130.04.04.08.01 Low Voltage Po	EL2040	Low Voltage Power - Conceptual Desigr	1/11/2010	12/15/2017	2000	BNL M&S CE from UN: Sr. Electrical Engineer	80	8,960	9,611
						BNL M&S CE from UN: Non Sr. Electrical Engineer	80	7,680	8,238
		Low Voltage Power - Conceptual Design Total					160	16,640	17,849
	EL2050	Low Voltage Power - Design	12/15/2017	12/14/2018	260	BNL M&S CE from UN: Sr. Electrical Engineer	81	9,027	10,758
						BNL M&S CE from UN: Non Sr. Electrical Engineer	161	15,474	18,441
		Low Voltage Power - Design Total					242	24,501	29,199
	EL2060	Low Voltage Power - Prototype	1/11/2019	7/26/2019	140	BNL M&S CE from UN: Materials & Services		18,801	23,264
		Low Voltage Power - Prototype Total						18,801	23,264
	EL2080	Low Voltage Power - Production-Labor	12/13/2019	7/10/2020	150	BNL M&S CE from UN: Electrical Technician	157	6,057	7,571
						BNL M&S CE from UN: Sr. Electrical Engineer	17	1,848	2,310
						BNL M&S CE from UN: Non Sr. Electrical Engineer	92	8,784	10,980
		Low Voltage Power - Production-Labor Total					265	16,689	20,861
	EL2090	Low Voltage Power - Production-Mater	7/26/2019	2/21/2020	150	BNL M&S CE from UN: Materials & Services		324,300	408,726
		Low Voltage Power - Production-Material Total						324,300	408,726
130.04.04.08.01 Low Voltage Power Total							**667**	**400,931**	**499,900**
130.04.04.08.02 Racks/Crates/B	EL2100	Racks/Crates/Backplanes - Conceptual	1/11/2010	7/31/2017	1900	BNL M&S CE from UN: Sr. Electrical Engineer	38	4,256	4,543
						BNL M&S CE from UN: Non Sr. Electrical Engineer	38	3,648	3,894
		Racks/Crates/Backplanes - Conceptual design Total					76	7,904	8,438
	EL2110	Racks/Crates/Backplanes - Design	7/31/2017	5/7/2018	200	BNL M&S CE from UN: PCB Layout Tech	160	15,360	18,093
						BNL M&S CE from UN: Sr. Electrical Engineer	160	17,920	21,108
						BNL M&S CE from UN: Non Sr. Electrical Engineer	160	15,360	18,093
		Racks/Crates/Backplanes - Design Total					480	48,640	57,294
	EL2120	Racks/Crates/Backplanes - Prototype -	5/7/2018	8/20/2018	75	BNL M&S CE from UN: Electronics Technician	80	4,493	5,325
						BNL M&S CE from UN: Materials & Services		5,000	6,025
						BNL M&S CE from UN: Sr. Electrical Engineer	40	4,452	5,276
						BNL M&S CE from UN: Non Sr. Electrical Engineer	40	3,816	4,522
		Racks/Crates/Backplanes - Prototype - v1 Total					160	17,762	21,148
	EL2130	Racks/Crates/Backplanes - Design - v2	8/20/2018	3/18/2019	150	BNL M&S CE from UN: PCB Layout Tech	41	3,888	4,706
						BNL M&S CE from UN: Sr. Electrical Engineer	41	4,536	5,491
						BNL M&S CE from UN: Non Sr. Electrical Engineer	41	3,888	4,706
		Racks/Crates/Backplanes - Design - v2 Total					122	12,312	14,904
	EL2140	Racks/Crates/Backplanes - Prototype -	3/18/2019	5/13/2019	40	BNL M&S CE from UN: Electrical Technician	80	3,077	3,745
						BNL M&S CE from UN: Materials & Services		5,000	6,187

	EL2140	Racks/Crates/Backplanes - Prototype - v	3/18/2019	5/13/2019	40	BNL M&S CE from UN: Sr. Electrical Engineer	40	4,480	5,453
						BNL M&S CE from UN: Non Sr. Electrical Engineer	40	3,840	4,674
		Racks/Crates/Backplanes - Prototype - v2 Total					160	16,397	20,058
	EL2160	Racks/Crates/Backplanes - Production-l	7/8/2019	6/22/2020	250	BNL M&S CE from UN: Electrical Technician	530	20,384	25,313
						BNL M&S CE from UN: Sr. Electrical Engineer	60	6,720	8,345
						BNL M&S CE from UN: Non Sr. Electrical Engineer	180	17,280	21,459
		Racks/Crates/Backplanes - Production-Labor Total					770	44,384	55,118
	EL2230	Racks/Crates/Backplanes - Production-l	5/13/2019	4/27/2020	250	BNL M&S CE from UN: Materials & Services		275,963	346,933
		Racks/Crates/Backplanes - Production-Material Total						275,963	346,933
130.04.04.08.02 Racks/Crates/Backplanes Total							**1,767**	**423,361**	**523,892**
130.04.04.08.03 Cooling	EL2180	Cooling - Conceptual design	1/11/2010	3/10/2017	1800	BNL M&S CE from UN: Sr. Electrical Engineer	162	18,144	19,282
						BNL M&S CE from UN: Non Sr. Electrical Engineer	72	6,912	7,345
		Cooling - Conceptual design Total					234	25,056	26,627
	EL2190	Cooling - Design	5/7/2018	9/24/2018	100	BNL M&S CE from UN: Sr. Electrical Engineer	80	8,960	10,618
						BNL M&S CE from UN: Non Sr. Electrical Engineer	80	7,680	9,102
		Cooling - Design Total					160	16,640	19,720
	EL2200	Cooling - Prototype	4/22/2019	8/5/2019	75	BNL M&S CE from UN: Electronics Technician	40	2,226	2,709
						BNL M&S CE from UN: Materials & Services		1,000	1,237
						BNL M&S CE from UN: Non Sr. Electrical Engineer	40	3,816	4,644
		Cooling - Prototype Total					80	7,042	8,591
	EL2220	Cooling - Production	4/27/2020	3/15/2021	230	BNL M&S CE from UN: Electronics Technician	191	10,690	13,545
						BNL M&S CE from UN: Materials & Services		66,240	85,324
						BNL M&S CE from UN: Non Sr. Electrical Engineer	23	2,208	2,798
		Cooling - Production Total					214	79,138	101,667
130.04.04.08.03 Cooling Total							**687**	**127,876**	**156,605**
Grand Total							**3,122**	**952,168**	**1,180,397**

Labor Details for Low Voltage Power Supplies (1.4.4.8.1)

Some notes: "min/mod" columns are minutes per module, added to "tot md" (total man-days) column.

Labor						**Labor in man-days**														
																8960				
WBS	**Task**	**Total**	**Sr Eng**	**Jr Eng**			**IC Des**	**Layout**	**M Tech**	**E Tech**			**Labor**							
		m-days	**m-days**	**m-days**	**min/mod**	**tot md**	**m-days**	**m-days**	**m-days**	**m-days**	**min/mod**	**tot md**	**Total**	**Design**	**Mfg**					
1.4.4.8.1	Low Voltage Power	**81.6**											***$ 745,470.40***	***$ 50,176.00***	***$ 9,420.80***			$ 1,112,233.60		
1.4.4.8.1.1	Conceptual Design - LV	20	10	10		10						0	*$ 16,640.00*	$ 16,640.00		0		$ 16,640.00		
1.4.4.8.1.2	Design - LV	30	10	20		20						0	*$ 24,320.00*	$ 24,320.00		0		$ 24,320.00		
1.4.4.8.1.3	Prototype - LV	0				0						0	*$ -*	$ -		18800		$ 37,232.00		
1.4.4.8.1.4	Production - LV	7.2				0					60	7.2	*$ 3,225.60*		$ 3,225.60		507600	$ 1,034,041.60		
	Power supply test stand development	16	1	5		5				10		10	*$ 9,216.00*	$ 9,216.00		2500				
	Power supply production testing	8.4	1	5	10	6.2					10	1.2	*$ 6,195.20*		$ 6,195.20		0			
												147.2	$ 18,636.80							
													$ 324,300.00				65.6			8736
													$ 342,936.80							
																RCB Totals:				
																		$ 1,034,041.60	Pwr	
	Total MD		*22*			*41.2*	*0*	*0*	*0*			*165.6*						$ 1,088,544.00	RCB	
	Hourly Rate		*$ 112.00*			*$ 96.00*	*$ 96.00*	*$ 96.00*	*$ 64.00*			*$ 56.00*						$ 231,859.20	Cool	
	Total $		*$ 19,712*			*$ 31,642*	*$ -*	*$ -*	*$ -*			*$ 74,189*								
																		$ 2,354,444.80	Total	
	Number of power supply modules (one per rack)		57																	
	Total man hours	652.8	176			329.6						147.2								
	EDIA man hours	528	168			280						80								
	Mfg man hours	252.8	16			49.6						67.2								

Materials Detail for Low Voltage Power Supplies

WBS	Task	Quan	Each	Total		Design	Mfg
1.4.4.8.1	Low Voltage Power			***$308,000.00***		***$21,300.00***	***$ 286,700.00***
1.4.4.8.1.1	Conceptual Design - LV			*$0.00*		$0.00	
1.4.4.8.1.2	Design - LV			*$0.00*		$0.00	
1.4.4.8.1.3	Prototype - LV	4	$4,700.00	*$18,800.00*	Two prototype units	$18,800.00	
1.4.4.8.1.4	Production - LV	61	$4,700.00	*$286,700.00*			$286,700.00
	Power supply test stand development	1	$2,500	*$2,500.00*	Misc parts for test stand	$2,500.00	
	Power supply production testing			*$0.00*			$0.00

Bill of Materials - Power Supply Unit

Item	Quan	Each	Total	Notes
Power supplies per 1W ($2/W rule of thumb)	2,000	$2.00	*$4,000.00*	
48V Power supplies for fan trays (150W per fan tray)	1	$200.00	*$200.00*	Average of some web prices for 400W @ 48V switchers
Rack mount enclosure	1	$200	*$200.00*	
Switches, connectors, indicators	1	$100	*$100.00*	
Power supply cabling to crates	2	$100	*$200.00*	
			$4,700.00	**Total for power supply unit**

Number of power supply modules (one per rack) with spares 61

Labor Details for Racks, Crates, Backplanes

Some notes: "min/mod" columns are minutes per module, added to "tot md" (total man-days) column.

Labor						**Labor in man-days**											
WBS	**Task**	**Total**	**Sr Eng**		**Jr Eng**		**IC Des**	**Layout**	**M Tech**		**E Tech**			**Labor**			
		m-days	**m-days**	**m-days**	**md/rack**	**tot md**	**m-days**	**m-days**	**m-days**	**m-days**	**md/rack**	**tot md**	**Total**	**Design**	**Mfg**		
1.4.4.8.2	Racks/Crates/Backplanes	**221.25**											***$ 150,400***	***$ 94,720***	***$ 55,680***		$ 1,193,264.00
1.4.4.8.2.1	Conceptual design - RCB	10	5	5		5						0	$ 8,320.00	$ 8,320.00		0	$ 8,320.00
1.4.4.8.2.2	Design - RCB	60	20	20		20		20				0	$ 48,640.00	$ 48,640.00		0	$ 48,640.00
1.4.4.8.2.3	Prototype - v1 - RCB	20	5	5		5				10		10	$ 12,800.00	$ 12,800.00		5000	$ 17,800.00
1.4.4.8.2.4	Design - v2 - RCB	15	5	5		5		5				0	$ 12,160.00	$ 12,160.00		0	$ 12,160.00
1.4.4.8.2.5	Prototype - v2 - RCB	20	5	5		5				10		10	$ 12,800.00	$ 12,800.00		5000	$ 17,800.00
1.4.4.8.2.6	Production - RCB	96.25	10	10	0.25	25.25					1	61	$ 55,680.00		$ 55,680.00	488592	$ 1,088,544.00
	Total MD		*50*			*65.25*	*0*	*25*	*0*			*81*					
	Hourly Rate		*$ 112.00*			*$ 96.00*	*$ 96.00*	*$ 96.00*	*$ 64.00*			*$ 56.00*					
	Total $		*$ 44,800*			*$ 50,112*	*$ -*	*$ 19,200*	*$ -*			*$ 36,288*	*$ 150,400*			220	
	Total number of racks with spares		61														
	Total number of crates with spares		122														
	Total man hours	1770	400			522		200				648					
	EDIA man hours	1000	320			320		200				160					
	Mfg man hours	770	80			202		0				488					

Materials Detail for Racks / Crates / Backplanes

WBS	Task	Quan	Each	Total		Design	Mfg
1.4.4.8.2	Racks/Crates/Backplanes			***$ 285,964.00***		***$ 10,000.00***	***$ 275,964.00***
1.4.4.8.2.1	Conceptual design - RCB			$ -		$ -	
1.4.4.8.2.2	Design - RCB			$ -		$ -	
1.4.4.8.2.3	Prototype - v1 - RCB	1	$ 5,000.00	$ *5,000.00*	Prototype backplane PCBs etc	$ 5,000.00	
1.4.4.8.2.4	Design - v2 - RCB			$ -		$ -	
1.4.4.8.2.5	Prototype - v2 - RCB	1	$ 5,000.00	$ *5,000.00*	2nd prototype	$ 5,000.00	
1.4.4.8.2.6	Production - RCB	61	$ 4,524.00	$ *275,964.00*			$ 275,964.00

Rack only -- typical Hammond rack with side panels and doors

Item	Quan	Each	Total	Notes
Welded rack frame 13C3034	1	$469	$ *469.00*	Newark @ 15
Solid side panel 31M1159	2	$159	$ *318.00*	Newark @ 25
Rack top vented w/ cable entry 50H3746	1	$52	$ *52.00*	Newark @ 50
Rear door steel louvered 90F9654	1	$281	$ *281.00*	Newark @ 25
Front plexiglas door 66F8044	1	$367	$ *367.00*	Newark @ 100
Rack bottom 91B1307	1	$37	$ *37.00*	Newark @ 50
Total for rack only			***$ 1,524.00***	

Bill of Materials - Rack / Crate / Backplane

Hammond rack per above	1	$ 1,524.00	$ *1,524.00*	
Power management module (power distr, interlocks)	1	$ 500.00	$ *500.00*	Wild guess
9U 1101.10 subrack with customized card guides	2	$500	$ *1,000.00*	Wild guess
Backplane PCB assembly	2	$ 500.00	$ *1,000.00*	Wild guess
Temperature sensors, wiring, etc per crate	2	$ 250.00	$ *500.00*	Wild guess
			$ -	
			$ 4,524.00	**Total rack / crate / backplane**

Total number of racks with spares	61
Total number of crates with spares	122

Labor Details for Cooling

Cooling is currently treated as per-rack only… this is all just a wild guess

Labor

WBS	Task	Total m-days	Sr Eng m-days	Jr Eng m-days	md/rack	Labor in man-days tot md	IC Des m-days	Layout m-days	M Tech m-days	E Tech m-days	md/rack	tot md	Labor Total	Design	Mfg		
1.4.4.8.3	Cooling	**90.2**											***$ 62,809.60***	***$ 50,560.00***	***$ 12,249.60***		
1.4.4.8.3.1	Conceptual design - cooling	30	20	10		10						0	$ 25,600.00	$ 25,600.00		0	$ 25,600.00
1.4.4.8.3.2	Design - cooling	20	10	10		10						0	$ 16,640.00	$ 16,640.00		0	$ 16,640.00
1.4.4.8.3.3	Prototype - cooling	15		5		5				10		10	$ 8,320.00	$ 8,320.00		1000	$ 9,320.00
1.4.4.8.3.4	Production - cooling	25.2		3		3				10	0.2	22.2	$ 12,249.60		$ 12,249.60	103680	$ 231,859.20
						0											
	Total MD		*30*			*28*	*0*	*0*	*0*			*32.2*					
	Hourly Rate		*$ 112.00*			*$ 96.00*	*$ 96.00*	*$ 96.00*	*$ 64.00*			*$ 56.00*					
	Total $		*$ 26,880*			*$ 21,504*	*$ -*	*$ -*	*$ -*			*$ 14,426*	*$ 62,810*				
	Total number of racks with spares		61														
	Total number of crates with spares		122														
COOLING	Total man hours	721.6	240			224						257.6					
	EDIA man hours	520	240			200						80					
	Mfg man hours	201.6	0			24						177.6					
RCB	Total man hours	2240	400			616	200					1024					
	EDIA man hours	1000	320			320	200					160					
	Mfg man hours	1240	80			296	0					864					
Power	Total man hours	700	176			337.6						201.6					
	EDIA man hours	400	160			280						80					
	Mfg man hours	300	16			57.6						121.6					
Summary	Total man hours	3661.6	816			1177.6	200					1483.2					
	EDIA man hours	1920	720			800	200					320					
	Mfg man hours	1741.6	96			377.6	0					1163.2					
		90.4															
		120															
		-29.6															

Materials Detail for Cooling

WBS	Task	Quan	Each	Total		Design	Mfg			
1.4.4.8.3	Cooling			***$ 59,560.00***		***$ 1,000.00***	***$ 58,560.00***			
1.4.4.8.3.1	Conceptual design - cooling			$ -		$ -				
1.4.4.8.3.2	Design - cooling			$ -		$ -				
1.4.4.8.3.3	Prototype - cooling	1	$1,000	$ *1,000.00*	Test hardware for cooling design	$ 1,000.00				
1.4.4.8.3.4	Production - cooling	61	$ 960.00	$ *58,560.00*	Per rack components		$ 58,560.00			
				$ -						
				$ -						
								40	40	23.7

Bill of Materials for cooling one rack

Item	Quan	Each	Total	Notes
			$ -	
Fan tray	*2*	$480	$ *960.00*	Budgetary quote: Control resources VariCool tray with I2C speed control, requires 48V bulk power
Water/air heat exchanger	*0*	$ 500.00	$ -	Now thinking of air cooling only
			$ -	
			$ -	
			$ -	
			$ 960.00	

Total number of racks with spares	61
Total number of crates with spares	122

	LBNE Water Cherenkov Detector **BASIS of ESTIMATE FORM (BoE)**	**Date of Estimate: 6/30/11** **Revision #:** **Prepared By: R. Van Berg** **Approved By:** **Level 2 Manager**

WBS Number: **130.04.04.09**	**WBS Title:** **Electronics Installation and Commissioning**

WBS Dictionary:

This task covers the technical part of the installation underground of electronics and DAQ system.

Cost Type **(check all that apply):** ___ EDIA Material ___ EDIA Labor _X_ MFG Material _X_ MFG Labor	**Costing Method** **(check all that apply):** ___ Engineering Judgment ___Physicist Estimate ___ Level of Effort ___ Vendor Quote (attached) _X_ Catalog Price (specify) _X_ Prior purchase _X_ Prior experience _X_ Parametric Estimate ___ Other- Description:_____

Attach Relevant Documents (including but not limited to):

M&S Contingency (%)**: 10%**	**Labor Contingency** (%)**: 25%**

Basis of Estimate
Details of Estimate: In the present installation scenario, Installation and Integration (WBS 1.4.8) provides transportation of assembled racks underground to the cavern, installs those racks in the final location, and then the LBNE electronics group takes over the remaining installation tasks. It is this last part that is covered under this WBS - the initial stand alone testing, connection of PMT cables and then integration with the DAQ system followed by commissioning of the full detector (or pieces of the detector) depending upon availability of dark shifts when the PMTs can be energized. Labor is estimated at 50% of one post-doc and one technician from the electronics group for a three year PMT installation period. This schedule is still unfixed, but the total effort should remain roughly constant. In addition, it is expected that there will be a significant number of base program supported students and post-docs aiding the effort and segueing seamlessly into commissioning and data analysis efforts. The M&S is shipping (in this model five rental truck trips from the East Coast to Homestake) plus travel for the post-doc and tech - apartment, airfare and per-diem. The travel algorithm used here is: Two airfares East Coast to Rapid City = $700, car rental 14 days @$40/day, two bedroom furnished apt rental @ $1400/mo. with no per diem except the two travel days - total $2860 per two person two week trip. Contingency & Method Contingency was estimated using the standard LBNE methodology, no unusual aspects to these tasks.

Assumptions/Interfaces

Main interface is to Installation on one side and Calibration (for commissioning) on the other.

Constraints

Comments

130.04.04.09 Electronics Installation and Commissioning

WBS LEVEL 5	ACTIVITY ID	ACTIVITY DESCRIPTION	START DATE	FINISH DATE	DURATION	RESOURCE	HOURS	COST	TOTAL with Escalation
130.04.04.09 Electronics Installa	EL2240	Physical installation UG	3/15/2021	3/14/2022	260	BNL M&S CE from UN: Electrical Technician	299	11,500	14,940
						BNL M&S CE from UN: Post Doc	151	7,238	9,403
						BNL M&S CE from UN: Travel		50,001	66,034
		Physical installation UG Total					450	68,738	90,377
	EL2250	Connection to DAQ	4/12/2021	4/11/2022	260	BNL M&S CE from UN: Post Doc	299	14,352	18,684
						BNL M&S CE from UN: Travel		19,999	26,466
		Connection to DAQ Total					299	34,351	45,150
	EL2260	Connection to PMTs	3/29/2021	3/28/2022	260	BNL M&S CE from UN: Electrical Technician	1,799	69,197	89,990
						BNL M&S CE from UN: Post Doc	299	14,352	18,665
						BNL M&S CE from UN: Travel		60,000	79,322
		Connection to PMTs Total					2,098	143,549	187,976
	EL2270	Verification	4/26/2021	1/3/2022	180	BNL M&S CE from UN: Electrical Technician	450	17,307	22,436
						BNL M&S CE from UN: Post Doc	599	28,771	37,297
						BNL M&S CE from UN: Travel		40,000	52,712
		Verification Total					1,049	86,078	112,445
	EL2290	Begin calibrations	1/3/2022	3/14/2022	50	BNL M&S CE from UN: Electronics Technician	120	6,720	8,860
						BNL M&S CE from UN: Post Doc	1,320	63,360	83,540
						BNL M&S CE from UN: Travel		26,224	35,148
		Begin calibrations Total					1,440	96,304	127,549
130.04.04.09 Electronics Installation and Commissioning Total							**5,336**	**429,021**	**563,496**
Grand Total							**5,336**	**429,021**	**563,496**

Labor Details for Installation

Installation labor copied from BOE spreadsheet, 3 man-years post-doc+tech @ 0.5 FTE

Labor

						Labor in man-days									
WBS	**Task**	**Total**	**Sr Eng**		**P Doc**		**IC Des**	**Layout**	**M Tech**		**E Tech**			**Labor**	
		m-days	**m-days**	**m-days**	**md/rack**	**tot md**	**m-days**	**m-days**	**m-days**	**m-days**	**md/rack**	**tot md**	**Total**	**Design**	**Mfg**
1.4.4.9	Installation	**667.5**											***$ 277,680***	***$ -***	***$ 277,680***
	First Year	222.5		111.25		111.25				111.25		111.25	$ 92,560.00		$ 92,560.00
	Second Year	222.5		111.25		111.25				111.25		111.25	$ 92,560.00		$ 92,560.00
	Third Year	222.5		111.25		111.25				111.25		111.25	$ 92,560.00		$ 92,560.00
		0				0						0	$ -		$ -
						0						0	$ -		
	Total MD		*0*			*333.75*	*0*	*0*	*0*			*333.75*			
	Hourly Rate		*$ 112.00*			*$ 48.00*	*$ 96.00*	*$ 96.00*	*$ 64.00*			*$ 56.00*			
	Total $		*$ -*			*$ 128,160*	*$ -*	*$ -*	*$ -*			*$ 149,520*			

Materials Detail for Installation

WBS	Task	Quan	Each	Total		Design	Mfg
1.4.4.9	Installation			***$ 122,640.00***		***$ -***	***$ 122,640.00***
	Truck trips	5	$3,000	*$ 15,000.00*	24 foot truck, 10 day rental, gas, mileage, motel, five trips east coast to Lead		$ 15,000.00
	Travel - Trips to LEAD	36	$2,990	*$ 107,640.00*			$ 107,640.00
				$ -		$ -	$ -
				$ -		$ -	$ -
				$ -		$ -	$ -
				$ -			$ -
					Total from above w/ 60% OH	***$ -***	***$ 196,224.00***

	LBNE Water Cherenkov Detector **BASIS of ESTIMATE FORM (BoE)**	**Date of Estimate: 7/20/2011** **Revision #: 5** **Prepared By: G. Sinnis** **Approved By:** **Level 2 Manager**

WBS Number: **130.04.05.01**	**WBS Title:** **Management and Safety**

WBS Dictionary:

This WBS element provides overall management for the calibration systems' safety, conceptualization, R&D, design , construction, testing installation, integration, and commissioning.

Cost Type **(check all that apply):** _X_ EDIA Material _X_ EDIA Labor ___ MFG Material ___ MFG Labor	**Costing Method** **(check all that apply):** ___ Engineering Judgment _X_Physicist Estimate ___ Level of Effort ___ Vendor Quote (attached) ___ Catalog Price (specify) ___ Prior purchase _X_Prior experience ___ Parametric Estimate ___ Other- Description:_____

Attach Relevant Documents (including but not limited to):

M&S Contingency (%)**: 20%**	**Labor Contingency** (%)**: 20%**

Basis of Estimate
Details of Estimate: This task involve coordinating and managing the effort of 7 universities and 2 national laboratories to design, build, and install a complete calibration system for the LBNE WCD. This includes a measurement of the water transparency, calibration of the timing, gain, angular response, and relative quantum efficiency of the PMTs, calibration of the energy scale and understanding of the systematic uncertainties in the measurement of particle energy, calibration of the particle identification efficiency and vertex resolution, measurement of the Gd content of the water (if the low-energy option is exercised), and the deployment of a series of environmental monitoring sensors within the WCD volume to measure the water level, temperature, and resistivity, sampling for the presence of biologics, the Radon content of the water, and the flow pattern within the WCD. This task will coordinate and participate in reviews and prepare documentation and budget estimates for the above tasks as needed by the project office. The calibration has several safety significant systems: radioactive sources, possibly a low-energy linac, and high-intensity laser systems. The Level 3 managers will work with the WCD Safety Officer and the system designers to develop appropriate storage facilities, operating procedures, and training plans to ensure that these systems are used and stored in accordance with all safety requirements. Labor Details At Los Alamos the labor cost in prior to CD-3 represent 0.15 FTE scientist to manage the Calibration effort, produce documentation, participate in reviews, and report to the collaboration and project office as needed. At Iowa State University the cost is for 1-month summer salary until CD-3 when it is for two months summer salary. There is increased effort at LANL the year prior to CD-2. After CD-3 we anticipate increased effort as construction and installation begins. Material Details 13.2k/year x 9 years = 118.8k The materials costs here are purely for travel. We estimate 6 trips per year for each of the leads (Sanchez and Sinnis). Three trips for collaboration meetings and three trips to participate in reviews. The cost of a trip at Iowa State is roughly 1k and at Los Alamos 1.2k (due to higher overhead rates). This estimate is based upon actual trip costs during FY10. Contingency & Method Assumptions Level 4 managers will have sufficient resources available to complete their tasks. These resources will come from operating grants from the DoE or NSF.

Assumptions/Interfaces

Constraints

Comments

130.04.05.01 Management and Safety

WBS LEVEL 5	ACTIVITY ID	ACTIVITY DESCRIPTION	START DATE	FINISH DATE	DURATION	RESOURCE	HOURS	COST	TOTAL with Escalation
130.04.05.01.01 Management	CL1690	Management, Los Alamos	1/11/2010	4/4/2022	3120	BNL M&S CE Costs		6,989	8,021
						BNL M&S CE from LA: Sr. Scientist	3,994	1,184,818	1,344,736
						BNL M&S CE from LA: Travel		91,011	104,446
		Management, Los Alamos Total					3,994	1,282,818	1,457,203
	CL1700	Management, ISU	1/11/2010	4/4/2022	3120	BNL M&S CE from IS: Non Sr. Physicist/Scientist	2,246	190,832	216,590
						BNL M&S CE from IS: Travel		72,354	83,035
		Management, ISU Total					2,246	263,186	299,624
130.04.05.01.01 Management Total							**6,240**	**1,546,004**	**1,756,827**
Grand Total							**6,240**	**1,546,004**	**1,756,827**

	LBNE Water Cherenkov Detector **BASIS of ESTIMATE FORM (BoE)**	**Date of Estimate: 7/20/2011** **Revision #: 5** **Prepared By: J. Napolitano/ G. Sinnis** **Approved By:** **Level 2 Manager**

WBS Number: **130.04.05.02**	**WBS Title:** **Water Transparency Monitoring**

WBS Dictionary:

This WBS element covers requirements specifications, conceptual design, engineering development, fabrication, installation, integration, and commissioning of systems to monitor the absorption and scattering lengths of the WCD water.

Cost Type **(check all that apply):** _X_ EDIA Material _X_ EDIA Labor _X_ MFG Material ___ MFG Labor	**Costing Method** **(check all that apply):** _X_ Engineering Judgment _X_Physicist Estimate ___ Level of Effort _X_ Vendor Quote (attached) _X_ Catalog Price (specify) ___ Prior purchase ___ Prior experience ___ Parametric Estimate ___ Other- Description:_____

Attach Relevant Documents (including but not limited to):

M&S Contingency (%)**: 25%**	**Labor Contingency** (%)**: 32%**

Basis of Estimate
Details of Estimate: There are three independent methods that will be implemented to measure the absorption and scattering lengths of the LBNE WCD water. 1. In situ system 1. This will be a straightforward addition to the PMT calibration system and have a path length equal to the diameter of the detector. Light beams at different detector altitudes (~3-5) will enable us to investigate stratification of the water. 2. A small portable device that we can place at various locations within the water volume. 3. An external system, with a well-controlled environment will be used to measure the attenuation length (1/attenuation = 1/absorption + 1/scattering) of the water. Currently two such systems are under development for other projects. We will decide which of these two external systems we will pursue for LBNE prior to CD-2. The accurate measurement of the water attenuation properties (both absorption and scattering) as a function wavelength is one of the main limiters to understanding the detector energy calibration. An external system is required to accurately measure the absorption of light as a function of wavelength in a well-controlled environment. An in situ system is needed to measure the scattering of light in the detector (the external systems can not measure the optical scattering). Finally a portable system would be highly advantageous if (as occurred in the Super Kamiokande detector) the WCD stratified into one or more layers with different optical properties. Therefore we have costed all three systems below. These systems will be left as conceptual designs until CD-3 is granted. The in-situ laser/LED calibration system will be mounted on the PMT support structure to direct light across the detector volume. Therefore this system must be ready when the PMTs are being installed. Labor Details 1.4.5.2.1.1 The labor here is that required to design, procure, construct, test, and install a set of fibers placed horizontally and vertically within the WCD to inject a beam of light across the detector. This includes the design of parts that properly fix the beam direction and control the beam divergence. Also, it is necessary to develop software to analyze the data and extract the attenuation length and scattering length of the water. This process relies heavily on the Monte Carlo detector simulation and requires thorough understandings of the MC simulation code." The simulations will be performed by student and postdoc. The labor estimate is based upon time taken to design a similar system for Super Kamiokande. 1.4.5.2.1.2 We have investigated the use of a small (25 cm path length) device manufactured by WetLabs. The instrument is very stable, however the path length limits the device to measuring relatively short attenuation lengths (~30-50m). The mechanical engineer will develop a deployment system for the C-Star device and work with WetLabs to develop a system with greater accuracy than their current systems. During this time the postdoc would also be completing verification tests of the C-Star specifications (including possible modifications for a prototype from WETLabs). A graduate student will work under the supervision of the senior scientist for installation and implementation of the C-Star in preparation for the final experiment configuration. The labor estimates are based on experience with a similar device used in the Daya Bay experiment. 1.4.5.2.2 Since detailed design and development has already been completed no further funds are required prior to CD-2. Costs after CD-3 are associated with the construction (in house) of two complete systems. These systems will be built at either UC Irvine or LLNL and characterized and performance tested at Irvine (or LLNL). This will take roughly 2 years to complete. One of the two systems will then be taken apart and

shipped to DUSEL for installation at LBNE. The costs for the installation and testing of the system at the LBNE site are included. Note that labor for this effort is not paid by the project. Some software will be written to archive the transparency measurements into the LBNE database.

Material Details

1.4.5.2.1.1 112.5k For details on the in-situ system that uses the PMT calibration system see the figure under WBS 1.4.5.3 (PMT Calibration: boe-1.4.5.3-figure-1.pdf). We will run between 3 and 5 additional fibers at different altitudes within the detector. These fibers and associated optics will be used to shine light across the detector's diameter. The total amount of light detected is a measure of the absorption length of the water, while the timing of the received light is dependent upon the scattering of the light in the detector. The costs captured here are for the additional materials required for the water transparency measurement. We estimate roughly 20 fibers (to be placed both horizontally and vertically in the detector) plus optical hardware to couple these fibers to the calibration system and form a beam. Travel costs are to interface with the PMT and PMT structure teams, and install and test final system.

Fixed horizontal and vertical injection fibers	80k	Assume 20 fibers at 4k each (Thorlabs catalog)
Misc. optics	10k	Physicist estimate
Overhead	22.5k	

1.4.5.2.1.2 10k The materials cost for the portable "C-Star" system from WetLabs is based upon a quote from the manufacturer, (see attachment Figure boe-1.4.5.2-figure-1.pdf). We require an additional 5k to build a deployment system for this device.

1.4.5.2.2 113.3k The materials costs for the external systems are well understood, as these systems have been built. The system from UC Irvine already has sufficient precision to meet the needs of LBNE. For this reason we use the materials cost for this system. Note we have priced two full systems: one will be deployed at the LBNE site and the other will remain at UC Irvine for further development work. Attached is a picture (boe-1.4.5.2-figure-2.pdf) of the UC Irvine system at Irvine and below that is the detailed cost sheet for this system. The travel and labor costs at the end are associated with the construction and installation of the device at LBNE.

ITEM	COST
2-3m Polypropylene Pipe	$3,000.00
Bottom Plate w/ UVT Acrylic Window	$300.00
Pressure Sensor	$1,400.00
4" Aluminum Hemispeheres (2)	$50.00
LabSphere Spectraflect Paint and Spray Bottles	$400.00
Spectrophotoscopic Grade Alocohol	$100.00
Breadboard	$700.00
12" Aluminum Hemispheres (2)	$300.00
Linear Stages (2)	$1,240.00
UV Enhanced Silicon Photodiodes (2)	$300.00
PC, Monitor, etc.	$2,000.00
Cleverscope PC Oscilloscope	$2,100.00
7 Volt Power Supply	$150.00
18 Volt Power Supply (4)	$600.00

5 Volt Power Supply (2)	$300.00
9 Volt Power Supply (2)	$300.00
12 Bit ADC and Power Supply	$200.00
16 Channel PC Relay Board	$250.00
Signal Generator	$2,000.00
Motion Controller, Switchbox, Actuators, etc.	$3,000.00
Mirrors and Mounts	$750.00
Beam Splitter and Mounting	$400.00
Photodiode Amps and Relays	$200.00
Laser Pointers (3)	$1,000.00
Professional Laser Diodes (3)	$20,000.00
Nitrogen Laser	$5,000.00
Upper and Lower Box Structures	$500.00
Solenoid Valves (2)	$600.00
Water Pumps (2)	$500.00
Various Hardware and Materials	$2,000.00
Various Electronics	$2,000.00
Mounting	$5,000.00
TOTAL FOR PARTS AND MATERIALS	$56,640.00
PARTS AND MATERIALS FOR 2 MinIDEALs	$113,280.00
TRAVEL COSTS FOR 3 PERSONS	$20,000.00
Labor (2 students for 9 months)	$56,250.00
TOTAL COST TO BUILD 2 MinIDEALs	$189,530.00

Table 1. Itemized parts cost for two IDEAL systems. Based upon existing system built at UC Irvine.

Contingency & Method

Assumptions
External proposals to fund the bulk of the labor costs receive funding in a timely fashion.

Assumptions/Interfaces

Constraints

Comments

130.04.05.02 Water Transparency Monitoring

WBS LEVEL 5	ACTIVITY ID	ACTIVITY DESCRIPTION	START DATE	FINISH DATE	DURATION	RESOURCE	HOURS	COST	TOTAL with Escalation
130.04.05.02.01 In situ water m	CL1740	In Situ Laser/LED system-Labor	1/3/2017	6/10/2020	897	BNL M&S CE from UN: Mechanical Technician	753	48,223	57,902
						BNL M&S CE from UN: Travel		16,002	19,535
						BNL M&S CE from UN: Uncosted Grad Student	2,000		
						BNL M&S CE from UN: Uncosted Post Doc	2,996		
		In Situ Laser/LED system-Labor Total					5,750	64,225	77,437
	CL1750	In situ portable system	1/2/2020	2/23/2022	560	BNL M&S CE Costs		10,002	12,998
						BNL M&S CE from RP: Mechanical Designer	498	33,830	43,247
						BNL M&S CE from RP: Uncosted Post Doc	1,999		
						BNL M&S CE from RP: Travel		3,752	4,876
						BNL M&S CE from RP: Sr. Scientist	202	202	258
		In situ portable system Total					2,699	47,785	61,378
	CL1745	In Situ Laser/LED system-Material	12/31/2014	6/26/2018	897	BNL M&S CE from UN: Materials & Services		112,502	130,309
		In Situ Laser/LED system-Material Total						112,502	130,309
130.04.05.02.01 In situ water monitoring Total							**8,449**	**224,512**	**269,124**
130.04.05.02.02 External Syster	CL1760	External system-Material	1/3/2017	1/24/2022	1320	BNL M&S CE Costs		113,995	142,248
		External system-Material Total						113,995	142,248
	CL1770	External system-Labor	1/3/2017	1/24/2022	1320	BNL M&S CE from IR: Uncosted Grad Student	2,996		
						BNL M&S CE from IR: Uncosted Physicist/Scientist	805		
						BNL M&S CE from IR: Travel		19,998	24,954
		External system-Labor Total					3,802	19,998	24,954
130.04.05.02.02 External System Total							**3,802**	**133,993**	**167,203**
Grand Total							**12,251**	**358,505**	**436,327**

Sales Quote 001126

WET Labs Inc.
620 Applegate St.
PO Box 518
Philomath, OR 97370

Phone: 541-929-5650
Fax: 541-929-5277
Contact: Angela Gellatly

Date: 05/21/2008
Ship via: DHL
Revision:

Bill to:
Rensselaer Polytechnic Inst
Jim Napolitano
Dept of Biology MRC 345
110 8th St
Troy, NY 12180-2162
USA

Ship to:
Rensselaer Polytechnic Inst
Jim Napolitano
Dept of Biology MRC 345
110 8th St
Troy, NY 12180-2162
USA

Phone: (518) 276-8019
email: napolj@rpi.edu
PO #:
Account #: REN001

Item	MRP status	Part #	S/N	Description	Qty	Price	Total Price
0001	I R	NA		C-Star 25cm, Plastic, 370nm	1	4060.00	4060.00
Comments:	*Digital output, see next item*						
0002	I R	AXA-BX0035		Digital RS-232 Output	1	400.00	400.00
Comments:	*OPTIONAL RS-232 Serial output*						
0003 210036	I R	CXA-000004		ECO sea cable	1	580.00	580.00
Comments:	*Twenty (20) meter cable for Digital C Star*						
0004 0 channel	I R	CXA-KX0112		ECO host cable	1	350.00	350.00
Comments:							

Notes: Quotation valid: 90 days

Subtotal:	**5,390.00**
Discount:	**808.50**
Tax:	**0.00**
Shipping:	**110.00**
USD Total:	**4,691.50**

Delivery: 6 weeks
Terms: Net 30 days
Warranty: 1 year parts (new only) and labor
20% restocking fee for returned products

External system to measure the attenuation length of water at UC Irvine

	LBNE Water Cherenkov Detector **BASIS of ESTIMATE FORM (BoE)**	**Date of Estimate: 7/20/2011** **Revision #: 5** **Prepared By: S. Matsuno/ G. Sinnis** **Approved By:** **Level 2 Manager**

WBS Number: **130.04.05.03**	**WBS Title:** **Photomultiplier Calibration**

WBS Dictionary:

This WBS element covers the requirements specification, conceptual design, engineering development, fabrication, installation, integration, and commissioning of the laser calibration systems. This section addresses the calibration of the PMT and electronics slewing and amplitude response, as well as position dependence and calibration of the veto region.

Cost Type **(check all that apply):** _X_ EDIA Material _X_ EDIA Labor ___ MFG Material ___ MFG Labor	**Costing Method** **(check all that apply):** ___ Engineering Judgment _X_Physicist Estimate ___ Level of Effort ___ Vendor Quote (attached) _X_ Catalog Price (specify) ___ Prior purchase _X_ Prior experience ___ Parametric Estimate ___ Other- Description:_____

Attach Relevant Documents (including but not limited to):

M&S Contingency (%)**: 36%**	**Labor Contingency** (%)**: 23%**

Basis of Estimate
Details of Estimate: The heart of the PMT calibration system will be a high-intensity short-pulse light source. This light will have variable attenuation and be distributed via fiber optics to several locations within the LBNE WCD via an analog fiber optic switch. The pulse-to-pulse variation of the laser will be measured by an independent light sensor and a dedicated data acquisition system. The primary location within the WCD is the central calibration port, where the laser pulse will be converted into a nearly isotropic light source. In addition, there will be a movable (in altitude) light source accessible via the other PMT calibration ports. The top veto region will contain many fibers to ensure complete coverage of the PMTs in this region. The central light source will also provide light to fibers used in the water transparency WBS #1.4.5.2.1.1. The cost of the additional fibers is captured in that WBS element. WBS element #1.4.5.3.1 covers the preliminary design of the system, including R&D required to develop the nearly isotropic light diffusing system at the central calibration port and investigation of alternate light sources, the final system design, procurement of parts and testing and installation of the system. WBS element #1.4.5.3.2 covers the software required to operate and control the calibration system and the development of analysis software to convert the calibration data into calibration constants (timing and gain) for use in event reconstruction. Labor Details 1.4.5.3.1 Prior to CD-2 we will develop a preliminary system design for the laser calibration system. This includes R&D for an isotropic light diffusing ball and a suitable high-intensity short pulse light source. While an absolutely isotropic light source is highly desired for the central calibration port, this is not possible. The design of the PMT calibration system depends upon how well we achieve this goal. For example, if we cannot construct a light source that is sufficiently isotropic, we will need to develop a system to measure the light intensity as a function of position (azimuthal and polar angles) and a system to determine the orientation of the diffusing ball. Therefore we have established an early program to develop an isotropic light source. The milestones associated with this task are: 1. Design test setup to measure laserball uniformity – 30 September 2011 2. Report documenting the completion of the test setup for laserball uniformity – 1 December 2011 3. Report documenting the results of a test of a single laserball in the test stand – 1 Feb 2011. Upon the completion of this work (after CD-1) we will: 1. Develop and test other laserball designs for uniform light distribution. – 30 September 2012 2. Perform a preliminary design of the veto region calibration system (number of fibers required and placement). – 1 Feb. 2013 3. Perform a preliminary design of the movable light source. - 30 September 2013 4 years prior to the beneficial occupancy of the WCD area, we will develop the final system design and procure the components. Construction and testing of the system outside of the WCD volume will follow. After successful testing the system will be installed into the WCD 200 kTon module for in-situ testing. We envision this to be done in 2 stages. One coincides the PMT installation and consists primarily of fiber installation, which requires access to the PMT support structure. The other at the time closer to the detector completion for the remaining installation and in-situ test. Along with the external construction of the system development of control software for calibration system begins and development of the PMT calibration analysis software. After the final system installation and testing, development of analysis software to convert calibration data to PMT timing and gain corrections, PMT relative QE measurement, and angular dependence of PMT response will be completed. Finally, the software will be installed at the site.

Material Details

1.4.5.3.1 502k The attached figure boe-1.4.5.3-figure-1.pdf) shows a conceptual design of the laser calibration system. Note that this includes both the costs for the preliminary test setup and the costs for the final system.

The materials needed for this system are listed in Table 1 below. Note the fibers injecting light horizontally from the right are not included in the materials estimate below. These fibers are used in the water transparency measurement (WBS #1.4.5.2.1.1) where their costs are captured. There are several light sources (lasers) to measure the PMT response at difference wavelengths (and account for the wavelength dependence of the propagation speed of light), two optical switches, several monitoring PMTs, a variable attenuation filter system, a control computer and electronics (pulse/delay generator and triggering circuitry, NIM crate, etc.), and many optical fibers and fiber connectors. The number of fibers needed for the veto region is not known at this time, we have made the conservative assumption that we need a fiber spacing comparable to twice the thickness of the veto region (1 meter), which gives roughly 50 fibers needed. (Note that SuperK had a 2.5-meter thick veto region and had fibers spaced at 10-meter intervals.)
Material includes an R&D system whose focus is to measure the uniformity of laser diffuser ball. The system consists of light source, motorized rotating laser ball support, light detectors (PMT), and associated control electronics and a computer.

Item	Cost ($k)	Basis
Development System		
Laser	0	(borrowed)
Fibers (testing) + connectors, etc.	26	Thorlabs catalog
Misc.	10	Experience
Final System		
Light source	100	SuperK experience
Automated light attenuation box	50	SuperK experience
Fiber Light Guide with diffusing ball (4 sets)	40	SuperK experience
Optical fiber switch	120	SuperK experience
Optical fibers for veto region	52	1k per fiber: 52 fibers
(Thorlabs catalog plus cladding and connectors)		
Control electronics and computer	50	SuperK experience
Misc. hardware	10	Physicist est/prev. experience
Total	458k	

Contingency & Method

Assumptions

Off project funding is available for scientists and postdoc at U. Hawaii.

Assumptions/Interfaces

Constraints

Comments

130.04.05.03 Photomultiplier Calibration

WBS LEVEL 5	ACTIVITY ID	ACTIVITY DESCRIPTION	START DATE	FINISH DATE	DURATION	RESOURCE	HOURS	COST	TOTAL with Escalation
130.04.05.03.01 Timing and Puls	CL1790	Conceptual design of system	4/6/2011	4/8/2013	500	BNL M&S CE from UN: Materials & Services		36,000	36,982
						BNL M&S CE from UN: Uncosted Physicist/Scientist	2,060		
						BNL M&S CE from UN: Uncosted Post Doc	2,000		
						BNL M&S CE from UN: Non Sr. Mechanical Engineer	2,890	155,598	160,599
		Conceptual design of system Total					6,950	191,598	197,582
	CL1800	Final Design of system	1/6/2016	7/3/2017	389	BNL M&S CE from UN: Uncosted Physicist/Scientist	1,151		
						BNL M&S CE from UN: Uncosted Post Doc	2,054		
						BNL M&S CE from UN: Non Sr. Mechanical Engineer	1,000	53,825	61,296
		Final Design of system Total					4,205	53,825	61,296
	CL1810	Procurement of Components-Material	8/28/2017	8/10/2018	250	BNL M&S CE from UN: Materials & Services		422,000	507,077
		Procurement of Components-Material Total						422,000	507,077
	CL1820	Ex-situ assembly and testing	8/13/2018	6/12/2020	480	BNL M&S CE from UN: Uncosted Physicist/Scientist	2,798		
						BNL M&S CE from UN: Uncosted Post Doc	3,998		
						BNL M&S CE from UN: Non Sr. Mechanical Engineer	802	43,158	52,966
		Ex-situ assembly and testing Total					7,598	43,158	52,966
	CL1830	Installation	6/15/2020	5/13/2022	500	BNL M&S CE from UN: Uncosted Physicist/Scientist	2,150		
						BNL M&S CE from UN: Uncosted Post Doc	2,000		
						BNL M&S CE from UN: Non Sr. Mechanical Engineer	1,000	53,840	69,430
		Installation Total					5,150	53,840	69,430
	CL1811	Procurement of Components-Labor	7/4/2017	6/18/2018	250	BNL M&S CE from UN: Uncosted Physicist/Scientist	1,150		
						BNL M&S CE from UN: Uncosted Post Doc	2,000		
						BNL M&S CE from UN: Non Sr. Mechanical Engineer	400	21,536	25,348
		Procurement of Components-Labor Total					3,550	21,536	25,348
130.04.05.03.01 Timing and Pulse Height Calibration Total							**27,453**	**785,957**	**913,697**
130.04.05.03.02 PMT Calibratior	CL1840	PMT Calibration Software	6/15/2020	5/13/2022	500	BNL M&S CE from UN: Travel		25,000	32,774
						BNL M&S CE from UN: Uncosted Physicist/Scientist	1,500		
						BNL M&S CE from UN: Uncosted Post Doc	6,000		
		PMT Calibration Software Total					7,500	25,000	32,774
130.04.05.03.02 PMT Calibration Software Total							**7,500**	**25,000**	**32,774**
Grand Total							**34,953**	**810,957**	**946,471**

* Schematic diagram of laser calibration system

(Shige Matsuno, U.Hawaii / 17−Mar−10)

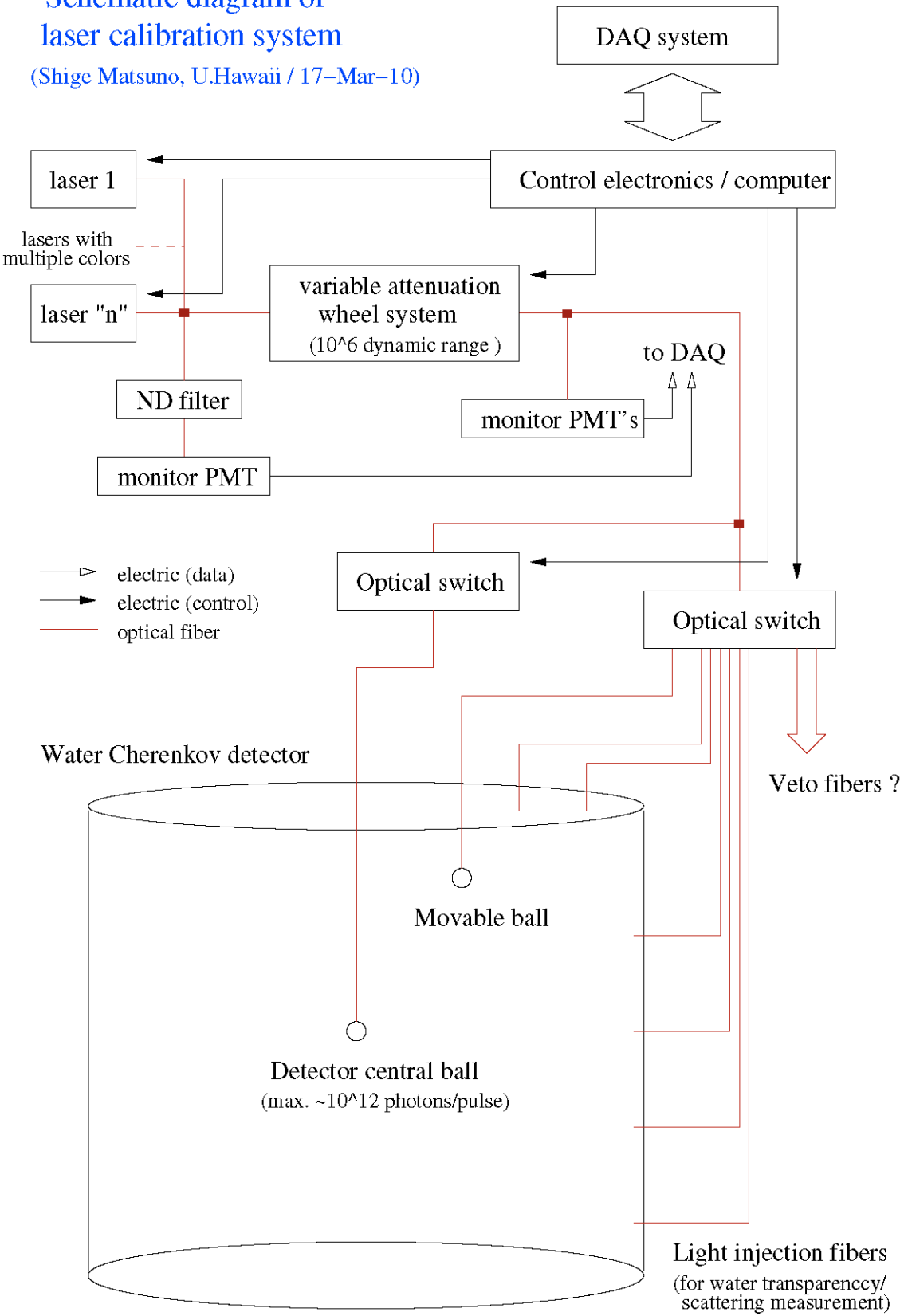

	LBNE Water Cherenkov Detector **BASIS of ESTIMATE FORM (BoE)**	**Date of Estimate: 7/20/2011** **Revision #: 5** **Prepared By: T. Kutter/G. Sinnis** **Approved By:** **Level 2 Manager**

WBS Number:	**WBS Title:**
130.04.05.04	**Energy Calibration**

WBS Dictionary:

This WBS element covers the requirements specification, conceptual design, engineering development, fabrication, installation, integration, and commissioning of the systems that address the energy calibration of the detector. The task includes the calibration of the energy scale and linearity, energy resolution, directional dependencies of energy scale and resolution and the stability of the energy calibrations.

Cost Type **(check all that apply):**	**Costing Method** **(check all that apply):**
_X_ EDIA Material _X_ EDIA Labor _X_ MFG Material ___ MFG Labor	___ Engineering Judgment _X_Physicist Estimate ___ Level of Effort ___ Vendor Quote (attached) _X_ Catalog Price (specify) ___ Prior purchase _X_ Prior experience ___ Parametric Estimate ___ Other- Description:_____

Attach Relevant Documents (including but not limited to):

M&S Contingency (%)**: 40%**	**Labor Contingency** (%)**: 39%**

Basis of Estimate
Details of Estimate: Labor associated with Task 1.4.5.4.1 is funding for a postdoc (1/2 at LSU and 1/2 at ISU) for two years to determine the need for a high-energy accelerator to calibrate the energy response of the detector near 1 GeV. This will fund a study with deliverables and milestones on the efficacy of cosmic muons to perform this task. Labor associated with 1.4.5.4.2.1 is funding for ½ a postdoc at LSU for the first two years and a full postdoc and ½ a postdoc at ISU for the third year to develop an overall calibration strategy and an understanding of the impact of the detector calibration on the final detector sensitivity. This is primarily a simulation task that requires an experienced physicist. The low energy calibration task 1.4.5.4.2.2 is a preliminary and final design of calibration sources, their containers, and a source deployment system. The outcome of task 1.4.5.4.2.1 will affect the number of required low energy calibration sources and the amount of work required for this task. The risk factors reflect the present uncertainty. The work estimate for task 1.4.5.4.2.3 is based upon SNO experience and costs for radioactive source development. This estimate includes the following sources: DT Generator for 16N, 8Li, Ni-Cf. Pending the outcome of task 1.4.5.4.2.1 the list of sources may be tailored to better reflect the most essential needs and additional sources such as a pT generator might have to be added. Note that the above system can be used for both detectors at different times. Task 1.4.5.4.2.4 includes the control and DAQ software for the deployment system, software for triggered sources (DAQ interaction) and slow control monitoring software for the calibration devices. For all elements both prototype and final software is included in the estimate. Labor Details 1.4.5.4.1.1 This labor is to fund one full post-doc split between ½ FTE at LSU and ½ FTE at Iowa State. The task must be completed in FY12 to allow time for further design studies prior to CD-2, if the study finds that such are required. The postdocs will be assisted by a graduate student either at LSU or Iowa State. The study involves the impact of energy resolutions, uncertainty in energy resolution, and energy scale errors, on the sensitivity of the experiment to relevant neutrino oscillation physics. There are 3 tasks that need to be performed: 1. Determine the quantitative calibration requirements at high energies which are most relevant for neutrino long baseline oscillation physics, the primary physics objective of the LBNE collaboration/project, 2. investigate the feasibility to achieve the energy calibration requirements based on cosmic muons 3. evaluate the additional benefits which only a high energy accelerator could provide. The task will employ the LBNE detector simulation program to study detector effects and the GloBES program to determine sensitivity to relevant neutrino oscillation parameters. This task must be completed in FY12 to provide sufficient time to a develop high-energy accelerator design and cost in time for CD-2 if cosmic muons are determined to provide inadequate calibration to meet the oscillation physics goals. The travel costs are for 2 trips (one for each postdoc) is to travel to a collaboration meeting and present their results. It is assumed that modest travel funds (~$2k) can be secured through the project for the post-doc to travel to a collaboration meeting and/or analysis meetings to present results and participate in discussions. Below are detailed milestones for tasks 1.4.5.4.1 and 1.4.5.4.2.1

Task 1.4.5.4.1 - a cosmic muon versus accelerator trade study

a. determine quantitative calibration requirements at high energies which are most relevant for neutrino long baseline oscillation physics, the primary physics objective of the LBNE collaboration/project

- learn GLoBES and study sensitivity impact of energy bias, energy resolution making reasonable assumptions about these quantities
  Milestone - September 30, 2011 – Produce preliminary report.
- use WCSim and existing recon tools to explore achievable parameter ranges in resolution and energy bias for simulated beam events; update GLoBES study with input from obtained parameter ranges
  Milestone - November 2011 (or later depending on availability of reconstruction tools) – Report on results of study

b. investigate the feasibility to achieve the energy calibration requirements based on cosmic muons

c. evaluate the additional benefits which only a high energy accelerator could provide

- repeat tasks from earlier bullets under 1a) for simulated
  - cosmic muon events (direction, energy distribution, position)
  - accelerator events (multiple electrons, total energy distribution, direction, position, …)

  Milestone - February 2012 - final report on efficacy of cosmic muons as calibration source at high energies.

Task 1.4.5.4.2.1 Develop an Energy Calibration Strategy. We will determine a prioritized list of energy calibration requirements and establish how variations in the requirements impact the overall sensitivity to LBNE physics. Based on the strategies employed by other experiments in conjunction with detector simulations, appropriate calibration sources and strategies will be identified to satisfy the energy calibration requirements. The purpose of the task is to select the critical calibration sources and separate them from desirable but not required calibration devices. The task serves to perform a quantitative cost benefit study and a down selection the options of calibration sources. In order for the calibration strategy and source selection to be complete for a CD-2 review, it is critical that work on the task be started as soon as possible. The labor cost is for 1/2 a post-doc at LSU for the first 2 years and a full postdoc at LSU and ½ a postdoc at ISU for third year. Detailed milestone given below.

a. determine a prioritized list of energy calibration requirements and establish how variations in the requirements impact the overall sensitivity towards LBNE physics (include non-beam related physics)

- study LBNE physics group document and identify relevant physics sensitivity calculations/plots and relevant tools
- following strategy in analogy to 1a) determine sensitivity as function of calibration input parameters for realistic range (e.g. quantitatively justifiable with WCSim based simulations)

Milestone - February 2012 – report

b. select required and desired calibration sources.

- continuation of (a) with explicit goal to establish prioritized list of calibration input parameters for realistic parameter ranges

  Milestone - March 2012

c. perform a quantitative cost benefit study and successively a down selection for options of calibration sources
   - perform cost estimate for calibration devices based on list from (a) and (b)
   - re-prioritize list of sources under consideration of calibration device cost estimate

     Milestone - June 2012

It is assumed that travel funds (~$1k) can be secured through the project for the post-doc to travel to a collaboration meeting and/or analysis meetings to present results and participate in discussions.

1.4.5.4.2.2 In FY12 the scientist will work with an engineer to translate the outcomes of the high and low energy calibration studies and developed strategies into technical requirements for the corresponding calibration components. Specifically, the following parameters are expected to affect the design of the deployment system: 1) range and number of reachable calibration positions, 2) position accuracy and 3) calibration duration. Key components and critical parts will be identified and candidate parts will be purchased or manufactured and their performance tested. Under the supervision of the scientist a graduate student will perform the tests with support from a technician and analyze the resulting data. The goal is to develop a preliminary design of the source containers, sources, and source deployment system for CD-2. The final system design will occur prior to CD-3. This will require the scientist, post-doc and graduate student to work closely with an engineer and a technician to design the calibration system (sources, containers, and deployment system). After CD-3 the mechanical components of the system will be constructed and tested externally. Following the external testing the system will be deployed in the WCD and tested in situ.

1.4.5.4.2.3 The scientist and post-doc will work with the engineer, technicians and graduate students to build the radioactive sources (until source study/down-select is complete we assume here that we will utilize an 8Li source and a Ni-Cf source as well as a DT generator). Other sources may be added or substituted as a result of the study performed in FY11 (WBS # 1.4.5.4.2.1). In addition, the DT generator system must be built and tested externally. After CD-3 the systems will be installed at the LBNE far detector complex and tested in situ.
The construction of the different calibration sources lend themselves to good hardware thesis projects for graduate students which will result in data analysis and physics study topics that should satisfy the requirements of a PhD program.

1.4.5.4.2.4 This task will fund a fulltime post-doc prior to CD-3 and ½ a post-doc (Off Project) in consecutive years to develop, test, and implement the software needed to control the deployment system, for the triggered sources (to generate a detector trigger) and interface with the LBNE data acquisition system. This work is needed for the prototype and final systems and requires overlap with the calibration system design phase and the construction phase to enable the external testing of components. During the final design stages a fulltime effort is required to allow testing and timely feedback of the calibration system.

Material Details
1.4.5.4.1.1 --- ($2k Travel) Travel is for 2 trips (one for each post-doc) to report their results at a

collaboration meeting.
1.4.5.4.2.1 --- ($1k Travel) Travel is for one trip for post-doc to report his/her results at a collaboration meeting.
1.4.5.4.2.2 --- ($50k in after CD-2; $85k after CD-3)
$50k for prototype source deployment system that will ultimately become a final source deployment system.
$30k for second deployment system that will be installed on second detector and can also serve as temporary spare for first detector.
$35k for materials for source container prototyping.
$20k to cover machining costs and electrical work for prototype source containers.

1.4.5.4.2.3 --- ($256k: $130k after CD-3 and $90k the following year for Materials and $9k Travel). Travel is for engineer and technicians to travel to LBNE site to oversee the installation and testing of the sources/source deployment system and the DT generator. (3 trips each total 9 trips).

Details of the materials cost estimate are shown in the table below.

Item	Cost	Cost Basis	Comment/potential vendor
DT Generator	80k	catalog price	DelMar Ventures
DT Generator ancillary equipment	50k	SuperK experience	
8Li source	30k	SNO experience	
Ni-Cf source	30k	SNO Experience	
source deployment system	30k	SNO/SK experience	

1.4.5.4.2.4 --- None

Contingency & Method

The exact calibration requirements are not yet known and expected to be the result of WBS 1.4.5.4.1.1 and 1.4.5.4.2.1. It is quite possible that additional sources not yet included in the baseline design will be required. Hence, the cost risk has a large value. The values in the above table represent the largest values in each category from the risk tables for the WBS at level 5.

Assumptions
Funds are available in FY11 to begin work on the accelerator/muon study and development of an energy calibration strategy.

1.4.5.4.1.1 It is assumed that modest travel funds (~$2k) can be secured through the project for the post-doc to travel to a collaboration and/or analysis meetings to present results and participate in discussions.

1.4.5.4.2.1 It is assumed that travel funds (~$1k) can be secured through the project for the post-doc to travel to a collaboration and/or analysis meetings to present results and participate in discussions.

1.4.5.4.2.2 It is assumed that prototyping of source containers will only be done for the most critical calibration sources.

Assumptions/Interfaces

Constraints

Comments

130.04.05.04 Energy Calibration

WBS LEVEL 5	ACTIVITY ID	ACTIVITY DESCRIPTION	START DATE	FINISH DATE	DURATION	RESOURCE	HOURS	COST	TOTAL with Escalation
130.04.05.04.01 High-energy cal	CL1870	HE Calibration Accelerator/Muon Trade	1/11/2010	1/26/2011	261	BNL M&S CE Costs		1,999	1,999
						BNL M&S CE from LS: Post Doc	1,999	85,921	86,597
		HE Calibration Accelerator/Muon Trade Study Total					1,999	87,920	88,596
130.04.05.04.01 High-energy calibration (100 MeV- ~1 GeV) Total							**1,999**	**87,920**	**88,596**
130.04.05.04.02 Low Energy Cal	CL1900	Calibration Strategy and Source down s	6/2/2011	6/3/2013	499	BNL M&S CE Costs		998	1,030
						BNL M&S CE from LS: Post Doc	998	42,890	44,304
		Calibration Strategy and Source down select Total					998	43,888	45,333
	CL1910	Preliminary and Final Design: Source, C	6/4/2013	1/22/2018	1176	BNL M&S CE Costs		135,000	152,329
		Preliminary and Final Design: Source, Container an Total						135,000	152,329
	CL1920	Source Production-Labor	1/22/2018	2/15/2021	800	BNL M&S CE from LS: Electrical Technician	4,504	193,564	237,831
						BNL M&S CE from LS: Mechanical Engineer	5,000	358,190	440,107
						BNL M&S CE from LS: Mechanical Technician	6,000	219,960	270,264
						BNL M&S CE from LS: Uncosted Grad Student	15,000		
						BNL M&S CE from LS: Uncosted Physicist/Scientist	3,504		
						BNL M&S CE from LS: Uncosted Post Doc	6,000		
		Source Production-Labor Total					40,008	771,714	948,202
	CL1930	Software for Energy Calibration	6/4/2013	7/20/2020	1827	BNL M&S CE from LS: Uncosted Grad Student	5,006		
		Software for Energy Calibration Total					5,006		
	CL1911	Preliminary and Final Design: Source, C	6/4/2013	1/22/2018	1176	BNL M&S CE from LS: Mechanical Engineer	8,506	609,344	676,238
						BNL M&S CE from LS: Mechanical Technician	8,506	311,826	346,058
						BNL M&S CE from LS: Uncosted Grad Student	5,000		
						BNL M&S CE from LS: Uncosted Physicist/Scientist	1,353		
						BNL M&S CE from LS: Uncosted Post Doc	10,000		
		Preliminary and Final Design: Source, Container an Total					33,365	921,170	1,022,295
	CL1921	Source Production-Material	1/22/2018	2/15/2021	800	BNL M&S CE Costs		250,000	312,292
		Source Production-Material Total						250,000	312,292
130.04.05.04.02 Low Energy Calibration Total							**79,377**	**2,121,772**	**2,480,452**
Grand Total							**81,376**	**2,209,692**	**2,569,048**

	LBNE Water Cherenkov Detector **BASIS of ESTIMATE FORM (BoE)**	**Date of Estimate: 7/20/2011** **Revision #: 5** **Prepared By: J. Maricic/ C. Lane/ G. Sinnis** **Approved By:** **Level 2 Manager**

WBS Number: **130.04.05.05**	**WBS Title:** **Particle Vertex and ID Calib.**

WBS Dictionary:

This WBS element covers requirements specifications, conceptual design, interfaces, engineering development, fabrication, installation and commissioning of systems to calibrate vertex resolution uncertainty, pointing direction uncertainty and particle identification efficiency.

Cost Type **(check all that apply):** _X_ EDIA Material _X_ EDIA Labor ___ MFG Material ___ MFG Labor	**Costing Method** **(check all that apply):** ___ Engineering Judgment _X_Physicist Estimate ___ Level of Effort ___ Vendor Quote (attached) ___ Catalog Price (specify) ___ Prior purchase _X_ Prior experience ___ Parametric Estimate ___ Other- Description:_____

Attach Relevant Documents (including but not limited to):

M&S Contingency (%)**: 34%**	**Labor Contingency** (%)**: 40%**

Basis of Estimate
Details of Estimate: There are two independent devices that will be developed: 1) Cherenkov Simulating Light Pulser (CSLP) - this device will generate single and multiple cone light patterns to verify detector's performance in terms of particle identification efficiency and vertex resolution. This is especially important in the case of pi0 identification calibration. 2) Monte Carlo simulation of the various radioactive sources for the purpose of vertex resolution calibration with a special emphasis on the low energy regime where resolution is particularly affected by level of photocoverage and use of light concentrators (either Winston cones or WLS plates). Labor Details 1.4.5.5.1.1. For the CSLP, the primary tasks are to advance the CSLP design, test design concepts in small-scale mock-ups, produce and test prototypes, and compare results to Monte Carlo simulations. UC Irvine group, in collaboration with collaborator from Institute for Cosmic ray Research in Tokyo, has been developing cone generator for the last 5 years with the goal of simulating pi0's in T2K and SuperKamiokande. While we may benefit and may be able to build upon their experience, the design of the WCD and consequently calibration needs of the WCD are very different: lower PMT coverage and use of light concentrators will place different and likely more stringent design requirements on CSLP. Monte Carlo design of the CLSP will be implemented in the full water Cherenkov simulation to study effects such as vertex reconstruction and particle identification and drive the design requirements necessary for the calibration. This work will be performed by a postdoc under the supervision of a senior scientist. In order to realize a CD-2 level design for the CSLP and its interface with the calibration device a mechanical engineer is necessary. After CD-2 a student will test the CSLP, perform simulation work, and integrate the CSLP into the WCD. The graduate student and a postdoc will also work on the Monte Carlo simulations of various radioactive sources for the purpose of vertex resolution calibration with emphasis on the low energy range. The primary tasks are to simulate the source interactions for various candidates and select suitable candidates for vertex resolution calibration. 1.4.5.5.1.2. Validation study of the use of naturally occurring events (such as cosmic-ray muons) in the detector for vertex resolution and particle identification. This will be studied by the postdoc using Monte Carlo simulations of the WCD (i.e. WCsim). While it is very attractive to use naturally occurring events for calibration since they come for free, depth of WCD at DUSEL, affects the muon rate and therefore may have limited power for the calibration purposes. Dedicated simulations with WCSim are needed to verify how well we can use naturally occurring events for vertex resolution validation and particle identification efficiency. 1.4.5.5.1.3. The postdoc will also perform a detailed study to assess impact of placing light collectors on the LBNE WCD PMTs on the vertex resolution and particle id efficiency of the LBNE WCD. Two different designs, that are under study have very different characteristics and potential issue for particle ID and vertex resolution: WLS plates provide rather uniform angular response, but introduce certain amount of late light into detector, while Winston cones boost the fraction of directly collected light, but introduce certain level of non-uniformity in the detector's angular response. With the use of light collectors in the baseline design it is important to study their impact on vertex resolution and particle id efficiency and to investigate if certain

deployment strategies can improve the detector response. While the main advantage of using light collectors is in the low energy regime, we must verify that vertex resolution and particle ID are not negatively affected in the high energy regime as well. The study must be performed for both types of light concentrators that are under considerations, since their impact is very different. We must determine the impact of things such as LCs with a specific orientation, varying opening angle as a function of PMT position, partial Winston cones in the detector corners (to avoid obstructed view for the corner PMTs), varying size, interface point and decay constant for WLS plates.

Material Details

1.4.5.5.1.1 $75k The Cherenkov Simulating Light Pulser (CSLP) is envisioned as a battery operated light pulser that emits single or multiple light cones with tunable light intensity, light cone direction, cone opening, thickness of the cone envelope and sharpness of the cone envelope (attached figure boe-1.4.5.5-figure-1.pdf shows a conceptual design of such a pulser). In this way, a CSLP will be able to produce light cones that are similar to those produced electrons and gammas of various energies (different cone opening and fuzziness). Similar devices for the calibration of neutral pion decay identification algorithms are under development for use in Super-Kamiokande and the T2K experiment (independently by University of California Irvine and Institute for Cosmic Ray Research in Tokyo), with preliminary tests performed for the UCI cone generator in the 1~kton K2K detector. This project has been running for 5 years and has already cost around $100k (a lot of cost was in the precision machining), with a lot of progress but not a final design yet. The attached figure boe-1.4.5.5-figure-2.pdf shows one prototype ICRR pulser. While we expect to build upon experience from our colleagues, design considerations for CSLP are different for several reasons: we use light concentrators and we have very different photocoverage, different sensitivity goals, which puts more stringent calibration requirements in WCD compared to SuperK. Physicist estimate, based on the input from UC Irvine group and prototype design of Double Chooz/KamLAND optical position finder, with significant modification of optics. Our estimate is 25% lower than input we got from UCIrvane, since we intend to build upon their experience and therefore will be able to reduce the cost. The ability to accurately simulate the light cones will help us to understand the systematic uncertainties in the particle id efficiencies of the LBNE WCD.

Contingency & Method

Assumptions

Design Status and Basis of Risk Estimate: Preliminary design, rough sketches. The optical components are standard, off-the-shelf items, but how they are integrated is custom. Custom design and machining is required for non-optical components. Electronics and encapsulation very similar to previous designs. This system is not a prerequisite for other components.

Assumptions/Interfaces

Constraints

Comments

130.04.05.05 Particle Vertex and ID Calib.

WBS LEVEL 5	ACTIVITY ID	ACTIVITY DESCRIPTION	START DATE	FINISH DATE	DURATION	RESOURCE	HOURS	COST	TOTAL with Escalation
130.04.05.05.01 High-energy Pa	CL1960	Cherenkov generating light pulser	5/13/2019	5/12/2022	784	BNL M&S CE Costs		43,998	56,844
						BNL M&S CE from DR: Mechanical Technician	502	16,714	21,241
						BNL M&S CE from DR: Uncosted Grad Student	5,998		
						BNL M&S CE from DR: Uncosted Post Doc	6,499		
						BNL M&S CE from DR: Travel		30,803	39,797
		Cherenkov generating light pulser Total					12,999	91,515	117,882
	CL1970	Naturally Occurring Events	6/25/2018	6/22/2021	782	BNL M&S CE from IS: Uncosted Grad Student	751		
						BNL M&S CE from IS: Uncosted Physicist/Scientist	149		
						BNL M&S CE from IS: Uncosted Post Doc	1,150		
						BNL M&S CE from IS: Travel		29,599	37,351
		Naturally Occurring Events Total					2,049	29,599	37,351
130.04.05.05.01 High-energy Particle vtx and ID		**(>= 100 MeV) Total**					**15,048**	**121,114**	**155,233**
Grand Total							**15,048**	**121,114**	**155,233**

Conceptual design of Cherenkov simulating light pulser

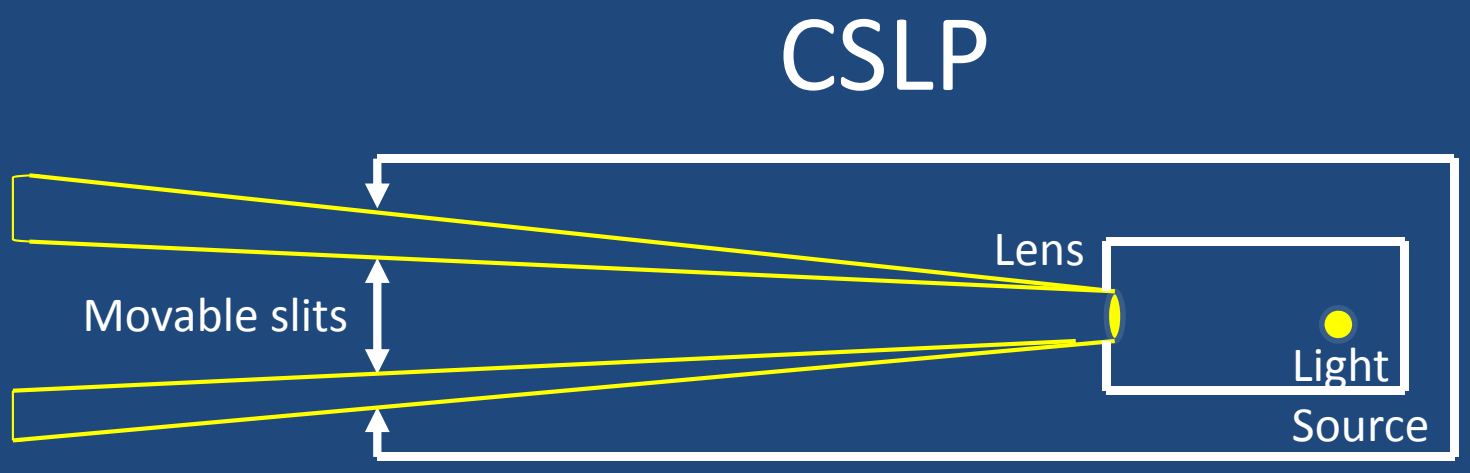

Cherenkov like cone and ring

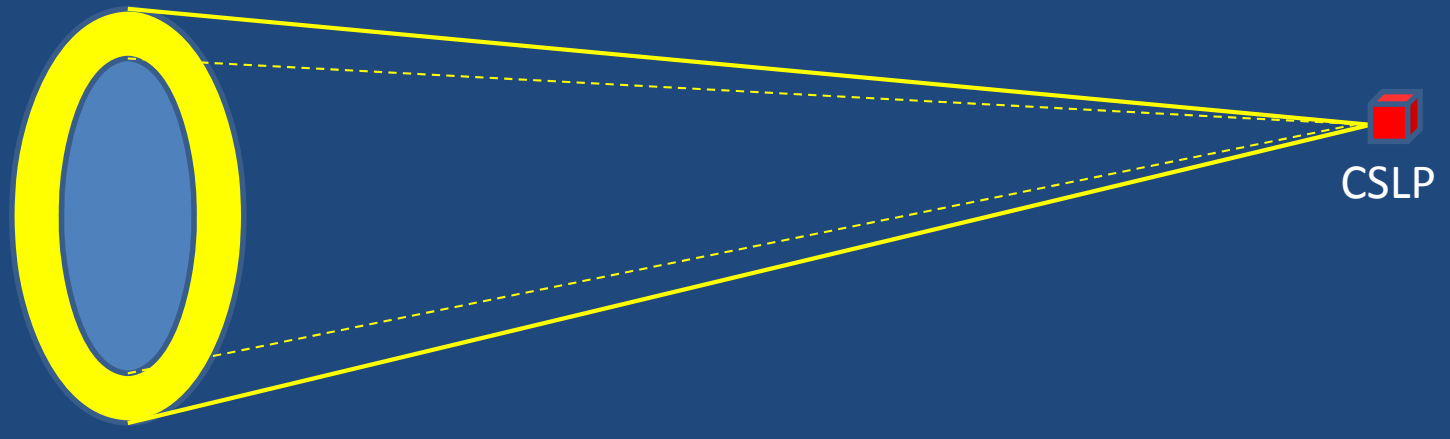

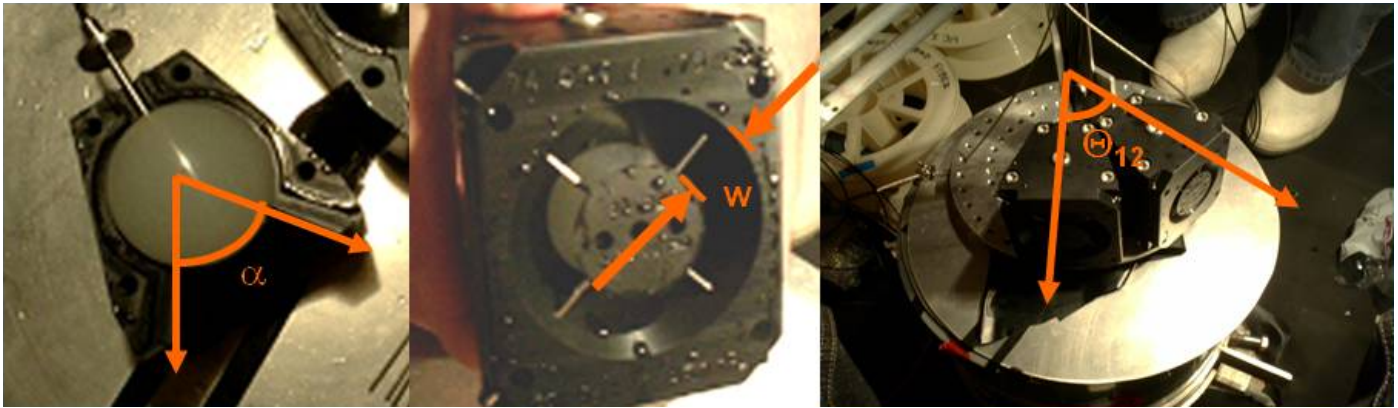
α
w
Θ12

	LBNE Water Cherenkov Detector **BASIS of ESTIMATE FORM (BoE)**	**Date of Estimate: 7/20/2011** **Revision #: 5** **Prepared By: R. McTaggart/ X. Bai / G. Sinnis** **Approved By:** **Level 2 Manager**

WBS Number: **130.04.05.07**	**WBS Title:** **Environmental Monitoring**

WBS Dictionary:

This WBS element covers the requirements specification, conceptual design, engineering development, fabrication, installation, integration and commissioning of the system that monitors the environment within the detector volume. This will be an interface with the slow control group.

Cost Type **(check all that apply):** _X_ EDIA Material _X_ EDIA Labor _X_ MFG Material ___ MFG Labor	**Costing Method** **(check all that apply):** ___ Engineering Judgment _X_Physicist Estimate ___ Level of Effort ___ Vendor Quote (attached) ___ Catalog Price (specify) _X_ Prior purchase _X_ Prior experience ___ Parametric Estimate ___ Other- Description:_____

Attach Relevant Documents (including but not limited to):

M&S Contingency (%)**: 16%**	**Labor Contingency** (%)**: 20%**

Basis of Estimate
Details of Estimate: The tasks in this WBS element cover the monitoring of the environment within the WCD. This includes the selection, procurement, and installation of a network of sensors to measure the temperature, level, and TDS of the water volume and the circulation pattern within the detector. A program to measure any biologics within the detector volume, and the development of a system to measure the radon content of the water. For CD-2 we will have: completed the selection of the sensors that will be deployed (and their placement within the water volume), devised a sampling method for biologics, completed a preliminary design of a high sensitivity Radon detector. After CD-2 we will procure and deploy the sensors within the WCD volume and construct and install the Radon detector. Labor Details 1.4.5.7.1.1 95k Labor in this task is associated with developing a biologic lab capable of measuring the growth rate of the microbes present at Homestake as a function of ambient temperature. This will involve a scientist at SDSU and a graduate student. 1.4.5.7.1.2 Water samples will be taken from the water volume and sent to an external laboratory for testing for biologics. After CD-3 the scientist and graduate student will study potential microbes and locate a suitable laboratory for completing the sampling work. After installation samples will be taken from the detector and sent out for characterization. 1.4.5.7.2.1 The labor is associated with the selection procurement and testing of the sensors needed to measure the water level, temperature, and TDS (including the development of the software to read these sensors and transmit the data to the LBNE database). 1.4.5.7.2.2 The expected flow rate within the WCD volume is quite low and most likely dominated by convection within the water volume. The development of a method to measure this flow will require some preliminary design work prior to CD-2, this includes a scientist at SDSU. Once developed work will be required beginning before CD-3 to complete the development of a system to measure the flow pattern and deploy an array of sensors. This will include external testing to verify the performance of the system. 1.4.5.7.2.3 After CD-2 scientist and graduate student at SDSM&T will spend time in Japan to collaborate with SuperK effort and learn technology for Radon detector (off project funds). SuperK has an existing Rn detector with sensitivity of 1 mBq/m^3. If we do not exercise the Gd option this detector will be sufficient to meet the need of LBNE WCD. In this scenario it will still take significant effort to understand their detector design and build an LBNE version. We estimate one university faculty (off project) at 1/3 FTE, one graduate student (at ½ FTE), and one Mechanical Tech (on project) at 1/6 FTE for 5 years to work with the Japanese, design an LBNE specific system (including interfaces to the WCD volume), design an extraction system, build and test a prototype in the lab, and design/build a final system for LBNE. (This option is what is costed in the BOE.) If we exercise the Gd option we require roughly 3-4 more years of effort to improve the sensitivity of the system by roughly an order of magnitude. After beneficial occupancy we will build and install the complete Rn detection system at LBNE WCD, including the system for water extraction. Technician support is required for construction and installation of system. 1.4.5.7.3 Graduate student (off project) design system and schedule for magnetic field measurement prior to beneficial occupancy of the cavern. After beneficial occupancy a student and technician are needed to perform magnetic field measurement prior to and after the installation of compensating coils in the WCD cavern.

Material Details
1.4.5.7.1.1 95k This requires a fermenter for biological growth studies at a cost of 50k (catalog price). In addition roughly 15k/year for 3 years is needed for miscellaneous lab equipment. Travel costs of 5k/year (3 years) are for trips to the DUSEL site for sample collection (will be paid off project). Off project funds are being sought for this work. (This item has been removed through value engineering.)
1.4.5.7.1.2 25k in materials is an estimate of the cost to characterize multiple samples from the LBNE WCD by an outside laboratory. This is a crude estimate as we do not know how many samples we will take from the detector or the sampling frequency. The latter will depend upon the first results - if biologics are found the sampling frequency will be higher than if no biologics are found.
1.4.5.7.2.1 60k These costs are based on catalog prices for temperature, pressure, and TDS sensors that meet the requirements (including precision and survivability in the LBNE environment). We envision purchasing a few pressure and TDS sensors (~5) and a larger number of temperature sensors (~20). Travel costs are for travel to the site to deploy the sensors.
1.4.5.7.2.2 30k Materials estimates based on an array of sensors (~30) deployed throughout the WCD volume. Sensor technology based upon heat injection and tracking. We will investigate other methods prior to CD-2.
1.4.5.7.2.3 286k + 40k consumables + 25k Travel Materials estimate is based on existing Rn detection technology for SuperK (roughly ½ the materials cost). Development will be performed on this system to achieve order of magnitude increase in sensitivity. Estimate cost as roughly equivalent additional amount. Detailed materials list/cost given below (catalog prices). Extended travel to Kobe University in Fy12 (first year) to work with Japanese system. Several follow-up trips to Japan between FY13-FY16. Note non-project funds are being pursued for some of this work. If successful work would begin in FY11.
1.4.5.7.3 15k + 10k travel Catalog prices for Hall probes ($2069 ea. + $148 brass cover + $473 for 30 m calibrated extension cable + $213 probe stand = 2.9k each) cost of 5 probes + reference magnet ($200) for calibration. Price is for a 3-axis probe from Lakeshore. Travel to LBNE site for technician (5 trips/year at 1k per trip) 10k total.

3.1 A prototype Rn monitor for air and water at SDSM&T for R&D and training:

Description	Quantity	Unit price	Total Price (US $)
1. Amplifier (type 5537)	1	$1,833.00	$1,833.
2. Power supply cable	2	$9.00	$18.
3. Cable LEMO-LEMO	2	$56.00	$112.
4. Socket 5pin DIN(type 6083)	2	$3.00	$6.
5. Branch cable SHV	2	$75.00	$150.
6. Connector	2	$25.00	$50.
7. Connector	2	$30.00	$60.
8. LEMO cable	1	$72.00	$72.
9. SHV cable	1	$194.00	$194.
10. DIN connector cable	1	$216.	$216.
11. Shaper type 4429	1	$4,222.00	$4,222.
12. Amplifier power supply	1	$4,166.00	$4,166.
13. 8ch distributor (type 6084)	1	$121.00	$121.
14. High-pressure power supply	1	$4,500.00	$4,500.
15. Dew point meter	1	$4,422.00	$4,422.
16. USB cable	1	$444.00	$444.
17. Air circulation pump	1	$1,100.00	$1,100.

18. Pressure gauge	1	$266.00	$266.
19. Filter 0.5-micron	1	$277.00	$277.
20. Mass flow controller	1	$4,666.00	$4,666.
21. Control unit (PE-D20)	1	$1,000.00	$1,000.
22. Connecting cable	1	$200.00	$200.
23. Stainless container	1	$15,250.00	$15,250.
24. PIN photo-diode	2	$390.00	$780.
25. Ceramic feed-through	2	$58.00	$116.
26. Stainless/CU pipes:			$581.
27. Connectors			$5,550.
28. Vacuum pump & gauge	1	$15,110.	$15,110.
29. water pumps	2	$2325.	$4,651.
30. flow controllers	3	$1937.	$5,810.
31. Gas extraction unit			$11,110.
32. vapor traps			$3,488.
33. cooler and dewar	2	$11628.	$23,255.
34. Misc. tools			$20,500.
35.Shipping			$6097
Total			$140,393

Note: The DAQ system (ADC, DAQ system and a PC) for the prototype at SDSM&T will be provided by SDSM&T.

3.2 A Rn monitor in water of LBNE at DUSEL:

Description	Price (US $)
1. One Rn monitor system similar to the prototype at SDSM&T	$140,393.75
2. Water sample tube	$348.00
3. Piping (stainless steel, copper 1/2 inch & 1/4 inch)	$1,325.00
4. Multiple channel analyzer & cables C)	$3,500.00
Total	$145,566.75

Note: The multiple channel analyzer & cables will be the DAQ for the Rn monitor at LBNE site.

3.3 Other supplies (annual expendables for life of project)

Description	Price (US $/year)
1. Purified air	3,400.00
2. Filters	650.00
3. Sample preparations	6000.00
Total	10,050.00

Contingency & Method

Assumptions/Interfaces

Constraints

Comments

130.04.05.07 Environmental Monitoring

WBS LEVEL 5	ACTIVITY ID	ACTIVITY DESCRIPTION	START DATE	FINISH DATE	DURATION	RESOURCE	HOURS	COST	TOTAL with Escalation
130.04.05.07.01 Biologic Contai	CL2060	Monitor Microbes during construction,	12/4/2019	3/22/2022	600	BNL M&S CE Costs		25,002	32,499
						BNL M&S CE from SD: Uncosted Grad Student	1,002		
						BNL M&S CE from SD: Uncosted Physicist/Scientist	402		
						BNL M&S CE from SD: Travel		4,998	6,497
		Monitor Microbes during construction, commissionin Total					1,404	30,000	38,996
130.04.05.07.01 Biologic Containment Total							**1,404**	**30,000**	**38,996**
130.04.05.07.02 Water Environm	CL2080	Water Level, pH, Temp, TDS, Res	2/8/2019	2/6/2020	260	BNL M&S CE Costs		60,000	74,953
						BNL M&S CE from SD: Uncosted Grad Student	3,999		
						BNL M&S CE from SD: Uncosted Physicist/Scientist	801		
						BNL M&S CE from SD: Travel		10,000	12,492
		Water Level, pH, Temp, TDS, Res Total					4,800	70,000	87,445
	CL2090	Water Flow rate	2/15/2016	4/5/2018	559	BNL M&S CE Costs		30,002	35,150
						BNL M&S CE from SD: Uncosted Grad Student	4,002		
						BNL M&S CE from SD: Uncosted Physicist/Scientist	1,001		
						BNL M&S CE from SD: Travel		4,997	5,855
		Water Flow rate Total					5,003	34,999	41,005
	CL2100	Radon monitoring: R&D and Constructi	10/4/2012	12/4/2020	2090	BNL M&S CE Costs		360,003	419,243
		Radon monitoring: R&D and Construction-Material Total						360,003	419,243
	CL2101	Radon monitoring: R&D and Constructi	6/25/2012	8/7/2020	2075	BNL M&S CE from SD: Mechanical Technician	2,677	66,571	75,661
						BNL M&S CE from SD: Uncosted Grad Student	7,802		
						BNL M&S CE from SD: Uncosted Physicist/Scientist	5,291		
						BNL M&S CE from SD: Travel		62,997	72,751
		Radon monitoring: R&D and Construction-Labor Total					15,770	129,568	148,412
130.04.05.07.02 Water Environment Total							**25,573**	**594,569**	**696,105**
130.04.05.07.03 Magnetic Field	CL2110	Magnetic Field Measurement	12/28/2018	12/29/2021	784	BNL M&S CE Costs		25,002	31,986
						BNL M&S CE from SD: Mechanical Technician	1,004	24,958	31,408
						BNL M&S CE from SD: Uncosted Grad Student	2,673		
						BNL M&S CE from SD: Travel		14,998	19,188
		Magnetic Field Measurement Total					3,677	64,957	82,582
130.04.05.07.03 Magnetic Field Measurement Total							**3,677**	**64,957**	**82,582**
Grand Total							**30,654**	**689,526**	**817,683**

LBNE	**LBNE Water Cherenkov Detector** **BASIS of ESTIMATE FORM (BoE)**	**Date of Estimate: 20-July-2011** **Revision #: -** **Prepared By: Jack Fowler** **Approved By:** **Level 2 Manager**

WBS Number: **130.04.06.01**	**WBS Title:** **Water System Management and Safety**

WBS Dictionary:

This element includes the general management and oversight of the water system. Included are activities related to the management and administration to ensure that design, procurement, and construction activities meet the project goals and that work is done in accordance with DOE Cost, Schedule and Technical Guidelines.

Cost Type **(check all that apply):** _*_ EDIA Material _*_ EDIA Labor ___ MFG Material ___ MFG Labor	**Costing Method** **(check all that apply):** _*_ Engineering Judgment _*_Physicist Estimate ___ Level of Effort ___ Vendor Quote (attached) ___ Catalog Price (specify) ___ Prior purchase _*_ Prior experience ___ Parametric Estimate ___ Other- Description:_____

Attach Relevant Documents (including but not limited to):

M&S Contingency (%)**: 10%**	**Labor Contingency** (%)**: 20%**

Basis of Estimate

Details of Estimate:

This estimate includes the costs for project oversight and management by the L3 manager with issues concerning the specific subsystem. This oversight and management includes biweekly system meetings, cost and schedule reviews, coordination, and the elements of safety planning and ES&H. The L3 manager will provide cost estimates, schedules, and monthly financial and technical reports. This is estimated as 15 % of one FTE. Also included are the travel costs for 2 reviews per year and 2 collaboration meetings per year.

There are two off project faculty members that will work closely with the L3 manager to ensure the system is capable of meeting the physics goals of the experiment. Their participation will be required for many of the tasks listed above as well as the reviews. Since they are off project, there is no labor reflected in the cost estimates. The time estimated for each is 5 % of one FTE. There is some travel costs for attending meetings and reviews for one of the members. This includes travel costs for 2 reviews per year and 2 collaboration meetings per year.

Also, included in this estimate is a small amount for incidental expenses incurred. This includes software licenses, conferencing equipment and fees, and other unforeseen items. This is $500.00 per year.

Labor Details

Table 1 provides detail of the labor hours by job function from Preliminary Design (FY11) through installation (FY22) for project management and safety of the Water System. Hours are also shown for off project faculty, but no costs are incurred.

Assumptions/Interfaces

Our current design philosophy for the water system it to leave the design at the conceptual level until the schedule drives action. The reasoning being that the requirements for the water quality are well understood from previous experiments, the equipment is commercial in nature and widely used in industry, one current potential vendor has installed similar systems for other WCD, and is actively working with LBNE institutes to define the Gadolinium separation equipment for other experiments. In order to sustain the design, we will closely monitor the interfaces with the other sub-systems and conventional facilities. Before each CD review, we will have water system design review to ensure the proper interfaces and coordination is maintained.

This estimate assumes that two off project faculty members are available to assist in the management and reviews of the water system.

Constraints

Comments

Early in the project, a Value Engineering proposal VE-WCD-003 was submitted. This proposal was to replace LLNL with university labor to manage the water system. This proposal was accepted and the management was assigned to Duke University and University of California-Irvine. Before this change was made, 2580 hours and approximately $640,000.00 in costs were incurred. These are included in the labor costs and hours of this BOE.

Risks

This estimate relies on two off project faculty members being available to assist in the management and reviews.

130.04.06.01 Water System Management and Safety

WBS LEVEL 5	ACTIVITY ID	ACTIVITY DESCRIPTION	START DATE	FINISH DATE	DURATION	RESOURCE	HOURS	COST	TOTAL with Escalation
130.04.06.01 Water System Mar	WS1410	Conceptual Design and CD-1	1/11/2010	5/3/2012	580	BNL M&S CE Costs		2,401	2,417
						BNL M&S CE from DK: Mechanical Engineer	267	18,471	18,835
						BNL M&S CE from DK: Uncosted Physicist/Scientist	133		
						BNL M&S CE from IR: Uncosted Physicist/Scientist	133		
						BNL M&S CE from LL: Administrative Support	209	23,390	23,850
						BNL M&S CE from LL: Post Doc	307	33,992	34,661
						BNL M&S CE from LL: Sr. Mechanical Engineer	1,839	508,263	518,257
						BNL M&S CE from DK: Travel		5,997	6,038
						BNL M&S CE from IR: Travel		5,997	6,038
						BNL M&S CE from LL: Sr. Scientist	226	79,061	80,616
		Conceptual Design and CD-1 Total					3,115	677,573	690,710
	WS1420	Preliminary Design and CD-2	5/4/2012	6/20/2013	282	BNL M&S CE Costs		1,500	1,567
						BNL M&S CE from DK: Mechanical Engineer	265	18,352	19,002
						BNL M&S CE from DK: Uncosted Physicist/Scientist	90		
						BNL M&S CE from IR: Uncosted Physicist/Scientist	90		
						BNL M&S CE from DK: Travel		8,999	9,400
						BNL M&S CE from IR: Travel		8,999	9,400
		Preliminary Design and CD-2 Total					446	37,850	39,369
	WS1430	Final Design and CD-3B	6/21/2013	1/30/2015	399	BNL M&S CE Costs		2,198	2,383
						BNL M&S CE from DK: Mechanical Engineer	459	31,767	33,869
						BNL M&S CE from DK: Uncosted Physicist/Scientist	223		
						BNL M&S CE from IR: Uncosted Physicist/Scientist	223		
						BNL M&S CE from DK: Travel		7,501	8,132
						BNL M&S CE from IR: Travel		7,501	8,132
		Final Design and CD-3B Total					906	48,968	52,516
	WS1440	Procurement, Construction, and Installa	2/2/2015	4/22/2022	1874	BNL M&S CE from DK: Mechanical Engineer	2,080	144,014	173,070
		Procurement, Construction, and Installation Total					2,080	144,014	173,070
130.04.06.01 Water System Management and Safety Total							**6,546**	**908,405**	**955,665**
Grand Total							**6,546**	**908,405**	**955,665**

LBNE	**LBNE Water Cherenkov Detector** **BASIS of ESTIMATE FORM (BoE)**	**Date of Estimate: 20-July-2011** **Revision #: -** **Prepared By: Jack Fowler** **Approved By:** **Level 2 Manager**

WBS Number:	**WBS Title:**
130.04.06.02	**Fill System**

WBS Dictionary:

This WBS Element covers the design, fabrication, and delivery of the Water Fill System for the WCD. The Water Fill System treats local industrial water from the Lead-Deadwood Sanitary District for the WCD. This will be used during the initial fill and also will add makeup water as necessary. Tasks included under this WBS element will bring the physics requirements and engineering specifications to maturity, and complete the design drawings, engineering analysis, interface specifications, and safety and risk assessments. The process will include at a minimum Conceptual, Preliminary, and Final Design. Final design will be followed by procurement and fabrication of the water fill system. Fabricated parts will be shipped directly to the installation warehouse.

Cost Type **(check all that apply):**	**Costing Method** **(check all that apply):**
_*_ EDIA Material _*_ EDIA Labor _*_ MFG Material _*_ MFG Labor	_*_ Engineering Judgment _*_Physicist Estimate ___ Level of Effort _*_ Vendor Quote (attached) ___ Catalog Price (specify) ___ Prior purchase _*_ Prior experience ___ Parametric Estimate ___ Other- Description:_____

Attach Relevant Documents (including but not limited to):

M&S Contingency (%)**: 10%**	**Labor Contingency** (%)**: 25%**

Basis of Estimate

Details of Estimate:

In this estimate, we include all tasks related to the specification, design, and procurement of the surface fill system. Also included are the engineering costs to integrate the design with the conventional facilities at the far site. Specifically, this will be detailed interface documents and drawings, material specifications, QC requirements, infrastructure required, and environmental considerations.

The cost for the equipment, shipping to the LBNE warehouse, piping and electrical interconnects within 10' of the equipment, and actual installation is included in the vendor estimate. A copy of the estimate will be provided with this document. Also provided is the Water Treatment Design Option report. This details all of the equipment, controls, and materials that are proposed for the system. A high level breakdown of the costs for the fill system is below.

Fill system equipment	$2,380,000.00
Expendables during fill	$700,000.00
Instrumentation and Controls	$110,000.00
Piping ,Electrical, and Install	$505,000.00
Delivery to Homestake	$30,000.00
Start up	$25,000.00
TOTAL	$3,750,000.00

Not included in this estimate are the costs for conventional facilities. These would include the cost to ready the installation site, MEP infrastructure, supply piping to the system, distribution piping to the detector, waste water sumps or piping, and any costs associated with the waste water treatment system.

Equipment costs are based on a vendor quotation. This vendor has supplied similar equipment to other experiments and is currently supplying many of the institutes with small water systems for testing purposes.

Labor Details:

Table 1 provides detail of the labor hours by job function from Preliminary Design (FY11) through installation (FY22) for the Fill System WBS of the Water System.

Engineering hours are estimated at 15 % of a FTE for FY 11 through 14. These increase to 30% in FY 15 through the delivery of the equipment. This is currently estimated in FY-20, however, if the need for the system is sooner these outer year costs will be reallocated.

Through FY12 through FY20, we are allotting time for an off project faculty member. This is estimated at 15% FTE. The off project faculty members have worked on previous WCD detectors and their knowledge and experience is crucial to the successful delivery of a working system. There is no labor costs associated with their hours.

Assumptions/Interfaces:

Our current design philosophy for the water fill system is to leave the design at the conceptual level until the schedule drives action. We currently anticipate the first use of the fill system will be to produce water for washing down the detector, after the liner has been installed prior to PMT installation. In order to sustain the design, we will closely monitor the interfaces with the other sub-systems and conventional facilities. Before each CD review, we will have water fill system design review to ensure the proper interfaces and coordination is maintained. The main interface with the fill system is with the conventional facilities group. These interfaces will be closely monitored as the far site progresses before the system is installed.

This estimate assumes that the system will be installed in the Yates crusher room. Conventional facility is responsible for the necessary infrastructure needed in this area. The room will be refurbished to the level necessary to house the equipment and expendable materials and to keep them from protected from the elements, particularly freezing. All electrical and plumbing interfaces will be available to within 10 feet of the equipment placement. Drainage sumps to capture the water rejected by the softeners, and RO will be installed and plumbed to the waste water treatment system. This system will be able to accommodate a continuous stream of 50 gpm 24 hours per day, and an additional 300 gpm for 6 hours per day. Industrial water will be plumbed to the system and be capable of providing 300 gpm continuously, and an additional 300 gpm for 6 hours per day to flush the softener system. Also, all of the necessary fire and life safety equipment will be installed. A 10,000 gallon brine tank or pit will be located near the system.

This estimate assumes that off project faculty members are available to assist in the design and procurement effort of the system. There is no labor costs associated with these personnel.

Comments:
Included in the vendor estimate are the costs for consumables for the detector fill. This is estimated at $700,000.00 of the total $3,750,000.00 shown for the fill system.

130.04.06.02 Fill System

WBS LEVEL 5	ACTIVITY ID	ACTIVITY DESCRIPTION	START DATE	FINISH DATE	DURATION	RESOURCE	HOURS	COST	TOTAL with Escalation
130.04.06.02 Fill System	WS1490	Value Engineering	3/2/2011	6/6/2011	68	BNL M&S CE from LL: Mechanical Engineer	68	13,960	14,337
		Value Engineering Total					68	13,960	14,337
	WS1500	Interface Documents	6/7/2011	9/8/2011	65	BNL M&S CE from DK: Mechanical Engineer	136	9,405	9,659
						BNL M&S CE from LL: Post Doc	83	9,200	9,449
		Interface Documents Total					219	18,606	19,108
	WS1510	Integration Plan and Conventional Facil	6/7/2011	12/21/2011	135	BNL M&S CE from DK: Mechanical Engineer	136	9,440	9,714
		Integration Plan and Conventional Facilities Total					136	9,440	9,714
	WS1520	Prepare for Director's Review and CD-1	12/22/2011	2/21/2012	40	BNL M&S CE from DK: Mechanical Engineer	34	2,354	2,429
		Prepare for Director's Review and CD-1 Review Total					34	2,354	2,429
	WS1530	CD-1 Review	3/30/2012	4/3/2012	3	BNL M&S CE from DK: Mechanical Engineer	7	484	499
		CD-1 Review Total					7	484	499
	WS1540	Monitor Design/Interfaces/Integration	4/4/2012	3/14/2013	235	BNL M&S CE from DK: Mechanical Engineer	270	18,710	19,356
						BNL M&S CE from IR: Uncosted Physicist/Scientist	270		
						BNL M&S CE from DK: Travel		3,001	3,121
						BNL M&S CE from IR: Travel		3,001	3,121
		Monitor Design/Interfaces/Integration through CD-2 Total					541	24,712	25,598
	WS1550	Interim Review before CD-2	5/10/2013	5/14/2013	3	BNL M&S CE from DK: Mechanical Engineer	68	4,709	4,884
		Interim Review before CD-2 Total					68	4,709	4,884
	WS1560	CD-2 Review	6/12/2013	6/14/2013	3	BNL M&S CE from DK: Mechanical Engineer	7	484	502
		CD-2 Review Total					7	484	502
	WS1570	Monitor Design/Interfaces/Integration	6/17/2013	7/31/2014	280	BNL M&S CE from DK: Mechanical Engineer	319	22,099	23,379
						BNL M&S CE from IR: Uncosted Physicist/Scientist	319		
						BNL M&S CE from DK: Travel		2,999	3,226
						BNL M&S CE from IR: Travel		2,999	3,226
		Monitor Design/Interfaces/Integration through CD-3 Total					638	28,097	29,830
	WS1580	Interim Review before CD-3B	8/1/2014	8/5/2014	3	BNL M&S CE from DK: Mechanical Engineer	102	7,062	7,523
		Interim Review before CD-3B Total					102	7,062	7,523
	WS1590	CD-3B Review	9/24/2014	9/26/2014	3	BNL M&S CE from DK: Mechanical Engineer	7	484	516
		CD-3B Review Total					7	484	516
	WS1600	Final Design/Interfaces/Integration	9/23/2013	6/12/2017	941	BNL M&S CE from DK: Mechanical Engineer	1,524	105,540	116,677

	WS1600	Final Design/Interfaces/Integration	9/23/2013	6/12/2017	941	BNL M&S CE from IR: Uncosted Physicist/Scientist	1,382		
						Electrical Engineer P2	197	11,427	16,738
						BNL M&S CE from DK: Travel		7,500	8,430
						BNL M&S CE from IR: Travel		7,500	8,430
		Final Design/Interfaces/Integration Total					3,104	131,967	150,275
	WS1610	Final Design Package and RFQ	6/13/2017	10/16/2017	90	BNL M&S CE from DK: Mechanical Engineer	170	11,776	13,630
						BNL M&S CE from IR: Uncosted Physicist/Scientist	100		
		Final Design Package and RFQ Total					270	11,776	13,630
	WS1620	Award Contract	7/24/2018	7/25/2018	2	BNL M&S CE Costs		3,750,000	4,518,375
		Award Contract Total						3,750,000	4,518,375
	WS1630	Procurement of system	9/13/2018	4/10/2019	150	BNL M&S CE from DK: Mechanical Engineer	300	20,770	25,221
						BNL M&S CE from IR: Uncosted Physicist/Scientist	300		
						BNL M&S CE from DK: Travel		6,000	7,408
						BNL M&S CE from IR: Travel		6,000	7,408
		Procurement of system Total					600	32,770	40,036
	WS1640	Fabrication	9/13/2018	4/10/2019	150	BNL M&S CE from DK: Mechanical Engineer	401	27,728	33,671
						BNL M&S CE from IR: General Labor	401	14,294	17,357
						BNL M&S CE from IR: Uncosted Physicist/Scientist	204		
		Fabrication Total					1,005	42,021	51,028
130.04.06.02 Fill System Total							**6,806**	**4,078,925**	**4,888,284**
Grand Total							**6,806**	**4,078,925**	**4,888,284**

DUSEL WATER TREATMENT PRICING:

Prepared for:

BROOKHAVEN NATIONAL LABORATORY

Job Site:

HOMESTAKE MINE
Lead, South Dakota.

Prepared by:

SOUTH COAST WATER
401 S Santa Fe
Santa Ana, CA. 92705

By:

Roy E. Hall
714.648 2488 ext 13
hall@sch2o.com

Contributors:

Water Temperature Equipment	*Heat Technology* *Glenn Schuelke*
Pumping Equipment	*Pumping Solutions* *Jim Bruce*
PLC Controls	*Gexpro* *John Chang*
CAD Drawings	*Jimmy Baker III*
Ion Exchange Resin	*Sybron Lanxess Lewatit* *Dave Daly* *Tony Decola* *Dewight Tamaki*

Approach to Project:	4
Above Ground Option:	5
Pricing:	6-7
Lead Times:	8
Utilities:	9-10
Consumables:	11

DUSEL Water Treatment Design Options:
Approach to Project.

Approach to Project:

Because the equipment is to be installed at the 4850' level and the limitations of the YATES SUPER-CAGE, We have made the following exception / modifications to proposed equipment:

ALL Vessels, DI, Pretreatment, U/Th have a custom cage and have been sized to fit within limitations of Yates Super Cage.

We have designed the DI and U/Th Vessel to accommodate replacement of Resin using Super Sacs fill and dump.

Reverse Osmosis has been designed to be delivered and reassembled.
Reverse Osmosis pumps are skid mounted and fit within the confines.

Fill Chiller is Air Cooled if Fill Equipment is on the surface.
Recirculation Chillers are Water Cooled not Fan Cooled.

Initially Ultra Filtration and Reverse Osmosis was not selected for use in recirculation systems because the Detectors are self contained and Fill System is shared between Detectors, the waste waters from UF and RO could not be brought back and treated.
However by reducing the waste flow and keeping the Unit specifically to each Detector we have proposed the use of Reverse Osmosis on the recirculation side of the large recirculation system. Recommended recovery rate of RO minimum of 95%.
The water quality of RO waste will be High Quality so recommend using for utility uses.

EDI was not selected because of Venting problems.

DUSEL Water Treatment Design Options:
Options.

Options:

FILL:
Since the design of the FILL System is separate from the Detector Recirculation Systems and the Fill system can be used for multiple Detectors we would like you to consider the following options.

Our recommendation is to install ALL the fill equipment upstairs and feed Detector level with two supply pipes one 6" Stainless steel which would be the water after Chiller, Post DI and one 2" Stainless Steel would be Pretreatment Water after Softeners.

Pretreatment installed above ground.

Advantages:

Easy access to Pretreatment expendable like Salt and Pre Filter Changes.

Example,
Water Softener Salt Needed for fill is 3200 lbs per day.
150kt Detector will need = 358,400 pounds to fill.
200kt Detector will need = 441,600 pounds to fill.

Waste from Pretreatment will not have to be pumped up to surface.
Waste from RO does not have to be pumped up to surface.

Greater Water Supply available allowing for regenerations / backwashing of Pretreatment Equipment while Fill of Detector continues.

Easy access to Ion Exchange Resin Mix Beds.
Change out of Mixed bed Resin is estimated at:
DI ion exchange resin needed to be changed out based on 1 grain loading from Reverse Osmosis Unit:

150kt = 4000 cubic feet, 20 Mixed bed Vessels to be changed out during fill.
200kt = 5000 cubic feet, 25 Mixed bed Vessels to be changed out during fill.

Could explore the use of Exchange Resin instead of replacement. This could save funds expressly if future Detectors are added.
Could explore the use of EDI.
Chiller can be Air Cooled which is much more efficient than water-cooled.

DUSEL Water Treatment Design Options:
Pricing.

Pricing:

Note: South Dakota has sales and excise tax as well as a service / installation tax we Have used 8% for those taxes and have included in equipment pricing and installation. Pricing includes Expendables for 1 Fill of Detector as well as Expendables First year Recirculation.

Equipment.

Pretreatment Equipment:	$ 670,000.00
Reverse Osmosis Equipment:	$ 210,000.00
Post Treatment DI:	$ 2,200,000.00
Total Fill System:	**$ 3,080,000.00**

Optional Recirculation Equipment: (select one add to above)

300 gallons per minute:	$ 1,850,000.00
600 gallons per minute:	$ 2,900,00.00
1200 gallons per minute:	$ 5,800,000.00

Optional Gadolinium Recovery System: (select one add to above)

300 gallon per minute:	$ 495,000.00
600 gallon per minute:	$ 870,000.00
1200 gallon per minute:	$ 1,525,000.00

Instrumentation and Controls: (add to above)

Fill and Recirculation:	$ 110,000.00

DUSEL Water Treatment Design Options:
Pricing.

Piping / Installation:

Piping and installation is Piping and Electrical interconnection only.
Delivery of equipment from surface to equipment site to be by others.
City Supply, Waste, Supply to Detector and Electric to be provided within 10' of Equipment.

Pre Treatment and Reverse Osmosis:		$ 230,000.00
Parts:	$ 157,500.00	
Labor:	$ 72,500.00	
Post DI:		$ 275,000.00
Parts:	$ 231,000.00	
Labor:	$ 44,000.00	
300 gallons per minute Recirculation:		$ 310,000.00
Parts:	$ 266,000.00	
Labor:	$ 44,000.00	
600 gallons per minute Recirculation:		$ 610,000.00
Parts:	$ 552,000.00	
Labor:	$ 58,000.00	
1200 gallons per minute Recirculation:		$ 1,160,000.00
Parts:	$1,078,000.00	
Labor:	$ 82,000.00	

Delivery to Job site:

Delivery includes Inbound and Outbound freight to Job site.
Not included is off loading at site.

Delivery: $ 30,000.00

Job site Start Up:

This include 10 days during Start of Fill and beginning of Recirculation.

Start Up: $ 25,000.00

DUSEL Water Treatment Design Options:
Lead times and Schedules:

RFQ:

Submittals:	45 days

From release of purchase order:

Approvals:	45 days
Equipment Build out:	26 weeks
Delivery to Lead:	4 weeks
Delivery equipment to install sites: (by outfitters)	2 weeks
Set Up and Installation:	
Set Up: (layout and placement)	
Pretreatment and RO Fill System:	1 week
1200 gpm recirculation:	2 week
Install: (plumbing and electrical)	
Pretreatment and RO Fill System:	2 weeks
1200 gpm recirculation:	4 weeks
Start up:	
Pretreatment and RO Fill System:	1 week
1200 gpm recirculation :	1 week

DUSEL Water Treatment Design Options:
Utilities:

Utilities needed:

Supply Water:	600 gallons per minute at 60 psi.
Waste Water:	400 gallon per minute capabilities.

Total Water Use for FILL, includes Pretreatment and RO Waste Water.

	Total Water	Waste Water
150kt:	50,000,000 gallons	10,000,000
200kt:	62,000,000 gallons	12,000,000

Electrical:	Horse power		KW (round up)	AMPS
Reverse Osmosis:	85 hp	460 3 phase	65	82
Actual Motor HP:	125		93	137
Vacuum Pump Degas Fill:	4 hp	460 3 phase	3	4
300 gpm Recirculation:	42 hp	460 3 phase	32	40
Actual Motor HP:	60 hp		45	65
Vacuum Pump Degas :	4 hp	460 3 phase	3	4
600 gpm Recirculation:	73 hp	460 3 phase	55	
Actual Motor HP:	100 hp		75	110
Vacuum Pump Degas :	5hp	460 3 phase	4	5
1200 gpm Recirculation:	142 hp	460 3 phase	106	133
Actual Motor HP:	200 hp		150	216
Reverse Osmosis:	85 hp	460 3 phase	65	82
Actual Motor HP:	125		93	137
Vacuum Pump Degas:	10 hp	460 3 phase	8	
300 gpm Gadolinium:	42 hp	460 3 phase	32	40
Actual Motor HP:	60		45	65
600 gpm Gadolinium:	73 hp	460 3 phase	55	69
Actual Motor HP:	100 hp		75	110
1200 gpm Gadolinium:	142 hp	460 3 phase	106	133
Actual Motor HP:	200 hp		150	216

note: calculating KW used 460 and 110 volts with power factors of 1.73 and .85.

DUSEL Water Treatment Design Options:
Utilities: (cont')

	Volts	Amps	KW
Fill Chiller:			
MXR125 #1	460 3 phase	220 Rated Load Amps	175
Remote Condenser:	460 3 phase	36 Rated Load Amps	29
MXR125 #2	460 3 phase	220 Rated Load Amps	175
Remote Condenser:	460 3 phase	36 Rated Load Amps	29
Recirculation Chiller:			
TSW80A:	460 3 phase	145 Rated Load Amps	158
Chiller Control pump:	460 3 phase	24 Rated Load Amps	20
PLC :	110 volt	10 Rated Load Amps	1
Instrumentation:	110 volt	20 Rated Load Amps	2
Pretreatment Equipment:	110 Volt	10 Rated Load Amps	1
Ultraviolet Sterilizers:	220 volt		
M150:		4.7 Rated Load Amps	1
M250:		7.3 Rated Load Amps	1.5
TOC:	220 Volt		
M150:		4.7 Rated Load Amps	1
M250:		7.3 Rated Load Amps	1.5

DUSEL Water Treatment Design Options:
Consumables.

Items needed to be replaced/used during FILL:				
	150kt Detector	**Cost**	**200kt Detector**	**Cost**
Supply Water gallons:	50,000,000		62,000,000	
Water Softener Salt:	358,400 lbs	$ 21,504	441,600 lbs	$ 26,496
Pre Filters:	144-40” 5 micron	$ 1,728	180-40” 5 micron	$ 2,160
MB Exchange Resin:	4000 cubic feet	$1,000,000	5000 cubic feet	$1,250,000
U/Th Exchange Resin:	800 cubic feet	$ 280,000	800 cubic feet	$ 280,000
Pre Filters:	72- 40” 5 micron	$ 860	72-40” 5 micron	$ 860
Ultraviolet Lamps:	38	$ 7,600	38	$ 7,600
Post Filters:	72- 40” 0.1 micron	$ 18,000	72- 40” 0.1 micron	$ 18,000
TOC Lamps:	19	$ 3,800	19	$ 3,800
Man hours :	400		600	
Total KW:	250		250	
Total hrs:	2667		3334	
Items needed to be replaced/used Recirculation 1st year				
Make Up Water:	1,600,000		2,000,000	

Recirculation Rate:	**300 gpm**	**cost**	**600 gpm**	**cost**	**1200 gpm**	**cost**
MB Exchange Resin:	800cuft	$200,000	1200cuft	$300,000	2400cuft	$600,000
U/Th Exchange Resin:	800cuft	$280,000	1200cuft	$420,000	2400cuft	$840,000
Pre Filters 1 micron:	72- 40”	$864	144-40”	$1728	208-40”	$2496
Ultraviolet Lamps:	12	$2400	24	$4,800	38	$7,600
Post Filters 0.1 micron:	72-40”	$18,000	144-40”	$36,000	208-40”	$52,000
TOC Lamps:	12	$2,400	24	$4,800	38	$7,600
Man hours:	200		280		560	
Total KW: (no Gd)	201		225		282	
Total KW: (Gd)	32		55		106	
Total KW: 1200 gpm RO					65	

DUSEL WATER TREATMENT DESIGN OPTIONS:

Prepared for:

BROOKHAVEN NATIONAL LABORATORY

Job Site:

HOMESTAKE MINE
Lead, South Dakota.

2/10

12/09
DUSEL Water Treatment Design Options:

Index:

Piping and Sizing:	3
Vessel Specifications:	4
Ion Exchange Resin:	5
Motors:	6
Instrumentation and Controls:	7-8
PLC:	9
Membrane Degas:	10
Chillers:	11-15
Pretreatment Equipment. FILL:	16-17
Reverse Osmosis Equipment. FILL:	18
Post Treatment. FILL:	19-21
Detector Recirculation.300 gpm:	22-24
Detector Recirculation. 600 gpm:	25-27
Detector Recirculation, 1200 gpm:	28-30
Gadolinium Recirculation / Recovery:	**31**
Gadolinium Recirculation / Recovery 300 gpm:	**32-33**
Gadolinium Recirculation / Recovery 600 gpm:	**34-35**
Gadolinium Recirculation / Recovery 1200 gpm:	**36-37**

DUSEL Water Treatment Design Options:
Piping.

Material:

Pretreatment to Reverse Osmosis PVC Sch 80 socket weld.
Reverse Osmosis Stainless Steel welded and V clamp.
Post Treatment Deionization Fill PVDF Butt or Socket Fused.
Detector Recirculation PVDF Butt or Socket Fused.

Flow Velocity to be from 4FPS to 6 FPS.

Maximum pressures in system 150 psi. (Except piping if Fill is surface mount)

Pipe Sizes.

Fill:

Supply Piping:	6”
Pretreatment:	6” and 4”
Reverse Osmosis:	4”
Post Treatment:	4”

Polishing loop:

300 gallons per minute:	4”
600 gallons per minute:	6”
1200 gallons per minute:	8”

DUSEL Water Treatment Design Options:
Vessel Specifications.

Vessel Specifications:

ASME Coded.
All vessels are to be designed to have their contents replaced using Super Sacs.
All vessels to be mounted on/in a cage to accommodate transportation down Yates Shaft and when in mine be put on rails for transfer to site.
Cage around vessels to serve as Seismic Restraints.

Either 18" or 30" rails to be used. Wheels to be provided by others.

Special Fittings:

Mixed Bed and U/ Th Vessels are to be equipped with Resin replacement ports.
Resin Fill ,Top 18" Man way.
Resin Out Bottom 6" flange reduced to 4" sweep ell and Supplied with Butterfly Valve.

Vessel Specifications:	ASME
Dimensions:	63" X 144"
Cubic foot:	218
Empty weight:	1540 lbs.
Liner:	Polypropylene
Pipe size of Vessels:	
Depth Filter:	6" ANSI Flange
Carbon:	6" ANSI Flange
Water Softeners:	6" ANSI Flange
Mixbed Deionizers:	6" ANSI Flange inlet and outlet 18" Man way Top 6" Flange Bottom.
Uranium/Thorium:	6" ANSI Flange inlet and outlet 18" Man way Top 6" Flange Bottom.

DUSEL Water Treatment Design Options:
Ion Exchange Resins.

Ion Exchange Resin:

Mixed Bed and U/Th ion exchange resin will be replaced when exhausted and not regenerated.

Mixed Resin: **Ionac NM-60SG or equal.**

High Purity Ion Exchange resin consisting of a 1:1 chemically equivalent mixture of a gel Type 1 strong base anion and a strong acid cation exchange resin.
Specially treated to rapidly yield high resistivity and Low TOC values
Meets ASTM Type 1 applications of 18+ megohm water quality and < 3 delta ppb TOC.

Uranium and Thorium Resin: **Lewatit MP500 or equal.**

Type 1, macro porous Anion exchange resin with high total exchange capacity and bead integrity suited for applications where adsorption and desorption of Natural occurring organics are important.
Ion exchange resin used to meet the require reduction of Uranium and Thorium in the High Purity Water to a limit of U < 1.4 x 10- 15 g/g and Th < 8.3 x 10- 16 g/g.

Water Softener Resin: **ResinTech CG8 or equal.**

Premium coarse grade high capacity gel type sulfonated polystyrene cation resin supplied in the sodium form.
95% of beads in the minus 16 to 40 mesh range.
Color throw APHA no. 20 max as shipped.
Capacity 33,000 grains at 15 lbs NaCl /ft3.

DUSEL Water Treatment Design Options:
Motors/Pumps.

Standards:
All Motors, Controls and Instrumentation must comply with all National Testing Lab Standards as well as Local , State and DUSEL Authorities.

Motors: **Baldor Premium Efficient or equal.**

All motors to meet or exceed NEMA Premium Efficiency Standards.
All motor to be 460 volt 3 phase TEFC.

Pumps: **Griswold 811 ANSI Centrifugal or equal.**
All pumping applications to have spare pump installed, 1 running at a time. Manually or Auto switch over.

Skid mounted pump and motor.
Motor coupled.
Wetted material 316 Stainless Steel, Single Stage Fully open impeller.

DUSEL Water Treatment Design Options:
Instrumentation.

Flow: **Signet 8860 Transmitter or equal.**

Number of units: **7**
Digital Panel Mount Flow transmitters with integral mount Flow Sensors.
Outputs 4-20ma.
Paddle wheels to be Teflon and Titanium.

Resistivity Dissolved Oxygen, PH: **Thornton 770 MAX or equal.**

Number of units: **2**
Multi parameter panel mount Analyzer Transmitter
Range 0-18 megohm.
Instrument to be certified and certifiable with Certified Calibration adapter.
Minimum 6 inputs and 8 analog outputs 4-20ma per instrument.

Reverse Osmosis Conductivity: **Signet 8850 Transmitter or equal.**

Number of units: **1**
Panel Mount Transmitter.
2 channel conductivity with % rejection.
2 outputs 4-20 ma.

Pressure:

Visual:
Number of units: **24**
Transducer:
Number of units: **20**

Temperature:

Thermal Couple:
Number of units: **5**

DUSEL Water Treatment Proposal.

Instrumentation.

All instrumentation will be visual and have 4-20 ma outputs to PLC as follows:

	PSI	Flow	Conduct/Resist	Temp	4-20 output
FILL					
Supply Pipe	**P**				**P**
Depth Filter	P				P
Carbon	P				P
Water Softener	P				P
Pre filter	P				P
Reverse Osmosis					
Pump	P				P
Product	P	F	C	T	PFCT
Waste	P	F	C		PFC
Post Treatment Fill					
Post DI	P	F	R		PFR
Pre Filter UV	P				P
UV	P				
UV intensity					X
Post Filter UV	P				
Degas	P				
Degas O2					X
Chiller	P			T	PFRT
Fill Pipe	P	F	R	T	PFRT
Recirculation					
Detector Pumps	P	F	R	T	PFRT
Polishing DI	P		R		PR
U/ Th Removal	P		R		PR
Pre Filter UV	P				P
UV	P				P
UV intensity					X
Post Filter UV	P				P
Chiller	P	F		T	PFT
Degas	P				P
Degas O2					X
Return Pipe	P	F	R		PFR

DUSEL Water Treatment Design Options:
PLC.

PLC: GE RX3i system or equal.
IEC 1131-3 Compliant.

300Mhz CPU with 10Meg of memory 2 Serial Ports with Ethernet 10/100 Mbits 2 RJ45 connector and 1 IP address module.
Analog and Isolated input modules minimum 76 points. 120/240 Vac minimum 16 points.

RX3i supports:	32,000 DI
	32,000 DO
	32,000 AI
	32,000 AO
	32,000 internal registers

Minimum 15" TFT Quick panel.

View Standard Edition-Hardware Key
One Year Globalcare

Programming Software:

CIMPLICITY HMI Server 150 I/O Development and Runtime System.
Logic Developer PLC Professional.
Historian Standard Server 100 Points.
All licenses to be owned by project.

All Programming to be included.
Programming Software to come with one-year minimum Global Care.

DUSEL Water Treatment Design Options:
Membrane Degas.

Membrane Degas:	**Membrana Ligui-Cel or equal.**
Specifications:	**<0.6 mg/liter Oxygen.**
	CO2 free.

Vacuum and Nitrogen Sweep.
Vacuum pump to be supplied.
Nitrogen to be supplied by others.

Contactor Size:	10” X 40”
Material:	Polypropylene
Housing:	PVDF
O Rings:	Viton.
Retention Ring:	Teflon

Minimum Gas Removal:	97%

DUSEL Water Treatment Design Options:
Chillers

Fill Chiller Conditions:

Cool 250 GPM to 13°C
Cooling solution is 100% Ultra Pure ASTM Type 1 water
Condenser temperature is 0-95°F air
Chiller to include remote enable/disable contacts, remote alarm contacts and 4-20mA set point input with retransmit

Continuous operation chiller conditions:

Provide 181 kW of cooling
Cool 125 GPM of side stream water from recirculation stream to 10°C, controlling to a final input back to Detector of 13ºC.
20% Ethylene glycol solution required in chilled water loop
Separate chilled water flow from pure water will shell and tube heat exchanger
Chiller will have remote temperature probe to monitor either main tank temperature or process water tank temperature
Chiller to include remote enable/disable contacts, remote alarm contacts and 4-20mA set point input with retransmit

All surfaces in contact with the process water will be constructed out of 316SS. The control panels will be UL 508a certified.

2-Model MXR125 Remote Air-Cooled Condenser Chillers (460/3/60)

The system consists of two MXR125 independent modules that will be piped together in the field in series. One module will include the PLC with HMI, that will control both modules.

Design
230 tons of cooling
250 gpm of water to be cooled to 13ºC.
95°F condenser air

Mechanical Chiller
Copeland rotary screw compressor with integral oil separator and filter
Compressor unloading for capacity control
Stainless steel brazed plate evaporator
Liquid line solenoid valve
Liquid line refrigerant filter dryer
Electronic expansion valve
R-134a refrigerant

Mechanical Remote Condenser (shipped separately)
Remote outdoor air cooled condenser
Modular design with divided fan sections to prevent 'wind-milling' during fan cycling
Galvanized steel fan sections and coil baffles
Copper tube/aluminum fin coils tested to 400 PSIG
Condenser shipped pressurized with dry nitrogen
Direct drive multi-blade propeller fans with venture orifices to optimize efficiency
Variable Speed Electronic fan cycling and header variable speed controls to maintain proper refrigerant head pressure

Electrical
NEMA-4 control panel mounted and wired to compressor and sensors
MCA of each chiller module: 220 amps
MCA of each remote condenser module: 36 amps
Allen-Bradley Compact Logix PLC controller
Color touch-screen control interface
Display of compressor refrigerant discharge pressure, compressor refrigerant discharge temperature, compressor refrigerant suction pressure, compressor refrigerant suction temperature, compressor refrigerant superheat temperature, compressor running hours, compressor slide valve position (or % unloading), coolant type (user input for water, % Ethylene Glycol, % Propylene Glycol), electronic expansion valve position (% open),

evaporator water inlet temperature, evaporator water outlet temperature, and process water set point temperature

Alarms for compressor motor overload, evaporator freeze protection, evaporator low flow, oil low level, power loss of phase, process supply water above high temperature alarm set point, process supply water below low temperature alarm set point, refrigerant high pressure, refrigerant low pressure, and status banner of start-up and shut-down sequences

Safeties for compressor motor high temperature, compressor motor overload, compressor motor reverse rotation, evaporator freeze protection, evaporator low flow, oil low level, power loss of phase, refrigerant high pressure, and refrigerant low pressure

Control Functions for alarm history occurrence with reset date and time stamp, compressor anti-recycle timer, compressor enable/disable, condenser water regulating valve control capability, coolant type user input (water, % Ethylene Glycol, % Propylene Glycol), internal calendar and clock, password protection of adjustable parameters (two levels – user settable, and factory settable), process water high temperature alarm (adjustable as offset from set point or absolute), process water low temperature alarm (adjustable as offset from set point or absolute), remote alarm contact, remote start/stop, single point chilled water and cooling tower system enable, single point selection between English and Metric units of measure

Alarm horn with silence keypad

DUSEL Water Treatment Design Options:
Recirculation Chiller.

Model TSW80A Water Cooled Chiller & Reservoir (460/3/60

Design
52 tons (181 kW) of cooling
125 gpm of water to be cooled to 10ºC.
95°F condenser water

Mechanical
Hermetic scroll compressors
Compressor staging for capacity control
Two completely independent refrigeration circuits
Two water cooled shell & tube condensers with removable heads
Two mechanical condenser water regulating valves
Two stainless steel brazed plate evaporators
Two Y-strainers to protect evaporators from sediment
Two liquid line solenoid valves
Two liquid line refrigerant filter dryers
Two thermostatic expansion valves
425 gallon integral stainless steel reservoir with cover and divider
10 hp process pump designed for 125 gpm at 74 psi
Pump trim including suction legs, suction and discharge service valves, discharge check valve and discharge pressure gauge
Insulation of reservoir, cover and piping between pump and evaporators
Water level sight glass
Process return and overflow connections
Supply and return condenser water manifolds with isolation valves
Supply and return evaporator water manifolds with isolation valves
Model SX2000C Shell and Tube Teat Exchanger designed to cool the 117 GPM of process water 13°C to 7°C using 30°F chilled water.

DUSEL Water Treatment Design Options:
Chillers (cont)

Electrical
NEMA-4 control panel mounted and wired to compressors and sensors
Allen-Bradley 5/03 PLC controller
Maple Systems 7.7 inch, 256 color, 600 x 480 resolution DSTN touch screen control interface with ultra fast 133 MHz processor
Digital set point and high temperature alarm adjustment with password protection
Digital display of process water supply, return and set point temperatures
Digital display of condenser water supply and return temperature
Compressor load analysis (% capacity)

DUSEL Water Treatment Design Options:
Recirculation Chiller.

Compressor anti-cycle timer
Compressor running hours
Automatic compressor lead/lag
Status lights on PLC internal I/O cards
Mechanical safety interlocks for each circuit low flow, high refrigerant pressure, low refrigerant pressure, freezestat, compressor fault and pump fault
System faults for high and low temperature deviation alarms and probe fault alarm
Alarm horn with silence keypad
Process pump starter in control panel
Chiller pump starter in control panel
Pumps wired to control panel

Pretreatment Detector Fill.

Pretreatment Equipment used to insure Reverse Osmosis performance.
Pretreatment loads based on 300 gallons per minute and enclosed water analysis as follows.
Supplied by Lead-Deadwood Sanitary District.

Conductivity:	494 umho/cm
Hardness:	259 mg/L (15.1 grains)
Iron:	0.06 mg/L
TSS:	260 mg/L
Chlorine:	none reported

Water Softener load.

150kTon Detector:	600,000,000	grains
200kTon:	750,000,000	grains

In order of installation.
Depth Filtration removal of TSS down to 10 micron.
Carbon Filtration rated for Chlorine and Organic removal.
Water Softeners removal of water hardness.
Ultraviolet Sterilization, bacteria removal
Cartridge Filtration 5 Micron.

Pretreatment Equipment has be designed to Regenerate / Backwash and Filter change outs without interruption of Fill if supply water is delivered at a minimum of 600 gpm.

DUSEL Water Treatment Design Options:
Pretreatment. Detector Fill (cont')

Pretreatment Equipment.

Depth Filters.	SCWDF63144
Manufacturer:	South Coast Water
Duplex Automatic:	Pressure Backwash
Vessel Size:	63" X 144"
Vessel Material:	Filament Wound Fiberglass
Cubic Feet:	150
Service Flow Rate:	350
Backwash Flow Rate:	290
Carbon Filters:	SCWCAR63144
Manufacturer:	South Coast Water
Duplex Automatic:	Timed Backwash
Vessel Size:	63" X 144"
Vessel Material:	Filament Wound Fiberglass
Cubic Feet:	150
Service Flow Rate:	350
Backwash Flow Rate:	300
Water Softeners:	SCWWSDUP63144
Manufacturer:	South Coast Water
Duplex Automatic:	Metered Regeneration
Vessel Size:	63" X 144"
Vessel Material:	Filament Wound Fiberglass
Cubic Feet:	200
Service Flow Rate:	370
Backwash Flow Rate:	120
Salt use per regeneration:	3000 lbs
Grains Removal:	6,000,000 per regeneration
Ultraviolet Sterilizer:	M250
Manufacturer:	Atlantic
Flow rate:	450 gallons per minute
Wavelength:	254nm
Number of lamps:	19
Pre Fitters:	36FOS4316
Manufacturer:	Shelco
Flow rate:	450 gallons per minute
Filters:	36, 40" 5 micron

DUSEL Water Treatment Design Options:
Reverse Osmosis. Detector Fill

Reverse Osmosis. Detector Fill.

Reverse Osmosis unit used to reduce TDS and TSS prior to Deionization / Post Treatment.
Reverse Osmosis flow rate is 250 gallons per minute at 150 psi with minimum 70% Recovery and 95% Rejection.
Based on current Lead-Deadwood Sanitary District conductivity 494 umho/cm and RO rejection at 95% product water will be 24 umho/cm.
Flow rates and Rejections based on 50F / 10C.

Reverse Osmosis piping:	
Feed:	Stainless
Product:	Polypro
Waste:	PVC
Instrumentation:	
Feed:	Pressure, Flow, TDS
Product:	Pressure, Flow, TDS
Waste:	Pressure, Flow, TDS
Reverse Osmosis Pumps:	811L-3X1.5-13 A20
Manufacturer:	Griswold
Number of pumps:	2-1 running 1 as standby
Material:	316 Stainless Steel
Flow/Pressure:	300 gpm / 150 psi
Horse Power:	125 hp. 84.9 hp at 300 gpm
Motor:	Premium Efficient TEFC
Voltage:	460 3 phase
Reverse Osmosis Housings:	80A60
Housing Manufacture:	Code Line
Housing model #:	80A60
Number of Housings:	12
Number of Membranes:	6 per housing
Staging:	8-4
Size:	8” X 259”
Reverse Osmosis Membranes:	ESPA2-LD
Manufacturer:	Nitto Denko / Hydranautics
Number of Membranes:	72
Membrane per Housing:	6
Number of Membranes 1st Stage:	48
Number of Membranes 2nd Stage:	2

DUSEL Water Treatment Design Options:
Post Treatment. Detector Fill

Post Treatment. Detector Fill.

Post Treatment Equipment used to Polish Water from the Fill phase of the Reverse Osmosis Unit.
Lowering TOC levels, Increasing Water Quality to 18 meg ohms, removing bacteria, Chilling / Cooling water, and Degassing water.

In order of installation:

TOC Unit using 185 nm wavelengths to ionize organics and removed via DI.

Uranium / Thorium Reduction using one time Ion Exchange Resins, Anion type in OH form.

Deionizers using one time Ion Exchange Resins, Semiconductor grade low TOC type resin.
Removing remaining TDS from the RO product raising water quality to 18 meg ohms.

Pre Filters removing any TSS that my interfere with UV wavelength.

Ultraviolet Sterilizer reducing Bacteria level

Post Filters removing altered Bacteria to 1 micron.

Degasification using Vacuum and Nitrogen regass to remove excess gas.

Chiller used to reduce water temperature to Detector.

Note:
Deionizers and Uranium/ Thorium Vessels are designed for ion exchange resin change outs not Regenerations.
Vessels are equipped with Resin In and Out ports for ease of replacement.
Estimated cubic feet of Resin needed for fill:
(Based on RO rejection 95% and Product water at 24 umho/cm.)

	150kTon	200kTon
DI:	4000 cu ft.	5000 cu ft.
U/Th:	600 cu ft	600 cu ft

DUSEL Water Treatment Design Options:
Post Treatment. Detector Fill (cont')

TOC Unit:	M150
Manufacturer:	Atlantic
Number of Units:	1
Flow Rate:	250 gallons per minute
Wavelength:	185 nm
Number of Lamps:	12
Power Requirements:	230 volt 4.7 amps
Deionizers:	SCWDIMB63144
Manufacturer:	South Coast Water
Number of Units:	4, 2 on 2 as stand by
Unit Size:	63" X 144"
Vessel Material:	Filament Wound Fiberglass
Flow rate:	200 gallons per minute / unit.
Total Flow:	250 gallons per minute /bank of 3
Cubic foot:	200 cubic foot / unit 600 cubic foot / bank
Uranium / Thorium Reduction:	SCWUTR63144
Manufacturer:	South Coast Water
Number of Units:	4, 2 on 2 as stand by
Unit Size:	63" X 144"
Vessel Material:	Filament Wound Fiberglass
Flow Rate:	200 gallons per minute / unit
Total Flow:	250 gallons per minute / bank
Cubic foot:	200 cubic foot / unit
Pre Filters: Housing	36FOS4SB-316
Manufacturer:	Shelco
Number of Housings:	2
Flow rate:	250 gallons per minute ea
Filters:	36, 40" 1 micron ea
Ultraviolet Sterilizer:	M150
Manufacturer:	Atlantic
Number of Units:	1
Flow rate:	250 gallons per minute
Wavelength:	254nm
Number of lamps:	12
Number of Lamps:	12
Power Requirements:	230 volt 4.7 amps

DUSEL Water Treatment Design Options:
Post Treatment. Detector Fill (cont')

Post Filters: Housing	36FOS4SB-316
Manufacturer:	Shelco
Number of Housings:	2
Flow rate:	250 gallons per minute ea.
Filters:	36, 40" 0.1 micron ea.
Degasification:	1040
Manufacturer:	Membrana / Liqui-Cel
Type:	Membrane Contactors
Number of Contactors:	4-10"X40"
Flow Rate:	300 gallons per minute
Vacuum Pump:	
Type:	Liquid Ring
HP:	4 TEFC
Vacuum:	43 (acfm)
Vacuum Level:	50 (mm Hg abs)
Chiller:	MXR125
Manufacturer:	Thermal Care
Number of Units:	2
Flow Rate:	250 gallons per minute
Cooling Target:	13ºC
Cooling Range:	16 to 25ºC

DUSEL Water Treatment Design Options:
Detector Recirculation: 300 gallons per minute

Detector Recirculation: 300 gallons per minute.
Recirculation System is used to maintain Detector Water Purity and Temperature and meet and maintain ASTM Type 1 Water Quality:

Electrical Conductance:	.056 ms/cm @ 298K (25ºC)
Specific Resistivity megohm/cm:	18.0
PH:	N.A.
Total Organic Carbon: (TOC)	100 μG/L Max
Sodium:	1 μG/L Max
Chlorides:	1 μG/L Max
Silica:	3 μG/L Max
Bacteria:	<10/1000 ml
Endotoxin, EU3:	<0.03

The Recirculation Package has ALL the same aspects as the Post Treatment System but has been adjusted for flow rate and is self-contained to the Detector in recirculation. Once the Fill System has reached minimum level in the Detector. The Detector Pumps can be safely turned on and recirculation will begin.

In order of installation:

Detector Pumps transfer water to Polishing System and Return back to Detector.

TOC Unit using 185 nm wavelength to ionize organics and remove via DI.

Uranium / Thorium Reduction is using one time Ion Exchange Resins Anion type 1 in OH form.

Deionizers using selective non-regenerating Ion Exchange Resins, Semiconductor grade low TOC
Removing remaining TDS from the RO product raising water quality to 18 meg ohms.

Pre Filters removing any TSS that my interfere with UV wavelength.

Ultraviolet Sterilizer reducing Bacteria level.

Post Filters removing altered Bacteria to 1 micron.

Degasification using Vacuum and Nitrogen regass to remove excess gas.

Chiller used to maintain water temperature in Detector.

DUSEL Water Treatment Design Options:
Detector Recirculation: 300 gallons per minute. (cont')

Detector Pumps:	3X2-10A60
Manufacturer:	Griswold
Number of pumps:	2-1 running 1 as standby
Material:	316 Stainless Steel
Flow/Pressure:	300 gpm / 80 psi
Horse Power:	60 hp. 41.8 hp at 300 gpm.
RPM:	3500
Motor:	Premium Efficient TEFC
Voltage:	460 3 phase
TOC Unit:	M150
Manufacturer:	Atlantic
Flow Rate:	300 gallons per minute
Wavelength:	185 nm
Number of Lamps:	12
Deionizers:	SCWDIMB63144
Manufacturer:	South Coast Water
Number of Units:	4-2 on 2 as stand by
Unit Size:	63" X 144"
Vessel Material:	Filament Wound Fiberglass
Flow rate:	200 gallons per minute / unit.
Total Flow:	300 gallons per minute /bank of 3
Cubic foot:	200 cubic foot / unit 600 cubic foot / bank
Uranium / Thorium Reduction:	SCWUTR63144
Manufacturer:	South Coast Water
Number of Units:	4-2 on 2 as stand by
Unit Size:	63" X 144"
Vessel Material:	Filament Wound Fiberglass
Flow Rate:	200 gallons per minute / unit
Total Flow:	300 gallons per minute / bank
Cubic foot:	200 cubic foot / unit

DUSEL Water Treatment Design Options:
Detector Recirculation: 300 gallons per minute. (Cont')

Pre Filters: Housing	36FOS4SB-316
Manufacturer:	Shelco
Number of Housings:	2
Flow rate:	300 gallons per minute ea
Filters:	36-40" 1 micron ea
Ultraviolet Sterilizer:	M150
Manufacturer:	Atlantic
Flow rate:	300 gallons per minute
Wavelength:	254nm
Number of lamps:	12
Post Filters: Housing	36FOS4SB-316
Manufacturer:	Shelco
Number of Housings:	2
Flow rate:	250 gallons per minute ea
Filters:	36-40" 0.1 micron ea
Degasification:	1040
Manufacturer:	Membrana / Liqui-Cel
Type:	Membrane Contactors
Number of Contactors:	4-10"X40"
Flow Rate:	300 gallons per minute
Vacuum Pump:	
Type:	Liquid Ring
HP:	4 TEFC
Vacuum:	43 (acfm)
Vacuum Level:	50 (mm Hg abs)
Chiller:	TSW80A
Manufacturer:	Thermal Care
Number of Units:	1
Flow Rate:	117 gallons per minute
Cooling Target:	50ºF
Cooling Range:	60ºF to 50ºF

DUSEL Water Treatment Design Options:
Detector Recirculation: 600 gallons per minute

Detector Recirculation: 600 gallons per minute.

The Recirculation Package has ALL the same aspects as the Post Treatment System but has been adjusted for flow rate and is self-contained to the Detector in recirculation. Once the Fill System has reached minimum level in the Detector. The Detector Pumps can be safely turned on and recirculation will begin.

In order of installation:

Detector Pumps transfer water to Polishing System and Return back to Detector.

TOC Unit using 185 nm wavelength to ionize organics and remove via DI.

Uranium / Thorium Reduction is using one time Ion Exchange Resins Anion type 1 in OH form.

Deionizers using selective non-regenerating Ion Exchange Resins, Semiconductor grade low TOC
Removing remaining TDS from the RO product raising water quality to 18 meg ohms.

Pre Filters removing any TSS that my interfere with UV wavelength.

Ultraviolet Sterilizer reducing Bacteria level.

Post Filters removing altered Bacteria to 1 micron.

Degasification using Vacuum and Nitrogen regass to remove excess gas.

Chiller used to maintain water temperature in Detector.

DUSEL Water Treatment Design Options:
Detector Recirculation: 600 gallons per minute. (cont')

Detector Pumps:	811M-4X3-10A70
Manufacturer:	Griswold
Number of pumps:	2-1 running 1 as standby
Material:	316 Stainless Steel
Flow/Pressure:	600 gpm / 80 psi
Horse Power:	100 hp. 72.4hp at 600 gpm.
RPM:	3500
Motor:	Premium Efficient TEFC
Voltage:	460 3 phase
TOC Unit:	M150
Manufacturer:	Atlantic
Flow Rate:	300 gallons per minute ea
Number of Units:	2
Wavelength:	185 nm
Number of Lamps:	12 ea Total 24
Deionizers:	SCWDIMB63144
Manufacturer:	South Coast Water
Number of Units:	6-3 on 3 as stand by
Unit Size:	63" X 144"
Vessel Material:	Filament Wound Fiberglass
Flow rate:	200 gallons per minute / unit.
Total Flow:	600 gallons per minute /bank of 3
Cubic foot:	200 cubic foot / unit 600 cubic foot / bank
Uranium / Thorium Reduction:	SCWUTR63144
Manufacturer:	South Coast Water
Number of Units:	6-3 on 3 as stand by
Unit Size:	63" X 144"
Vessel Material:	Filament Wound Fiberglass
Flow Rate:	200 gallons per minute / unit
Total Flow:	600 gallons per minute / bank
Cubic foot:	200 cubic foot / unit

DUSEL Water Treatment Design Options:
Detector Recirculation: 600 gallons per minute. (Cont')

Pre Filters:Housing	36FOS4SB-316
Manufacture:	Shelco
Number of Housings:	4
Flow rate:	300 gallons per minute ea
Filters:	36-40" 1 micron ea
Ultraviolet Sterilizer:	M150
Manufacture:	Atlantic
Flow Rate:	300 gallons per minute ea
Number of Units:	2
Wavelength:	254 nm
Number of Lamps:	12 ea Total 24
Post Filters: Housing	36FOS4SB-316
Manufacturer:	Shelco
Number of Housings:	4
Flow rate:	300 gallons per minute ea
Filters:	36- 40" 0.1 micron ea
Degasification:	1040
Manufacturer:	Membrana / Liqui-Cel
Type:	Membrane Contactors
Number of Contactors:	9-10"X40"
Flow Rate:	600 gallons per minute
Vacuum Pump:	
Type:	Liquid Ring
HP:	5 TEFC
Vacuum:	54 (acfm)
Vacuum Level:	50 (mm Hg abs)
Chiller:	TSW80A
Manufacturer:	Thermal Care
Number of Units:	1
Flow Rate:	117 gallons per minute
Cooling Target:	50ºF
Cooling Range:	60ºF to 50ºF

DUSEL Water Treatment Design Options:
Detector Recirculation: 1200 gallons per minute

Detector Recirculation: 1200 gallons per minute.

The Recirculation Package has All the same aspects as the Post Treatment System but has been adjusted for flow rate and is self-contained to the Detector in recirculation.
Once the Fill System has reached minimum level in the Detector. The Detector Pumps can be safely turned on and recirculation will begin.

We have included a 1200 gallon per minute High Recovery Reverse Osmosis Unit in this recirculation system. The RO will be feed by the Detector Pumps . The RO will be a 4 Stage Unit allowing High Recovery.

In order of installation:

Detector Pumps transfer water to Polishing System and Return back to Detector.

1200 gallon per minute High Recovery Reverse Osmosis Unit.

TOC Unit using 185 nm wavelength to ionize organics and remove via DI.

Uranium / Thorium Reduction is using one time Ion Exchange Resins Anion type 1 in OH form.

Deionizers using selective non-regenerating Ion Exchange Resins, Semiconductor grade low TOC
Removing remaining TDS from the RO product raising water quality to 18 meg ohms.

Pre Filters removing any TSS that my interfere with UV wavelength.

Ultraviolet Sterilizer reducing Bacteria level.

Post Filters removing altered Bacteria to 1 micron.

Degasification using Vacuum and Nitrogen regass to remove excess gas.

Chiller used to maintain water temperature in Detector.

DUSEL Water Treatment Design Options:
Detector Recirculation: 1200 gallons per minute. (cont')

Detector Pumps:	811-6X4-GA80
Manufacturer:	Griswold
Number of pumps:	2-1 running 1 as standby
Material:	316 Stainless Steel
Flow/Pressure:	1200 gpm / 80 psi
Horse Power:	200 hp. 141hp@ 1200 gpm
RPM:	3500
Motor:	Premium Efficient TEFC
Voltage:	460 3 phase
Reverse Osmosis Pumps:	811-6X4-GA80
Manufacturer:	Griswold
Number of pumps:	2, 1 running 1 as standby
Material:	316 Stainless Steel
Flow/Pressure:	1200 gpm / 80 psi
Horse Power:	200 hp. 141hp@ 1200 gpm
RPM:	3500
Motor:	Premium Efficient TEFC
Voltage:	460 3 phase
Reverse Osmosis Housings:	80A60
Housing Manufacture:	Code Line
Housing model #:	80A60
Number of Housings:	48
Number of Membranes:	6 per housing
Staging:	30-12-5-1
Total Waste:	50 gpm
Size:	8" X 259"
Reverse Osmosis Membranes:	ESPA2-LD
Manufacturer:	Nitto Denko / Hydranautics
Number of Membranes:	288
Membrane per Housing:	6
Number of Membranes 1st Stage:	180
Number of Membranes 2nd Stage:	72
Number of Membranes 3rd	30
Number of Membranes 4th	6

DUSEL Water Treatment Design Options:
Detector Recirculation: 1200 gallons per minute. (cont')

TOC Unit:	M250
Manufacturer:	Atlantic
Flow Rate:	400 gallons per minute ea
Number of Units:	3
Wavelength:	185 nm
Number of Lamps:	19 ea Total 57
Deionizers:	SCWDIMB63144
Manufacturer:	South Coast Water
Number of Units:	12-6 on line 6 as standby
Unit Size:	63" X 144"
Vessel Material:	Filament Wound Fiberglass
Flow rate:	200 gallons per minute / unit.
Total Flow:	1200 gallons per minute /bank of 3
Cubic foot:	200 cubic foot / unit 600 cubic foot / bank
Uranium / Thorium Reduction:	SCWUTR63144
Manufacturer:	South Coast Water
Number of Units:	6
Unit Size:	63" X 144"
Vessel Material:	Filament Wound Fiberglass
Flow Rate:	200 gallons per minute / unit
Total Flow:	1200 gallons per minute / bank
Cubic foot:	200 cubic foot / unit

DUSEL Water Treatment Design Options:
Detector Recirculation: 1200 gallons per minute. (Cont')

Pre Filters: Housing	36FOS4SB-316
Manufacturer:	Shelco
Number of Housings:	4
Flow rate:	300 gallons per minute ea
Filters:	52, 40" 1 micron ea
Ultraviolet Sterilizer:	M250
Manufacturer:	Atlantic
Flow Rate:	400 gallons per minute ea
Number of Units:	3
Wavelength:	254 nm
Number of Lamps:	19 ea Total 57
Post Filters: Housing	36FOS4SB-316
Manufacturer:	Shelco
Number of Housings:	4
Flow rate:	300 gallons per minute ea
Filters:	52-40" 0.1 micron ea
Degasification:	1040
Manufacturer:	Membrana / Liqui-Cel
Type:	Membrane Contactors
Number of Contactors:	15- 10"X 40"
Flow Rate:	1200 gallons per minute
Vacuum Pump:	
Chiller:	TSW80A
Manufacturer:	Thermal Care
Number of Units:	1
Flow Rate:	117 gallons per minute
Cooling Target:	50ºF
Cooling Range:	60ºF to 50ºF

Gadolinium Recirculation / Recovery.

The Gadolinium System primarily is to remove the Gadolinium or Split it out of the Pure Water as it comes from the Detector prior to the Polishing System Equipment. If allowed to enter the Polishing System Equipment the Gadolinium would be removed by ion exchange in the Mixed Bed Polishers.

Gadolinium in High Purity Water as a recovery system at the time of this proposal is only in test stages and no known operating system exists today.

The test Systems that have been shown to work by removing the Gadolinium while maintaining the Polishing System Loop have been by using Membrane technologies and EDI either in combination or separate.

EDI is problematic because of the out gassing electrolytes stream in a mine.

These Systems remove the Gadolinium in the Reject streams of NF and RO membranes and polish the Product stream by EDI prior to the Polishing Loop.

For the purpose of Pricing in this proposal we have used the current membrane technology and assume that the Gadolinium is pure and has been pretreated prior to injection into High Purity Detector.

DUSEL Water Treatment Design Options:
Gadolinium Recirculation / Recovery 300 gpm

Nanofiltration and Reverse Osmosis. 300 gallon per minute

Instrumentation:	
Feed:	Pressure, Flow, TDS
Product:	Pressure, Flow, TDS
Waste:	Pressure, Flow, TDS
Nanofiltration Membranes Housings:	
Housings:	80A60
Housing Manufacture:	Code Line
Housing model #:	80A60
Number of Housings:	12
Number of Membranes:	6 per housing
Staging:	8-4
Size:	8” X 259”
Nanofiltration Membranes:	ESNA1-LF8040
Manufacturer:	Nitto Denko / Hydranautics
Number of Membranes:	72
Membrane per Housing:	6
Number of Membranes 1st Stage:	72
Reverse Osmosis Pumps:	811L-3X1.5-13 A20
Manufacturer:	Griswold
Number of pumps:	2-1 running 1 as standby
Material:	316 Stainless Steel
Flow/Pressure:	300 gpm / 150 psi
Horse Power:	125 hp. 84.9 hp at 300 gpm
Motor:	Premium Efficient TEFC
Voltage:	460 3 phase
Reverse Osmosis Housings:	80A60
Housing Manufacture:	Code Line
Housing model #:	80A60
Number of Housings:	12
Number of Membranes:	6 per housing
Staging:	8-4
Size:	8” X 259”

DUSEL Water Treatment Design Options:
Gadolinium Recirculation / Recovery 300 gpm (cont')

Reverse Osmosis Membranes:	ESPA2-LD
Manufacturer:	Nitto Denko / Hydranautics
Number of Membranes:	72
Membrane per Housing:	6
Number of Membranes 1st Stage:	48
Number of Membranes 2nd Stage:	24

DUSEL Water Treatment Design Options:
Gadolinium Recirculation / Recovery 600 gpm

Nanofiltration and Reverse Osmosis. 600 gallon per minute

Instrumentation:	
Feed:	Pressure, Flow, TDS
Product:	Pressure, Flow, TDS
Waste:	Pressure, Flow, TDS
Nanofiltration Membrane Housings:	
Housings:	80A60
Housing Manufacture:	Code Line
Housing model #:	80A60
Number of Housings:	24
Number of Membranes:	6 per housing
Size:	8" X 259"
Nanofiltration Membranes:	ESNA1-LF8040
Manufacturer:	Nitto Denko / Hydranautics
Number of Membranes:	144
Membrane per Housing:	6
Number of Membranes 1st Stage:	144
Reverse Osmosis Pumps:	811M-4X3-10A70
Manufacturer:	Griswold
Number of pumps:	2, 1 running 1 as standby
Material:	316 Stainless Steel
Flow/Pressure:	600 gpm / 80 psi
Horse Power:	100 hp. 72.4hp at 600 gpm.
RPM:	3500
Motor:	Premium Efficient TEFC
Voltage:	460 3 phase
Reverse Osmosis Housings:	80A60
Housing Manufacture:	Code Line
Housing model #:	80A60
Number of Housings:	24
Number of Membranes:	6 per housing
Staging:	16-8
Size:	8" X 259"

DUSEL Water Treatment Design Options:
Gadolinium Recirculation / Recovery 600gpm (cont')

Reverse Osmosis Membranes:	ESPA2-LD
Manufacturer:	Nitto Denko / Hydranautics
Number of Membranes:	144
Membrane per Housing:	6
Number of Membranes 1st Stage:	96
Number of Membranes 2nd Stage:	48

DUSEL Water Treatment Design Options:
Gadolinium Recirculation / Recovery 1200gpm

Nanofiltration and Reverse Osmosis. 1200 gallon per minute

Instrumentation:	
Feed:	Pressure, Flow, TDS
Product:	Pressure, Flow, TDS
Waste:	Pressure, Flow, TDS
Nanofiltration Membrane Housings:	
Housings:	80A60
Housing Manufacture:	Code Line
Housing model #:	80A60
Number of Housings:	48
Number of Membranes:	6 per housing
Size:	8" X 259"
Nanofiltration Membranes:	ESNA1-LF8040
Manufacturer:	Nitto Denko / Hydranautics
Number of Membranes:	288
Membrane per Housing:	6
Number of Membranes 1st Stage:	288
Reverse Osmosis Pumps:	811-6X4-GA80
Manufacturer:	Griswold
Number of pumps:	2, 1 running 1 as standby
Material:	316 Stainless Steel
Flow/Pressure:	1200 gpm / 80 psi
Horse Power:	200 hp. 141hp@ 1200 gpm
RPM:	3500
Motor:	Premium Efficient TEFC
Voltage:	460 3 phase
Reverse Osmosis Housings:	80A60
Housing Manufacture:	Code Line
Housing model #:	80A60
Number of Housings:	48
Number of Membranes:	6 per housing
Staging:	32-16
Size:	8" X 259"

DUSEL Water Treatment Design Options:
Gadolinium Recirculation / Recovery 1200gpm (cont')

Reverse Osmosis Membranes:	ESPA2-LD
Manufacturer:	Nitto Denko / Hydranautics
Number of Membranes:	288
Membrane per Housing:	6
Number of Membranes 1st Stage:	192
Number of Membranes 2nd Stage:	96

	LBNE Water Cherenkov Detector **BASIS of ESTIMATE FORM (BoE)**	**Date of Estimate: 22-July-2011** **Revision #: -** **Prepared By: Jack Fowler** **Approved By:** **Level 2 Manager**

WBS Number: **130.04.06.03**	**WBS Title:** **Recirculation System**

WBS Dictionary:

This WBS Element covers the design, fabrication and delivery of the Water Recirculation System for the WCD. The recirculation system will be located underground in the utility drift near the WCD. The recirculation system takes in water from the detector, cleans, cools, and delivers it back to the tank. It is expected that this system will operate nearly continuously once the detector is commissioned. Tasks included under this WBS element will bring the physics requirements and engineering specifications to maturity, and complete the design drawings, engineering analysis, interface specifications, and safety and risk assessments. The process will include at a minimum Conceptual, Preliminary, Final Design, and Installation. Final design will be followed by procurement and fabrication of the water recirculation system. Fabricated parts will be shipped directly to the installation warehouse.

Cost Type **(check all that apply):** _*_ EDIA Material _*_ EDIA Labor _*_ MFG Material _*_ MFG Labor	**Costing Method** **(check all that apply):** _*_ Engineering Judgment _*_Physicist Estimate ___ Level of Effort _*_ Vendor Quote (attached) ___ Catalog Price (specify) ___ Prior purchase _*_ Prior experience ___ Parametric Estimate ___ Other- Description:_____

Attach Relevant Documents (including but not limited to):

M&S Contingency (%)**: 10%**	**Labor Contingency** (%)**: 25%**

Basis of Estimate

Details of Estimate:
In this estimate, we include all tasks related to the specification, design, and procurement of the underground recirculation system. Also included are the engineering costs to integrate the design with the conventional facilities at the far site. Specifically, this will be detailed interface documents and drawings, material specifications, QC requirements, infrastructure required, and environmental considerations.
The cost for the equipment, shipping to the LBNE warehouse, piping and electrical interconnects within 10' of the equipment, and actual installation is included in the vendor estimate. A copy of the estimate will be provided with this document. Also provided is the Water Treatment Design Option report. This details all of the equipment, controls, and materials that are proposed for the system. A high level breakdown of the costs for the fill system is below.

Recirculation system equipment	$5,000,000.00
Expendables for 1 year of operation	$800,000.00
Instrumentation and Controls	$110,000.00
Piping ,Electrical, and Install	$1,160,000.00
Delivery to Homestake	Included in $30,000.00 shown in fill system
Start up	Included in $25,000.00 shown in fill system
Sump pumps for fill/recirculate system	$64,000.00
Recirculation pumps	$356,700.00
TOTAL	$7,490,700.00

Not included in this estimate are the costs for conventional facilities. These would include the cost to excavate and ready the installation site, MEP infrastructure, supply piping from the surface system, distribution piping to the detector, and any water sumps or piping.

Equipment costs are based on a vendor quotation. This vendor has supplied similar equipment to other experiments and is currently supplying many of the institutes with small water systems for testing purposes.

Labor Details:

Table 1 provides detail of the labor hours by job function from Preliminary Design (FY11) through installation (FY22) for the Recirculation System WBS of the Water System.
Engineering hours are estimated at 15 % FTE for FY 11 through 14. These increase to 30% in FY 15 through the delivery of the equipment. This is currently estimated in FY-20, however, if the need for the system is sooner these outer year costs will be reduced.
In FY15 through FY18, we are allotting for 40 hours in each year of electrical engineering time to verify the electrical and control system logic. These systems must be integrated for fire and life safety, and overall laboratory operation.
In FY19 and FY20 we are allotting for 15% of a FTE general technician to work with conventional facilities and equipment vendor to ready the installation site and to produce any customized materials needed.
Through FY12 through FY20, we are allotting time for an off project faculty member. This is estimated at 15% FTE. The off project faculty members have worked on previous WCD detectors and their knowledge and experience is crucial to the successful delivery of a working system. There is no labor costs associated with their hours.

Assumptions/Interfaces:
Our current design philosophy for the water recirculation system is to leave the design at the conceptual level until the schedule drives action. We currently anticipate the first use of the recirculation system will be the actual fill of the detector. In order to sustain the design, we will closely monitor the interfaces with the other sub-systems and conventional facilities. Before each CD review, we will have water recirculation system design review to ensure the proper interfaces and coordination is maintained. The main interfaces with the recirculation system are with the conventional facilities and water containment group. These interfaces will be closely monitored as the far site progresses before the system is installed.

This estimate assumes that the system will be installed in drifts 636 and 625. Conventional Facility is responsible for the necessary infrastructure and excavated space needed for the system. All electrical and plumbing interfaces will be available to within 10 feet of the equipment placement. Drainage sumps to capture the water rejected by the RO will be installed and plumbed to the sumps going to the mine dewatering facility at the Ross shaft. This system will be able to accommodate a continuous stream of 50 gpm and 300 gpm during a detector drain. There will be a mezzanine built above most of the system to allow for top access to the large DI tanks, and for an electrical room to be located on. Also, all of the necessary fire and life safety equipment will be installed.

This estimate assumes that off project faculty members are available to assist in the design and procurement effort of the system. There is no labor costs associated with these personnel.

Comments:
Included in the vendor estimate are the costs for consumables for the first year of operation. This is estimated at $800,000.00 of the total $7,490,700.00 shown for the recirculation system. The first year of operation will include the estimated 6 months for initial fill and 6 months of detector operation.

130.04.06.03 Recirculation System

WBS LEVEL 5	ACTIVITY ID	ACTIVITY DESCRIPTION	START DATE	FINISH DATE	DURATION	RESOURCE	HOURS	COST	TOTAL with Escalation
130.04.06.03 Recirculation Syste	WS1680	Value Engineering	3/9/2011	6/6/2011	63	BNL M&S CE from DK: Mechanical Engineer	68	4,711	4,838
		Value Engineering Total					68	4,711	4,838
	WS1690	Interface Documents	6/7/2011	8/31/2011	60	BNL M&S CE from DK: Mechanical Engineer	136	9,430	9,684
		Interface Documents Total					136	9,430	9,684
	WS1700	Integration Plan and Conventional Facil	9/1/2011	1/30/2012	100	BNL M&S CE from DK: Mechanical Engineer	136	9,416	9,707
		Integration Plan and Conventional Facilities Total					136	9,416	9,707
	WS1710	Prepare for CD-1 Review	1/31/2012	3/27/2012	40	BNL M&S CE from DK: Mechanical Engineer	34	2,354	2,429
		Prepare for CD-1 Review Total					34	2,354	2,429
	WS1720	CD-1 Review	3/30/2012	4/3/2012	3	BNL M&S CE from DK: Mechanical Engineer	7	484	499
		CD-1 Review Total					7	484	499
	WS1730	Monitor Design/Interfaces/Integration	4/4/2012	3/14/2013	235	BNL M&S CE from DK: Mechanical Engineer	270	18,710	19,356
						BNL M&S CE from IR: Uncosted Physicist/Scientist	270		
		Monitor Design/Interfaces/Integration through CD-2 Total					541	18,710	19,356
	WS1740	Interim Review before CD-2	3/15/2013	5/9/2013	40	BNL M&S CE from DK: Mechanical Engineer	68	4,708	4,883
		Interim Review before CD-2 Total					68	4,708	4,883
	WS1750	CD-2 Review	6/12/2013	6/14/2013	3	BNL M&S CE from DK: Mechanical Engineer	7	484	502
		CD-2 Review Total					7	484	502
	WS1760	Monitor Design/Interfaces/Integration	6/17/2013	11/10/2014	351	BNL M&S CE from DK: Mechanical Engineer	319	22,114	23,478
						BNL M&S CE from IR: Uncosted Physicist/Scientist	319		
		Monitor Design/Interfaces/Integration through CD-3 Total					639	22,114	23,478
	WS1770	Interim Review before CD-3B	11/12/2014	1/13/2015	40	BNL M&S CE from DK: Mechanical Engineer	102	7,062	7,726
		Interim Review before CD-3B Total					102	7,062	7,726
	WS1780	CD-3B Review	1/14/2015	1/16/2015	3	BNL M&S CE from DK: Mechanical Engineer	7	484	529
		CD-3B Review Total					7	484	529
	WS1790	Final Design/Interfaces/Integration	1/20/2015	9/12/2018	941	BNL M&S CE from DK: Mechanical Engineer	1,524	105,540	120,583
						BNL M&S CE from IR: Uncosted Physicist/Scientist	1,382		
						Electrical Engineer P2	197	11,427	17,299
		Final Design/Interfaces/Integration Total					3,104	116,967	137,882

	WS1800	Final Design Package and RFQ	9/13/2018	1/16/2019	90	BNL M&S CE from DK: Mechanical Engineer	170	11,776	14,279
						BNL M&S CE from IR: Uncosted Physicist/Scientist	100		
		Final Design Package and RFQ Total					270	11,776	14,279
	WS1810	Award Contract	6/6/2019	6/7/2019	2	BNL M&S CE Costs		7,490,700	9,268,992
		Award Contract Total						7,490,700	9,268,992
	WS1820	Procurement of system	8/5/2019	2/28/2020	150	BNL M&S CE from DK: Mechanical Engineer	300	20,770	25,771
						BNL M&S CE from IR: Uncosted Physicist/Scientist	300		
		Procurement of system Total					600	20,770	25,771
	WS1830	Fabrication	8/5/2019	2/28/2020	150	BNL M&S CE from DK: Mechanical Engineer	401	27,728	34,404
						BNL M&S CE from IR: General Labor	401	14,294	17,735
						BNL M&S CE from IR: Uncosted Physicist/Scientist	204		
						BNL M&S CE from UN: General Labor	1,200	25,956	32,206
		Fabrication Total					2,205	67,977	84,346
130.04.06.03 Recirculation System Total							**7,923**	**7,788,146**	**9,614,903**
Grand Total							**7,923**	**7,788,146**	**9,614,903**

DUSEL WATER TREATMENT PRICING:

Prepared for:

BROOKHAVEN NATIONAL LABORATORY

Job Site:

HOMESTAKE MINE
Lead, South Dakota.

Prepared by:

SOUTH COAST WATER
401 S Santa Fe
Santa Ana, CA. 92705

By:

Roy E. Hall
714.648 2488 ext 13
hall@sch2o.com

Contributors:

Water Temperature Equipment	*Heat Technology* *Glenn Schuelke*
Pumping Equipment	*Pumping Solutions* *Jim Bruce*
PLC Controls	*Gexpro* *John Chang*
CAD Drawings	*Jimmy Baker III*
Ion Exchange Resin	*Sybron Lanxess Lewatit* *Dave Daly* *Tony Decola* *Dewight Tamaki*

Approach to Project:	4
Above Ground Option:	5
Pricing:	6-7
Lead Times:	8
Utilities:	9-10
Consumables:	11

DUSEL Water Treatment Design Options:
Approach to Project.

Approach to Project:

Because the equipment is to be installed at the 4850' level and the limitations of the YATES SUPER-CAGE, We have made the following exception / modifications to proposed equipment:

ALL Vessels, DI, Pretreatment, U/Th have a custom cage and have been sized to fit within limitations of Yates Super Cage.

We have designed the DI and U/Th Vessel to accommodate replacement of Resin using Super Sacs fill and dump.

Reverse Osmosis has been designed to be delivered and reassembled.
Reverse Osmosis pumps are skid mounted and fit within the confines.

Fill Chiller is Air Cooled if Fill Equipment is on the surface.
Recirculation Chillers are Water Cooled not Fan Cooled.

Initially Ultra Filtration and Reverse Osmosis was not selected for use in recirculation systems because the Detectors are self contained and Fill System is shared between Detectors, the waste waters from UF and RO could not be brought back and treated.
However by reducing the waste flow and keeping the Unit specifically to each Detector we have proposed the use of Reverse Osmosis on the recirculation side of the large recirculation system. Recommended recovery rate of RO minimum of 95%.
The water quality of RO waste will be High Quality so recommend using for utility uses.

EDI was not selected because of Venting problems.

DUSEL Water Treatment Design Options:
Options.

Options:

FILL:
Since the design of the FILL System is separate from the Detector Recirculation Systems and the Fill system can be used for multiple Detectors we would like you to consider the following options.

Our recommendation is to install ALL the fill equipment upstairs and feed Detector level with two supply pipes one 6" Stainless steel which would be the water after Chiller, Post DI and one 2" Stainless Steel would be Pretreatment Water after Softeners.

Pretreatment installed above ground.

Advantages:

Easy access to Pretreatment expendable like Salt and Pre Filter Changes.

Example,
Water Softener Salt Needed for fill is 3200 lbs per day.
150kt Detector will need = 358,400 pounds to fill.
200kt Detector will need = 441,600 pounds to fill.

Waste from Pretreatment will not have to be pumped up to surface.
Waste from RO does not have to be pumped up to surface.

Greater Water Supply available allowing for regenerations / backwashing of Pretreatment Equipment while Fill of Detector continues.

Easy access to Ion Exchange Resin Mix Beds.
Change out of Mixed bed Resin is estimated at:
DI ion exchange resin needed to be changed out based on 1 grain loading from Reverse Osmosis Unit:

150kt = 4000 cubic feet, 20 Mixed bed Vessels to be changed out during fill.
200kt = 5000 cubic feet, 25 Mixed bed Vessels to be changed out during fill.

Could explore the use of Exchange Resin instead of replacement. This could save funds expressly if future Detectors are added.
Could explore the use of EDI.
Chiller can be Air Cooled which is much more efficient than water-cooled.

DUSEL Water Treatment Design Options:
Pricing.

Pricing:

Note: South Dakota has sales and excise tax as well as a service / installation tax we Have used 8% for those taxes and have included in equipment pricing and installation. Pricing includes Expendables for 1 Fill of Detector as well as Expendables First year Recirculation.

Equipment.

Pretreatment Equipment:	$ 670,000.00
Reverse Osmosis Equipment:	$ 210,000.00
Post Treatment DI:	$ 2,200,000.00
Total Fill System:	**$ 3,080,000.00**

Optional Recirculation Equipment: (select one add to above)

300 gallons per minute:	$ 1,850,000.00
600 gallons per minute:	$ 2,900,00.00
1200 gallons per minute:	$ 5,800,000.00

Optional Gadolinium Recovery System: (select one add to above)

300 gallon per minute:	$ 495,000.00
600 gallon per minute:	$ 870,000.00
1200 gallon per minute:	$ 1,525,000.00

Instrumentation and Controls: (add to above)

Fill and Recirculation:	$ 110,000.00

DUSEL Water Treatment Design Options:
Pricing.

Piping / Installation:

Piping and installation is Piping and Electrical interconnection only.
Delivery of equipment from surface to equipment site to be by others.
City Supply, Waste, Supply to Detector and Electric to be provided within 10' of Equipment.

Pre Treatment and Reverse Osmosis:		$ 230,000.00
Parts:	$ 157,500.00	
Labor:	$ 72,500.00	
Post DI:		$ 275,000.00
Parts:	$ 231,000.00	
Labor:	$ 44,000.00	
300 gallons per minute Recirculation:		$ 310,000.00
Parts:	$ 266,000.00	
Labor:	$ 44,000.00	
600 gallons per minute Recirculation:		$ 610,000.00
Parts:	$ 552,000.00	
Labor:	$ 58,000.00	
1200 gallons per minute Recirculation:		$ 1,160,000.00
Parts:	$1,078,000.00	
Labor:	$ 82,000.00	

Delivery to Job site:

Delivery includes Inbound and Outbound freight to Job site.
Not included is off loading at site.

Delivery: $ 30,000.00

Job site Start Up:

This include 10 days during Start of Fill and beginning of Recirculation.

Start Up: $ 25,000.00

DUSEL Water Treatment Design Options:
Lead times and Schedules:

RFQ:

Submittals:	45 days

From release of purchase order:

Approvals:	45 days
Equipment Build out:	26 weeks
Delivery to Lead:	4 weeks
Delivery equipment to install sites: (by outfitters)	2 weeks
Set Up and Installation:	
Set Up: (layout and placement)	
Pretreatment and RO Fill System:	1 week
1200 gpm recirculation:	2 week
Install: (plumbing and electrical)	
Pretreatment and RO Fill System:	2 weeks
1200 gpm recirculation:	4 weeks
Start up:	
Pretreatment and RO Fill System:	1 week
1200 gpm recirculation :	1 week

DUSEL Water Treatment Design Options:
Utilities:

Utilities needed:

Supply Water:	600 gallons per minute at 60 psi.
Waste Water:	400 gallon per minute capabilities.

Total Water Use for FILL, includes Pretreatment and RO Waste Water.

	Total Water	Waste Water
150kt:	50,000,000 gallons	10,000,000
200kt:	62,000,000 gallons	12,000,000

Electrical:	Horse power		KW (round up)	AMPS
Reverse Osmosis:	85 hp	460 3 phase	65	82
Actual Motor HP:	125		93	137
Vacuum Pump Degas Fill:	4 hp	460 3 phase	3	4
300 gpm Recirculation:	42 hp	460 3 phase	32	40
Actual Motor HP:	60 hp		45	65
Vacuum Pump Degas :	4 hp	460 3 phase	3	4
600 gpm Recirculation:	73 hp	460 3 phase	55	
Actual Motor HP:	100 hp		75	110
Vacuum Pump Degas :	5hp	460 3 phase	4	5
1200 gpm Recirculation:	142 hp	460 3 phase	106	133
Actual Motor HP:	200 hp		150	216
Reverse Osmosis:	85 hp	460 3 phase	65	82
Actual Motor HP:	125		93	137
Vacuum Pump Degas:	10 hp	460 3 phase	8	
300 gpm Gadolinium:	42 hp	460 3 phase	32	40
Actual Motor HP:	60		45	65
600 gpm Gadolinium:	73 hp	460 3 phase	55	69
Actual Motor HP:	100 hp		75	110
1200 gpm Gadolinium:	142 hp	460 3 phase	106	133
Actual Motor HP:	200 hp		150	216

note: calculating KW used 460 and 110 volts with power factors of 1.73 and .85.

DUSEL Water Treatment Design Options:
Utilities: (cont')

	Volts	Amps	KW
Fill Chiller:			
MXR125 #1	460 3 phase	220 Rated Load Amps	175
Remote Condenser:	460 3 phase	36 Rated Load Amps	29
MXR125 #2	460 3 phase	220 Rated Load Amps	175
Remote Condenser:	460 3 phase	36 Rated Load Amps	29
Recirculation Chiller:			
TSW80A:	460 3 phase	145 Rated Load Amps	158
Chiller Control pump:	460 3 phase	24 Rated Load Amps	20
PLC :	110 volt	10 Rated Load Amps	1
Instrumentation:	110 volt	20 Rated Load Amps	2
Pretreatment Equipment:	110 Volt	10 Rated Load Amps	1
Ultraviolet Sterilizers:	220 volt		
M150:		4.7 Rated Load Amps	1
M250:		7.3 Rated Load Amps	1.5
TOC:	220 Volt		
M150:		4.7 Rated Load Amps	1
M250:		7.3 Rated Load Amps	1.5

DUSEL Water Treatment Design Options:
Consumables.

Items needed to be replaced/used during FILL:				
	150kt Detector	**Cost**	**200kt Detector**	**Cost**
Supply Water gallons:	50,000,000		62,000,000	
Water Softener Salt:	358,400 lbs	$ 21,504	441,600 lbs	$ 26,496
Pre Filters:	144-40” 5 micron	$ 1,728	180-40” 5 micron	$ 2,160
MB Exchange Resin:	4000 cubic feet	$1,000,000	5000 cubic feet	$1,250,000
U/Th Exchange Resin:	800 cubic feet	$ 280,000	800 cubic feet	$ 280,000
Pre Filters:	72- 40” 5 micron	$ 860	72-40” 5 micron	$ 860
Ultraviolet Lamps:	38	$ 7,600	38	$ 7,600
Post Filters:	72- 40” 0.1 micron	$ 18,000	72- 40” 0.1 micron	$ 18,000
TOC Lamps:	19	$ 3,800	19	$ 3,800
Man hours :	400		600	
Total KW:	250		250	
Total hrs:	2667		3334	
Items needed to be replaced/used Recirculation 1st year				
Make Up Water:	1,600,000		2,000,000	

Recirculation Rate:	**300 gpm**	**cost**	**600 gpm**	**cost**	**1200 gpm**	**cost**
MB Exchange Resin:	800cuft	$200,000	1200cuft	$300,000	2400cuft	$600,000
U/Th Exchange Resin:	800cuft	$280,000	1200cuft	$420,000	2400cuft	$840,000
Pre Filters 1 micron:	72- 40”	$864	144-40”	$1728	208-40”	$2496
Ultraviolet Lamps:	12	$2400	24	$4,800	38	$7,600
Post Filters 0.1 micron:	72-40”	$18,000	144-40”	$36,000	208-40”	$52,000
TOC Lamps:	12	$2,400	24	$4,800	38	$7,600
Man hours:	200		280		560	
Total KW: (no Gd)	201		225		282	
Total KW: (Gd)	32		55		106	
Total KW: 1200 gpm RO					65	

DUSEL WATER TREATMENT DESIGN OPTIONS:

Prepared for:

BROOKHAVEN NATIONAL LABORATORY

Job Site:

HOMESTAKE MINE
Lead, South Dakota.

2/10

12/09
DUSEL Water Treatment Design Options:

Index:

Piping and Sizing:	3
Vessel Specifications:	4
Ion Exchange Resin:	5
Motors:	6
Instrumentation and Controls:	7-8
PLC:	9
Membrane Degas:	10
Chillers:	11-15
Pretreatment Equipment. FILL:	16-17
Reverse Osmosis Equipment. FILL:	18
Post Treatment. FILL:	19-21
Detector Recirculation.300 gpm:	22-24
Detector Recirculation. 600 gpm:	25-27
Detector Recirculation, 1200 gpm:	28-30
Gadolinium Recirculation / Recovery:	**31**
Gadolinium Recirculation / Recovery 300 gpm:	**32-33**
Gadolinium Recirculation / Recovery 600 gpm:	**34-35**
Gadolinium Recirculation / Recovery 1200 gpm:	**36-37**

DUSEL Water Treatment Design Options:
Piping.

Material:

Pretreatment to Reverse Osmosis PVC Sch 80 socket weld.
Reverse Osmosis Stainless Steel welded and V clamp.
Post Treatment Deionization Fill PVDF Butt or Socket Fused.
Detector Recirculation PVDF Butt or Socket Fused.

Flow Velocity to be from 4FPS to 6 FPS.

Maximum pressures in system 150 psi. (Except piping if Fill is surface mount)

Pipe Sizes.

Fill:

Supply Piping:	6”
Pretreatment:	6” and 4”
Reverse Osmosis:	4”
Post Treatment:	4”

Polishing loop:

300 gallons per minute:	4”
600 gallons per minute:	6”
1200 gallons per minute:	8”

DUSEL Water Treatment Design Options:
Vessel Specifications.

Vessel Specifications:

ASME Coded.
All vessels are to be designed to have their contents replaced using Super Sacs.
All vessels to be mounted on/in a cage to accommodate transportation down Yates Shaft and when in mine be put on rails for transfer to site.
Cage around vessels to serve as Seismic Restraints.

Either 18" or 30" rails to be used. Wheels to be provided by others.

Special Fittings:

Mixed Bed and U/ Th Vessels are to be equipped with Resin replacement ports.
Resin Fill ,Top 18" Man way.
Resin Out Bottom 6" flange reduced to 4" sweep ell and Supplied with Butterfly Valve.

Vessel Specifications:	ASME
Dimensions:	63" X 144"
Cubic foot:	218
Empty weight:	1540 lbs.
Liner:	Polypropylene
Pipe size of Vessels:	
Depth Filter:	6" ANSI Flange
Carbon:	6" ANSI Flange
Water Softeners:	6" ANSI Flange
Mixbed Deionizers:	6" ANSI Flange inlet and outlet 18" Man way Top 6" Flange Bottom.
Uranium/Thorium:	6" ANSI Flange inlet and outlet 18" Man way Top 6" Flange Bottom.

DUSEL Water Treatment Design Options:
Ion Exchange Resins.

Ion Exchange Resin:

Mixed Bed and U/Th ion exchange resin will be replaced when exhausted and not regenerated.

Mixed Resin: **Ionac NM-60SG or equal.**

High Purity Ion Exchange resin consisting of a 1:1 chemically equivalent mixture of a gel Type 1 strong base anion and a strong acid cation exchange resin.
Specially treated to rapidly yield high resistivity and Low TOC values
Meets ASTM Type 1 applications of 18+ megohm water quality and < 3 delta ppb TOC.

Uranium and Thorium Resin: **Lewatit MP500 or equal.**

Type 1, macro porous Anion exchange resin with high total exchange capacity and bead integrity suited for applications where adsorption and desorption of Natural occurring organics are important.
Ion exchange resin used to meet the require reduction of Uranium and Thorium in the High Purity Water to a limit of U < 1.4 x 10- 15 g/g and Th < 8.3 x 10- 16 g/g.

Water Softener Resin: **ResinTech CG8 or equal.**

Premium coarse grade high capacity gel type sulfonated polystyrene cation resin supplied in the sodium form.
95% of beads in the minus 16 to 40 mesh range.
Color throw APHA no. 20 max as shipped.
Capacity 33,000 grains at 15 lbs NaCl /ft3.

DUSEL Water Treatment Design Options:
Motors/Pumps.

Standards:
All Motors, Controls and Instrumentation must comply with all National Testing Lab Standards as well as Local , State and DUSEL Authorities.

Motors: **Baldor Premium Efficient or equal.**

All motors to meet or exceed NEMA Premium Efficiency Standards.
All motor to be 460 volt 3 phase TEFC.

Pumps: **Griswold 811 ANSI Centrifugal or equal.**
All pumping applications to have spare pump installed, 1 running at a time. Manually or Auto switch over.

Skid mounted pump and motor.
Motor coupled.
Wetted material 316 Stainless Steel, Single Stage Fully open impeller.

DUSEL Water Treatment Design Options:
Instrumentation.

Flow: **Signet 8860 Transmitter or equal.**

Number of units: **7**
Digital Panel Mount Flow transmitters with integral mount Flow Sensors.
Outputs 4-20ma.
Paddle wheels to be Teflon and Titanium.

Resistivity Dissolved Oxygen, PH: **Thornton 770 MAX or equal.**

Number of units: **2**
Multi parameter panel mount Analyzer Transmitter
Range 0-18 megohm.
Instrument to be certified and certifiable with Certified Calibration adapter.
Minimum 6 inputs and 8 analog outputs 4-20ma per instrument.

Reverse Osmosis Conductivity: **Signet 8850 Transmitter or equal.**

Number of units: **1**
Panel Mount Transmitter.
2 channel conductivity with % rejection.
2 outputs 4-20 ma.

Pressure:

Visual:
Number of units: **24**
Transducer:
Number of units: **20**

Temperature:

Thermal Couple:
Number of units: **5**

DUSEL Water Treatment Proposal.

Instrumentation.

All instrumentation will be visual and have 4-20 ma outputs to PLC as follows:

	PSI	Flow	Conduct/Resist	Temp	4-20 output
FILL					
Supply Pipe	**P**				**P**
Depth Filter	P				P
Carbon	P				P
Water Softener	P				P
Pre filter	P				P
Reverse Osmosis					
Pump	P				P
Product	P	F	C	T	PFCT
Waste	P	F	C		PFC
Post Treatment Fill					
Post DI	P	F	R		PFR
Pre Filter UV	P				P
UV	P				
UV intensity					X
Post Filter UV	P				
Degas	P				
Degas O2					X
Chiller	P			T	PFRT
Fill Pipe	P	F	R	T	PFRT
Recirculation					
Detector Pumps	P	F	R	T	PFRT
Polishing DI	P		R		PR
U/ Th Removal	P		R		PR
Pre Filter UV	P				P
UV	P				P
UV intensity					X
Post Filter UV	P				P
Chiller	P	F		T	PFT
Degas	P				P
Degas O2					X
Return Pipe	P	F	R		PFR

DUSEL Water Treatment Design Options:
PLC.

PLC: GE RX3i system or equal.
IEC 1131-3 Compliant.

300Mhz CPU with 10Meg of memory 2 Serial Ports with Ethernet 10/100 Mbits 2 RJ45 connector and 1 IP address module.
Analog and Isolated input modules minimum 76 points. 120/240 Vac minimum 16 points.

RX3i supports:	32,000 DI
	32,000 DO
	32,000 AI
	32,000 AO
	32,000 internal registers

Minimum 15" TFT Quick panel.

View Standard Edition-Hardware Key
One Year Globalcare

Programming Software:

CIMPLICITY HMI Server 150 I/O Development and Runtime System.
Logic Developer PLC Professional.
Historian Standard Server 100 Points.
All licenses to be owned by project.

All Programming to be included.
Programming Software to come with one-year minimum Global Care.

DUSEL Water Treatment Design Options:
Membrane Degas.

Membrane Degas:	**Membrana Ligui-Cel or equal.**
Specifications:	**<0.6 mg/liter Oxygen.**
	CO2 free.

Vacuum and Nitrogen Sweep.
Vacuum pump to be supplied.
Nitrogen to be supplied by others.

Contactor Size:	10” X 40”
Material:	Polypropylene
Housing:	PVDF
O Rings:	Viton.
Retention Ring:	Teflon

Minimum Gas Removal:	97%

DUSEL Water Treatment Design Options:
Chillers

Fill Chiller Conditions:

Cool 250 GPM to 13°C
Cooling solution is 100% Ultra Pure ASTM Type 1 water
Condenser temperature is 0-95°F air
Chiller to include remote enable/disable contacts, remote alarm contacts and 4-20mA set point input with retransmit

Continuous operation chiller conditions:

Provide 181 kW of cooling
Cool 125 GPM of side stream water from recirculation stream to 10°C, controlling to a final input back to Detector of 13ºC.
20% Ethylene glycol solution required in chilled water loop
Separate chilled water flow from pure water will shell and tube heat exchanger
Chiller will have remote temperature probe to monitor either main tank temperature or process water tank temperature
Chiller to include remote enable/disable contacts, remote alarm contacts and 4-20mA set point input with retransmit

All surfaces in contact with the process water will be constructed out of 316SS. The control panels will be UL 508a certified.

2-Model MXR125 Remote Air-Cooled Condenser Chillers (460/3/60)

The system consists of two MXR125 independent modules that will be piped together in the field in series. One module will include the PLC with HMI, that will control both modules.

Design
230 tons of cooling
250 gpm of water to be cooled to 13ºC.
95°F condenser air

Mechanical Chiller
Copeland rotary screw compressor with integral oil separator and filter
Compressor unloading for capacity control
Stainless steel brazed plate evaporator
Liquid line solenoid valve
Liquid line refrigerant filter dryer
Electronic expansion valve
R-134a refrigerant

Mechanical Remote Condenser (shipped separately)
Remote outdoor air cooled condenser
Modular design with divided fan sections to prevent 'wind-milling' during fan cycling
Galvanized steel fan sections and coil baffles
Copper tube/aluminum fin coils tested to 400 PSIG
Condenser shipped pressurized with dry nitrogen
Direct drive multi-blade propeller fans with venture orifices to optimize efficiency
Variable Speed Electronic fan cycling and header variable speed controls to maintain proper refrigerant head pressure

Electrical
NEMA-4 control panel mounted and wired to compressor and sensors
MCA of each chiller module: 220 amps
MCA of each remote condenser module: 36 amps
Allen-Bradley Compact Logix PLC controller
Color touch-screen control interface
Display of compressor refrigerant discharge pressure, compressor refrigerant discharge temperature, compressor refrigerant suction pressure, compressor refrigerant suction temperature, compressor refrigerant superheat temperature, compressor running hours, compressor slide valve position (or % unloading), coolant type (user input for water, % Ethylene Glycol, % Propylene Glycol), electronic expansion valve position (% open),

evaporator water inlet temperature, evaporator water outlet temperature, and process water set point temperature

Alarms for compressor motor overload, evaporator freeze protection, evaporator low flow, oil low level, power loss of phase, process supply water above high temperature alarm set point, process supply water below low temperature alarm set point, refrigerant high pressure, refrigerant low pressure, and status banner of start-up and shut-down sequences

Safeties for compressor motor high temperature, compressor motor overload, compressor motor reverse rotation, evaporator freeze protection, evaporator low flow, oil low level, power loss of phase, refrigerant high pressure, and refrigerant low pressure

Control Functions for alarm history occurrence with reset date and time stamp, compressor anti-recycle timer, compressor enable/disable, condenser water regulating valve control capability, coolant type user input (water, % Ethylene Glycol, % Propylene Glycol), internal calendar and clock, password protection of adjustable parameters (two levels – user settable, and factory settable), process water high temperature alarm (adjustable as offset from set point or absolute), process water low temperature alarm (adjustable as offset from set point or absolute), remote alarm contact, remote start/stop, single point chilled water and cooling tower system enable, single point selection between English and Metric units of measure

Alarm horn with silence keypad

DUSEL Water Treatment Design Options:
Recirculation Chiller.

Model TSW80A Water Cooled Chiller & Reservoir (460/3/60

Design
52 tons (181 kW) of cooling
125 gpm of water to be cooled to 10ºC.
95°F condenser water

Mechanical
Hermetic scroll compressors
Compressor staging for capacity control
Two completely independent refrigeration circuits
Two water cooled shell & tube condensers with removable heads
Two mechanical condenser water regulating valves
Two stainless steel brazed plate evaporators
Two Y-strainers to protect evaporators from sediment
Two liquid line solenoid valves
Two liquid line refrigerant filter dryers
Two thermostatic expansion valves
425 gallon integral stainless steel reservoir with cover and divider
10 hp process pump designed for 125 gpm at 74 psi
Pump trim including suction legs, suction and discharge service valves, discharge check valve and discharge pressure gauge
Insulation of reservoir, cover and piping between pump and evaporators
Water level sight glass
Process return and overflow connections
Supply and return condenser water manifolds with isolation valves
Supply and return evaporator water manifolds with isolation valves
Model SX2000C Shell and Tube Teat Exchanger designed to cool the 117 GPM of process water 13°C to 7°C using 30°F chilled water.

DUSEL Water Treatment Design Options:
Chillers (cont)

Electrical
NEMA-4 control panel mounted and wired to compressors and sensors
Allen-Bradley 5/03 PLC controller
Maple Systems 7.7 inch, 256 color, 600 x 480 resolution DSTN touch screen control interface with ultra fast 133 MHz processor
Digital set point and high temperature alarm adjustment with password protection
Digital display of process water supply, return and set point temperatures
Digital display of condenser water supply and return temperature
Compressor load analysis (% capacity)

DUSEL Water Treatment Design Options:
Recirculation Chiller.

Compressor anti-cycle timer
Compressor running hours
Automatic compressor lead/lag
Status lights on PLC internal I/O cards
Mechanical safety interlocks for each circuit low flow, high refrigerant pressure, low refrigerant pressure, freezestat, compressor fault and pump fault
System faults for high and low temperature deviation alarms and probe fault alarm
Alarm horn with silence keypad
Process pump starter in control panel
Chiller pump starter in control panel
Pumps wired to control panel

Pretreatment Detector Fill.

Pretreatment Equipment used to insure Reverse Osmosis performance.
Pretreatment loads based on 300 gallons per minute and enclosed water analysis as follows.
Supplied by Lead-Deadwood Sanitary District.

Conductivity:	494 umho/cm
Hardness:	259 mg/L (15.1 grains)
Iron:	0.06 mg/L
TSS:	260 mg/L
Chlorine:	none reported

Water Softener load.

150kTon Detector:	600,000,000	grains
200kTon:	750,000,000	grains

In order of installation.
Depth Filtration removal of TSS down to 10 micron.
Carbon Filtration rated for Chlorine and Organic removal.
Water Softeners removal of water hardness.
Ultraviolet Sterilization, bacteria removal
Cartridge Filtration 5 Micron.

Pretreatment Equipment has be designed to Regenerate / Backwash and Filter change outs without interruption of Fill if supply water is delivered at a minimum of 600 gpm.

DUSEL Water Treatment Design Options:
Pretreatment. Detector Fill (cont')

Pretreatment Equipment.

Depth Filters.	SCWDF63144
Manufacturer:	South Coast Water
Duplex Automatic:	Pressure Backwash
Vessel Size:	63" X 144"
Vessel Material:	Filament Wound Fiberglass
Cubic Feet:	150
Service Flow Rate:	350
Backwash Flow Rate:	290
Carbon Filters:	SCWCAR63144
Manufacturer:	South Coast Water
Duplex Automatic:	Timed Backwash
Vessel Size:	63" X 144"
Vessel Material:	Filament Wound Fiberglass
Cubic Feet:	150
Service Flow Rate:	350
Backwash Flow Rate:	300
Water Softeners:	SCWWSDUP63144
Manufacturer:	South Coast Water
Duplex Automatic:	Metered Regeneration
Vessel Size:	63" X 144"
Vessel Material:	Filament Wound Fiberglass
Cubic Feet:	200
Service Flow Rate:	370
Backwash Flow Rate:	120
Salt use per regeneration:	3000 lbs
Grains Removal:	6,000,000 per regeneration
Ultraviolet Sterilizer:	M250
Manufacturer:	Atlantic
Flow rate:	450 gallons per minute
Wavelength:	254nm
Number of lamps:	19
Pre Fitters:	36FOS4316
Manufacturer:	Shelco
Flow rate:	450 gallons per minute
Filters:	36, 40" 5 micron

DUSEL Water Treatment Design Options:
Reverse Osmosis. Detector Fill

Reverse Osmosis. Detector Fill.

Reverse Osmosis unit used to reduce TDS and TSS prior to Deionization / Post Treatment.
Reverse Osmosis flow rate is 250 gallons per minute at 150 psi with minimum 70% Recovery and 95% Rejection.
Based on current Lead-Deadwood Sanitary District conductivity 494 umho/cm and RO rejection at 95% product water will be 24 umho/cm.
Flow rates and Rejections based on 50F / 10C.

Reverse Osmosis piping:	
Feed:	Stainless
Product:	Polypro
Waste:	PVC
Instrumentation:	
Feed:	Pressure, Flow, TDS
Product:	Pressure, Flow, TDS
Waste:	Pressure, Flow, TDS
Reverse Osmosis Pumps:	811L-3X1.5-13 A20
Manufacturer:	Griswold
Number of pumps:	2-1 running 1 as standby
Material:	316 Stainless Steel
Flow/Pressure:	300 gpm / 150 psi
Horse Power:	125 hp. 84.9 hp at 300 gpm
Motor:	Premium Efficient TEFC
Voltage:	460 3 phase
Reverse Osmosis Housings:	80A60
Housing Manufacture:	Code Line
Housing model #:	80A60
Number of Housings:	12
Number of Membranes:	6 per housing
Staging:	8-4
Size:	8” X 259”
Reverse Osmosis Membranes:	ESPA2-LD
Manufacturer:	Nitto Denko / Hydranautics
Number of Membranes:	72
Membrane per Housing:	6
Number of Membranes 1st Stage:	48
Number of Membranes 2nd Stage:	2

DUSEL Water Treatment Design Options:
Post Treatment. Detector Fill

Post Treatment. Detector Fill.

Post Treatment Equipment used to Polish Water from the Fill phase of the Reverse Osmosis Unit.
Lowering TOC levels, Increasing Water Quality to 18 meg ohms, removing bacteria, Chilling / Cooling water, and Degassing water.

In order of installation:

TOC Unit using 185 nm wavelengths to ionize organics and removed via DI.

Uranium / Thorium Reduction using one time Ion Exchange Resins, Anion type in OH form.

Deionizers using one time Ion Exchange Resins, Semiconductor grade low TOC type resin.
Removing remaining TDS from the RO product raising water quality to 18 meg ohms.

Pre Filters removing any TSS that my interfere with UV wavelength.

Ultraviolet Sterilizer reducing Bacteria level

Post Filters removing altered Bacteria to 1 micron.

Degasification using Vacuum and Nitrogen regass to remove excess gas.

Chiller used to reduce water temperature to Detector.

Note:
Deionizers and Uranium/ Thorium Vessels are designed for ion exchange resin change outs not Regenerations.
Vessels are equipped with Resin In and Out ports for ease of replacement.
Estimated cubic feet of Resin needed for fill:
(Based on RO rejection 95% and Product water at 24 umho/cm.)

	150kTon	200kTon
DI:	4000 cu ft.	5000 cu ft.
U/Th:	600 cu ft	600 cu ft

DUSEL Water Treatment Design Options:
Post Treatment. Detector Fill (cont')

TOC Unit:	M150
Manufacturer:	Atlantic
Number of Units:	1
Flow Rate:	250 gallons per minute
Wavelength:	185 nm
Number of Lamps:	12
Power Requirements:	230 volt 4.7 amps
Deionizers:	SCWDIMB63144
Manufacturer:	South Coast Water
Number of Units:	4, 2 on 2 as stand by
Unit Size:	63" X 144"
Vessel Material:	Filament Wound Fiberglass
Flow rate:	200 gallons per minute / unit.
Total Flow:	250 gallons per minute /bank of 3
Cubic foot:	200 cubic foot / unit 600 cubic foot / bank
Uranium / Thorium Reduction:	SCWUTR63144
Manufacturer:	South Coast Water
Number of Units:	4, 2 on 2 as stand by
Unit Size:	63" X 144"
Vessel Material:	Filament Wound Fiberglass
Flow Rate:	200 gallons per minute / unit
Total Flow:	250 gallons per minute / bank
Cubic foot:	200 cubic foot / unit
Pre Filters: Housing	36FOS4SB-316
Manufacturer:	Shelco
Number of Housings:	2
Flow rate:	250 gallons per minute ea
Filters:	36, 40" 1 micron ea
Ultraviolet Sterilizer:	M150
Manufacturer:	Atlantic
Number of Units:	1
Flow rate:	250 gallons per minute
Wavelength:	254nm
Number of lamps:	12
Number of Lamps:	12
Power Requirements:	230 volt 4.7 amps

DUSEL Water Treatment Design Options:
Post Treatment. Detector Fill (cont')

Post Filters: Housing	36FOS4SB-316
Manufacturer:	Shelco
Number of Housings:	2
Flow rate:	250 gallons per minute ea.
Filters:	36, 40" 0.1 micron ea.
Degasification:	1040
Manufacturer:	Membrana / Liqui-Cel
Type:	Membrane Contactors
Number of Contactors:	4-10"X40"
Flow Rate:	300 gallons per minute
Vacuum Pump:	
Type:	Liquid Ring
HP:	4 TEFC
Vacuum:	43 (acfm)
Vacuum Level:	50 (mm Hg abs)
Chiller:	MXR125
Manufacturer:	Thermal Care
Number of Units:	2
Flow Rate:	250 gallons per minute
Cooling Target:	13ºC
Cooling Range:	16 to 25ºC

DUSEL Water Treatment Design Options:
Detector Recirculation: 300 gallons per minute

Detector Recirculation: 300 gallons per minute.
Recirculation System is used to maintain Detector Water Purity and Temperature and meet and maintain ASTM Type 1 Water Quality:

Electrical Conductance:	.056 ms/cm @ 298K (25ºC)
Specific Resistivity megohm/cm:	18.0
PH:	N.A.
Total Organic Carbon: (TOC)	100 μG/L Max
Sodium:	1 μG/L Max
Chlorides:	1 μG/L Max
Silica:	3 μG/L Max
Bacteria:	<10/1000 ml
Endotoxin, EU3:	<0.03

The Recirculation Package has ALL the same aspects as the Post Treatment System but has been adjusted for flow rate and is self-contained to the Detector in recirculation. Once the Fill System has reached minimum level in the Detector. The Detector Pumps can be safely turned on and recirculation will begin.

In order of installation:

Detector Pumps transfer water to Polishing System and Return back to Detector.

TOC Unit using 185 nm wavelength to ionize organics and remove via DI.

Uranium / Thorium Reduction is using one time Ion Exchange Resins Anion type 1 in OH form.

Deionizers using selective non-regenerating Ion Exchange Resins, Semiconductor grade low TOC
Removing remaining TDS from the RO product raising water quality to 18 meg ohms.

Pre Filters removing any TSS that my interfere with UV wavelength.

Ultraviolet Sterilizer reducing Bacteria level.

Post Filters removing altered Bacteria to 1 micron.

Degasification using Vacuum and Nitrogen regass to remove excess gas.

Chiller used to maintain water temperature in Detector.

DUSEL Water Treatment Design Options:
Detector Recirculation: 300 gallons per minute. (cont')

Detector Pumps:	3X2-10A60
Manufacturer:	Griswold
Number of pumps:	2-1 running 1 as standby
Material:	316 Stainless Steel
Flow/Pressure:	300 gpm / 80 psi
Horse Power:	60 hp. 41.8 hp at 300 gpm.
RPM:	3500
Motor:	Premium Efficient TEFC
Voltage:	460 3 phase
TOC Unit:	M150
Manufacturer:	Atlantic
Flow Rate:	300 gallons per minute
Wavelength:	185 nm
Number of Lamps:	12
Deionizers:	SCWDIMB63144
Manufacturer:	South Coast Water
Number of Units:	4-2 on 2 as stand by
Unit Size:	63" X 144"
Vessel Material:	Filament Wound Fiberglass
Flow rate:	200 gallons per minute / unit.
Total Flow:	300 gallons per minute /bank of 3
Cubic foot:	200 cubic foot / unit 600 cubic foot / bank
Uranium / Thorium Reduction:	SCWUTR63144
Manufacturer:	South Coast Water
Number of Units:	4-2 on 2 as stand by
Unit Size:	63" X 144"
Vessel Material:	Filament Wound Fiberglass
Flow Rate:	200 gallons per minute / unit
Total Flow:	300 gallons per minute / bank
Cubic foot:	200 cubic foot / unit

DUSEL Water Treatment Design Options:
Detector Recirculation: 300 gallons per minute. (Cont')

Pre Filters: Housing	36FOS4SB-316
Manufacturer:	Shelco
Number of Housings:	2
Flow rate:	300 gallons per minute ea
Filters:	36-40" 1 micron ea
Ultraviolet Sterilizer:	M150
Manufacturer:	Atlantic
Flow rate:	300 gallons per minute
Wavelength:	254nm
Number of lamps:	12
Post Filters: Housing	36FOS4SB-316
Manufacturer:	Shelco
Number of Housings:	2
Flow rate:	250 gallons per minute ea
Filters:	36-40" 0.1 micron ea
Degasification:	1040
Manufacturer:	Membrana / Liqui-Cel
Type:	Membrane Contactors
Number of Contactors:	4-10"X40"
Flow Rate:	300 gallons per minute
Vacuum Pump:	
Type:	Liquid Ring
HP:	4 TEFC
Vacuum:	43 (acfm)
Vacuum Level:	50 (mm Hg abs)
Chiller:	TSW80A
Manufacturer:	Thermal Care
Number of Units:	1
Flow Rate:	117 gallons per minute
Cooling Target:	50ºF
Cooling Range:	60ºF to 50ºF

DUSEL Water Treatment Design Options:
Detector Recirculation: 600 gallons per minute

Detector Recirculation: 600 gallons per minute.

The Recirculation Package has ALL the same aspects as the Post Treatment System but has been adjusted for flow rate and is self-contained to the Detector in recirculation. Once the Fill System has reached minimum level in the Detector. The Detector Pumps can be safely turned on and recirculation will begin.

In order of installation:

Detector Pumps transfer water to Polishing System and Return back to Detector.

TOC Unit using 185 nm wavelength to ionize organics and remove via DI.

Uranium / Thorium Reduction is using one time Ion Exchange Resins Anion type 1 in OH form.

Deionizers using selective non-regenerating Ion Exchange Resins, Semiconductor grade low TOC
Removing remaining TDS from the RO product raising water quality to 18 meg ohms.

Pre Filters removing any TSS that my interfere with UV wavelength.

Ultraviolet Sterilizer reducing Bacteria level.

Post Filters removing altered Bacteria to 1 micron.

Degasification using Vacuum and Nitrogen regass to remove excess gas.

Chiller used to maintain water temperature in Detector.

DUSEL Water Treatment Design Options:
Detector Recirculation: 600 gallons per minute. (cont')

Detector Pumps:	811M-4X3-10A70
Manufacturer:	Griswold
Number of pumps:	2-1 running 1 as standby
Material:	316 Stainless Steel
Flow/Pressure:	600 gpm / 80 psi
Horse Power:	100 hp. 72.4hp at 600 gpm.
RPM:	3500
Motor:	Premium Efficient TEFC
Voltage:	460 3 phase
TOC Unit:	M150
Manufacturer:	Atlantic
Flow Rate:	300 gallons per minute ea
Number of Units:	2
Wavelength:	185 nm
Number of Lamps:	12 ea Total 24
Deionizers:	SCWDIMB63144
Manufacturer:	South Coast Water
Number of Units:	6-3 on 3 as stand by
Unit Size:	63" X 144"
Vessel Material:	Filament Wound Fiberglass
Flow rate:	200 gallons per minute / unit.
Total Flow:	600 gallons per minute /bank of 3
Cubic foot:	200 cubic foot / unit 600 cubic foot / bank
Uranium / Thorium Reduction:	SCWUTR63144
Manufacturer:	South Coast Water
Number of Units:	6-3 on 3 as stand by
Unit Size:	63" X 144"
Vessel Material:	Filament Wound Fiberglass
Flow Rate:	200 gallons per minute / unit
Total Flow:	600 gallons per minute / bank
Cubic foot:	200 cubic foot / unit

DUSEL Water Treatment Design Options:
Detector Recirculation: 600 gallons per minute. (Cont')

Pre Filters:Housing	36FOS4SB-316
Manufacture:	Shelco
Number of Housings:	4
Flow rate:	300 gallons per minute ea
Filters:	36-40" 1 micron ea
Ultraviolet Sterilizer:	M150
Manufacture:	Atlantic
Flow Rate:	300 gallons per minute ea
Number of Units:	2
Wavelength:	254 nm
Number of Lamps:	12 ea Total 24
Post Filters: Housing	36FOS4SB-316
Manufacturer:	Shelco
Number of Housings:	4
Flow rate:	300 gallons per minute ea
Filters:	36- 40" 0.1 micron ea
Degasification:	1040
Manufacturer:	Membrana / Liqui-Cel
Type:	Membrane Contactors
Number of Contactors:	9-10"X40"
Flow Rate:	600 gallons per minute
Vacuum Pump:	
Type:	Liquid Ring
HP:	5 TEFC
Vacuum:	54 (acfm)
Vacuum Level:	50 (mm Hg abs)
Chiller:	TSW80A
Manufacturer:	Thermal Care
Number of Units:	1
Flow Rate:	117 gallons per minute
Cooling Target:	50ºF
Cooling Range:	60ºF to 50ºF

DUSEL Water Treatment Design Options:
Detector Recirculation: 1200 gallons per minute

Detector Recirculation: 1200 gallons per minute.

The Recirculation Package has All the same aspects as the Post Treatment System but has been adjusted for flow rate and is self-contained to the Detector in recirculation.
Once the Fill System has reached minimum level in the Detector. The Detector Pumps can be safely turned on and recirculation will begin.

We have included a 1200 gallon per minute High Recovery Reverse Osmosis Unit in this recirculation system. The RO will be feed by the Detector Pumps . The RO will be a 4 Stage Unit allowing High Recovery.

In order of installation:

Detector Pumps transfer water to Polishing System and Return back to Detector.

1200 gallon per minute High Recovery Reverse Osmosis Unit.

TOC Unit using 185 nm wavelength to ionize organics and remove via DI.

Uranium / Thorium Reduction is using one time Ion Exchange Resins Anion type 1 in OH form.

Deionizers using selective non-regenerating Ion Exchange Resins, Semiconductor grade low TOC
Removing remaining TDS from the RO product raising water quality to 18 meg ohms.

Pre Filters removing any TSS that my interfere with UV wavelength.

Ultraviolet Sterilizer reducing Bacteria level.

Post Filters removing altered Bacteria to 1 micron.

Degasification using Vacuum and Nitrogen regass to remove excess gas.

Chiller used to maintain water temperature in Detector.

DUSEL Water Treatment Design Options:
Detector Recirculation: 1200 gallons per minute. (cont')

Detector Pumps:	811-6X4-GA80
Manufacturer:	Griswold
Number of pumps:	2-1 running 1 as standby
Material:	316 Stainless Steel
Flow/Pressure:	1200 gpm / 80 psi
Horse Power:	200 hp. 141hp@ 1200 gpm
RPM:	3500
Motor:	Premium Efficient TEFC
Voltage:	460 3 phase
Reverse Osmosis Pumps:	811-6X4-GA80
Manufacturer:	Griswold
Number of pumps:	2, 1 running 1 as standby
Material:	316 Stainless Steel
Flow/Pressure:	1200 gpm / 80 psi
Horse Power:	200 hp. 141hp@ 1200 gpm
RPM:	3500
Motor:	Premium Efficient TEFC
Voltage:	460 3 phase
Reverse Osmosis Housings:	80A60
Housing Manufacture:	Code Line
Housing model #:	80A60
Number of Housings:	48
Number of Membranes:	6 per housing
Staging:	30-12-5-1
Total Waste:	50 gpm
Size:	8" X 259"
Reverse Osmosis Membranes:	ESPA2-LD
Manufacturer:	Nitto Denko / Hydranautics
Number of Membranes:	288
Membrane per Housing:	6
Number of Membranes 1st Stage:	180
Number of Membranes 2nd Stage:	72
Number of Membranes 3rd	30
Number of Membranes 4th	6

DUSEL Water Treatment Design Options:
Detector Recirculation: 1200 gallons per minute. (cont')

TOC Unit:	M250
Manufacturer:	Atlantic
Flow Rate:	400 gallons per minute ea
Number of Units:	3
Wavelength:	185 nm
Number of Lamps:	19 ea Total 57
Deionizers:	SCWDIMB63144
Manufacturer:	South Coast Water
Number of Units:	12-6 on line 6 as standby
Unit Size:	63" X 144"
Vessel Material:	Filament Wound Fiberglass
Flow rate:	200 gallons per minute / unit.
Total Flow:	1200 gallons per minute /bank of 3
Cubic foot:	200 cubic foot / unit 600 cubic foot / bank
Uranium / Thorium Reduction:	SCWUTR63144
Manufacturer:	South Coast Water
Number of Units:	6
Unit Size:	63" X 144"
Vessel Material:	Filament Wound Fiberglass
Flow Rate:	200 gallons per minute / unit
Total Flow:	1200 gallons per minute / bank
Cubic foot:	200 cubic foot / unit

DUSEL Water Treatment Design Options:
Detector Recirculation: 1200 gallons per minute. (Cont')

Pre Filters: Housing	36FOS4SB-316
Manufacturer:	Shelco
Number of Housings:	4
Flow rate:	300 gallons per minute ea
Filters:	52, 40" 1 micron ea
Ultraviolet Sterilizer:	M250
Manufacturer:	Atlantic
Flow Rate:	400 gallons per minute ea
Number of Units:	3
Wavelength:	254 nm
Number of Lamps:	19 ea Total 57
Post Filters: Housing	36FOS4SB-316
Manufacturer:	Shelco
Number of Housings:	4
Flow rate:	300 gallons per minute ea
Filters:	52-40" 0.1 micron ea
Degasification:	1040
Manufacturer:	Membrana / Liqui-Cel
Type:	Membrane Contactors
Number of Contactors:	15- 10"X 40"
Flow Rate:	1200 gallons per minute
Vacuum Pump:	
Chiller:	TSW80A
Manufacturer:	Thermal Care
Number of Units:	1
Flow Rate:	117 gallons per minute
Cooling Target:	50ºF
Cooling Range:	60ºF to 50ºF

Gadolinium Recirculation / Recovery.

The Gadolinium System primarily is to remove the Gadolinium or Split it out of the Pure Water as it comes from the Detector prior to the Polishing System Equipment. If allowed to enter the Polishing System Equipment the Gadolinium would be removed by ion exchange in the Mixed Bed Polishers.

Gadolinium in High Purity Water as a recovery system at the time of this proposal is only in test stages and no known operating system exists today.

The test Systems that have been shown to work by removing the Gadolinium while maintaining the Polishing System Loop have been by using Membrane technologies and EDI either in combination or separate.

EDI is problematic because of the out gassing electrolytes stream in a mine.

These Systems remove the Gadolinium in the Reject streams of NF and RO membranes and polish the Product stream by EDI prior to the Polishing Loop.

For the purpose of Pricing in this proposal we have used the current membrane technology and assume that the Gadolinium is pure and has been pretreated prior to injection into High Purity Detector.

DUSEL Water Treatment Design Options:
Gadolinium Recirculation / Recovery 300 gpm

Nanofiltration and Reverse Osmosis. 300 gallon per minute

Instrumentation:	
Feed:	Pressure, Flow, TDS
Product:	Pressure, Flow, TDS
Waste:	Pressure, Flow, TDS
Nanofiltration Membranes Housings:	
Housings:	80A60
Housing Manufacture:	Code Line
Housing model #:	80A60
Number of Housings:	12
Number of Membranes:	6 per housing
Staging:	8-4
Size:	8” X 259”
Nanofiltration Membranes:	ESNA1-LF8040
Manufacturer:	Nitto Denko / Hydranautics
Number of Membranes:	72
Membrane per Housing:	6
Number of Membranes 1st Stage:	72
Reverse Osmosis Pumps:	811L-3X1.5-13 A20
Manufacturer:	Griswold
Number of pumps:	2-1 running 1 as standby
Material:	316 Stainless Steel
Flow/Pressure:	300 gpm / 150 psi
Horse Power:	125 hp. 84.9 hp at 300 gpm
Motor:	Premium Efficient TEFC
Voltage:	460 3 phase
Reverse Osmosis Housings:	80A60
Housing Manufacture:	Code Line
Housing model #:	80A60
Number of Housings:	12
Number of Membranes:	6 per housing
Staging:	8-4
Size:	8” X 259”

DUSEL Water Treatment Design Options:
Gadolinium Recirculation / Recovery 300 gpm (cont')

Reverse Osmosis Membranes:	ESPA2-LD
Manufacturer:	Nitto Denko / Hydranautics
Number of Membranes:	72
Membrane per Housing:	6
Number of Membranes 1st Stage:	48
Number of Membranes 2nd Stage:	24

DUSEL Water Treatment Design Options:
Gadolinium Recirculation / Recovery 600 gpm

Nanofiltration and Reverse Osmosis. 600 gallon per minute

Instrumentation:	
Feed:	Pressure, Flow, TDS
Product:	Pressure, Flow, TDS
Waste:	Pressure, Flow, TDS
Nanofiltration Membrane Housings:	
Housings:	80A60
Housing Manufacture:	Code Line
Housing model #:	80A60
Number of Housings:	24
Number of Membranes:	6 per housing
Size:	8" X 259"
Nanofiltration Membranes:	ESNA1-LF8040
Manufacturer:	Nitto Denko / Hydranautics
Number of Membranes:	144
Membrane per Housing:	6
Number of Membranes 1st Stage:	144
Reverse Osmosis Pumps:	811M-4X3-10A70
Manufacturer:	Griswold
Number of pumps:	2, 1 running 1 as standby
Material:	316 Stainless Steel
Flow/Pressure:	600 gpm / 80 psi
Horse Power:	100 hp. 72.4hp at 600 gpm.
RPM:	3500
Motor:	Premium Efficient TEFC
Voltage:	460 3 phase
Reverse Osmosis Housings:	80A60
Housing Manufacture:	Code Line
Housing model #:	80A60
Number of Housings:	24
Number of Membranes:	6 per housing
Staging:	16-8
Size:	8" X 259"

DUSEL Water Treatment Design Options:
Gadolinium Recirculation / Recovery 600gpm (cont')

Reverse Osmosis Membranes:	ESPA2-LD
Manufacturer:	Nitto Denko / Hydranautics
Number of Membranes:	144
Membrane per Housing:	6
Number of Membranes 1st Stage:	96
Number of Membranes 2nd Stage:	48

DUSEL Water Treatment Design Options:
Gadolinium Recirculation / Recovery 1200gpm

Nanofiltration and Reverse Osmosis. 1200 gallon per minute

Instrumentation:	
Feed:	Pressure, Flow, TDS
Product:	Pressure, Flow, TDS
Waste:	Pressure, Flow, TDS
Nanofiltration Membrane Housings:	
Housings:	80A60
Housing Manufacture:	Code Line
Housing model #:	80A60
Number of Housings:	48
Number of Membranes:	6 per housing
Size:	8" X 259"
Nanofiltration Membranes:	ESNA1-LF8040
Manufacturer:	Nitto Denko / Hydranautics
Number of Membranes:	288
Membrane per Housing:	6
Number of Membranes 1st Stage:	288
Reverse Osmosis Pumps:	811-6X4-GA80
Manufacturer:	Griswold
Number of pumps:	2, 1 running 1 as standby
Material:	316 Stainless Steel
Flow/Pressure:	1200 gpm / 80 psi
Horse Power:	200 hp. 141hp@ 1200 gpm
RPM:	3500
Motor:	Premium Efficient TEFC
Voltage:	460 3 phase
Reverse Osmosis Housings:	80A60
Housing Manufacture:	Code Line
Housing model #:	80A60
Number of Housings:	48
Number of Membranes:	6 per housing
Staging:	32-16
Size:	8" X 259"

DUSEL Water Treatment Design Options:
Gadolinium Recirculation / Recovery 1200gpm (cont')

Reverse Osmosis Membranes:	ESPA2-LD
Manufacturer:	Nitto Denko / Hydranautics
Number of Membranes:	288
Membrane per Housing:	6
Number of Membranes 1st Stage:	192
Number of Membranes 2nd Stage:	96

	LBNE Water Cherenkov Detector **BASIS of ESTIMATE FORM (BoE)**	**Date of Estimate: 21-July-2011** **Revision #: -** **Prepared By: Jack Fowler** **Approved By:** **Level 2 Manager**

WBS Number:	**WBS Title:**
130.04.06.04	**Water Shaft System**

WBS Dictionary:

This WBS Element covers the requirements, specification, engineering development, and installation of the Water Shaft System. The Water Shaft System consist of the piping and flow elements necessary to move water from the surface fill system to the recirculation system at the 4850L. This system is currently planned to be installed in the Yates shaft, but this is subject to the refurbishment plans of the shaft and the surface infrastructure. The system will be fabricated with components that are compatible with ultrapure water. It will consist of vertical pipe runs with pressure reduction stations at various levels down the shaft. Provisions will be made at each of the pressure reduction stations to accommodate the addition of pumps needed to remove Gd laced water from the detector, if the Gd option is pursued.

Tasks included under this WBS element will bring the physics requirements and engineering specifications to maturity, and complete design drawings, engineering analysis, interface specifications, and safety and risk assessments. The process will include at a minimum Conceptual, Preliminary, and Final Design.

Cost Type **(check all that apply):**	**Costing Method** **(check all that apply):**
_*_ EDIA Material _*_ EDIA Labor _*_ MFG Material _*_ MFG Labor	_*_ Engineering Judgment ___Physicist Estimate ___ Level of Effort ___ Vendor Quote (attached) ___ Catalog Price (specify) ___ Prior purchase ___ Prior experience _*_ Parametric Estimate ___ Other- Description:_____

Attach Relevant Documents (including but not limited to):

M&S Contingency (%)**: 10%**	**Labor Contingency** (%)**: 21%**

Basis of Estimate
Details of Estimate: This estimate includes the costs for the development of the requirements, specifications, design, procurement, and installation of the water shaft system. It is expected that after the requirements, specifications, and design are complete, the procurement and installation will be done in conjunction with the outfitting of the Yates shaft. Travel to Homestake is included for oversight of the installation. Specifically, the estimate includes piping, pipe hangers and supports, valves, flow meters, pressure reduction valves, pressure transducers, and the necessary monitoring equipment need for reliable and safe operation. Also included is the associated hardware needed for the addition of pumps at each of the pressure reduction levels to accommodate the Gd option. The construction cost estimate was completed by LLNL estimators. A copy of the detailed estimate is attached. All components of the system will be compatible with ultrapure water. The piping will be passivated stainless steel, with flanged type fittings and compatible seals. Welding of the pipe is not allowed unless the material can be properly cleaned and treated in the weld affected area. Also, welding in the shafts introduces additional fire risks and proper precautions and procedures would be necessary. It has been determined that the flanged fittings allow for the most cost effective design that is compatible with ultrapure water. Costs for the QC of the specific raw material lots used in the system are not included here, but in 1.4.6.8 Material Compatibility. Labor Details Table 1 provides detail of the labor hours by job function from Preliminary Design (FY11) through installation (FY15) for the Shaft System WBS of the Water System. Engineering hours are estimated at an average of 20 % FTE for FY 11 through 15. These hours are to work with conventional facilities, the far site, and contractors on requirements, interfaces, and the specific design. It is expected that there will be several reviews for this system and weekly teleconferences for status updates. Assumptions/Interfaces The shaft system only consists of the piping, supports, and pressure reduction stations in the vertical shaft. Piping from the surface fill system in the Yates crusher room to the shaft piping, and from the shaft piping to the recirculation system in drift 636 is not included in this estimate. All pumps and piping for this is included in Conventional Facilities. This WBS element will not follow the current CD schedule, but will follow the shaft refurbishment schedule with the conventional facilities A&E firms. We will have LBNE reviews of this system at each of the design stages with conventional facilities.

FORM 2

CONSTRUCTION COST ESTIMATE

BID COST SUMMARY SHEET

Project Title:	DUSEL - Homestake Mine	Date:	10-Mar-11
	Purified Water Shaft Piping Fill System. Rev1	PFN:	TBD
Facility ID:	Lead, South Dakota	Work Order Number:	TBD
Requestor:	Sally Marie Bahowick		
Project Number:	34227	Estimator:	John Draper
Task Number:	72540	CEP Lead:	Lee Phillips
Estimate Class:	Class 5 - ROM	Projects Lead:	Michael Cowen
Funding Source:	STE-WFO DOE NO FEE/LD		

DESCRIPTION	UNIT	6 IN. STAINLESS STEEL PIPE SYS.	CLEANING & PASSIVATION	TOTAL
ESTIMATED DIRECT CONSTRUCTION COST		3,026,653	190,535	3,217,188
LABOR, SUPERVISION, MATERIAL & EQUIPMENT	INC.			
NEGOTIATED LABOR RATE (inc. fringes) OF $ 57.11	INC.			
SALES TAX on MATERIAL OF 8.00 %	INC.			
GENERAL CONDITIONS 10.00 %	INC.			
CONSTRUCTION / DESIGN COMPLETION FACTOR 10.00 %	INC.			
ESCALATION (Mid-Point Of Construction) 1/5/13 3.97 %	INC.			
CONTRACTOR OVERHEAD, BOND & INSURANCE OF 12.00 %	INC.			
CONTRACTOR PROFIT OF 15.00 %	INC.			
ESTIMATED CONSTRUCTION COSTS (BID)		$ 3,026,653	$ 190,535	$ 3,217,188
CONTRACTOR'S PROPOSED CONSTRUCTION COSTS			$ -	$ -
DELTA		$ 3,026,653	$ 190,535	$ 3,217,188

ESTIMATE SHEET

ESTIMATE CLASS: Class 5 - ROM | **PFN:** TBD

PROJECT TITLE: DUSEL - Homestake Mine | **PROJECT & TASK:** 34227 - 72540

Purified Water Shaft Piping Fill System. Rev1 | **WORK ORDER:** TBD

FACILITY ID: Lead, South Dakota | **DATE:** 10-Mar-11

DETAILS: MECHANICAL

Requester	Estimator	Checker
Sally Marie Bahowick	John Draper	

Description	Unit	Qty	Unit Labor Hours	Unit Material Cost	Labor Cost	Material Cost	Total
Installation:							
Surface Elevation							
Fab. & install 6 in. Stainless Steel (S.S.) pipe from surface point to entry	LF	100	0.65	100.00	5392	13852	19,243
Install pipe supports	EA	12	3.00	100.00	2986	1482	4,468
Below Surface Elevation							
Minus 800 ft.							
Fab. & install 6 in. Sch. 40 Stainless Steel (S.S.) piping in Yates mine sha	LF	800	0.65	100.00	43134	98813	141,947
Install thermal expansion loops for piping system @ approx. 200 ft interva	EA	4	8.00	500.00	2654	2470	5,125
Fab. & install pipe loop extension into drift levels with isolation valves	EA	1	80.00	10000.00	6636	12352	18,988
Install pressure reducing valve assembly @ ea. drift level - Allowance	EA	1	160.00	70000.00	13272	86461	99,733
Install water hammer pressure suppression tank - Allowance	EA	1	32.00	2000.00	2654	2470	5,125
Install pressure relief valves @ ea. drift level - Allowance	EA	1	32.00	500.00	2654	618	3,272
Install pressure monitoring transducers - Allowance	EA	1	32.00	500.00	2654	618	3,272
Install flow meters @ ea. Drift level	EA	1	16.00	2600.00	1327	3211	4,539
Install bypass systems @ ea. Drift level	LS	1	40.00	8000.00	3318	9881	13,199
Install hanger supports for pipe down shaft @ 10 ft. spacing	EA	80	4.00	100.00	26544	9881	36,425
Install pipe support stand for pressure reducing station	LS	1	16.00	400.00	1327	494	1,821
Instrumentation alarm devices, reading of pressure, flow & leakage - Allov	LS	1	40.00	2000.00	3318	2470	5,788
Difficulty Factor (Allowance) (3% per 100 ft based on labor hrs. for sec.	LS	1	316.80		26279		26,279
Minus 1700 ft.							
Fab. & install 6 in. Sch. 40 Stainless Steel (S.S.) piping in Yates mine sha	LF	900	0.65	100.00	48526	111165	159,690
Install thermal expansion loops for piping system @ approx. 200 ft interva	EA	4	8.00	500.00	2654	2470	5,125
Fab. & install pipe loop extension into drift levels with isolation valves	EA	1	80.00	10000.00	6636	12352	18,988
Install pressure reducing valve assembly @ ea. drift level - Allowance	EA	1	160.00	70000.00	13272	86461	99,733
Install water hammer pressure suppression tank - Allowance	EA	1	32.00	2000.00	2654	2470	5,125
Install pressure relief valves @ ea. drift level	EA	1	32.00	500.00	2654	618	3,272
Install pressure monitoring transducers	EA	1	32.00	500.00	2654	618	3,272
Install flow meters @ ea. Drift level	EA	1	16.00	2600.00	1327	3211	4,539
Install bypass systems @ ea. Drift level	LS	1	40.00	8000.00	3318	9881	13,199
Install hanger supports for pipe down shaft	EA	90	4.00	100.00	29862	11116	40,978
Install pipe support stand for pressure reducing station	LS	1	16.00	400.00	1327	494	1,821
Instrumentation alarm devices, reading of pressure, flow & leakage - Allov	LS	1	40.00	2000.00	3318	2470	5,788
Difficulty Factor (Allowance) (3% per 100 ft based on labor hrs. for sec.	LS	1	726.75		60284		60,284
Minus 2600 ft.							
Fab. & install 6 in. Sch. 40 Stainless Steel (S.S.) piping in Yates mine sha	LF	900	0.65	100.00	48526	111165	159,690
Install thermal expansion loops for piping system @ approx. 200 ft interva	EA	4	8.00	500.00	2654	2470	5,125
Fab. & install pipe loop extension into drift levels with isolation valves	EA	1	80.00	10000.00	6636	12352	18,988
Install pressure reducing valve assembly @ ea. drift level - Allowance	EA	1	160.00	70000.00	13272	86461	99,733
Install water hammer pressure suppression tank - Allowance	EA	1	32.00	2000.00	2654	2470	5,125
Install pressure relief valves @ ea. drift level	EA	1	32.00	500.00	2654	618	3,272
Install pressure monitoring transducers	EA	1	32.00	500.00	2654	618	3,272

ESTIMATE SHEET

ESTIMATE CLASS: Class 5 - ROM | **PFN:** TBD

PROJECT TITLE: DUSEL - Homestake Mine | **PROJECT & TASK:** 34227 - 72540

Purified Water Shaft Piping Fill System. Rev1 | **WORK ORDER:** TBD

FACILITY ID: Lead, South Dakota | **DATE:** 10-Mar-11

DETAILS: MECHANICAL

Requester	Estimator	Checker
Sally Marie Bahowick	John Draper	

Description	Unit	Qty	Unit Labor Hours	Unit Material Cost	Labor Cost	Material Cost	Total
Install flow meters @ ea. Drift level	EA	1	16.00	2600.00	1327	3211	4,539
Install bypass systems @ ea. Drift level	LS	1	40.00	8000.00	3318	9881	13,199
Install hanger supports for pipe down shaft	EA	90	4.00	100.00	29862	11116	40,978
Install pipe support stand for pressure reducing station	LS	1	16.00	400.00	1327	494	1,821
Instrumentation alarm devices, reading of pressure, flow & leakage - Allov	LS	1	40.00	2000.00	3318	2470	5,788
Difficulty Factor (Allowance) (3% per 100 ft based on labor hrs. for sec.	LS	1	1111.50		92199		92,199
Minus 3500 ft.							
Fab. & install 6 in. Sch. 40 Stainless Steel (S.S.) piping in Yates mine sha	LF	900	0.65	100.00	48526	111165	159,690
Install thermal expansion loops for piping system @ approx. 200 ft interva	EA	4	8.00	500.00	2654	2470	5,125
Fab. & install pipe loop extension into drift levels with isolation valves	EA	1	80.00	10000.00	6636	12352	18,988
Install pressure reducing valve assembly @ ea. drift level - Allowance	EA	1	160.00	70000.00	13272	86461	99,733
Install water hammer pressure suppression tank - Allowance	EA	1	32.00	2000.00	2654	2470	5,125
Install pressure relief valves @ ea. drift level	EA	1	32.00	500.00	2654	618	3,272
Install pressure monitoring transducers	EA	1	32.00	500.00	2654	618	3,272
Install flow meters @ ea. Drift level	EA	1	16.00	2600.00	1327	3211	4,539
Install bypass systems @ ea. Drift level	LS	1	40.00	8000.00	3318	9881	13,199
Install hanger supports for pipe down shaft	EA	90	4.00	100.00	29862	11116	40,978
Install pipe support stand for pressure reducing station	LS	1	16.00	400.00	1327	494	1,821
Instrumentation alarm devices, reading of pressure, flow & leakage - Allov	LS	1	40.00	2000.00	3318	2470	5,788
Difficulty Factor (Allowance) (3% per 100 ft based on labor hrs. for sec.	LS	1	1496.25		124114		124,114
Minus 4100 ft.							
Fab. & install 6 in. Sch. 40 Stainless Steel (S.S.) piping in Yates mine sha	LF	600	0.65	100.00	32351	74110	106,460
Install thermal expansion loops for piping system @ approx. 200 ft interva	EA	4	8.00	500.00	2654	2470	5,125
Fab. & install pipe loop extension into drift levels with isolation valves	EA	1	80.00	10000.00	6636	12352	18,988
Install pressure reducing valve assembly @ ea. drift level - Allowance	EA	1	160.00	70000.00	13272	86461	99,733
Install water hammer pressure suppression tank - Allowance	EA	1	32.00	2000.00	2654	2470	5,125
Install pressure relief valves @ ea. drift level	EA	1	32.00	500.00	2654	618	3,272
Install pressure monitoring transducers	EA	1	32.00	500.00	2654	618	3,272
Install flow meters @ ea. Drift level	EA	1	16.00	2600.00	1327	3211	4,539
Install bypass systems @ ea. Drift level	LS	1	40.00	8000.00	3318	9881	13,199
Install hanger supports for pipe down shaft	EA	60	4.00	100.00	19908	7411	27,319
Install pipe support stand for pressure reducing station	LS	1	16.00	400.00	1327	494	1,821
Instrumentation alarm devices, reading of pressure, flow & leakage - Allov	LS	1	40.00	2000.00	3318	2470	5,788
Difficulty Factor (Allowance) (3% per 100 ft based on labor hrs. for sec.	LS	1	1365.30		113252		113,252
Minus 4850 ft.							
Fab. & install 6 in. Sch. 40 Stainless Steel (S.S.) piping in Yates mine sha	LF	800	0.65	100.00	43134	98813	141,947
Install thermal expansion loops for piping system @ approx. 200 ft interva	EA	4	8.00	500.00	2654	2470	5,125
Fab. & install pipe loop extension into drift levels with isolation valves	EA	1	80.00	10000.00	6636	12352	18,988
Install pressure reducing valve assembly @ ea. drift level - Allowance	EA	1	160.00	70000.00	13272	86461	99,733
Install water hammer pressure suppression tank - Allowance	EA	1	32.00	2000.00	2654	2470	5,125
Install pressure relief valves @ ea. drift level	EA	1	32.00	500.00	2654	618	3,272

ESTIMATE SHEET

ESTIMATE CLASS: Class 5 - ROM | **PFN:** TBD

PROJECT TITLE: DUSEL - Homestake Mine | **PROJECT & TASK:** 34227 - 72540

Purified Water Shaft Piping Fill System. Rev1 | **WORK ORDER:** TBD

FACILITY ID: Lead, South Dakota | **DATE:** 10-Mar-11

DETAILS: MECHANICAL

Requester	Estimator	Checker
Sally Marie Bahowick	John Draper	

Description	Unit	Qty	Unit Labor Hours	Unit Material Cost	Labor Cost	Material Cost	Total
Install pressure monitoring transducers	EA	1	32.00	500.00	2654	618	3,272
Install flow meters @ ea. Drift level	EA	1	16.00	2600.00	1327	3211	4,539
Install bypass systems @ ea. Drift level	LS	1	40.00	8000.00	3318	9881	13,199
Install hanger supports for pipe down shaft	EA	80	4.00	100.00	26544	9881	36,425
Install pipe support stand for pressure reducing station	LS	1	16.00	400.00	1327	494	1,821
Instrumentation alarm devices, reading of pressure, flow & leakage - Allov	LS	1	40.00	2000.00	3318	2470	5,788
Difficulty Factor (Allowance) (3% per 100 ft based on labor hrs. for sec.	LS	1	1920.60		159314		159,314
Job Site Delivery: No off load - Allowance	LS	1		30000.00		37055	37,055
Construction / Design Completion Factor	LS	1		269391.12		332742	332,742
Subtotal:							3,026,653
Cleaning & passivating of 6 in. sch. 40 Stainless Steel pipe - Allow.	LF	5,800		18.50		132533	132,533
(Note: 5,800 L.F. of pipe takes into account drop amt. plus drift Allow.)							
Job Site Delivery: No off load - Allowance	LS	1		30000.00		37055	37,055
Construction / Design Completion Factor	LS	1		16958.80		20947	20,947
Subtotal:							190,535

130.04.06.04 Water Shaft System

WBS LEVEL 5	ACTIVITY ID	ACTIVITY DESCRIPTION	START DATE	FINISH DATE	DURATION	RESOURCE	HOURS	COST	TOTAL with Escalation
130.04.06.04 Water Shaft Syster	WS1870	Interface Documents	3/2/2011	6/1/2011	65	BNL M&S CE from DK: Mechanical Engineer	34	2,340	2,403
		Interface Documents Total					34	2,340	2,403
	WS1880	Integration Plan and Conventional Facil	6/2/2011	11/23/2011	120	BNL M&S CE from DK: Mechanical Engineer	175	12,130	12,475
		Integration Plan and Conventional Facilities Total					175	12,130	12,475
	WS1890	Prepare for CD-1 Review	11/28/2011	1/25/2012	40	BNL M&S CE from DK: Mechanical Engineer	17	1,191	1,229
		Prepare for CD-1 Review Total					17	1,191	1,229
	WS1900	CD-1 Review	3/30/2012	4/3/2012	3	BNL M&S CE from DK: Mechanical Engineer	7	484	499
		CD-1 Review Total					7	484	499
	WS1920	Ross/Yates Shaft Renovations	10/4/2011	10/8/2015	1000	BNL M&S CE from DK: Mechanical Engineer	140	9,693	10,250
		Ross/Yates Shaft Renovations Total					140	9,693	10,250
	WS1930	Shaft piping design	4/4/2012	6/14/2013	300	BNL M&S CE from DK: Mechanical Engineer	399	27,624	28,594
						BNL M&S CE from DK: Travel		4,500	4,694
		Shaft piping design Total					399	32,124	33,289
	WS1940	Design Package review	6/17/2013	6/21/2013	5	BNL M&S CE from DK: Mechanical Engineer	68	4,708	4,883
		Design Package review Total					68	4,708	4,883
	WS1950	Design package ready to combine with	6/24/2013	8/6/2013	30	BNL M&S CE from DK: Mechanical Engineer	7	478	496
		Design package ready to combine with shaft piping Total					7	478	496
	WS1960	Procurement of Shaft piping material	8/7/2013	1/31/2014	120	BNL M&S CE from DK: Mechanical Engineer	350	24,259	25,623
		Procurement of Shaft piping material Total					350	24,259	25,623
	WS1970	Water Shaft System Delivery	2/3/2014	6/10/2014	90	BNL M&S CE from DK: Mechanical Engineer	34	2,368	2,522
		Water Shaft System Delivery Total					34	2,368	2,522
	WS1980	Water Shaft System Installation	6/11/2014	4/1/2015	200	BNL M&S CE from DK: Mechanical Engineer	306	21,185	22,941
						BNL M&S CE from DK: Travel		4,500	4,955
		Water Shaft System Installation Total					306	25,685	27,895
	WS1990	Water Shaft System Testing	4/2/2015	6/4/2015	45	BNL M&S CE from DK: Mechanical Engineer	68	4,704	5,147
		Water Shaft System Testing Total					68	4,704	5,147
130.04.06.04 Water Shaft System Total							**1,606**	**120,163**	**126,712**
Grand Total							**1,606**	**120,163**	**126,712**

	LBNE Water Cherenkov Detector **BASIS of ESTIMATE FORM (BoE)**	**Date of Estimate: 25-July-2011** **Revision #: -** **Prepared By: Jack Fowler** **Approved By:** **Level 2 Manager**

WBS Number: **130.04.06.05**	**WBS Title:** **Sump System**

WBS Dictionary:

This WBS Element covers the requirements specification, engineering development, and fabrication of the water sump system. The sump resides near the base of each tank to collect leakage, overflow, and ground water. This WBS element includes the piping from the collection system at the bottom of the tank, the drain pipe and valve, the sump pump(s) and modifications to the cavern where the sump is situated. The piping from the sump to the waste system sump is included in this WBS element.

Cost Type **(check all that apply):** _*_ EDIA Material _*_ EDIA Labor _*_ MFG Material _*_ MFG Labor	**Costing Method** **(check all that apply):** _*_ Engineering Judgment _*_Physicist Estimate ___ Level of Effort _*_ Vendor Quote (attached) ___ Catalog Price (specify) ___ Prior purchase _*_ Prior experience ___ Parametric Estimate ___ Other- Description:_____

Attach Relevant Documents (including but not limited to):

M&S Contingency (%)**: 19%**	**Labor Contingency** (%)**: 22%**

Basis of Estimate

Details of Estimate:

In this estimate, we include part of the tasks related to the design, procurement, and delivery of the sump and drain system. Also included are the engineering costs to integrate the design with the conventional facilities at Homestake. Specifically, this will be detailed interface documents and drawings, material specifications, QC requirements, infrastructure required, and environmental considerations. A breakdown of the costs is listed below.

Installation of piping and pump through borehole	$35,280.00
Sump pump, power cable, and transducer	$17,100.00
4" Stainless steel piping and wellhead	$27,500.00
Fill, recirculate, and drain pump (FRED)	$38,500.00
TOTAL	$118,380.00

Labor Details

Table 1 provides detail of the labor hours by job function from Preliminary Design (FY11) through installation (FY22) for the Sump and Drain System WBS of the Water System.

Assumptions/Interfaces:
This estimate assumes that a minimum 25 m^3 sump at 5117L, a 50 cm diameter bore hole between the 5117L sump and drift 636, electrical service in drift 636, and a drain sump to the Ross dewatering system will be provided by conventional facilities. This also assumes that the leak rate of the vessel is approximately 10 m^3 per day, and the native waters collected outside the liner will be less than 2 m^3 per day. For the FRED pumps, it is assumed that the water containment group will provide the casing pipes inside the vessel to lower the pumps into. Also, it will be possible to lower the FRED pump head approximately 3 m below the floor of the cavity into a contained sump.

Material Costs

		Unit	Qty	Unit material cost	Material cost incl. taxes and constr. overhead
Pump and power cable	150 gpm 400 ft TDH SST Grundfos SST Submersible 150S200_11	EA	1	10000	12,200
Transducer	ROM for 200 ft cable PID loop	EA	1	4000	4,900
4 in SST pipe in borehole	Extracted MK estimate for 4 in CS direct cost piping in shaft, then scaled up to SST cost using 4 in pipe quote	LF	230	80	22,500
Wellhead	Allowance				5,000
Recirc/Drain pump	Del Allspach estimate				38,500
Total Materials					**$83,100**

Labor Costs

		Unit	Qty	Unit Labor hours	Labor Cost incl. constr overhead
Install borehole piping	Supplied wage rate using 1 ft/hr rate to install 230 ft in borehole	LF	230	230	16,600
Install sump pump	Used MK estimate	EA	1	80	5,800
Wellhead labor	Allowance	HR	1	40	2,880
Recirc/Drain pump labor	Estimate				10,000
Total Labor					**$35,280**
Total Materials and Labor					**$118,380**

130.04.06.05 Sump System

WBS LEVEL 5	ACTIVITY ID	ACTIVITY DESCRIPTION	START DATE	FINISH DATE	DURATION	RESOURCE	HOURS	COST	TOTAL with Escalation
130.04.06.05 Sump System	WS2010	Water Sump System - Conceptual desig	8/15/2011	12/5/2011	76	BNL M&S CE from DK: Mechanical Engineer	136	9,424	9,704
		Water Sump System - Conceptual design Total					136	9,424	9,704
	WS2020	Water Sump System - Preliminary Desig	12/5/2011	9/20/2012	200	BNL M&S CE from DK: Mechanical Engineer	708	49,017	50,590
						BNL M&S CE from DK: Travel		6,000	6,162
		Water Sump System - Preliminary Design Total					708	55,017	56,752
	WS2030	Water Sump System - Final design	4/3/2014	6/16/2014	51	BNL M&S CE from DK: Mechanical Engineer	280	19,384	20,650
						BNL M&S CE from DK: Travel		6,000	6,499
		Water Sump System - Final design Total					280	25,385	27,150
	WS2050	Water Sump System - Procurement anc	6/17/2014	7/8/2014	13	BNL M&S CE from DK: Mechanical Engineer	68	4,707	5,015
		Water Sump System - Procurement and contracts Total					68	4,707	5,015
	WS2060	Water Sump System - Fabrication	6/23/2015	12/29/2015	126	BNL M&S CE from DK: Mechanical Engineer	204	14,092	15,606
		Water Sump System - Fabrication Total					204	14,092	15,606
	WS2080	Ready for Sump System Installation	2/21/2018	7/10/2019	360	BNL M&S CE from DK: Mechanical Engineer	709	49,100	59,066
						BNL M&S CE from DK: Travel		9,000	11,007
		Ready for Sump System Installation Total					709	58,100	70,073
	WS2090	Sump System Testing	7/10/2019	9/11/2019	45	BNL M&S CE from DK: Mechanical Engineer	408	28,257	34,391
		Sump System Testing Total					408	28,257	34,391
130.04.06.05 Sump System Total							**2,513**	**194,981**	**218,691**
Grand Total							**2,513**	**194,981**	**218,691**

	LBNE Water Cherenkov Detector **BASIS of ESTIMATE FORM (BoE)**	**Date of Estimate: July 20, 2011** **Revision #: 1st** **Prepared By:** **Minfang Yeh and Sunej Hans** **Brookhaven National Lab** **Approved By:** **Level 2 Manager**

WBS Number:	**WBS Title:**
130.04.06.07	**Material Compatibility Testing**

WBS Dictionary:

Accelerated aging testing in short period of time for the different parts of the detector. It involves the cleaning of the samples, testing at different temperatures and analysis of the material and liquid from the leaching behaviors. Study of Q10 coefficient, and building up the database which would help other collaborators to choose suitable material in the future use.

Cost Type **(check all that apply):**	**Costing Method** **(check all that apply):**
_√__ EDIA Material _√__ EDIA Labor _√__ MFG Material ___ MFG Labor	___ Engineering Judgment _√__Physicist Estimate ___ Level of Effort _√__ Vendor Quote (attached) _√__ Catalog Price (specify) _√__ Prior purchase _√__ Prior experience ___ Parametric Estimate ___ Other- Description:_____

Attach Relevant Documents (including but not limited to):
Quotes: UV-Vis, Pyrex glass bottles, septa silicone, ovens, cell holders, weighing balance, omega water filter replacement, GC/MS columns, IR microscope and LC/MS

M&S Contingency (%)**: 10%**	**Labor Contingency** (%)**: 15%**

Basis of Estimate

Details of Estimate:
Write a short paragraph to describe the work involved in this WBS - this will appear in the cost book. Table or list of items is not formatted well in this field in the db therefore it should be a paragraph.

A material compatibility program to guide the material selection of LBNE detector construction and operation by applying material aging tests to study (1) material impact on water and (2) water impact on material, and to establish QA/QC program for material procurement from selected vendor during the construction phase.

Impact subsystems: mainly detector (liner, pipe, pumps, etc), PMT, calibration (any in contact with water)

Program Scopes:

- BNL has extensive experience and is the leading institute for several past/ongoing experiments, i.e., SNO, LENS, Daya Bay, and SNO+.
- UCI has 8m-pathlength attenuation systems; capable of measuring light transmission at enhanced signal (>80m).
- LBNE detector ($T_{1/2}$=10 years), an estimate of 2.5-yr at 40C, at >100 samples per month to completely testing and documentation, is required.
- Simulation model simulation (using computation chemistry) incorporated with on-line purification schemes (600-GPM) and pre-cleaning procedures.
- Q_{10} studies at different temperatures (20-60C) to understand the leaching kinetics.
- Materials on critical-path, ex. liner, piping, stainless steel, and shotcrete, are under testing and will be continued to reach testing time.
- Leaching identification for material QA/QC from the selected vendors.
- Stress test and Surface microscopic measurement for material after merging in water
- Gd-option remains open

Equipments of needs:

- 18-M Water-purification system (in-house)
- Aging chambers and baths (70% in-house)
- Pre-cleaning (Ultrasonic) or chemical pickling system (80% in-house)
- 10-cm UV optical by UV-Vis spectrometer (in-house)
- Material imaging to the impact of the liquid, and degradation of the material by Infrared-Ray microscope (quotation)
- Leaching material analysis by organic by IR (in-house), GC-MS (in-house), LC-MS (quotation); and inorganic by XRF (in-house), and ICP-MS (quotation)

Require expertise in material and chemical instrumentation and experience in material compatibility tests

- Scientist (L4 manager) for project management, data assessment, kinetic model simulation incorporated with purification scheme and interface with other sub-systems.
- Postdoc to work with scientist to establish the testing procedures, build the database, and develop the simulation model.

- Technician to carry out the procedures, prepare the samples, and perform data analysis.

Labor Details

4-hrs (sample cleaning and testing-setup at day-1) + 2hr×4 (weekly measurement for first month) +2hr×11 (monthly measurement for 11 months) + 10 hrs (data analysis)
Total = 44-hrs per sample per temperature per year

CD-1 Conceptual Design:

BNL: Compatibility program operation and management

0.5-FTE scientist per year
- Project management (organize, report, and interface)
- data assessment and model interpretation
- Method development and Experimental Supervision

1-FTE Postdoc per year
- Pre-cleaning of the samples according to their properties and chamber solutions
- Experimental setups and assistance on method developments
- Supervise the technician
- Collect the database for UV spectra, conductivity, and pH of water, and physical properties of tested materials

0.25-FTE technician (per year)
- Daily experimental preparation and operation
- Sample collection and transportation

UCI: 8-m Pathlength system to Cross-Check in-lab data

0.2-FTE scientist
- Supervise the experimental setup and operation
- Interpretation of data

0.5-FTE Postdoc
- Experimental operation and preparation
- Sample collection and transportation

CD-2: Pre-qualification

0.5-FTE scientist per year
- Project management (organize, report, and interface)
- data assessment and model interpretation
- Method development and Experimental Supervision

1-FTE technician per year

- Pre-cleaning of the samples
- Daily experimental preparation and operation
- Sample collection and transportation
- Collect the database for UV spectra, conductivity, and pH of water, and physical properties of tested materials

CD-3 and Post CD-3: Qualification

- Final list of material samples
- QA/QC of procured materials from selected vendors
- Other sub-systems, ex, calibration and filling.

0.1-FTE Scientist per year

- project management and data assessment

0.5-FTE technician per year

- Daily experimental preparation and operation
- Sample collection and transportation

Material Details
It is suggested that information from the CDR along with figures is added here.

High Value material costs are as follows:
FY11 = $65K
FY12 = $130K
FY13 = $45K
FY14 = $30K
FY15 = $30K

High value cost:

IR-microscope = $61,681.61

LC/MS = $134,080.96

Low value material costs are as follows:
FY11 = $30K
FY12 = $30K
FY13 = $25K
FY14 = $25K
FY15 = $25K
Low value cost:

It is also required to buy the lab accessories and chemicals

UV-Vis = $5000

(In past three years we have replaced UV-Vis)

Pyrex glass bottles (200) = $3503.80

Septa silicone = $735.6

Ovens = 7 × ($3237) = (discounted price) $17,674.02

Cell Holders = $277.63

Weighing Balance = $1780.20

Maintenance:
It includes the repair for the UV-VIS, change of the filtration system, change of the GC/MS columns, XRF maintenance and replacement or maintenance of the thermal chambers.

FY11	=	$24K
FY12	=	$24K
FY13	=	$24K
FY14	=	$24K
FY15	=	$24K

Travel:
It is required to visit the vendors for some specification purposes.

FY11	=	$7K
FY12	=	$7K
FY13	=	$5K
FY14	=	$5K
FY15	=	$5K

Space:
The space is needed to place the thermal chambers (7), to set up the samples, and to place the required equipment. There is 20K charge per room at this moment and it's kept inclining.

FY11	=	$26K
FY12	=	$26K
FY13	=	$26K
FY14	=	$26K
FY15	=	$26K

Contingency & Method

Assumptions/Interfaces

CD-1:

- assume BNL-chem. will provide 0.35-FTE
- assume most-required, in-house instruments from chemistry department can be used for LBNE test
- assume other non-in-house instruments to be provided
- to complete the R&D for aging method development, simulation model development, Q10 measurement, and leaching material identifications
- to start material-testing for items on critical-path.
- to interface with water-system, detector system, civil-construction system and PMT system
- cost based on physicist-estimate (past experience), vendor quotation and catalog price

CD-2:

- assume BNL-chem. will provide 0.35-FTE
- to provide a pre-qualification material list for items on critical-path
- to interface with water-system, detector system, civil-construction system and PMT system
- cost based on physicist-estimate (past experience), vendor quotation and catalog price

CD-3 and Post CD-3:

- to establish QA/QC for procured materials from selected vendors
- to complete material database and documentation
- to interface with water-filling-system, detector system, and calibration system
- cost (labor) based on physicist-estimate

Constraints

- **Not enough labor funding to support the L4 manager for project management**
- Need few non-in-house instruments to complete the task (BNL-chem will provide 80% of required equipments)
- Need labor supports to operate the test

Comments

- A complete material program for LBNE to be built is necessary for the success of experiment to (1) ensure safe detector operation (2) avoid schedule delay, and (3) achieve potential cost-saving

130.04.06.07 Material Compatibility Testing

WBS LEVEL 5	ACTIVITY ID	ACTIVITY DESCRIPTION	START DATE	FINISH DATE	DURATION	RESOURCE	HOURS	COST	TOTAL with Escalation
130.04.06.07.01 Materials Testi	WS2130	Materials Testing Scope Definition	1/11/2010	2/8/2010	20	Post Doc R2	60	2,426	3,956
		Materials Testing Scope Definition Total					60	2,426	3,956
	WS2140	Literature Search	2/9/2010	5/4/2010	60	Post Doc R2	50	2,013	3,284
		Literature Search Total					50	2,013	3,284
	WS2150	Compilation of Results	5/5/2010	6/2/2010	20	Post Doc R2	50	2,021	3,297
		Compilation of Results Total					50	2,021	3,297
	WS2160	Establish procedures for pre-cleaning a	6/3/2010	8/26/2010	60	Post Doc R2	100	4,051	6,607
		Establish procedures for pre-cleaning and aging Total					100	4,051	6,607
	WS2165	Chemical Analysis & Small Scale Testing	1/11/2010	1/9/2014	998	BNL M&S CS Travel		35,858	56,234
						Mechanical Technician T2	3,104	181,199	282,066
						Post Doc R2	2,782	112,457	175,075
						Project Manager S4	499	59,778	93,055
		Chemical Analysis & Small Scale Testing Engineerin Total					6,384	389,292	606,429
	WS2170	Chemical Analysis & Small Scale Testing	1/11/2010	1/8/2014	997	BNL M&S CS Laboratory Equipment		299,000	333,093
						BNL M&S CS Maintenance Contract		144,356	226,370
						BNL M&S CS PO Purchases		126,898	152,171
		Chemical Analysis & Small Scale Testing Total						570,254	711,634
	WS2180	Develop list of pre-qualified materials c	12/12/2011	3/7/2012	59	Mechanical Technician T2	160	9,334	15,713
		Develop list of pre-qualified materials compatible Total					160	9,334	15,713
	WS2200	Develop Kinetics Modeling	8/27/2010	11/22/2010	60	Mechanical Technician T2	160	9,352	15,494
		Develop Kinetics Modeling Total					160	9,352	15,494
	WS2220	Absolute Attenuation - Gd Option [UCI]	1/11/2010	1/13/2014	1000	BNL M&S CE from IR: Post Doc	1,800	62,162	63,930
						BNL M&S CE from IR: Uncosted Physicist/Scientist	450		
		Absolute Attenuation - Gd Option [UCI] Total					2,250	62,162	63,930
130.04.06.07.01 Materials Testing Scope Definition Total							**9,215**	**1,050,906**	**1,430,345**
130.04.06.07.02 Literatrure Sear	WS2240	In lab aging tests	6/1/2012	5/27/2014	494	BNL M&S CS PO Purchases		9,998	12,380
						Mechanical Technician T2	998	58,256	81,498
						Post Doc R2	400	16,177	22,631
		In lab aging tests Total					1,398	84,431	116,509
	WS2340	Test and down select pre-qualified mat	6/1/2012	2/7/2013	170	Mechanical Technician T2	600	35,034	49,418

130.04.06.07.02 Literatrure Sear	WS2340	Test and down select pre-qualified materials for t Total					600	35,034	49,418
	WS2350	Testing materials for other systems: cal	6/1/2012	5/27/2014	494	BNL M&S CS PO Purchases		30,001	37,150
						Uncosted Post Doc	998		
		Testing materials for other systems: cables, pipes Total					998	30,001	37,150
130.04.06.07.02 Literatrure Search Total							**2,996**	**149,466**	**203,077**
130.04.06.07.03 Compilation/Di	WS2380	Selection of liner material	5/1/2014	6/11/2014	29	Sr. Scientist S3	100	9,862	13,920
		Selection of liner material Total					100	9,862	13,920
	WS2390	Final tests of liner materials	5/6/2013	4/30/2014	246	BNL M&S CS PO Purchases		14,999	18,782
						Mechanical Technician T2	300	17,521	24,459
						Post Doc R2	600	24,267	33,876
		Final tests of liner materials Total					900	56,787	77,118
	WS2400	Prepare for CD-3 review	6/12/2014	7/23/2014	28	Sr. Scientist S3	100	9,853	13,908
		Prepare for CD-3 review Total					100	9,853	13,908
130.04.06.07.03 Compilation/Distillation of Results Total							**1,100**	**76,501**	**104,945**
130.04.06.07.04 Materials Testir	WS2410	In lab aging tests	10/17/2014	6/10/2022	1978	BNL M&S CS Maintenance Contract		80,001	148,592
						BNL M&S CS PO Purchases		100,008	142,638
						Mechanical Technician T2	2,294	133,952	212,996
		In lab aging tests Total					2,294	313,960	504,226
	WS2420	Data Analysis	7/24/2014	2/21/2022	1959	BNL M&S CS Maintenance Contract		100,007	185,169
						Post Doc R2	999	40,392	63,759
		Data Analysis Total					999	140,399	248,927
	WS2430	QA/QC of selected vendors	10/17/2014	2/22/2022	1900	BNL M&S CS Travel		39,993	74,286
						Post Doc R2	1,007	40,711	64,473
						Sr. Scientist S3	1,995	196,644	311,417
		QA/QC of selected vendors Total					3,002	277,349	450,176
	WS2440	Final compilation of the materials datab	10/17/2014	2/2/2017	582	Post Doc R2	1,199	48,470	71,681
		Final compilation of the materials database Total					1,199	48,470	71,681
130.04.06.07.04 Materials Testing/Study Total							**7,494**	**780,178**	**1,275,009**
Grand Total							**20,805**	**2,057,051**	**3,013,377**

PRICE QUOTATION

Government Scientific Source, Inc.

Veteran Owned Small Business
12351 Sunrise Valley Drive, Reston, Virginia 20191
*(800) 248-8030 * (703) 734-1805*
Fax (703) 734-1803

Sales Quote Date: 04/08/11
Sales Quote Number: Q173438

SalesPerson: NICK WILLIAMS
Customer ID: BROOKHAVEN
E-Mail: nwilliams@govsci.com

Requested For Shipment To:

BROOKHAVEN NATIONAL LABORATORY
ROCHESTER AVENUE
RECEIVING SECTION BLDG 98
UPTON, NY 11973
United States

Requested By:

Name: MINFANG YEH
Phone: 631-344-2870
Fax: 631-344-5815
E-Mail: yeh@bnl.gov

Notes and Comments:

Part No.		Description	UOM	Qty	List Price	Sales Price	Ext Price
PERKIN ELME	MZ109170	FLEXAR SQ 300 MS VALVE AND SYRINGE PUMP **(Available on FSS Contract No. GS-07F-5934R, Sin # 615-9)**	Each	1	119,400.00	**81,192.00**	**81,192.00**
PERKIN ELME	NFLR0200	FLEXAR BINARY LC PUMP PLATFORM **(Available on FSS Contract No. GS-07F-5934R, Sin # 615-9)**	Each	1	10,600.00	**7,208.00**	**7,208.00**
PERKIN ELME	N2920014	FLEXAR UV/VIS DETECTOR **(Available on FSS Contract No. GS-07F-5934R, Sin # 632-6)**	Each	1	6,500.00	**4,420.00**	**4,420.00**
PERKIN ELME	N2930660	AUTOSAMPLER-FLEXAR LC **(Available on FSS Contract No. GS-07F-5934R, Sin # 615-9)**	Each	1	12,200.00	**8,296.00**	**8,296.00**
PERKIN ELME	N2601681	OVEN-FLEXAR LC COLUMN PELTIER **(Available on FSS Contract No. GS-07F-5934R, Sin # 615-9)**	Each	1	3,087.00	**2,099.16**	**2,099.16**
PERKIN ELME	09402019	CONVERTER-USB/8 PORT RS232/NT **(Open Market)**	Each	1	866.00	**866.00**	**866.00**
PERKIN ELME	N930-4076	BROWNLEE SUPRA UHPLC C18, 100 X 3.0 mm 1.9um **(Open Market)**	Each	1	634.00	**507.20**	**507.20**
PERKIN ELME	N9301208	FILTER- HI CAP HYDROCARBON TRAP **(Open Market)**	Each	1	274.00	**219.20**	**219.20**

Continued on page 2..... **104,807.56**

PRICE QUOTATION

Government Scientific Source, Inc.

Veteran Owned Small Business

12351 Sunrise Valley Drive, Reston, Virginia 20191

*(800) 248-8030 * (703) 734-1805*

Fax (703) 734-1803

Sales Quote Date: 04/08/11
Sales Quote Number: Q173438

SalesPerson: NICK WILLIAMS
Customer ID: BROOKHAVEN
E-Mail: nwilliams@govsci.com

Requested For Shipment To:

BROOKHAVEN NATIONAL LABORATORY
ROCHESTER AVENUE
RECEIVING SECTION BLDG 98
UPTON, NY 11973
United States

Requested By:

Name: MINFANG YEH
Phone: 631-344-2870
Fax: 631-344-5815
E-Mail: yeh@bnl.gov

Notes and Comments:

Part No.		Description	UOM	Qty	List Price	Sales Price	Ext Price
	Continued from page 1						104,807.56
PERKIN ELME	MZ301198	CALIBRATION MIX- LC/MS ESI (+) ION MIX **(Open Market)**	Each	1	134.00	**134.00**	**134.00**
PERKIN ELME	MZ301199	CALIBRATION MIX- LC/MS ESI (-) ION MIX **(Open Market)**	Each	1	134.00	**134.00**	**134.00**
PERKIN ELME	N020-7361	INSTALLATION LC SYS PLUS TCWS **(Open Market)**	Each	1	1,500.00	**1,500.00**	**1,500.00**
PERKIN ELME	N020-0549	FLEXAR SQ 300 MS SERV. INSTALL **(Open Market)**	Each	1	3,360.00	**3,360.00**	**3,360.00**
		OPTIONAL ITEMS :					
PERKIN ELME	N930-3223	N2 GENERATOR 30L/min >98% **(Open Market)**	Each		17,100.00		
	Continued on page 3						**109,935.56**

PRICE QUOTATION

Government Scientific Source, Inc.

Veteran Owned Small Business
12351 Sunrise Valley Drive, Reston, Virginia 20191
*(800) 248-8030 * (703) 734-1805*
Fax (703) 734-1803

Sales Quote Date: 04/08/11
Sales Quote Number: Q173438

SalesPerson: NICK WILLIAMS
Customer ID: BROOKHAVEN
E-Mail: nwilliams@govsci.com

Requested For Shipment To:

BROOKHAVEN NATIONAL LABORATORY
ROCHESTER AVENUE
RECEIVING SECTION BLDG 98
UPTON, NY 11973
United States

Requested By:

Name: MINFANG YEH
Phone: 631-344-2870
Fax: 631-344-5815
E-Mail: yeh@bnl.gov

Notes and Comments:

Part No.		Description	UOM	Qty	List Price	Sales Price	Ext Price
		Continued from page 2.....					109,935.56
PERKIN ELME	09406020	MONITOR 24 INCH LCD NON ATO **(Open Market)**	Each		891.00		
PERKIN ELME	09404922	NETWORK CARD **(Open Market)**	Each		72.00		

FOB Destination
Quotation valid for 30 days from date of issuance.
Estimated delivery time from date of issuance is 60 to 90 Days

Subtotal:	**109,935.56**
Sales Tax:	**0.00**
Total:	**109,935.56**

LBNE	**LBNE Water Cherenkov Detector** **BASIS of ESTIMATE FORM (BoE)**	**Date of Estimate: 26-July-2011** **Revision #: -** **Prepared By: Jack Fowler** **Approved By:** **Level 2 Manager**

WBS Number:	**WBS Title:**
130.04.06.08	**Water System Installation**

WBS Dictionary:

This WBS Element covers the planning and execution of the installation and commissioning of the water systems at the LBNE far site. All contractor SOW, work plans and permits, installation plans/schedules, and PPE will be in place at the conclusion of the planning stage. Execution of the installation of the water systems, including surface fill, underground recirculate, and water sump systems. This will be concluded with the commissioning, that includes functional system testing and certification.

Cost Type **(check all that apply):**	**Costing Method** **(check all that apply):**
___ EDIA Material _*_ EDIA Labor _*_ MFG Material _*_ MFG Labor	_*_ Engineering Judgment _*_Physicist Estimate ___ Level of Effort ___ Vendor Quote (attached) ___ Catalog Price (specify) ___ Prior purchase _*_ Prior experience ___ Parametric Estimate ___ Other- Description:_____

Attach Relevant Documents (including but not limited to):

M&S Contingency (%)**: 10%**	**Labor Contingency** (%)**: 20%**

Basis of Estimate
Details of Estimate: This estimate includes the costs of oversight for the installation and commissioning of the water systems at the LBNE far site. Costs include labor to oversee: the preparation of the sites; transport of the equipment; installation of the equipment; initial startup; and initial operation tests. Labor and travel costs to the site for scientists, engineers, and technicians are included. This estimate only includes costs for the initial commissioning of the equipment. Labor and travel for the initial detector fill are not included. Labor Details Table 1 provides detail of the labor hours by job function from Preliminary Design (FY11) through installation (FY22) for installation of the Water System. Assumptions/Interfaces: This estimate assumes that the equipment will be delivered to the installation storage facility near the installation site. It will be stored by LBNE until installation begins. LBNE will transport the equipment to the installation sites above and underground. The installation sites, both above and underground, will be prepared as required by conventional facilities with all MEP infrastructures provided. The supplier will be responsible for the placement, mounting, connecting of MEP services within 10 feet of the equipment, start up, and testing of the systems. LBNE will monitor the preparation of the installation sites, movement, installation, and commissioning of the equipment.

Assumptions/Interfaces

Constraints

Comments

130.04.06.08 Water System Installation

WBS LEVEL 5	ACTIVITY ID	ACTIVITY DESCRIPTION	START DATE	FINISH DATE	DURATION	RESOURCE	HOURS	COST	TOTAL with Escalation
130.04.06.08 Water System Inst	WS2250	Prepare CF Design for water system sur	3/13/2018	7/29/2019	360	BNL M&S CE from DK: Mechanical Engineer	601	41,623	50,126
						BNL M&S CE from IR: Post Doc	202	6,962	8,384
						BNL M&S CE from IR: Uncosted Physicist/Scientist	202		
						BNL M&S CE from DK: Travel		6,001	7,348
						BNL M&S CE from IR: Travel		6,001	7,348
		Prepare CF Design for water system surface Total					1,004	60,587	73,207
	WS2260	Prepare CF Design for water system UG	3/13/2018	7/29/2019	360	BNL M&S CE from DK: Mechanical Engineer	601	41,623	50,126
						BNL M&S CE from IR: Post Doc	202	6,962	8,384
						BNL M&S CE from IR: Uncosted Physicist/Scientist	202		
						BNL M&S CE from DK: Travel		6,001	7,348
						BNL M&S CE from IR: Travel		6,001	7,348
		Prepare CF Design for water system UG Total					1,004	60,587	73,207
	WS2280	Fill System delivery	12/4/2019	1/21/2020	35	BNL M&S CE from DK: Mechanical Engineer	68	4,701	5,876
						BNL M&S CE from DK: Travel		1,500	1,906
		Fill System delivery Total					68	6,201	7,782
	WS2290	Fill System Installation	1/22/2020	3/17/2020	40	BNL M&S CE from DK: Mechanical Engineer	204	14,123	17,654
						BNL M&S CE from IR: Post Doc	204	7,045	8,806
						BNL M&S CE from DK: Travel		3,000	3,812
						BNL M&S CE from IR: Travel		4,500	5,719
		Fill System Installation Total					408	28,669	35,992
	WS2300	Fill System Testing	3/18/2020	4/28/2020	30	BNL M&S CE from DK: Mechanical Engineer	136	9,409	11,761
						BNL M&S CE from IR: Post Doc	290	10,018	12,523
						BNL M&S CE from DK: Travel		3,000	3,812
						BNL M&S CE from IR: Travel		6,000	7,625
		Fill System Testing Total					426	28,427	35,721
	WS2310	Recirculation System delivery	4/29/2020	6/16/2020	35	BNL M&S CE from DK: Mechanical Engineer	68	4,701	5,876
						BNL M&S CE from DK: Travel		1,500	1,906
		Recirculation System delivery Total					68	6,201	7,782
	WS2320	Recirculation System Installation	6/17/2020	8/11/2020	40	BNL M&S CE from DK: Mechanical Engineer	204	14,123	17,654
						BNL M&S CE from IR: Post Doc	612	21,135	26,419
						BNL M&S CE from DK: Travel		3,000	3,812
						BNL M&S CE from IR: Travel		4,500	5,719
		Recirculation System Installation Total					816	42,759	53,604
	WS2330	Recirculation System Testing	8/12/2020	9/29/2020	35	BNL M&S CE from DK: Mechanical Engineer	272	18,828	23,535
						BNL M&S CE from IR: Post Doc	612	21,140	26,425
						BNL M&S CE from IR: Uncosted Physicist/Scientist	136		
						BNL M&S CE from DK: Travel		3,000	3,812
						BNL M&S CE from IR: Travel		6,000	7,625

130.04.06.08 Water System Inst	WS2330	Recirculation System Testing	8/12/2020	9/29/2020			
		Recirculation System Testing Total			1,020	48,968	61,397
130.04.06.08 Water System Installation Total					**4,815**	**282,399**	**348,692**
Grand Total					**4,815**	**282,399**	**348,692**

LBNE	**LBNE Water Cherenkov Detector** **BASIS of ESTIMATE FORM (BoE)**	**Date of Estimate: 1-Sept-2011** **Revision #: 1** **Prepared by: Brett Viren**

WBS number: 130.04.07.01	**WBS Title: Computing Management**	

Scope of Work Summary: This element includes the general management of the computing system and all activities related to the management and administration to ensure that construction activities meet the project goals and that work is done in accordance with DOE Cost, Schedule and Technical Guidelines.

Cost Type (check all that apply):	**Costing Method:**
_x_ EDIA M&S _x_ EDIA Labor _ MFG M&S _ MFG Labor	___ Engineering Estimate ___ Physicist Estimate _x_ Level of Effort ___ Vendor Quote (attached) ___ Catalog Price (specify) ___ Prior purchase or experience ___ Parametric Estimate ___ Other- Description:_____

Attach Relevant Documents (including but not limited to):
RFP, Responses to RFP, Technical Evaluation of RFP, Vendor Quotes, Technical Specifications, drawing numbers

Total Duration for Project Schedule:

M&S Contingency (%)**: 10%**	**Task Labor Contingency** (%)**: 0%**

Details of Estimate:

It is estimates that 0.1 scientist will lead this effort with no project cost associated with this.

Travel and M&S
Miscellaneous hardware and software costs are based on current nominal costs for items such as laptops and office software.

It is expected that two trips per year will be required for level 3 project manager to participate in reviews at FNAL or South Dakota. The cost per trip is based on past travel from BNL to FNAL and South Dakota.

Comments:

130.04.07.01 Management and Safety

WBS LEVEL 5	ACTIVITY ID	ACTIVITY DESCRIPTION	START DATE	FINISH DATE	DURATION	RESOURCE	HOURS	COST	TOTAL with Escalation
130.04.07.01.01 Management	CP9610	Management	1/11/2010	2/25/2022	3095	BNL M&S CS Travel		25,008	43,813
						Uncosted Physicist/Scientist	2,136		
		Management Total					2,136	25,008	43,813
130.04.07.01.01 Management Total							**2,136**	**25,008**	**43,813**
130.04.07.01.02 Safety	CP9620	Develop Preliminary Cyber Security Plai	6/25/2012	11/7/2012	95	Uncosted Physicist/Scientist	100		
		Develop Preliminary Cyber Security Plan Total					100		
	CP9630	Revise cyber security of computing syst	6/2/2015	6/10/2016	260	Uncosted Physicist/Scientist	99		
		Revise cyber security of computing systems Total					99		
	CP9640	Finalize Cyber Security Plan	12/4/2019	12/1/2020	260	Uncosted Physicist/Scientist	99		
		Finalize Cyber Security Plan Total					99		
	CP9650	Ensure Cyber Security of Computing Sy:	12/2/2020	4/5/2022	350	BNL M&S CS Travel		10,000	20,153
						Uncosted Physicist/Scientist	102		
		Ensure Cyber Security of Computing Systems Total					102	10,000	20,153
130.04.07.01.02 Safety Total							**399**	**10,000**	**20,153**
Grand Total							**2,534**	**35,007**	**63,966**

LBNE	**LBNE Water Cherenkov Detector** **BASIS of ESTIMATE FORM (BoE)**	**Date of Estimate: 1-Sept-2011** **Revision #: 1** **Prepared by: Brett Viren**

WBS number: 130.04.07.02	**WBS Title: Online Computing**	

Scope of Work Summary: The online system is comprised of the computing systems run online to collect and store raw physics data, process and filter raw data in near real time to a subset of interesting events at lower data rate, provide the software infrastructure for near real time monitoring of detector systems and data quality, and to provide a generalized run control system for setting up and controlling the running of the various detector systems in a coordinated manner. The responsibility for online processing and handling of data is separate from DAQ and begins when DAQ has readout the data from the electronics and transmits it to online systems. It ends with the hand off of data to the Infrastructure group for off-site archival.

Cost Type (check all that apply): _x_ EDIA M&S _x_ EDIA Labor _ MFG M&S _ MFG Labor	**Costing Method:** ___ Engineering Estimate ___ Physicist Estimate _ Level of Effort ___ Vendor Quote (attached) ___ Catalog Price (specify) _x_ Prior purchase or experience ___ Parametric Estimate ___ Other- Description:_____

Attach Relevant Documents (including but not limited to):
RFP, Responses to RFP, Technical Evaluation of RFP, Vendor Quotes, Technical Specifications, drawing numbers

Total Duration for Project Schedule:

M&S Contingency (%)**: 10%**	**Task Labor Contingency** (%)**: 20%**

Details of Estimate**:**

Estimates for labor are based on previous experience.

Travel and M&S
Costs are based on current, nominal prices for required hardware. Hardware requirements are described in the LBNE WC Computing Preliminary Requirements document (DocDB587).

Travel costs are based on two collaboration meetings per year and use cost per trip based on prior trips.

Contingency & Method:

Assumptions:

Comments:

130.04.07.02 Online Computing

WBS LEVEL 5	ACTIVITY ID	ACTIVITY DESCRIPTION	START DATE	FINISH DATE	DURATION	RESOURCE	HOURS	COST	TOTAL with Escalation
130.04.07.02.01 Raw Data Handl	CP9660	Conceptual Design	1/11/2010	1/3/2012	495	BNL M&S CE Costs		2,000	2,006
						BNL M&S CE from MA: Computing Services Specialist	351	36,960	37,608
						BNL M&S CE from MA: Travel		3,000	3,010
		Conceptual Design Total					351	41,960	42,624
	CP9670	Testing and R&D for Preliminary Design	1/4/2012	3/21/2013	303	BNL M&S CE Costs		2,000	2,075
						BNL M&S CE from MA: Computing Services Specialist	264	27,723	28,667
						BNL M&S CE from MA: Mechanical Designer	45	2,873	2,971
						BNL M&S CE from MA: Travel		3,000	3,112
		Testing and R&D for Preliminary Design Total					309	35,595	36,825
	CP9690	Testing & R&D for Final Design	9/17/2013	11/12/2014	289	BNL M&S CE Costs		6,000	6,510
						BNL M&S CE from MA: Computing Services Specialist	350	36,775	39,244
						BNL M&S CE from MA: Mechanical Designer	46	2,923	3,119
						BNL M&S CE from MA: Travel		3,000	3,255
		Testing & R&D for Final Design Total					396	48,697	52,127
	CP9710	Final System Development Work post CI	12/31/2014	3/25/2022	1875	BNL M&S CE Costs		105,994	129,239
						BNL M&S CE from MA: Computing Services Specialist	4,163	437,749	524,998
						BNL M&S CE from MA: Electronics Technician	169	10,664	12,790
						BNL M&S CE from MA: General Labor	319	8,864	10,631
						BNL M&S CE from MA: Mechanical Designer	131	8,296	9,950
						BNL M&S CE from MA: Travel		48,000	58,527
		Final System Development Work post CD-3 Total					4,781	619,568	746,134
130.04.07.02.01 Raw Data Handling Total							**5,838**	**745,820**	**877,710**
130.04.07.02.02 Prompt/Online	CP9760	Conceptual Design	1/11/2010	1/3/2012	495	BNL M&S CE from MA: Computing Services Specialist	351	36,960	37,608
						BNL M&S CE from MA: Travel		3,000	3,010
		Conceptual Design Total					351	39,960	40,618
	CP9770	Testing and R&D for Preliminary Design	1/4/2012	3/25/2013	305	BNL M&S CE Costs		4,999	5,187
						BNL M&S CE from MA: Computing Services Specialist	262	27,585	28,525
						BNL M&S CE from MA: Mechanical Designer	24	1,542	1,595
						BNL M&S CE from MA: Travel		3,001	3,114
		Testing and R&D for Preliminary Design Total					287	37,127	38,421
	CP9790	Testing & R&D for Final Design	9/17/2013	11/12/2014	289	BNL M&S CE Costs		5,000	5,425
						BNL M&S CE from MA: Computing Services Specialist	350	36,775	39,244
						BNL M&S CE from MA: Mechanical Designer	23	1,461	1,560
						BNL M&S CE from MA: Travel		3,000	3,255
		Testing & R&D for Final Design Total					373	46,236	49,483
	CP9810	Final System Development Work post CI	12/31/2014	3/29/2022	1877	BNL M&S CE Costs		50,003	60,976
						BNL M&S CE from MA: Computing Services Specialist	8,841	929,729	1,115,152
						BNL M&S CE from MA: Electronics Technician	169	10,676	12,805
						BNL M&S CE from MA: General Labor	469	13,050	15,652
						BNL M&S CE from MA: Mechanical Designer	94	5,932	7,115
						BNL M&S CE from MA: Travel		39,004	47,563

	CP9810	Final System Development Work post CD-3 Total					9,573	1,048,394	1,259,263
130.04.07.02.02 Prompt/Online Processing Total							**10,584**	**1,171,717**	**1,387,785**
130.04.07.02.03 Data Quality Mo	CP9860	Conceptual Design	1/11/2010	1/3/2012	495	BNL M&S CE from MA: Computing Services Specialist	703	73,920	75,216
						BNL M&S CE from MA: Travel		3,000	3,010
		Conceptual Design Total					703	76,920	78,226
	CP9870	Testing and R&D for Preliminary Design	1/4/2012	3/21/2013	303	BNL M&S CE from MA: Computing Services Specialist	521	54,808	56,675
						BNL M&S CE from MA: Travel		3,000	3,112
		Testing and R&D for Preliminary Design Total					521	57,807	59,788
	CP9890	Testing & R&D for Final Design	9/17/2013	11/12/2014	289	BNL M&S CE from MA: Computing Services Specialist	694	72,942	77,839
						BNL M&S CE from MA: Travel		3,000	3,255
		Testing & R&D for Final Design Total					694	75,942	81,094
	CP9910	Final System Development Work post Cl	12/31/2014	3/25/2022	1875	BNL M&S CE Costs		38,006	46,341
						BNL M&S CE from MA: Computing Services Specialist	5,231	550,144	659,794
						BNL M&S CE from MA: General Labor	225	6,257	7,504
						BNL M&S CE from MA: Travel		39,000	47,553
		Final System Development Work post CD-3 Total					5,456	633,408	761,193
130.04.07.02.03 Data Quality Monitoring Total							**7,374**	**844,078**	**980,299**
130.04.07.02.04 RunControl	CP10010	Final System Development Work post Cl	12/31/2014	3/25/2022	1875	BNL M&S CE Costs		19	23
						BNL M&S CE from MA: Computing Services Specialist	3,844	404,228	484,795
						BNL M&S CE from MA: General Labor	113	3,129	3,752
						BNL M&S CE from MA: Travel		38	46
		Final System Development Work post CD-3 Total					3,956	407,413	488,616
	CP9960	Conceptual Design	1/11/2010	1/3/2012	495	BNL M&S CE from MA: Computing Services Specialist	233	24,467	24,895
						BNL M&S CE from MA: Travel		3,000	3,010
		Conceptual Design Total					233	27,466	27,905
	CP9970	Testing and R&D for Preliminary Design	1/4/2012	2/14/2013	279	BNL M&S CE from MA: Computing Services Specialist	187	19,658	20,323
						BNL M&S CE from MA: Travel		2,999	3,107
		Testing and R&D for Preliminary Design Total					187	22,658	23,430
	CP9990	Testing & R&D for Final Design	9/17/2013	11/12/2014	289	BNL M&S CE from MA: Computing Services Specialist	188	19,755	21,081
						BNL M&S CE from MA: Travel		3,000	3,255
		Testing & R&D for Final Design Total					188	22,755	24,336
130.04.07.02.04 RunControl Total							**4,564**	**480,292**	**564,287**
Grand Total							**28,359**	**3,241,907**	**3,810,082**

LBNE WC Computing (1.4.6) Preliminary Requirements

Greg Sullivan, Brett Viren

March 23, 2010

Abstract

Preliminary requirements for Long Baseline Neutrino Experiment, Water Cherenkov Detector Computing group.

Contents

1 Introduction **2**

2 Basic Assumptions **2**

3 Common Requirements **3**

4 Online **3**

4.1 Assumptions . . . 3

4.2 Requirements . . . 4

4.2.1 Raw Data Handling . . . 4

4.2.2 Prompt Online Processing and Filtering . . . 4

4.2.3 Data Quality Monitoring . . . 5

4.2.4 Run Control System . . . 5

4.3 Onsite Power and Space . . . 6

4.3.1 Assumptions . . . 6

4.3.2 Communications Requirements . . . 6

4.3.3 Surface Building Requirements . . . 7

4.3.4 Underground Detector Site Requirements . . . 7

5 Offline **7**

5.1 Assumptions . . . 7

5.2 Requirements . . . 7

5.2.1 Simulation . . . 7

5.2.2 Reconstruction . . . 8

5.2.3 Production . . . 8

6 Infrastructure **9**
6.1 Assumptions . . . 9
6.2 Requirements . . . 9
6.2.1 Networking . . . 9
6.2.2 Software Framework . . . 10
6.2.3 CPU and Data Storage . . . 10
6.2.4 Batch Processing . . . 12
6.2.5 Collaborative Applications . . . 12

7 Interfaces **12**
7.1 Intra-group . . . 12
7.2 Inter-group . . . 13

1 Introduction

This document provides preliminary requirements for the Long Baseline Neutrino Experiment (LBNE), Water Cherenkov Detector (WCD) Computing group. The following sections give basic assumptions and list requirements common to the entire group. The assumptions and requirements specific to each major sub-group are given. Finally, the intra- and inter-group interface requirements are given.

The group is primarily responsible for accepting raw event data from the electronics group and archiving it off site. Next, the group is responsible for providing the software necessary to process, simulate, calibrate and reconstruct the events and for producing data sets for final analysis. Finally, the group must provide storage, CPU, networking and collaborative tools needed to support these efforts.

The group is split into three sub-groups. The *online* group is responsible for accepting the raw data and performing any prompt processing and handing the data to the *infrastructure* group for archival. The *offline* group is responsible for providing the simulation and reconstruction software and defining production jobs. The infrastructure group is responsible for supporting online and offline, in particular by providing a common software framework and storage, CPU and networking hardware. Below, the requirements of each group are detailed.

2 Basic Assumptions

Some basic assumptions drive the requirements of all three groups.

- Initially[1], the raw data rate and processing time is extrapolated from Super–Kamiokande (SK) and is taken to be 1 megabytes per second (MBps) for a single 100 kt WCD [1] with 3 WCD modules assumed.

[1]This assumption will eventually be updated by numbers from the Electronics group.

- Raw data as well as the results from production simulation and reconstruction runs are to be available to all collaboration members.
- Each sub-group cooperates with others and with external groups through well-defined interfaces. Joint task forces will be formed to define and implement them.
- Most effort is expected to come from collaboration members and funded off-project.
- The experiment will be long running with a large number of dispersed collaborators with disparate computing skills.

3 Common Requirements

There are requirements common to the entire Computing group.

- All software source code and documentation written by and for the Computing group will be available in a revision controlled manner that is, at a minimum, accessible in a read-only manner by the entire collaboration.
- The online and offline software groups will share a common software framework provided by the infrastructure group. This framework includes at least job configuration language, run and data models, file I/O and database access mechanisms.

4 Online

The online system is comprised of the computing systems run online to collect and store raw physics data, process and filter raw data in near real-time to a subset of interesting events at lower data rate, provide the software infrastructure for near real-time monitoring of detector systems and data quality, and to provide a generalized run control system for setting up and controlling the running of the various detector systems in a coordinated manner. The responsibility for online processing and handling of data is separate from DAQ and begins when DAQ has read out the data from the electronics and transmitted it to online systems. It ends with the hand off of data to the Infrastructure group for off-site archival.

4.1 Assumptions

The primary assumption in this susbsystem is that the Online should not inherently limit the physics potential of the detector as a whole. This means that the physics capability should be driven by the primary detector elements and configuration (e.g. size of detector, PMT coverage, depth, ...). It also means that the system should not be a major cost driver, or more particularly, the cost should not be highly dependent on the size of the detector, number of PMTs and marginal increments in data rates. Based on our experience in previous detectors with similar systems, we do not believe that the requirements for this detector

are particularly difficult from a technical standpoint. It is expected that the computing technology that will be available is sufficient to allow for a relatively standard design based on simple extrapolation from currently working subsystems of this kind.

4.2 Requirements

4.2.1 Raw Data Handling

Raw data handling will provide a system that collects event data from the DAQ system, in response to a trigger, performs any formatting necessary and subsequently provides it to a long term data archival system. This system will also provide data rate and system monitoring information to the run control and data quality monitoring systems.

Current preliminary studies of possible trigger event rates and data rates from the DAQ subsystem indicate that a raw rate on the order 1-10 kHz and a data rate on the order of 10-20 MB/s should be achievable. This is the current working assumption for the requirement. It is possible that a requirement of 50-100 MB/s could become necessary based on yet to be done physics sensitivity studies, and detailed design of the front-end electronics and DAQ systems. The time scale for making a final decision on this requirement without impacting the design schedule for this subsystem is soon after CD-1 approval. This system will also provide a buffer space for DAQ output on the order of days to weeks of data to accommodate no loss of running time or data when downstream systems are taking offline for maintenance or in the event of network outage. Assuming 20 MB/s this would be 72 GB/hour, or less then 2 TB/day, which is easily achievable with existing disk storage capabilities.

4.2.2 Prompt Online Processing and Filtering

The online processing system will collect high rate raw event data from the DAQ system in response to a trigger. This data will be formatted into the analysis framework data structure, where calibrations can be immediately applied and online reconstruction and background rejection algorithms can be applied to provide a reduced-rate, physics-rich data set that can be archived on spinning disk for rapid analysis. This system will also provide data rate and system monitoring information to the run control and data quality monitoring systems.

The requirements are:

- Data rate throughput to handle the average DAQ readout data rate, and enough excess to process backlog of data quickly. We are currently assuming a nominal rate of 10-20 MB/s, with a possibility of 50-100 Mb/s depending on the physics studies.

- Data reduction rate to produce a filtered output at a rate on the order of 1 MB/s. This implies reduction rate of 10-100 depending on final DAQ output rate.

- Online CPU power to accomplish above requirement. This depends on the final rates and the online algorithm execution speeds, which are not currently in hand. However,

based on experience from Super-Kamiokande and IceCube systems, we do not anticipate this will be a difficult task assuming today's computing speeds. Given that the CPU speed to cost ratio will continue to increase, and that the CPU can be purchased near the final phase of construction this should not be a cost driver.

- Provide infrastructure to run the software framework and reconstruction algorithms in the online context.
- Provide an interface with, and system status and monitoring information to, the experiment run control system.
- Provide a capability for rapid, near real-time, physics analysis clients to run in the filter system using reconstruction results from the filter clients in the offline software framework.

4.2.3 Data Quality Monitoring

This system is responsible for providing the framework and infrastructure to collect, analyze and display various low level and high level system data to provide near real-time monitoring of the detector performance and data quality. This WBS category will also provide a near real-time event display system for the detector data.

The requirements are:

- Provide a flexible and modular infrastructure to enable near real-time monitoring of the data quality for rapid response in order to maximize the fraction of quality operations in detector livetime.
- Provide a near real-time event display for visual shift monitoring of the detector and data quality.
- Provide a system for logging monitor data to enable offline selection of quality runs for future analysis.

4.2.4 Run Control System

The run control system will provide a global run control framework and program to initialize detector subsystems, start and end runs, control the running state of the detector, monitor the running state of the detector, and track run configurations of the detector.

The requirements are:

- Provide the system for high level run control and detector status and status logging.
- Provide the infrastructure and protocols for subsystems to receive commands (i.e. start/stop/pause...) from the high level run control system.

- Provide the infrastructure and protocols for subsystems to report subsystem status and subsystem monitoring data for display and logging by the high level run control.
- Provide a web based layer to enable detector status and control from authenticated and authorized browsers at remote locations.
- Provide an automated alert system capable of notifying fault and error conditions to remote devices.

4.3 Onsite Power and Space

The Power and space requirements are divided into two categories: 1) Underground in the mine at the detector site, and 2) in a surface building. These requirements assume the availability of high quality surface building space for the LBNE experiment as well as high quality and reliable data communications between the detector and the surface building. The communications requirement that assumed here is specified as well as a separate item for completeness. It is assumed that this model with high quality communications and surface building space is a cost effective approach, where as much computing as possible is placed at the surface.

The online system is required to collect data in real time from the DAQ system then buffer it, filter it using offline-like reconstruction using a small farm of computers, format it into an offline framework, and store and transmit data to the central production processing system at BNL. In addition, online systems are responsible for the run control system, online event display, and monitoring and control infrastructure.

4.3.1 Assumptions

1. Availability of high speed reliable communications between the detector location control room in the mine and the server room space in the surface building.
2. Availability of high-quality computer server room space in a surface building.
3. Availability of high speed connection to the backbone of outside internet at the server room in the surface building

4.3.2 Communications Requirements

1. One dedicated10 Gbit/s fiber between a router near the detector sites at depth in the mine and the computer server surface building.
2. A high quality router/switch near the detectors connecting the 10 Gbit/s fiber from the surface to dedicated 10 Gb/s fibers to each water Cherenkov detector control rooms.

4.3.3 Surface Building Requirements

1. Computer server room quality space in a surface building at the termination of the 10 Gb/s fiber. This space can be shared with other experiments, but we require 24/7 access.

2. Provided server room quality UPS power, cooling and humidity control.

3. 35 kilowatts UPS power per 100kT water detector.

4. Contiguous space for 3 standard computer racks per 100kT detector.

4.3.4 Underground Detector Site Requirements

For each detector:

1. Space for 2 standard computer racks at each detector control room. One rack is contingency space.

2. 12 kilowatts total of standard power for the racks (in-rack UPS is used here).

3. Control room space for 6 standard computer workstations

5 Offline

The offline sub-group provides simulation and reconstruction software and defines what jobs are to be run in a production manner.

5.1 Assumptions

It is assumed that the offline group focuses on the Physics-oriented part of the software and relies on the Infrastructure group to provide the software framework including basic simulation codes, file I/O and other lower-level layers.

5.2 Requirements

The requirements of each sub-group of Offline are given.

5.2.1 Simulation

The simulation software includes codes to provide initial particle fluxes (produced in cooperation with the Beam group), interactions and resulting final state kinematics as well as physical and electrical detector responses and the effects of triggering.

The requirements on the simulation software group are:

- Reproduce the real "raw" data given to the Online group by the DAQ/Electronics group both in format and content.

- Where significant, validate elements of the simulation against established sources of information (eg, cross sections against measurements, Cherenkov light model against SK data).

- The detector simulation framework module is expected to be based on the *de facto* standard Geant4 toolkit. It is also expected that specific, low level improvements or extensions to Geant4 will be needed. The group must validate new versions of Geant4 to determine if any changes to results are understood and should work with the Geant4 team to accept any improvements this group may find. If a replacement technology becomes available and viable it may be considered.

- Define the initial and nominal detector descriptions. They must be implemented independently from the simulation and in a way as to accommodate misaligned or as-built descriptions.

5.2.2 Reconstruction

The reconstruction software includes codes to apply calibrations (with input from measurements by the Calibration group) and measure parameters that characterize an event such as total energy and the likely individual particle types and momenta.

The requirements on the reconstruction software group are:

- Implement and tune existing state-of-the-art reconstruction algorithms (such as employed by SK) and develop novel reconstruction methods as needed to achieve the Physics goals.

- Reconstruction algorithms must be modular and general enough to allow for competing algorithms to be tested in the same job and to allow recursive application.

- Calibration inputs must be available from a central database.

- The same detector description providing the geometry for Simulation must be used for Reconstruction.

5.2.3 Production

The Production group provides job configurations for large scale simulation or reconstruction runs. The requirements on the production group are:

- Solicit and receive requirements for runs from the collaboration that exceed what individuals can perform on a local, ad-hoc basis.

- Manage and prioritize the requests given available resources.

- Provide estimated requirements for ongoing resource procurements.
- Work with the Infrastructure group which provides the batch processing system.

6 Infrastructure

The Infrastructure group is to support the Online and Offline groups. It provides network connectivity, a common software framework, data archival, and production computing hardware and batch system. It also provides collaborative applications such as mailing lists, software repository, issue (bug) tracker.

6.1 Assumptions

It is assumed the Infrastructure group will provide a main computing center at BNL for WCD data storage and processing. It is expected that other collaboration institutions will maintain centers with computing resources. It is assumed these resources will support other elements of the larger LBNE or may support WCD to some extent. It is expected that the Infrastructure group will work with such centers to share data and integrate resources where applicable.

6.2 Requirements

The requirements of each sub-group of Infrastructure are given.

6.2.1 Networking

The Networking sub-group assures adequate connectivity in support of the mission of the online and offline groups. The requirements for this group are:

- Assure network connectivity between the DAQ/Electronics and Online groups and from the Online buffer disks underground at the far site to the computing center archival storage.
- Assure real, sustainable bandwidth is available to provide a transfer rate at least equal to 150% of the assumed raw data rate. This is in order to provide enough overhead for fluctuations or to catch up after any sustained network outage.
- Assure network reliability sufficient that network downtime does not lead to the Online buffer disks becoming full.

6.2.2 Software Framework

The software framework must provide a means by which modular code can be written by dispersed developers with diverse abilities. In particular the software framework is required to:

- Be usable in both an online and offline context.
- Have an established community of experts that support it.
- Restrict the amount of software available only in binary form.
- Provide a detector description (geometry) and interface to required simulation packages (*eg.* Geant4, GENIE).
- Support creation of histograms and other statistical measures.
- Provide a user interface for configuration and running.
- Be documented well enough for an accomplished programmer to understand the design, fix bugs and make improvements and for a beginning user to make contributions.

6.2.3 CPU and Data Storage

Sufficient CPU is needed for simulation and reconstruction of raw data. This has been estimated by scaling [2] up from the SK experience. See the reference for assumptions and details of the estimation. The conclusions there are given as a range of the CPU needed and the most conservative values are taken here:

Sample	CPU-years
Data	263
Cosmic MC	109
Neutrino MC	47
Sum	419

This estimate is for the initial year of running and for a single processing pass. What follows is the required inflation when these two issues are included. Each of the three samples are considered in turn.

Data Neutrino data is three orders of magnitude down from cosmic μ data in number alone. These events tend have fewer hit PMTs as well so are faster to reconstruct. It is expected that the full data set will require more than one processing pass in the beginning as the cosmic-μ fitter is refined or mistakes are found but at some point the fitter will stabilize and no further reprocessing will be required. It is impossible to know when stability is reached and so an ad-hoc estimate is made: the full data set of any given year will be processed twice. This requires a stead state of 2×263 CPU-years available each year devoted to processing the data. The neutrino data will likely be reprocessed many times but this does not drive the estimate.

Cosmic MC This sample is not expected require to be reoccurring processing. It is expected that mistakes will be found in initial runs and subsequent runs will be needed. The target sample size of 100 kton-year should be ample and thus does not need to grow with detector run time. The estimate taken is that a new sample of the fixed size will be generated each year. This leads to a steady state requirement of 109 CPU-years available each year for cosmic MC.

Neutrino MC It is assumed that this sample will be regenerated twice per year. Assuming a sample size of 100× that of the current neutrino data set, the requirement for producing this sample grows each year and is $2 \times N_{year} * 47$ CPU-years for each year N_{year}.

These CPU requirements as a function of number of years running are summarized:

Sample	CPU-years
Data	2×263
Cosmic MC	109
Neutrino MC	$2 \times 47 \times N_{year}$
Sum	$635 + 94 \times N_{year}$

The data storage requirements include both reliable archival and fast, random access working storage. Archival storage must retain all raw data and the results of simulation and reconstruction. The requirement on reliability is taken to be that no more than 0.1% of the data is irretrievably lost. To reduce wear and tear on archival storage and to provide fast access to data for reprocess it is required that all data be kept on disk in the computing center.

The fundamental data rate assumption leads to a need to archive $\sim$ 90 TB/year of raw data assuming three 100 kton modules. This is a reoccurring requirement.

Simulation results should also be archived at least as long as they have not been superseded by novel runs. The storage needs vary depending on how much extra MC "truth" information is retained. It will be dominated by the simulated cosmic-μ sample and is taken to be double the size of one year of equivalent data in a single 100 kton detector or 60 TB.

To put these CPU and storage requirements numbers in perspective they are compared to an existing installation. Recent "disk heavy" nodes have been purchased by LBNE WCD project for installation in to the BNL RHIC/ATLAS Computing Facility (RACF). They contain 16 hyperthreaded 2.7 GHz cores (eight physical), 24 GB RAM and $\sim$5 TB of disk space usable for data files. The CPU requirements here would dictate the use of an initial 46 such nodes and an additional 6 nodes for each year of data taking. The total initial disk space would be 230 TB with an additional 30 TB per year. The initial cost would be \$250K and \$32K/year. Of course, it must be stated that it is expected that cost for equivalent computing will be vastly reduced by the time data taking starts.

6.2.4 Batch Processing

A batch processing system is required to support large scale production running at the main computing center. The infrastructure group must work with the Offline Production group and with other centers to integrate resources and improve efficiency. The group should investigate if exploiting Grid technology or similar is appropriate. Results of production running are to be archived at BNL and copies sent to other institutions that desire them.

6.2.5 Collaborative Applications

Various applications that support collaboration within the computing group and the collaboration as a whole are required. These application must provide:

- Web presence.
- Written communication and archival of messages.
- Version control system for software and documents.
- Issue (bug) tracking and software validation.
- Electronic log book for commissioning and day-to-day shift work.
- Data migration and catalog system.

7 Interfaces

The requirements on the interfaces between members of the Computing group and between the Computing group and the rest of the project are given in this section. Each interface is to be implemented by a joint task force.

7.1 Intra-group

The sub-groups in the Computing group are expected to work together in the following manners.

- Online and Infrastructure must assure that raw data and any needed slow control information must be safely archived in the computing center.
- Infrastructure must supply and support the software framework for use by Online and Offline groups.
- Networking must provide adequate connectivity largely driven by data Online will provide to Infrastructure.
- Production group must work with infrastructure in setting up the mechanisms of production running.

7.2 Inter-group

The Computing group must interface with the rest of the project in the following manners:

- DAQ/Electronics supplies raw data to the Online group.
- Calibration group supplies constants for use by Offline and stored in databases managed by Infrastructure.
- Infrastructure group must accept input from the entire collaboration on what collaboration applications are needed.
- The Production and Infrastructure groups must assure data, simulation and reconstruction results are available to the collaboration.

References

[1] Estimation by D. Jaffe.

[2] D. Jaffe, DocDB #506.

[3] SuperK Detector Simulation. and Reconstructon Benchmarks, Ed Kearns, DocDB#248.

LBNE	**LBNE Water Cherenkov Detector** **BASIS of ESTIMATE FORM (BoE)**	**Date of Estimate: 1-Sept-2011** **Revision #: 1** **Prepared by: Brett Viren**

WBS number: 130.04.07.03	**WBS Title: Offline Computing**	

Scope of Work Summary: Software to simulate, reconstruct and analyze raw DAQ data.

Cost Type (check all that apply): _x_ EDIA M&S _x_ EDIA Labor _ MFG M&S _ MFG Labor	**Costing Method:** ___ Engineering Estimate ___ Physicist Estimate _ Level of Effort ___ Vendor Quote (attached) ___ Catalog Price (specify) _x_ Prior purchase or experience ___ Parametric Estimate ___ Other- Description:_____

Attach Relevant Documents (including but not limited to):
RFP, Responses to RFP, Technical Evaluation of RFP, Vendor Quotes, Technical Specifications, drawing numbers

Total Duration for Project Schedule:

M&S Contingency (%)**: 10%**	**Task Labor Contingency** (%)**: 20%**

Details of Estimate:

Estimates for labor are based on previous experience.

Travel and M&S
M&S costs
None.

Each FTE that is on project is expected to participate in two collaboration meetings per year. The cost per trip is based on past travel from BNL to FNAL and South Dakota.

Contingency & Method:

Assumptions:

Comments:

130.04.07.03 Offline Computing

WBS LEVEL 5	ACTIVITY ID	ACTIVITY DESCRIPTION	START DATE	FINISH DATE	DURATION	RESOURCE	HOURS	COST	TOTAL with Escalation
130.04.07.03.02 Reconstruction	CP10270	Implement/tune SK/MB algorithms	4/3/2012	3/6/2018	1500	BNL M&S CE from UN: Computer Professional	12,480	624,000	684,413
						BNL M&S CE from UN: Travel		40,005	44,538
		Implement/tune SK/MB algorithms Total					12,480	664,005	728,951
130.04.07.03.02 Reconstruction Total							**12,480**	**664,005**	**728,951**
Grand Total							**12,480**	**664,005**	**728,951**

LBNE WC Computing (1.4.6) Preliminary Requirements

Greg Sullivan, Brett Viren

March 23, 2010

Abstract

Preliminary requirements for Long Baseline Neutrino Experiment, Water Cherenkov Detector Computing group.

Contents

1 Introduction **2**

2 Basic Assumptions **2**

3 Common Requirements **3**

4 Online **3**

4.1 Assumptions . . . 3

4.2 Requirements . . . 4

4.2.1 Raw Data Handling . . . 4

4.2.2 Prompt Online Processing and Filtering . . . 4

4.2.3 Data Quality Monitoring . . . 5

4.2.4 Run Control System . . . 5

4.3 Onsite Power and Space . . . 6

4.3.1 Assumptions . . . 6

4.3.2 Communications Requirements . . . 6

4.3.3 Surface Building Requirements . . . 7

4.3.4 Underground Detector Site Requirements . . . 7

5 Offline **7**

5.1 Assumptions . . . 7

5.2 Requirements . . . 7

5.2.1 Simulation . . . 7

5.2.2 Reconstruction . . . 8

5.2.3 Production . . . 8

6 Infrastructure **9**
6.1 Assumptions . . . 9
6.2 Requirements . . . 9
6.2.1 Networking . . . 9
6.2.2 Software Framework . . . 10
6.2.3 CPU and Data Storage . . . 10
6.2.4 Batch Processing . . . 12
6.2.5 Collaborative Applications . . . 12

7 Interfaces **12**
7.1 Intra-group . . . 12
7.2 Inter-group . . . 13

1 Introduction

This document provides preliminary requirements for the Long Baseline Neutrino Experiment (LBNE), Water Cherenkov Detector (WCD) Computing group. The following sections give basic assumptions and list requirements common to the entire group. The assumptions and requirements specific to each major sub-group are given. Finally, the intra- and inter-group interface requirements are given.

The group is primarily responsible for accepting raw event data from the electronics group and archiving it off site. Next, the group is responsible for providing the software necessary to process, simulate, calibrate and reconstruct the events and for producing data sets for final analysis. Finally, the group must provide storage, CPU, networking and collaborative tools needed to support these efforts.

The group is split into three sub-groups. The *online* group is responsible for accepting the raw data and performing any prompt processing and handing the data to the *infrastructure* group for archival. The *offline* group is responsible for providing the simulation and reconstruction software and defining production jobs. The infrastructure group is responsible for supporting online and offline, in particular by providing a common software framework and storage, CPU and networking hardware. Below, the requirements of each group are detailed.

2 Basic Assumptions

Some basic assumptions drive the requirements of all three groups.

- Initially[1], the raw data rate and processing time is extrapolated from Super–Kamiokande (SK) and is taken to be 1 megabytes per second (MBps) for a single 100 kt WCD [1] with 3 WCD modules assumed.

[1]This assumption will eventually be updated by numbers from the Electronics group.

- Raw data as well as the results from production simulation and reconstruction runs are to be available to all collaboration members.
- Each sub-group cooperates with others and with external groups through well-defined interfaces. Joint task forces will be formed to define and implement them.
- Most effort is expected to come from collaboration members and funded off-project.
- The experiment will be long running with a large number of dispersed collaborators with disparate computing skills.

3 Common Requirements

There are requirements common to the entire Computing group.

- All software source code and documentation written by and for the Computing group will be available in a revision controlled manner that is, at a minimum, accessible in a read-only manner by the entire collaboration.
- The online and offline software groups will share a common software framework provided by the infrastructure group. This framework includes at least job configuration language, run and data models, file I/O and database access mechanisms.

4 Online

The online system is comprised of the computing systems run online to collect and store raw physics data, process and filter raw data in near real-time to a subset of interesting events at lower data rate, provide the software infrastructure for near real-time monitoring of detector systems and data quality, and to provide a generalized run control system for setting up and controlling the running of the various detector systems in a coordinated manner. The responsibility for online processing and handling of data is separate from DAQ and begins when DAQ has read out the data from the electronics and transmitted it to online systems. It ends with the hand off of data to the Infrastructure group for off-site archival.

4.1 Assumptions

The primary assumption in this susbsystem is that the Online should not inherently limit the physics potential of the detector as a whole. This means that the physics capability should be driven by the primary detector elements and configuration (e.g. size of detector, PMT coverage, depth, ...). It also means that the system should not be a major cost driver, or more particularly, the cost should not be highly dependent on the size of the detector, number of PMTs and marginal increments in data rates. Based on our experience in previous detectors with similar systems, we do not believe that the requirements for this detector

are particularly difficult from a technical standpoint. It is expected that the computing technology that will be available is sufficient to allow for a relatively standard design based on simple extrapolation from currently working subsystems of this kind.

4.2 Requirements

4.2.1 Raw Data Handling

Raw data handling will provide a system that collects event data from the DAQ system, in response to a trigger, performs any formatting necessary and subsequently provides it to a long term data archival system. This system will also provide data rate and system monitoring information to the run control and data quality monitoring systems.

Current preliminary studies of possible trigger event rates and data rates from the DAQ subsystem indicate that a raw rate on the order 1-10 kHz and a data rate on the order of 10-20 MB/s should be achievable. This is the current working assumption for the requirement. It is possible that a requirement of 50-100 MB/s could become necessary based on yet to be done physics sensitivity studies, and detailed design of the front-end electronics and DAQ systems. The time scale for making a final decision on this requirement without impacting the design schedule for this subsystem is soon after CD-1 approval. This system will also provide a buffer space for DAQ output on the order of days to weeks of data to accommodate no loss of running time or data when downstream systems are taking offline for maintenance or in the event of network outage. Assuming 20 MB/s this would be 72 GB/hour, or less then 2 TB/day, which is easily achievable with existing disk storage capabilities.

4.2.2 Prompt Online Processing and Filtering

The online processing system will collect high rate raw event data from the DAQ system in response to a trigger. This data will be formatted into the analysis framework data structure, where calibrations can be immediately applied and online reconstruction and background rejection algorithms can be applied to provide a reduced-rate, physics-rich data set that can be archived on spinning disk for rapid analysis. This system will also provide data rate and system monitoring information to the run control and data quality monitoring systems.

The requirements are:

- Data rate throughput to handle the average DAQ readout data rate, and enough excess to process backlog of data quickly. We are currently assuming a nominal rate of 10-20 MB/s, with a possibility of 50-100 Mb/s depending on the physics studies.

- Data reduction rate to produce a filtered output at a rate on the order of 1 MB/s. This implies reduction rate of 10-100 depending on final DAQ output rate.

- Online CPU power to accomplish above requirement. This depends on the final rates and the online algorithm execution speeds, which are not currently in hand. However,

based on experience from Super-Kamiokande and IceCube systems, we do not anticipate this will be a difficult task assuming today's computing speeds. Given that the CPU speed to cost ratio will continue to increase, and that the CPU can be purchased near the final phase of construction this should not be a cost driver.

- Provide infrastructure to run the software framework and reconstruction algorithms in the online context.
- Provide an interface with, and system status and monitoring information to, the experiment run control system.
- Provide a capability for rapid, near real-time, physics analysis clients to run in the filter system using reconstruction results from the filter clients in the offline software framework.

4.2.3 Data Quality Monitoring

This system is responsible for providing the framework and infrastructure to collect, analyze and display various low level and high level system data to provide near real-time monitoring of the detector performance and data quality. This WBS category will also provide a near real-time event display system for the detector data.

The requirements are:

- Provide a flexible and modular infrastructure to enable near real-time monitoring of the data quality for rapid response in order to maximize the fraction of quality operations in detector livetime.
- Provide a near real-time event display for visual shift monitoring of the detector and data quality.
- Provide a system for logging monitor data to enable offline selection of quality runs for future analysis.

4.2.4 Run Control System

The run control system will provide a global run control framework and program to initialize detector subsystems, start and end runs, control the running state of the detector, monitor the running state of the detector, and track run configurations of the detector.

The requirements are:

- Provide the system for high level run control and detector status and status logging.
- Provide the infrastructure and protocols for subsystems to receive commands (i.e. start/stop/pause...) from the high level run control system.

- Provide the infrastructure and protocols for subsystems to report subsystem status and subsystem monitoring data for display and logging by the high level run control.
- Provide a web based layer to enable detector status and control from authenticated and authorized browsers at remote locations.
- Provide an automated alert system capable of notifying fault and error conditions to remote devices.

4.3 Onsite Power and Space

The Power and space requirements are divided into two categories: 1) Underground in the mine at the detector site, and 2) in a surface building. These requirements assume the availability of high quality surface building space for the LBNE experiment as well as high quality and reliable data communications between the detector and the surface building. The communications requirement that assumed here is specified as well as a separate item for completeness. It is assumed that this model with high quality communications and surface building space is a cost effective approach, where as much computing as possible is placed at the surface.

The online system is required to collect data in real time from the DAQ system then buffer it, filter it using offline-like reconstruction using a small farm of computers, format it into an offline framework, and store and transmit data to the central production processing system at BNL. In addition, online systems are responsible for the run control system, online event display, and monitoring and control infrastructure.

4.3.1 Assumptions

1. Availability of high speed reliable communications between the detector location control room in the mine and the server room space in the surface building.
2. Availability of high-quality computer server room space in a surface building.
3. Availability of high speed connection to the backbone of outside internet at the server room in the surface building

4.3.2 Communications Requirements

1. One dedicated10 Gbit/s fiber between a router near the detector sites at depth in the mine and the computer server surface building.
2. A high quality router/switch near the detectors connecting the 10 Gbit/s fiber from the surface to dedicated 10 Gb/s fibers to each water Cherenkov detector control rooms.

4.3.3 Surface Building Requirements

1. Computer server room quality space in a surface building at the termination of the 10 Gb/s fiber. This space can be shared with other experiments, but we require 24/7 access.

2. Provided server room quality UPS power, cooling and humidity control.

3. 35 kilowatts UPS power per 100kT water detector.

4. Contiguous space for 3 standard computer racks per 100kT detector.

4.3.4 Underground Detector Site Requirements

For each detector:

1. Space for 2 standard computer racks at each detector control room. One rack is contingency space.

2. 12 kilowatts total of standard power for the racks (in-rack UPS is used here).

3. Control room space for 6 standard computer workstations

5 Offline

The offline sub-group provides simulation and reconstruction software and defines what jobs are to be run in a production manner.

5.1 Assumptions

It is assumed that the offline group focuses on the Physics-oriented part of the software and relies on the Infrastructure group to provide the software framework including basic simulation codes, file I/O and other lower-level layers.

5.2 Requirements

The requirements of each sub-group of Offline are given.

5.2.1 Simulation

The simulation software includes codes to provide initial particle fluxes (produced in cooperation with the Beam group), interactions and resulting final state kinematics as well as physical and electrical detector responses and the effects of triggering.

The requirements on the simulation software group are:

- Reproduce the real "raw" data given to the Online group by the DAQ/Electronics group both in format and content.

- Where significant, validate elements of the simulation against established sources of information (eg, cross sections against measurements, Cherenkov light model against SK data).

- The detector simulation framework module is expected to be based on the *de facto* standard Geant4 toolkit. It is also expected that specific, low level improvements or extensions to Geant4 will be needed. The group must validate new versions of Geant4 to determine if any changes to results are understood and should work with the Geant4 team to accept any improvements this group may find. If a replacement technology becomes available and viable it may be considered.

- Define the initial and nominal detector descriptions. They must be implemented independently from the simulation and in a way as to accommodate misaligned or as-built descriptions.

5.2.2 Reconstruction

The reconstruction software includes codes to apply calibrations (with input from measurements by the Calibration group) and measure parameters that characterize an event such as total energy and the likely individual particle types and momenta.

The requirements on the reconstruction software group are:

- Implement and tune existing state-of-the-art reconstruction algorithms (such as employed by SK) and develop novel reconstruction methods as needed to achieve the Physics goals.

- Reconstruction algorithms must be modular and general enough to allow for competing algorithms to be tested in the same job and to allow recursive application.

- Calibration inputs must be available from a central database.

- The same detector description providing the geometry for Simulation must be used for Reconstruction.

5.2.3 Production

The Production group provides job configurations for large scale simulation or reconstruction runs. The requirements on the production group are:

- Solicit and receive requirements for runs from the collaboration that exceed what individuals can perform on a local, ad-hoc basis.

- Manage and prioritize the requests given available resources.

- Provide estimated requirements for ongoing resource procurements.
- Work with the Infrastructure group which provides the batch processing system.

6 Infrastructure

The Infrastructure group is to support the Online and Offline groups. It provides network connectivity, a common software framework, data archival, and production computing hardware and batch system. It also provides collaborative applications such as mailing lists, software repository, issue (bug) tracker.

6.1 Assumptions

It is assumed the Infrastructure group will provide a main computing center at BNL for WCD data storage and processing. It is expected that other collaboration institutions will maintain centers with computing resources. It is assumed these resources will support other elements of the larger LBNE or may support WCD to some extent. It is expected that the Infrastructure group will work with such centers to share data and integrate resources where applicable.

6.2 Requirements

The requirements of each sub-group of Infrastructure are given.

6.2.1 Networking

The Networking sub-group assures adequate connectivity in support of the mission of the online and offline groups. The requirements for this group are:

- Assure network connectivity between the DAQ/Electronics and Online groups and from the Online buffer disks underground at the far site to the computing center archival storage.
- Assure real, sustainable bandwidth is available to provide a transfer rate at least equal to 150% of the assumed raw data rate. This is in order to provide enough overhead for fluctuations or to catch up after any sustained network outage.
- Assure network reliability sufficient that network downtime does not lead to the Online buffer disks becoming full.

6.2.2 Software Framework

The software framework must provide a means by which modular code can be written by dispersed developers with diverse abilities. In particular the software framework is required to:

- Be usable in both an online and offline context.
- Have an established community of experts that support it.
- Restrict the amount of software available only in binary form.
- Provide a detector description (geometry) and interface to required simulation packages (*eg.* Geant4, GENIE).
- Support creation of histograms and other statistical measures.
- Provide a user interface for configuration and running.
- Be documented well enough for an accomplished programmer to understand the design, fix bugs and make improvements and for a beginning user to make contributions.

6.2.3 CPU and Data Storage

Sufficient CPU is needed for simulation and reconstruction of raw data. This has been estimated by scaling [2] up from the SK experience. See the reference for assumptions and details of the estimation. The conclusions there are given as a range of the CPU needed and the most conservative values are taken here:

Sample	CPU-years
Data	263
Cosmic MC	109
Neutrino MC	47
Sum	419

This estimate is for the initial year of running and for a single processing pass. What follows is the required inflation when these two issues are included. Each of the three samples are considered in turn.

Data Neutrino data is three orders of magnitude down from cosmic μ data in number alone. These events tend have fewer hit PMTs as well so are faster to reconstruct. It is expected that the full data set will require more than one processing pass in the beginning as the cosmic-μ fitter is refined or mistakes are found but at some point the fitter will stabilize and no further reprocessing will be required. It is impossible to know when stability is reached and so an ad-hoc estimate is made: the full data set of any given year will be processed twice. This requires a stead state of 2×263 CPU-years available each year devoted to processing the data. The neutrino data will likely be reprocessed many times but this does not drive the estimate.

Cosmic MC This sample is not expected require to be reoccurring processing. It is expected that mistakes will be found in initial runs and subsequent runs will be needed. The target sample size of 100 kton-year should be ample and thus does not need to grow with detector run time. The estimate taken is that a new sample of the fixed size will be generated each year. This leads to a steady state requirement of 109 CPU-years available each year for cosmic MC.

Neutrino MC It is assumed that this sample will be regenerated twice per year. Assuming a sample size of 100× that of the current neutrino data set, the requirement for producing this sample grows each year and is $2 \times N_{year} * 47$ CPU-years for each year N_{year}.

These CPU requirements as a function of number of years running are summarized:

Sample	CPU-years
Data	2×263
Cosmic MC	109
Neutrino MC	$2 \times 47 \times N_{year}$
Sum	$635 + 94 \times N_{year}$

The data storage requirements include both reliable archival and fast, random access working storage. Archival storage must retain all raw data and the results of simulation and reconstruction. The requirement on reliability is taken to be that no more than 0.1% of the data is irretrievably lost. To reduce wear and tear on archival storage and to provide fast access to data for reprocess it is required that all data be kept on disk in the computing center.

The fundamental data rate assumption leads to a need to archive $\sim$ 90 TB/year of raw data assuming three 100 kton modules. This is a reoccurring requirement.

Simulation results should also be archived at least as long as they have not been superseded by novel runs. The storage needs vary depending on how much extra MC "truth" information is retained. It will be dominated by the simulated cosmic-μ sample and is taken to be double the size of one year of equivalent data in a single 100 kton detector or 60 TB.

To put these CPU and storage requirements numbers in perspective they are compared to an existing installation. Recent "disk heavy" nodes have been purchased by LBNE WCD project for installation in to the BNL RHIC/ATLAS Computing Facility (RACF). They contain 16 hyperthreaded 2.7 GHz cores (eight physical), 24 GB RAM and $\sim$5 TB of disk space usable for data files. The CPU requirements here would dictate the use of an initial 46 such nodes and an additional 6 nodes for each year of data taking. The total initial disk space would be 230 TB with an additional 30 TB per year. The initial cost would be \$250K and \$32K/year. Of course, it must be stated that it is expected that cost for equivalent computing will be vastly reduced by the time data taking starts.

6.2.4 Batch Processing

A batch processing system is required to support large scale production running at the main computing center. The infrastructure group must work with the Offline Production group and with other centers to integrate resources and improve efficiency. The group should investigate if exploiting Grid technology or similar is appropriate. Results of production running are to be archived at BNL and copies sent to other institutions that desire them.

6.2.5 Collaborative Applications

Various applications that support collaboration within the computing group and the collaboration as a whole are required. These application must provide:

- Web presence.
- Written communication and archival of messages.
- Version control system for software and documents.
- Issue (bug) tracking and software validation.
- Electronic log book for commissioning and day-to-day shift work.
- Data migration and catalog system.

7 Interfaces

The requirements on the interfaces between members of the Computing group and between the Computing group and the rest of the project are given in this section. Each interface is to be implemented by a joint task force.

7.1 Intra-group

The sub-groups in the Computing group are expected to work together in the following manners.

- Online and Infrastructure must assure that raw data and any needed slow control information must be safely archived in the computing center.
- Infrastructure must supply and support the software framework for use by Online and Offline groups.
- Networking must provide adequate connectivity largely driven by data Online will provide to Infrastructure.
- Production group must work with infrastructure in setting up the mechanisms of production running.

7.2 Inter-group

The Computing group must interface with the rest of the project in the following manners:

- DAQ/Electronics supplies raw data to the Online group.
- Calibration group supplies constants for use by Offline and stored in databases managed by Infrastructure.
- Infrastructure group must accept input from the entire collaboration on what collaboration applications are needed.
- The Production and Infrastructure groups must assure data, simulation and reconstruction results are available to the collaboration.

References

[1] Estimation by D. Jaffe.

[2] D. Jaffe, DocDB #506.

[3] SuperK Detector Simulation. and Reconstructon Benchmarks, Ed Kearns, DocDB#248.

LBNE	**LBNE Water Cherenkov Detector** **BASIS of ESTIMATE FORM (BoE)**	**Date of Estimate: 1-Sept-2011** **Revision #: 1** **Prepared by: Brett Viren**

WBS number: 130.04.07.04	**WBS Title: Infrastructure Computing**	

Scope of Work Summary: Support Online and Offline computing

Cost Type (check all that apply): _x_ EDIA M&S _x_ EDIA Labor _ MFG M&S _ MFG Labor	**Costing Method:** ___ Engineering Estimate ___ Physicist Estimate _ Level of Effort ___ Vendor Quote (attached) ___ Catalog Price (specify) _x__ Prior purchase or experience ___ Parametric Estimate ___ Other- Description:_____

Attach Relevant Documents (including but not limited to):
RFP, Responses to RFP, Technical Evaluation of RFP, Vendor Quotes, Technical Specifications, drawing numbers

Total Duration for Project Schedule:

M&S Contingency (%)**: 10%**	**Task Labor Contingency** (%)**: 20%**

Details of Estimate:

The estimated labor is based on previous experience. One FTE computer professional is needed from FY13 to FY19 and 3FTEs are needed for FY21 and 22 for maintenance of the WCD computing facility.

Travel and M&S
M&S costs
Purchase of computer nodes for data storage.

It is expected that two trips per year will be required for level 3 project manager to participate in reviews at FNAL. The cost per trip is based on past travel from BNL to FNAL and South Dakota.

Contingency & Method:

Assumptions:

Comments:

130.04.07.04 Infrastructure

WBS LEVEL 5	ACTIVITY ID	ACTIVITY DESCRIPTION	START DATE	FINISH DATE	DURATION	RESOURCE	HOURS	COST	TOTAL with Escalation
130.04.07.04.01 Framework	CP10350	Framework - Support	11/16/2012	7/16/2021	2220	BNL M&S CS PO Purchases		43,001	59,124
						Computing Support Personnel A4	16,628	1,015,154	1,556,046
		Framework - Support Total					16,628	1,058,155	1,615,170
	CP10360	Framework - Maintenance	11/16/2012	7/16/2021	2220	BNL M&S CS PO Purchases		43,001	59,124
		Framework - Maintenance Total						43,001	59,124
130.04.07.04.01 Framework Total							**16,628**	**1,101,157**	**1,674,294**
130.04.07.04.02 Support Applica	CP10390	Support Applications Labor	12/11/2017	5/31/2022	1167	Computing Support Personnel A4	4,155	253,640	419,609
		Support Applications Labor Total					4,155	253,640	419,609
	CP10400	Support Applications Maintenance	12/11/2017	5/31/2022	1167	BNL M&S CS Travel		11,005	21,354
		Support Applications Maintenance Total						11,005	21,354
130.04.07.04.02 Support Applications Total							**4,155**	**264,645**	**440,963**
130.04.07.04.03 Data Archival	CP10450	Data Archival Labor Support	6/20/2013	12/6/2017	1132	Computing Support Personnel A4	2,083	127,163	186,753
		Data Archival Labor Support Total					2,083	127,163	186,753
	CP10460	Data Archival Maintenance	6/20/2013	12/6/2017	1132	BNL M&S CS PO Purchases		35,998	47,423
		Data Archival Maintenance Total						35,998	47,423
130.04.07.04.03 Data Archival Total							**2,083**	**163,161**	**234,177**
130.04.07.04.04 Hardware	CP10500	Hardware Labor Support	1/25/2018	5/30/2022	1133	Computing Support Personnel A4	2,085	127,276	210,859
		Hardware Labor Support Total					2,085	127,276	210,859
	CP10510	CPU Purchase	1/25/2018	5/27/2022	1132	BNL M&S CS Laboratory Equipment		471,999	651,545
		CPU Purchase Total						471,999	651,545
130.04.07.04.04 Hardware Total							**2,085**	**599,274**	**862,404**
Grand Total							**24,950**	**2,128,237**	**3,211,838**

LBNE WC Computing (1.4.6) Preliminary Requirements

Greg Sullivan, Brett Viren

March 23, 2010

Abstract

Preliminary requirements for Long Baseline Neutrino Experiment, Water Cherenkov Detector Computing group.

Contents

1 Introduction **2**

2 Basic Assumptions **2**

3 Common Requirements **3**

4 Online **3**

4.1 Assumptions . . . 3

4.2 Requirements . . . 4

4.2.1 Raw Data Handling . . . 4

4.2.2 Prompt Online Processing and Filtering . . . 4

4.2.3 Data Quality Monitoring . . . 5

4.2.4 Run Control System . . . 5

4.3 Onsite Power and Space . . . 6

4.3.1 Assumptions . . . 6

4.3.2 Communications Requirements . . . 6

4.3.3 Surface Building Requirements . . . 7

4.3.4 Underground Detector Site Requirements . . . 7

5 Offline **7**

5.1 Assumptions . . . 7

5.2 Requirements . . . 7

5.2.1 Simulation . . . 7

5.2.2 Reconstruction . . . 8

5.2.3 Production . . . 8

6 Infrastructure **9**
6.1 Assumptions . . . 9
6.2 Requirements . . . 9
6.2.1 Networking . . . 9
6.2.2 Software Framework . . . 10
6.2.3 CPU and Data Storage . . . 10
6.2.4 Batch Processing . . . 12
6.2.5 Collaborative Applications . . . 12

7 Interfaces **12**
7.1 Intra-group . . . 12
7.2 Inter-group . . . 13

1 Introduction

This document provides preliminary requirements for the Long Baseline Neutrino Experiment (LBNE), Water Cherenkov Detector (WCD) Computing group. The following sections give basic assumptions and list requirements common to the entire group. The assumptions and requirements specific to each major sub-group are given. Finally, the intra- and inter-group interface requirements are given.

The group is primarily responsible for accepting raw event data from the electronics group and archiving it off site. Next, the group is responsible for providing the software necessary to process, simulate, calibrate and reconstruct the events and for producing data sets for final analysis. Finally, the group must provide storage, CPU, networking and collaborative tools needed to support these efforts.

The group is split into three sub-groups. The *online* group is responsible for accepting the raw data and performing any prompt processing and handing the data to the *infrastructure* group for archival. The *offline* group is responsible for providing the simulation and reconstruction software and defining production jobs. The infrastructure group is responsible for supporting online and offline, in particular by providing a common software framework and storage, CPU and networking hardware. Below, the requirements of each group are detailed.

2 Basic Assumptions

Some basic assumptions drive the requirements of all three groups.

- Initially[1], the raw data rate and processing time is extrapolated from Super–Kamiokande (SK) and is taken to be 1 megabytes per second (MBps) for a single 100 kt WCD [1] with 3 WCD modules assumed.

[1]This assumption will eventually be updated by numbers from the Electronics group.

- Raw data as well as the results from production simulation and reconstruction runs are to be available to all collaboration members.
- Each sub-group cooperates with others and with external groups through well-defined interfaces. Joint task forces will be formed to define and implement them.
- Most effort is expected to come from collaboration members and funded off-project.
- The experiment will be long running with a large number of dispersed collaborators with disparate computing skills.

3 Common Requirements

There are requirements common to the entire Computing group.

- All software source code and documentation written by and for the Computing group will be available in a revision controlled manner that is, at a minimum, accessible in a read-only manner by the entire collaboration.
- The online and offline software groups will share a common software framework provided by the infrastructure group. This framework includes at least job configuration language, run and data models, file I/O and database access mechanisms.

4 Online

The online system is comprised of the computing systems run online to collect and store raw physics data, process and filter raw data in near real-time to a subset of interesting events at lower data rate, provide the software infrastructure for near real-time monitoring of detector systems and data quality, and to provide a generalized run control system for setting up and controlling the running of the various detector systems in a coordinated manner. The responsibility for online processing and handling of data is separate from DAQ and begins when DAQ has read out the data from the electronics and transmitted it to online systems. It ends with the hand off of data to the Infrastructure group for off-site archival.

4.1 Assumptions

The primary assumption in this susbsystem is that the Online should not inherently limit the physics potential of the detector as a whole. This means that the physics capability should be driven by the primary detector elements and configuration (e.g. size of detector, PMT coverage, depth, ...). It also means that the system should not be a major cost driver, or more particularly, the cost should not be highly dependent on the size of the detector, number of PMTs and marginal increments in data rates. Based on our experience in previous detectors with similar systems, we do not believe that the requirements for this detector

are particularly difficult from a technical standpoint. It is expected that the computing technology that will be available is sufficient to allow for a relatively standard design based on simple extrapolation from currently working subsystems of this kind.

4.2 Requirements

4.2.1 Raw Data Handling

Raw data handling will provide a system that collects event data from the DAQ system, in response to a trigger, performs any formatting necessary and subsequently provides it to a long term data archival system. This system will also provide data rate and system monitoring information to the run control and data quality monitoring systems.

Current preliminary studies of possible trigger event rates and data rates from the DAQ subsystem indicate that a raw rate on the order 1-10 kHz and a data rate on the order of 10-20 MB/s should be achievable. This is the current working assumption for the requirement. It is possible that a requirement of 50-100 MB/s could become necessary based on yet to be done physics sensitivity studies, and detailed design of the front-end electronics and DAQ systems. The time scale for making a final decision on this requirement without impacting the design schedule for this subsystem is soon after CD-1 approval. This system will also provide a buffer space for DAQ output on the order of days to weeks of data to accommodate no loss of running time or data when downstream systems are taking offline for maintenance or in the event of network outage. Assuming 20 MB/s this would be 72 GB/hour, or less then 2 TB/day, which is easily achievable with existing disk storage capabilities.

4.2.2 Prompt Online Processing and Filtering

The online processing system will collect high rate raw event data from the DAQ system in response to a trigger. This data will be formatted into the analysis framework data structure, where calibrations can be immediately applied and online reconstruction and background rejection algorithms can be applied to provide a reduced-rate, physics-rich data set that can be archived on spinning disk for rapid analysis. This system will also provide data rate and system monitoring information to the run control and data quality monitoring systems.

The requirements are:

- Data rate throughput to handle the average DAQ readout data rate, and enough excess to process backlog of data quickly. We are currently assuming a nominal rate of 10-20 MB/s, with a possibility of 50-100 Mb/s depending on the physics studies.

- Data reduction rate to produce a filtered output at a rate on the order of 1 MB/s. This implies reduction rate of 10-100 depending on final DAQ output rate.

- Online CPU power to accomplish above requirement. This depends on the final rates and the online algorithm execution speeds, which are not currently in hand. However,

based on experience from Super-Kamiokande and IceCube systems, we do not anticipate this will be a difficult task assuming today's computing speeds. Given that the CPU speed to cost ratio will continue to increase, and that the CPU can be purchased near the final phase of construction this should not be a cost driver.

- Provide infrastructure to run the software framework and reconstruction algorithms in the online context.
- Provide an interface with, and system status and monitoring information to, the experiment run control system.
- Provide a capability for rapid, near real-time, physics analysis clients to run in the filter system using reconstruction results from the filter clients in the offline software framework.

4.2.3 Data Quality Monitoring

This system is responsible for providing the framework and infrastructure to collect, analyze and display various low level and high level system data to provide near real-time monitoring of the detector performance and data quality. This WBS category will also provide a near real-time event display system for the detector data.

The requirements are:

- Provide a flexible and modular infrastructure to enable near real-time monitoring of the data quality for rapid response in order to maximize the fraction of quality operations in detector livetime.
- Provide a near real-time event display for visual shift monitoring of the detector and data quality.
- Provide a system for logging monitor data to enable offline selection of quality runs for future analysis.

4.2.4 Run Control System

The run control system will provide a global run control framework and program to initialize detector subsystems, start and end runs, control the running state of the detector, monitor the running state of the detector, and track run configurations of the detector.

The requirements are:

- Provide the system for high level run control and detector status and status logging.
- Provide the infrastructure and protocols for subsystems to receive commands (i.e. start/stop/pause...) from the high level run control system.

- Provide the infrastructure and protocols for subsystems to report subsystem status and subsystem monitoring data for display and logging by the high level run control.
- Provide a web based layer to enable detector status and control from authenticated and authorized browsers at remote locations.
- Provide an automated alert system capable of notifying fault and error conditions to remote devices.

4.3 Onsite Power and Space

The Power and space requirements are divided into two categories: 1) Underground in the mine at the detector site, and 2) in a surface building. These requirements assume the availability of high quality surface building space for the LBNE experiment as well as high quality and reliable data communications between the detector and the surface building. The communications requirement that assumed here is specified as well as a separate item for completeness. It is assumed that this model with high quality communications and surface building space is a cost effective approach, where as much computing as possible is placed at the surface.

The online system is required to collect data in real time from the DAQ system then buffer it, filter it using offline-like reconstruction using a small farm of computers, format it into an offline framework, and store and transmit data to the central production processing system at BNL. In addition, online systems are responsible for the run control system, online event display, and monitoring and control infrastructure.

4.3.1 Assumptions

1. Availability of high speed reliable communications between the detector location control room in the mine and the server room space in the surface building.
2. Availability of high-quality computer server room space in a surface building.
3. Availability of high speed connection to the backbone of outside internet at the server room in the surface building

4.3.2 Communications Requirements

1. One dedicated10 Gbit/s fiber between a router near the detector sites at depth in the mine and the computer server surface building.
2. A high quality router/switch near the detectors connecting the 10 Gbit/s fiber from the surface to dedicated 10 Gb/s fibers to each water Cherenkov detector control rooms.

4.3.3 Surface Building Requirements

1. Computer server room quality space in a surface building at the termination of the 10 Gb/s fiber. This space can be shared with other experiments, but we require 24/7 access.

2. Provided server room quality UPS power, cooling and humidity control.

3. 35 kilowatts UPS power per 100kT water detector.

4. Contiguous space for 3 standard computer racks per 100kT detector.

4.3.4 Underground Detector Site Requirements

For each detector:

1. Space for 2 standard computer racks at each detector control room. One rack is contingency space.

2. 12 kilowatts total of standard power for the racks (in-rack UPS is used here).

3. Control room space for 6 standard computer workstations

5 Offline

The offline sub-group provides simulation and reconstruction software and defines what jobs are to be run in a production manner.

5.1 Assumptions

It is assumed that the offline group focuses on the Physics-oriented part of the software and relies on the Infrastructure group to provide the software framework including basic simulation codes, file I/O and other lower-level layers.

5.2 Requirements

The requirements of each sub-group of Offline are given.

5.2.1 Simulation

The simulation software includes codes to provide initial particle fluxes (produced in cooperation with the Beam group), interactions and resulting final state kinematics as well as physical and electrical detector responses and the effects of triggering.

The requirements on the simulation software group are:

- Reproduce the real "raw" data given to the Online group by the DAQ/Electronics group both in format and content.

- Where significant, validate elements of the simulation against established sources of information (eg, cross sections against measurements, Cherenkov light model against SK data).

- The detector simulation framework module is expected to be based on the *de facto* standard Geant4 toolkit. It is also expected that specific, low level improvements or extensions to Geant4 will be needed. The group must validate new versions of Geant4 to determine if any changes to results are understood and should work with the Geant4 team to accept any improvements this group may find. If a replacement technology becomes available and viable it may be considered.

- Define the initial and nominal detector descriptions. They must be implemented independently from the simulation and in a way as to accommodate misaligned or as-built descriptions.

5.2.2 Reconstruction

The reconstruction software includes codes to apply calibrations (with input from measurements by the Calibration group) and measure parameters that characterize an event such as total energy and the likely individual particle types and momenta.

The requirements on the reconstruction software group are:

- Implement and tune existing state-of-the-art reconstruction algorithms (such as employed by SK) and develop novel reconstruction methods as needed to achieve the Physics goals.

- Reconstruction algorithms must be modular and general enough to allow for competing algorithms to be tested in the same job and to allow recursive application.

- Calibration inputs must be available from a central database.

- The same detector description providing the geometry for Simulation must be used for Reconstruction.

5.2.3 Production

The Production group provides job configurations for large scale simulation or reconstruction runs. The requirements on the production group are:

- Solicit and receive requirements for runs from the collaboration that exceed what individuals can perform on a local, ad-hoc basis.

- Manage and prioritize the requests given available resources.

- Provide estimated requirements for ongoing resource procurements.
- Work with the Infrastructure group which provides the batch processing system.

6 Infrastructure

The Infrastructure group is to support the Online and Offline groups. It provides network connectivity, a common software framework, data archival, and production computing hardware and batch system. It also provides collaborative applications such as mailing lists, software repository, issue (bug) tracker.

6.1 Assumptions

It is assumed the Infrastructure group will provide a main computing center at BNL for WCD data storage and processing. It is expected that other collaboration institutions will maintain centers with computing resources. It is assumed these resources will support other elements of the larger LBNE or may support WCD to some extent. It is expected that the Infrastructure group will work with such centers to share data and integrate resources where applicable.

6.2 Requirements

The requirements of each sub-group of Infrastructure are given.

6.2.1 Networking

The Networking sub-group assures adequate connectivity in support of the mission of the online and offline groups. The requirements for this group are:

- Assure network connectivity between the DAQ/Electronics and Online groups and from the Online buffer disks underground at the far site to the computing center archival storage.
- Assure real, sustainable bandwidth is available to provide a transfer rate at least equal to 150% of the assumed raw data rate. This is in order to provide enough overhead for fluctuations or to catch up after any sustained network outage.
- Assure network reliability sufficient that network downtime does not lead to the Online buffer disks becoming full.

6.2.2 Software Framework

The software framework must provide a means by which modular code can be written by dispersed developers with diverse abilities. In particular the software framework is required to:

- Be usable in both an online and offline context.
- Have an established community of experts that support it.
- Restrict the amount of software available only in binary form.
- Provide a detector description (geometry) and interface to required simulation packages (*eg.* Geant4, GENIE).
- Support creation of histograms and other statistical measures.
- Provide a user interface for configuration and running.
- Be documented well enough for an accomplished programmer to understand the design, fix bugs and make improvements and for a beginning user to make contributions.

6.2.3 CPU and Data Storage

Sufficient CPU is needed for simulation and reconstruction of raw data. This has been estimated by scaling [2] up from the SK experience. See the reference for assumptions and details of the estimation. The conclusions there are given as a range of the CPU needed and the most conservative values are taken here:

Sample	CPU-years
Data	263
Cosmic MC	109
Neutrino MC	47
Sum	419

This estimate is for the initial year of running and for a single processing pass. What follows is the required inflation when these two issues are included. Each of the three samples are considered in turn.

Data Neutrino data is three orders of magnitude down from cosmic μ data in number alone. These events tend have fewer hit PMTs as well so are faster to reconstruct. It is expected that the full data set will require more than one processing pass in the beginning as the cosmic-μ fitter is refined or mistakes are found but at some point the fitter will stabilize and no further reprocessing will be required. It is impossible to know when stability is reached and so an ad-hoc estimate is made: the full data set of any given year will be processed twice. This requires a stead state of 2×263 CPU-years available each year devoted to processing the data. The neutrino data will likely be reprocessed many times but this does not drive the estimate.

Cosmic MC This sample is not expected require to be reoccurring processing. It is expected that mistakes will be found in initial runs and subsequent runs will be needed. The target sample size of 100 kton-year should be ample and thus does not need to grow with detector run time. The estimate taken is that a new sample of the fixed size will be generated each year. This leads to a steady state requirement of 109 CPU-years available each year for cosmic MC.

Neutrino MC It is assumed that this sample will be regenerated twice per year. Assuming a sample size of 100× that of the current neutrino data set, the requirement for producing this sample grows each year and is $2 \times N_{year} * 47$ CPU-years for each year N_{year}.

These CPU requirements as a function of number of years running are summarized:

Sample	CPU-years
Data	2×263
Cosmic MC	109
Neutrino MC	$2 \times 47 \times N_{year}$
Sum	$635 + 94 \times N_{year}$

The data storage requirements include both reliable archival and fast, random access working storage. Archival storage must retain all raw data and the results of simulation and reconstruction. The requirement on reliability is taken to be that no more than 0.1% of the data is irretrievably lost. To reduce wear and tear on archival storage and to provide fast access to data for reprocess it is required that all data be kept on disk in the computing center.

The fundamental data rate assumption leads to a need to archive $\sim$ 90 TB/year of raw data assuming three 100 kton modules. This is a reoccurring requirement.

Simulation results should also be archived at least as long as they have not been superseded by novel runs. The storage needs vary depending on how much extra MC "truth" information is retained. It will be dominated by the simulated cosmic-μ sample and is taken to be double the size of one year of equivalent data in a single 100 kton detector or 60 TB.

To put these CPU and storage requirements numbers in perspective they are compared to an existing installation. Recent "disk heavy" nodes have been purchased by LBNE WCD project for installation in to the BNL RHIC/ATLAS Computing Facility (RACF). They contain 16 hyperthreaded 2.7 GHz cores (eight physical), 24 GB RAM and $\sim$5 TB of disk space usable for data files. The CPU requirements here would dictate the use of an initial 46 such nodes and an additional 6 nodes for each year of data taking. The total initial disk space would be 230 TB with an additional 30 TB per year. The initial cost would be \$250K and \$32K/year. Of course, it must be stated that it is expected that cost for equivalent computing will be vastly reduced by the time data taking starts.

6.2.4 Batch Processing

A batch processing system is required to support large scale production running at the main computing center. The infrastructure group must work with the Offline Production group and with other centers to integrate resources and improve efficiency. The group should investigate if exploiting Grid technology or similar is appropriate. Results of production running are to be archived at BNL and copies sent to other institutions that desire them.

6.2.5 Collaborative Applications

Various applications that support collaboration within the computing group and the collaboration as a whole are required. These application must provide:

- Web presence.
- Written communication and archival of messages.
- Version control system for software and documents.
- Issue (bug) tracking and software validation.
- Electronic log book for commissioning and day-to-day shift work.
- Data migration and catalog system.

7 Interfaces

The requirements on the interfaces between members of the Computing group and between the Computing group and the rest of the project are given in this section. Each interface is to be implemented by a joint task force.

7.1 Intra-group

The sub-groups in the Computing group are expected to work together in the following manners.

- Online and Infrastructure must assure that raw data and any needed slow control information must be safely archived in the computing center.
- Infrastructure must supply and support the software framework for use by Online and Offline groups.
- Networking must provide adequate connectivity largely driven by data Online will provide to Infrastructure.
- Production group must work with infrastructure in setting up the mechanisms of production running.

7.2 Inter-group

The Computing group must interface with the rest of the project in the following manners:

- DAQ/Electronics supplies raw data to the Online group.
- Calibration group supplies constants for use by Offline and stored in databases managed by Infrastructure.
- Infrastructure group must accept input from the entire collaboration on what collaboration applications are needed.
- The Production and Infrastructure groups must assure data, simulation and reconstruction results are available to the collaboration.

References

[1] Estimation by D. Jaffe.

[2] D. Jaffe, DocDB #506.

[3] SuperK Detector Simulation. and Reconstructon Benchmarks, Ed Kearns, DocDB#248.

	LBNE Water Cherenkov Detector **BASIS of ESTIMATE FORM (BoE)**	**Date of Estimate:** **Revision #:** **Prepared By: T. Russo/R. Sharma** **Approved By:** **Level 2 Manager**

WBS Number: **130.04.08.01**	**WBS Title:** **Management**

WBS Dictionary:

This element includes the general management of the Integration and Installation section and all activities related to the management and administration to ensure that construction activities meet the project goals and that work is done in accordance with DOE Cost, Schedule and Technical Guidelines.

Cost Type **(check all that apply):** ___ EDIA Material _x_ EDIA Labor ___ MFG Material ___ MFG Labor	**Costing Method** **(check all that apply):** ___ Engineering Judgment ___ Physicist Estimate _x_ Level of Effort ___ Vendor Quote (attached) ___ Catalog Price (specify) ___ Prior purchase _x_ Prior experience ___ Parametric Estimate ___ Other- Description:_____

Attach Relevant Documents (including but not limited to):

M&S Contingency (%)**: 0**	**Labor Contingency** (%)**: 20%**

Basis of Estimate
Details of Estimate: The proposed management effort and M&S over the four phases of the project are contained in the table below: Management budget overview The duties and responsibilities of the Integration Installation working group are shown below along with estimated effort and M&S costs. The typical industry management cost compared to the total project cost is between ten and fifteen percent. Recent Brookhaven National Lab projects (such as NSLSII and EBIS) fall into this range. The management costs described here are to store, inventory, coordinate, and schedule the installation of the major components of the WCD are reasonable. Installation subsystem managers The Installation Integration subsystem manager is responsible for the design, procurement, production, testing, delivery, and implementation of the complete plan for installation of the WCD systems. Also, management is responsible to maintain high quality assurance, ES&H, and safety systems. The responsibilities of the Integration and Installation subsystem and staff are spread over the four phases of project construction as follows. Conceptual, Preliminary and Final Design. 1. Organize, and direct the day to day activities of the Installation Integration working group necessary to develop an installation plan that achieves LBNE technical, cost and schedule objectives. 2. Develop the performance requirements that meet project objectives. 3. Assemble and edit the Installation Integration and Safety chapter of the Conceptual Design Report and the Technical Design Report. 4. Assist the project engineer to schedule and follow up on internal technical reviews including conceptual, preliminary and final design reviews. Schedule technical reviews as needed. 5. Coordinate the activities of the level 4 task groups. 6. Interface with vendors. 7. Work with the project engineers to prepare the cost, schedule and other documents needed for Critical Decision Reviews 1, 2 and 3. 8. Prepare progress, cost and schedule reports as required. 9. Oversee the development and implementation of a Quality Assurance Plan. 10. Oversee the development and implementation of an Environment, Safety and Health Plan. 11. Participate in the change control process and allocation of contingency funds Installation 1. Organize, and direct the day to day activities of the Installation Integration working group necessary to safely and efficiently install WCD components in a manner such to meet LBNE technical, cost and schedule objectives. 2. Work with the project engineer to organize, schedule and follow up on internal production readiness,

operation readiness reviews. Organize special manager's design reviews as needed.

3. Coordinate the activities of the level 4 task groups that participate in testing and quality assurance.
4. Continue to interface with the vendors to assure schedule and quality goals are met.
5. Work with the project engineers to track costs and schedule for the procurement and production of the major contracts for labor and materials related to installation.
6. Maintain system configuration documents including the Performance Requirements and Technical Specifications.
7. Prepare progress, cost and schedule reports as required.
8. Oversee the implementation of the QA, ES&H, and Safety plans.
9. Participate in the change control process and allocation of contingency funds

Quality Assurance Engineer

The Quality Assurance Engineer is responsible for the development, implementation and oversight of the Quality Assurance Program. The Quality Assurance Engineer is a trained quality professional who provides independent oversight every aspect of quality from the establishment of Integration requirements to the installation of components. The QA engineer reports directly to Installation Integration subsystem manager.

1. Develop a comprehensive ES&H program that begins with the conceptual design and ends with the complete installation.
2. Participate actively in the design process including all technical reviews.
3. Assist the subsystem managers in developing the organization, communication and interface links among the institutions participating in the development and implantation of the global requirements and installation plan.
4. Perform QA audits of all parts receiving and inspection, subcomponent production, testing and quality control.

Administration

The administrative assistant provides clerical and administrative support for the Installation Integration management team. The effort changes as the project develops.

1. Make travel arrangements.
2. Assemble and edit progress reports.
3. Develop and maintain a wiki and website for communication within the working group.
4. File documentation and communications.

Travel and M&S

The largest share of the Integration Installation management M&S budget will be devoted to travel related to the oversight of working group activities.

Contingency & Method:

Assumptions:

Integration of the WCD systems starts with the development of high level requirements. Each WCD system

provides information of top level requirements that become the global requirements document. Detailed specifications for each major system are developed from these requirements. From this document, interfaces can be developed that allow for the seamless integration of subsystems.

Installation of the WCD systems centers on a central facility within 50 miles of the detector. All major components of the WCD systems will be shipped to this warehouse facility and inventoried. Delivery of the components to the DUSEL facility is controlled by the installation subgroup. The coordination of assembly of all of the systems is controlled by the installation group. Experts from each of the WCD systems will still be needed

130.04.08.01 Management

WBS LEVEL 5	ACTIVITY ID	ACTIVITY DESCRIPTION	START DATE	FINISH DATE	DURATION	RESOURCE	HOURS	COST	TOTAL with Escalation
130.04.08.01 Management	IIS0010	Conceptual Design Phase	1/11/2010	5/7/2012	582	Mechanical Engineer P2	1,001	57,947	96,374
						Mechanical Engineer P5	1,001	97,852	162,741
		Conceptual Design Phase Total					2,002	155,799	259,115
	IIS0020	Preliminary Design Phase	6/25/2012	12/13/2013	367	Mechanical Engineer P2	998	57,785	79,905
						Mechanical Engineer P5	998	97,578	134,930
		Preliminary Design Phase Total					1,996	155,363	214,835
	IIS0030	Final Design Phase	12/16/2013	3/6/2015	303	Mechanical Engineer P2	691	39,991	56,972
						Mechanical Engineer P5	891	87,078	124,053
		Final Design Phase Total					1,582	127,068	181,024
	IIS0040	Construction Phase (post CD-3)	3/9/2015	5/25/2022	1873	Mechanical Engineer P2	7,117	412,005	657,586
						Mechanical Engineer P5	4,008	391,804	625,343
		Construction Phase (post CD-3) Total					11,126	803,809	1,282,929
	IIS0050	Installation Planning and Scheduling	1/11/2010	2/8/2012	520	Mechanical Engineer P2	993	57,493	95,481
		Installation Planning and Scheduling Total					993	57,493	95,481
	IIS0060	Review of Rigging and Hoisting Practice	10/20/2015	10/22/2015	3	Mechanical Engineer P2	40	2,315	3,446
						Mechanical Engineer P5	40	3,909	5,820
		Review of Rigging and Hoisting Practices and Moni Total					80	6,224	9,266
	IIS0070	Implementation of Rigging and Hoisting	10/23/2015	5/6/2022	1700	Mechanical Engineer P2	799	46,252	74,389
		Implementation of Rigging and Hoisting Pracedures Total					799	46,252	74,389
130.04.08.01 Management Total							**18,578**	**1,352,008**	**2,117,038**
Grand Total							**18,578**	**1,352,008**	**2,117,038**

	LBNE Water Cherenkov Detector **BASIS of ESTIMATE FORM (BoE)**	**Date of Estimate:** **Revision #:** **Prepared By: T. Russo/R. Sharma** **Approved By:** **Level 2 Manager**

WBS Number: **130.04.08.02**	**WBS Title:** **Integration**

WBS Dictionary:

This element includes the engineering of the Integration to assist experimental subsystems and their managers in developing, defining, and controlling the mechanical systems, electrical systems, experimental assembly, safety systems, and civil construction interface between each subsystem.

Cost Type **(check all that apply):** ___ EDIA Material _x_ EDIA Labor ___ MFG Material ___ MFG Labor	**Costing Method** **(check all that apply):** _x_ Engineering Judgment ___Physicist Estimate _x_ Level of Effort ___ Vendor Quote (attached) ___ Catalog Price (specify) ___ Prior purchase _x_ Prior experience ___ Parametric Estimate ___ Other- Description:_____

Attach Relevant Documents (including but not limited to):

M&S Contingency (%)**: 0**	**Labor Contingency** (%)**: 20**

Basis of Estimate
Details of Estimate: Integration budget overview The duties and responsibilities of the Integration working group are shown below along with estimated effort and M&S costs. The primary tasks within the Integration scope are accomplished by the Senior Mechanical Engineer providing oversight and detailed work of the Mechanical Systems, Electrical Systems, Experimental Assembly, Civil Construction Interface, Engineering Standards, and Quality Assurance Integration. The Sr. Mechanical Engineer is assisted by up to 1 FTE Mechanical Designer and up to 1 FTE Electrical Engineer to perform Integration work detailed below. The FY10 and FY11 Integration work of the Sr. ME and Designer is development of the WCD Global Requirements, DUSEL Interface Requirements and subsequently the WCD Interface Control documentation. This effort spans all the subcategories below during Conceptual Design through early Preliminary Design. Mechanical Systems Integration The primary scope of this element is subsystem mechanical hardware interface coordination and control. This detail work is accomplished with the assistance of Mechanical Designer(s) to compile subsystems component hardware geometry within the experimental complex both above and below ground. Interface boundaries are defined from the Computer Aided Design (CAD) model and the Sr. ME assists the project in the coordination of these interfaces within the subproject, the LBNE project and with DUSEL. These efforts peak during Preliminary Design. Subtasks for the Mechanical Systems Integration include 3-D Interface Controls and Mechanical Services. A 3-D Interface control model is the primary task of the Designer to establish and maintain the Detector complex model with inputs from each of the subsystems groups and DUSEL. Mechanical Services integration consists of the Sr. ME and Designer effort to gather information from all of the subgroup requirements for mechanical services such as plumbing, HVAC, compressed air, etc and supply it to DUSEL. This effort is coincident with the 3-D Interface Controls effort. Electrical Systems Integration The primary scope of this element is to assist in defining all experimental project electrical requirements for the installation and operation of the experiment in the DUSEL complex. This should include both facility (conventional) power and experimental (clean) power along with appropriate electrical ground isolation. Early to mid-Preliminary Design Electrical Engineering work (FY13-FY14) for electrical systems integration requires relatively low LOE to maintain the Detector interface electrical power requirements. Experimental Assembly Integration The primary scope of this element is to assist in the development of an overall experiment integration plan for installation of the Detector at DUSEL. Each subsystem is responsible for meeting the Interface Controls between subsystems, within LBNE and with DUSEL. It is the Integration group that provides the engineering resources (Sr. ME and Designer) needed for planning the experiment assembly/installation.

Civil Construction Interface

This consists of engineering and designer effort to assist subsystems in defining the experimental requirements as they pertain to space and utility interface with civil construction of the facility. They will interact with WCD subsystems and the DUSEL civil group in defining experimental and civil interfaces. They will incorporate as-built civil documentation into 3-D solids models of the WCD project civil complex as required for subsystems design and installation planning. They will incorporate mechanical utilities such as HVAC ducting, plumbing and piping, lighting, AC power distribution, gas and water systems, access shafts and drifts, fire and safety systems, communications and networking, materials handling and overhead cranes into experimental complex documentation.

Engineering Standards, Reviews and Document Control Systems
The scope of this element is to provide for the entire collaboration a common Engineering Design Standard for both mechanical and electrical systems design. The Sr. ME and EE will develop and conduct Engineering Design Reviews of all subsystem WCD project deliverables; and, develop and provide an Engineering Document Control System and database for storage of all related project documents.

Quality Assurance Integration

The QA program will be a global project effort to provide a consistent standard of excellence in the performance of the WCD project subsystems, subgroups, collaborative institutions, and DOE laboratories. The Sr. ME will provide integration support for the global project effort to provide a consistent standard of excellence in the performance of WCD project subsystems, subgroups, collaborative institutions, and DOE laboratories. Elements of the QA program include review and approval of procurement documentation, contractor QA programs, manufacturing plans, installation plans, testing plans, management plans, engineering and controlled documentation, engineering codes and standards, and work control process.

130.04.08.02 Integration

WBS LEVEL 5	ACTIVITY ID	ACTIVITY DESCRIPTION	START DATE	FINISH DATE	DURATION	RESOURCE	HOURS	COST	TOTAL with Escalation
130.04.08.02.01 Mechanical Syst	IIS0080	3-D Interface Control	1/11/2010	6/2/2022	3164	Mechanical Engineer P5	1,297	126,805	198,886
		3-D Interface Control Total					1,297	126,805	198,886
	IIS0090	Mechanical Services	1/11/2010	6/2/2022	3164	Mechanical Engineer P2	1,297	75,093	117,779
		Mechanical Services Total					1,297	75,093	117,779
130.04.08.02.01 Mechanical Systems Integration Total							**2,594**	**201,899**	**316,665**
130.04.08.02.02 Electrical Syster	IIS0100	Conventional Power	1/11/2010	6/2/2022	3164	Electrical Engineer P2	1,297	75,097	117,785
		Conventional Power Total					1,297	75,097	117,785
	IIS0110	Clean Power & Grounding	1/11/2010	6/2/2022	3164	Electrical Engineer P2	1,297	75,097	117,785
		Clean Power & Grounding Total					1,297	75,097	117,785
	IIS0120	UPS and Emergency Power	1/11/2010	6/2/2022	3164	Electrical Engineer P2	1,297	75,097	117,785
		UPS and Emergency Power Total					1,297	75,097	117,785
	IIS0130	Tray Routing	1/11/2010	6/2/2022	3164	Electrical Engineer P2	1,297	75,097	117,785
		Tray Routing Total					1,297	75,097	117,785
130.04.08.02.02 Electrical Systems Integration Total							**5,189**	**300,389**	**471,141**
130.04.08.02.03 Experimental As	IIS0140	Requirements	1/11/2010	7/31/2013	889	Mechanical Engineer P5	196	19,118	30,135
		Requirements Total					196	19,118	30,135
	IIS0150	Interface Control Documents	1/11/2010	7/31/2013	889	Mechanical Engineer P5	400	39,105	61,639
		Interface Control Documents Total					400	39,105	61,639
	IIS0170	Scheduling	1/11/2010	12/23/2014	1237	Mechanical Engineer P2	804	46,544	71,229
		Scheduling Total					804	46,544	71,229
	IIS0180	Subgroup Coordination	1/11/2010	6/2/2022	3164	Mechanical Engineer P2	1,297	75,093	117,779
		Subgroup Coordination Total					1,297	75,093	117,779
130.04.08.02.03 Experimental Assembly Integration Total							**2,697**	**179,860**	**280,783**
130.04.08.02.04 Establish Engine	IIS0190	Engineering Design Standards	1/11/2010	7/31/2013	889	Mechanical Engineer P5	800	78,210	123,279
		Engineering Design Standards Total					800	78,210	123,279

130.04.08.02.04 Establish Engine	IIS0190								
	IIS0200	Engineering Design Reviews	1/11/2010	10/21/2014	1195	Mechanical Engineer P5	1,004	98,121	150,439
		Engineering Design Reviews Total					1,004	98,121	150,439
	IIS0210	Engineering Document Control System	1/11/2010	6/2/2022	3164	Mechanical Engineer P5	759	74,227	116,421
		Engineering Document Control System Total					759	74,227	116,421
	IIS0220	Engineering Change Control Process	1/11/2010	6/2/2022	3164	Mechanical Engineer P5	759	74,227	116,421
		Engineering Change Control Process Total					759	74,227	116,421
	IIS0230	Develop Work Controls System Review	1/11/2010	10/19/2015	1442	Mechanical Engineer P5	894	87,392	132,767
		Develop Work Controls System Review Process Total					894	87,392	132,767
	IIS0240	Develop Rigging and Hoisting Practices	1/11/2010	10/19/2015	1442	Mechanical Engineer P5	894	87,392	132,767
		Develop Rigging and Hoisting Practices Total					894	87,392	132,767
130.04.08.02.04 Establish Engineering Standards, Reviews and Document Total							**5,111**	**499,571**	**772,095**
Grand Total							**15,591**	**1,181,719**	**1,840,684**

LBNE	**LBNE Water Cherenkov Detector** **BASIS of ESTIMATE FORM (BoE)**	**Date of Estimate: September 20,2011** **Revision #: 0** **Prepared By: R. Sharma** **Approved By:** **Level 2 Manager**

WBS Number:	**WBS Title:**
130.04.08.03	**Installation Planning & Support**

WBS Dictionary:

This element includes the planning, engineering, space, and material resources associated with the installation of the WCD major systems at Lead, SD. It ensures that construction activities meet the project goals and that work is done in accordance with DOE Cost, Schedule and Technical Guidelines.

Cost Type **(check all that apply):**	**Costing Method** **(check all that apply):**
___ EDIA Material ___ EDIA Labor _x_ MFG Material _x_ MFG Labor	_x_ Engineering Judgment ___Physicist Estimate ___ Level of Effort ___ Vendor Quote (attached) ___ Catalog Price (specify) ___ Prior purchase _x_ Prior experience ___ Parametric Estimate _x_ Other- Description: Real estate survey

Attach Relevant Documents (including but not limited to):

M&S Contingency (%)**: 44**	**Labor Contingency** (%)**: 56**

Basis of Estimate
Details of Estimate: Installation budget overview The duties and responsibilities of the Installation working group are shown below along with estimated labor and M&S costs. Installation of a detector the size and scope of the WCD requires significant effort. This effort is in capturing and integrating all of the subsystem and DUSEL requirements, developing a plan, and carrying it out accurately, safely and efficiently. The scale of this project is to manage over 100 contract laborers, install utilities infrastructure, magnetic compensation system, water systems, photon detector system, computing, and calibration equipment. Facilities need to be secured in SD to receive, store, and inventory all materials and hardware needed for installation of the WCD components. In addition, the coordination of the hoist to optimize the construction schedule is needed systems such as the vessel, liner, mast climbers as well as all the subsystems mentioned above. Installation Engineers and Designers The installation plan will be based on requirements developed from the integration subgroup. These activities include establishing the requirements for the surface assembly buildings as well as in the underground caverns and rooms at DUSEL. It includes all technical, trades, supervisory, and engineering labor required to install and test the detector subsystems. It does NOT include the subsystems experts, physicists and engineering supervision from the subsystems supporting these activities. The hours shown are the expected level of effort needed to develop a system of this size and scope. The hours are derived from similar experiments. The hours include the effort to go from conceptual, to preliminary, to final design and installation. Material Warehouse - a single focal point of delivery of all WCD systems will be within 50 miles of Lead, preferably near Rapid City. Each of the subsystems can ship their materials to this warehouse to be inventoried, stored, and periodically tested if needed. All subsystem components can be coordinated for delivery to the DUSEL facility from this location. A survey conducted by Xinhua Bai (at SDSMT) for local warehouse rates generated a range of lease rates. Also, calls were placed to the Rapid City Chamber of Commerce for comparison. A web search generated additional information on lease rates. For the purposes of this estimate, it was determined to use $5 per SF/yr. It is also estimated to need between 100000 and 250000 SF depending on the packing factor of the PIU's. It is also expected to house water system components, computing, electronics and calibration systems. Just-in-time delivery would not work very well from long distances due to possible interruptions of the supply chain. Over 50 people will be working on installation at any given time and a reliable supply chain of parts must be established to feed the standing army parts. Only one facility of this size in the entire state of SD could be located. Since this facility might not be available when needed, it was determined that several smaller warehouses could be used. The warehouse will be needed starting in FY14. Electrical distribution system - The electrical distribution system for the WCD is derived from the DUSEL facility. DUSEL's responsibility is to supply power from a 12kV/480V step down transformer. All utility

power for a single WCD will be developed from this point. The total power for detector is on the order of 2.5MVA. It is expected that a skilled electrical power engineer will be needed to supply appropriate power to the various subsystems according to need such as peak power demands, noise isolation, tray routing issues, and grounding. The expected level of effort for a WCD engineer will be to establish the subsystem requirements and generate the necessary SOW's for a conceptual design, preliminary design, and final design. A contract will be written to procure the necessary parts such as cabling, switch gear, conduit, and tray. The cost numbers are similar to a recent experiment of similar power (EBIS). It is thought that the contract will be between 5% and 10% of the total cost. The electrical engineer will provide expertise throughout installation.

Underground labor - The installation of the PIUs will take place after the liner is mounted to the interior of the vessel. The first PIUs to be installed will be under the deck after it is built and hoisted 10 feet above the floor. The deck will then be fully raised into position. Next, installation platforms will be installed and the PIUs will be deployed on set of 2 parallel cables. These steel cables will be tied to ring truss on the bottom as well as Ring truss on the deck. Vessel is divided into 6 sectors and floor PMT installation takes place simultaneously with wall PMTs. Detailed installation procedure can be found in CDR. And finally light barrier and Light collector installation will take place. Finally, miscellaneous PIUs will be installed around the deck annulus. These final PIUs complete the array as the deck is prepared to be sealed above the water line. It is estimated that 40 workers will be needed for the PIU installation effort for two shifts per day for 352 working days. These laborers will also used to install other subsystems such as electronics and calibration. The table of SD labor rates was used to develop this estimate.

Temporary fire suppression system - A huge potential fire load exists prior to filling the vessel with water. The PMT cables and vessel liner must be untreated to be compatible with the ultra pure water. It is possible that a temporary fire suppression system should be installed that is similar to the ones that have been deployed at other facilities (NOVA FNAL). This system will need to be relocated and put into final position when detector construction is complete.

Travel - Significant travel will be needed during the Installation phase of the project. It is possible that a change of station will be issued for engineers to save on travel costs.

Warehouse labor - the surface warehouse(s) must have a staff to receive, inventory, and ship WCD materials. It is estimated that 3 people are needed; 1 supervisor and 2 workers. Rates for this are derived from the table of SD labor rates.

Contingency & Method:

Assumptions:

Sufficient warehouse and labor force can be established in Lead to suit the needs of the installation group. The parts can be delivered as to not jeopardize the efficiency of the standing army.

Comments: See also cost spreadsheets by fiscal year.

Assumptions/Interfaces

Constraints

Comments:

Linear Wall PIU

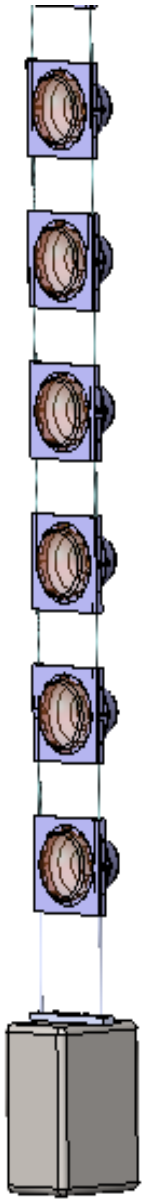

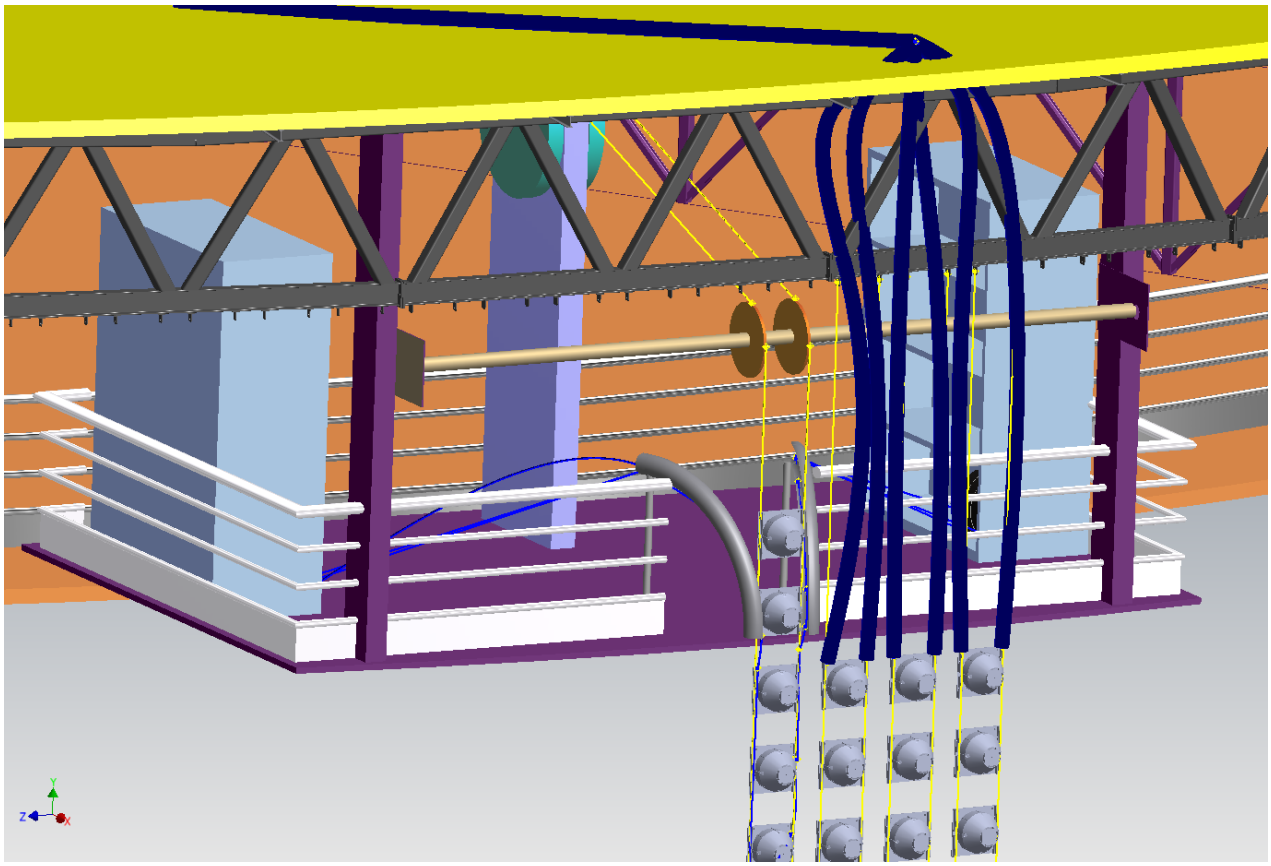

How PMTs will be deployed:

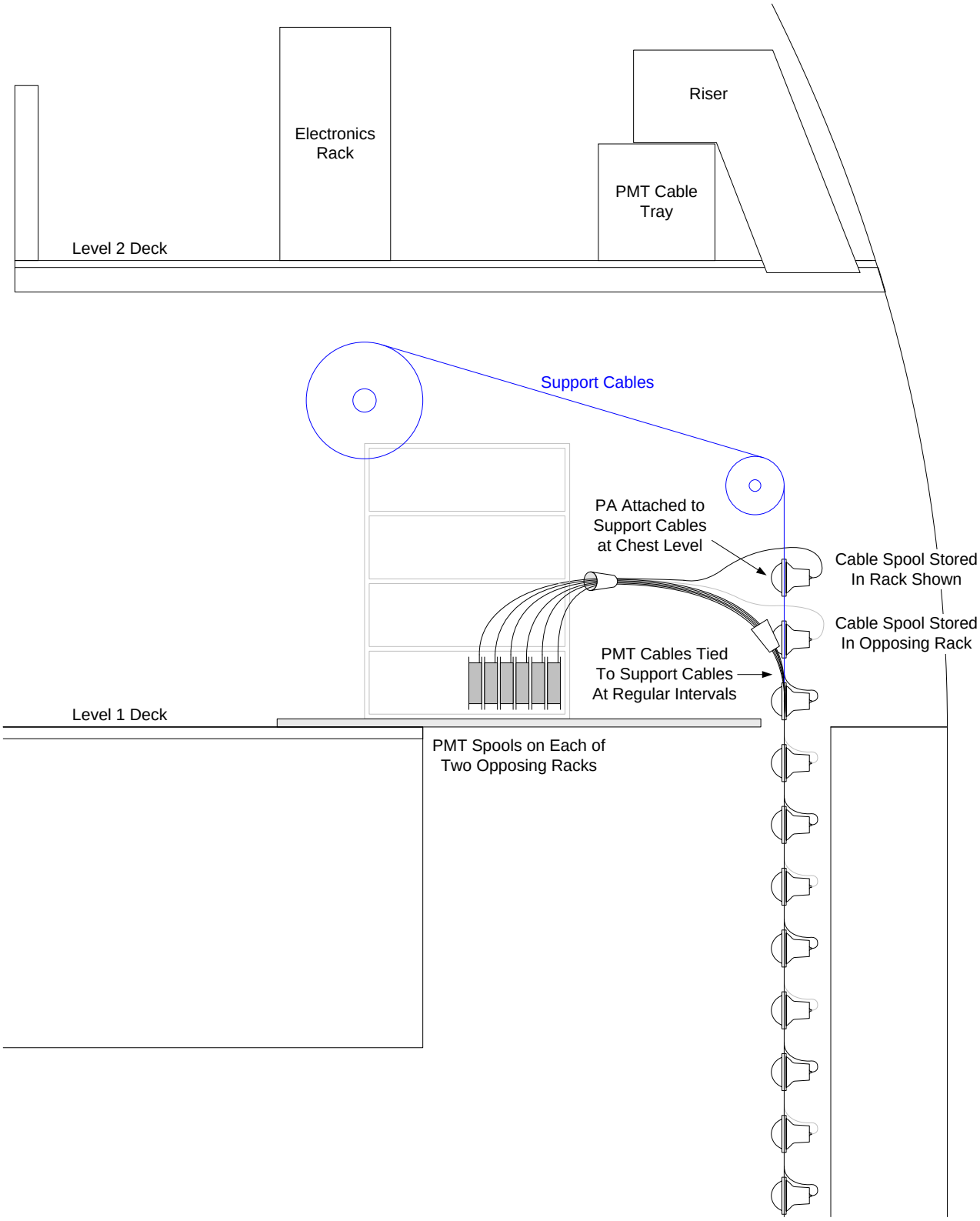

Floor PIUs

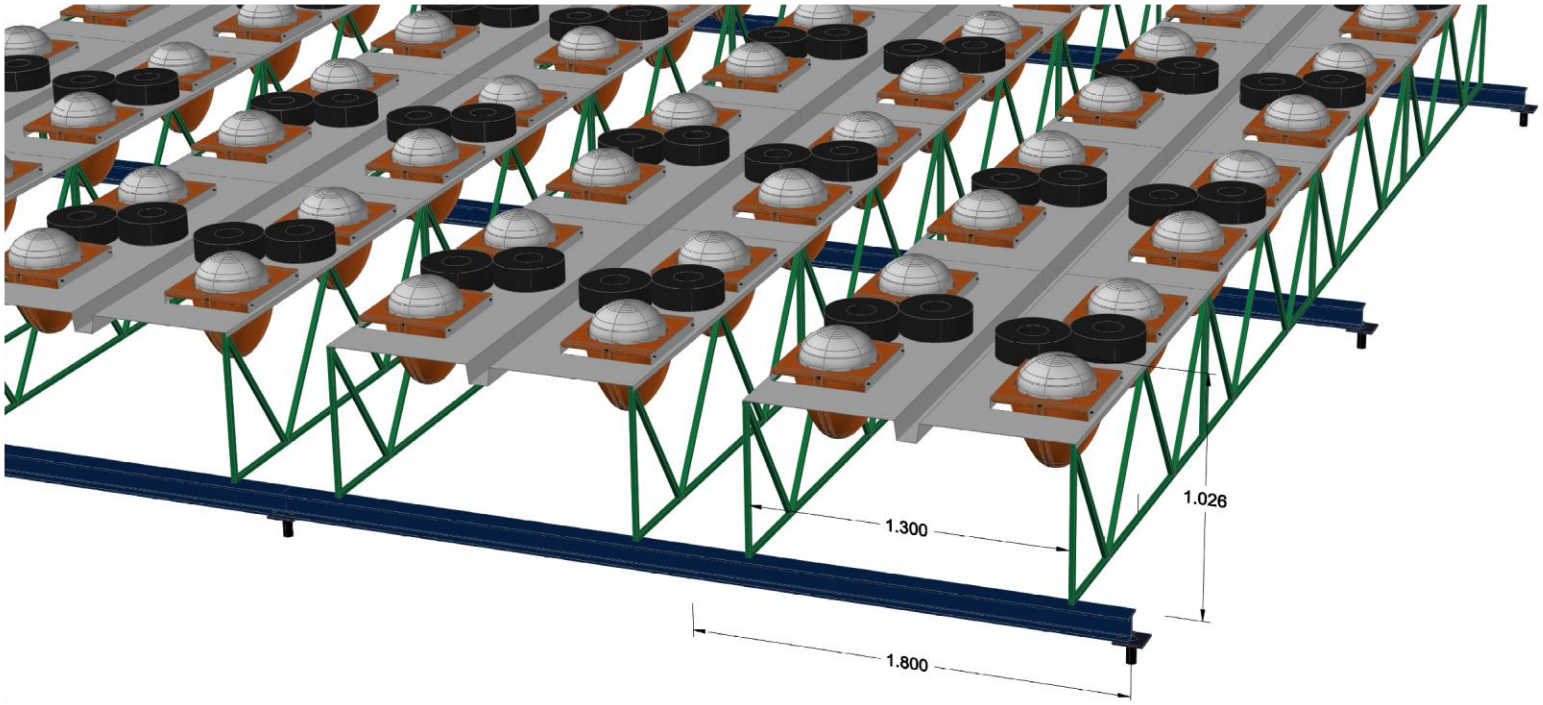

130.04.08.03 Installation Planning & Support

WBS LEVEL 5	ACTIVITY ID	ACTIVITY DESCRIPTION	START DATE	FINISH DATE	DURATION	RESOURCE	HOURS	COST	TOTAL with Escalation
130.04.08.03.01 Site Prep	IIS0250	Secure and Outfit PA Warehouse	4/15/2016	9/27/2016	118	BNL M&S CS Special Procurement		100,000	133,547
		Secure and Outfit PA Warehouse Total						100,000	133,547
	IIS0251	Secure and Outfit PA Warehouse	4/15/2016	9/27/2016	118	Mechanical Engineer P2	520	30,123	44,847
		Secure and Outfit PA Warehouse Total					520	30,123	44,847
	IIS0260	Setup Homestake Storage	6/5/2018	7/26/2018	38	BNL M&S CS Special Procurement		50,000	70,426
						Mechanical Engineer P2	160	9,261	14,542
		Setup Homestake Storage Total					160	59,261	84,968
	IIS0270	Setup Lease for Transportation (with tr	6/5/2018	8/23/2018	58	Administrative Support A1	40	1,307	2,052
						Mechanical Engineer P2	20	1,142	1,793
		Setup Lease for Transportation (with trucking com Total					60	2,448	3,844
	IIS0275	PA Transportation Support	2/19/2020	3/4/2022	532	Mechanical Engineer P2	559	32,336	54,872
		PA Transportation Support Total					559	32,336	54,872
	IIS0280	PA Transportation	2/19/2020	3/4/2022	532	BNL M&S CS Special Procurement		500,000	760,980
		PA Transportation Total						500,000	760,980
	IIS0290	Identify and Procure General Tools and	9/28/2016	4/11/2017	140	Mechanical Engineer P2	260	15,074	23,029
		Identify and Procure General Tools and Equipment Total					260	15,074	23,029
	IIS0300	Replacement of missing tools/Procuren	4/12/2017	1/11/2022	1240	Mechanical Engineer P2	260	15,074	24,585
		Replacement of missing tools/Procurement of addit Total					260	15,074	24,585
	IIS0310	Setup the Inventory Management Syste	4/18/2016	5/27/2016	30	Mechanical Engineer P2	130	7,520	11,195
		Setup the Inventory Management System for Warehou Total					130	7,520	11,195
	IIS0320	Maintainance of Inventory Managemer	5/30/2016	5/16/2022	1556	Mechanical Engineer P2	124	7,206	11,676
		Maintainance of Inventory Management SW Total					124	7,206	11,676
	IIS0330	PA Warehouse Lease	12/28/2015	7/8/2021	1442	BNL M&S CS Special Procurement		3,444,001	4,897,454
		PA Warehouse Lease Total						3,444,001	4,897,454
	IIS0340	Setup Office Space on Surface	3/13/2018	5/7/2018	40	BNL M&S CS Special Procurement		50,000	70,426
		Setup Office Space on Surface Total						50,000	70,426

	IIS0340								
	IIS0350	Implement Work Controls System Revie	4/15/2016	10/25/2021	1442	Mechanical Engineer P2	1,038	60,101	96,452
		Implement Work Controls System Review Process Total					1,038	60,101	96,452
	IIS0360	Decommission Warehouse	4/15/2021	7/8/2021	60	Administrative Support A1	80	2,605	4,432
						Mechanical Engineer P2	40	2,327	3,958
		Decommission Warehouse Total					120	4,932	8,390
130.04.08.03.01 Site Prep Total							**3,232**	**4,328,076**	**6,226,266**
130.04.08.03.02 Detector Compo	IIS0365	Deck PIU's, Light Collectors and Light Ba	4/14/2020	7/14/2020	65	Mechanical Engineer P2	960	55,574	92,044
		Deck PIU's, Light Collectors and Light Barriers , Total					960	55,574	92,044
	IIS0370	Deck PIU's, Light Collectors and Light Ba	4/14/2020	7/14/2020	65	BNL M&S CS Special Procurement		576,800	856,874
		Deck PIU's, Light Collectors and Light Barriers , Total						576,800	856,874
	IIS0380	Install boxing rings	8/18/2020	9/1/2020	10	Mechanical Engineer P2	130	7,525	12,464
		Install boxing rings Total					130	7,525	12,464
	IIS0385	Install Wall PMT's (Sector 1 - 3) Support	9/1/2020	10/20/2020	35	Mechanical Engineer P2	1,665	96,380	161,170
		Install Wall PMT's (Sector 1 - 3) Support Total					1,665	96,380	161,170
	IIS0390	Install Wall PMT's (Sector 1)	9/1/2020	10/20/2020	35	BNL M&S CS Special Procurement		340,000	509,961
		Install Wall PMT's (Sector 1) Total						340,000	509,961
	IIS0400	Install Wall PMT's (Sector 2)	9/1/2020	10/20/2020	35	BNL M&S CS Special Procurement		340,000	509,961
		Install Wall PMT's (Sector 2) Total						340,000	509,961
	IIS0410	Install Wall PMT's (Sector 3)	9/1/2020	10/20/2020	35	BNL M&S CS Special Procurement		340,000	509,961
		Install Wall PMT's (Sector 3) Total						340,000	509,961
	IIS0415	Install Wall PMT's (Sector 4-6) Support	10/20/2020	12/8/2020	35	Mechanical Engineer P2	1,665	96,380	163,945
		Install Wall PMT's (Sector 4-6) Support Total					1,665	96,380	163,945
	IIS0420	Install Wall PMT's (Sector 4)	10/20/2020	12/8/2020	35	BNL M&S CS Special Procurement		340,000	518,725
		Install Wall PMT's (Sector 4) Total						340,000	518,725
	IIS0430	Install Wall PMT's (Sector 5)	10/20/2020	12/8/2020	35	BNL M&S CS Special Procurement		340,000	518,725
		Install Wall PMT's (Sector 5) Total						340,000	518,725
	IIS0440	Install Wall PMT's (Sector 6)	10/20/2020	12/8/2020	35	BNL M&S CS Special Procurement		340,000	518,725
		Install Wall PMT's (Sector 6) Total						340,000	518,725

	IIS0440								
	IIS0448	Install Floor Structure Engineering Supp	8/18/2020	9/15/2020	20	Mechanical Engineer P2	336	19,450	32,214
		Install Floor Structure Engineering Support Total					336	19,450	32,214
	IIS0450	Install Floor Structure	10/14/2020	11/11/2020	20	BNL M&S CS Special Procurement		205,000	312,761
		Install Floor Structure Total						205,000	312,761
	IIS0455	Install Floor PMTs (Sector 1-3) Engineer	11/11/2020	11/23/2020	8	Mechanical Engineer P2	384	22,229	37,812
		Install Floor PMTs (Sector 1-3) Engineering Suppo Total					384	22,229	37,812
	IIS0460	Install Floor PMTs (Sector 1)	11/11/2020	11/23/2020	8	BNL M&S CS Special Procurement		80,000	122,053
		Install Floor PMTs (Sector 1) Total						80,000	122,053
	IIS0470	Install Floor PMTs (Sector 2)	11/11/2020	11/23/2020	8	BNL M&S CS Special Procurement		80,000	122,053
		Install Floor PMTs (Sector 2) Total						80,000	122,053
	IIS0480	Install Floor PMTs (Sector 3)	11/11/2020	11/23/2020	8	BNL M&S CS Special Procurement		80,000	122,053
		Install Floor PMTs (Sector 3) Total						80,000	122,053
	IIS0485	Install Floor PMTs (Sector 4-6) Engineer	12/8/2020	12/18/2020	8	Mechanical Engineer P2	128	7,410	12,604
		Install Floor PMTs (Sector 4-6) Engineering Suppo Total					128	7,410	12,604
	IIS0490	Install Floor PMTs (Sector 4)	12/8/2020	12/18/2020	8	BNL M&S CS Special Procurement		80,000	122,053
		Install Floor PMTs (Sector 4) Total						80,000	122,053
	IIS0500	Install Floor PMTs (Sector 5)	12/8/2020	12/18/2020	8	BNL M&S CS Special Procurement		80,000	122,053
		Install Floor PMTs (Sector 5) Total						80,000	122,053
	IIS0510	Install Floor PMTs (Sector 6)	12/8/2020	12/18/2020	8	BNL M&S CS Special Procurement		80,000	122,053
		Install Floor PMTs (Sector 6) Total						80,000	122,053
	IIS0515	Install Floor Light Collector and Light Ba	11/23/2020	12/9/2020	12	Mechanical Engineer P2	480	27,783	47,261
		Install Floor Light Collector and Light Barriers Total					480	27,783	47,261
	IIS0520	Install Floor Light Collector and Light Ba	11/23/2020	11/27/2020	4	BNL M&S CS Special Procurement		50,000	76,283
		Install Floor Light Collector and Light Barriers Total						50,000	76,283
	IIS0530	Install Floor Light Collector and Light Ba	11/23/2020	11/27/2020	4	BNL M&S CS Special Procurement		50,000	76,283
		Install Floor Light Collector and Light Barriers Total						50,000	76,283
	IIS0540	Install Floor Light Collector and Light Ba	11/23/2020	11/27/2020	4	BNL M&S CS Special Procurement		50,000	76,283

	IIS0540	Install Floor Light Collector and Light Barriers Total					50,000	76,283
	IIS0550	Install Floor Light Collector and Light Ba	12/18/2020	12/24/2020	4	BNL M&S CS Special Procurement	50,000	76,283
		Install Floor Light Collector and Light Barriers Total					50,000	76,283
	IIS0560	Install Floor Light Collector and Light Ba	12/18/2020	12/24/2020	4	BNL M&S CS Special Procurement	50,000	76,283
		Install Floor Light Collector and Light Barriers Total					50,000	76,283
	IIS0570	Install Floor Light Collector and Light Ba	12/18/2020	12/24/2020	4	BNL M&S CS Special Procurement	50,000	76,283
		Install Floor Light Collector and Light Barriers Total					50,000	76,283
	IIS0580	Install Light Collectors and Light Barrier	11/23/2020	12/4/2020	9	BNL M&S CS Special Procurement	15,000	22,885
		Install Light Collectors and Light Barriers on th Total					15,000	22,885
	IIS0590	Install Light Collectors and Light Barrier	11/23/2020	12/4/2020	9	BNL M&S CS Special Procurement	15,000	22,885
		Install Light Collectors and Light Barriers on th Total					15,000	22,885
	IIS0600	Install Light Collectors and Light Barrier	11/23/2020	12/4/2020	9	BNL M&S CS Special Procurement	15,000	22,885
		Install Light Collectors and Light Barriers on th Total					15,000	22,885
	IIS0610	Install Light Collectors and Light Barrier	12/18/2020	12/31/2020	9	BNL M&S CS Special Procurement	15,000	22,885
		Install Light Collectors and Light Barriers on th Total					15,000	22,885
	IIS0620	Install Light Collectors and Light Barrier	12/18/2020	12/31/2020	9	BNL M&S CS Special Procurement	15,000	22,885
		Install Light Collectors and Light Barriers on th Total					15,000	22,885
	IIS0630	Install Light Collectors and Light Barrier	12/18/2020	12/31/2020	9	BNL M&S CS Special Procurement	15,000	22,885
		Install Light Collectors and Light Barriers on th Total					15,000	22,885
	IIS0640	Installation of Deck Annular PIUs	12/31/2020	1/21/2021	15	BNL M&S CS Special Procurement	50,000	76,283
		Installation of Deck Annular PIUs Total					50,000	76,283
	IIS0650	Survey PMT's before filling in the Vesse	5/6/2022	5/13/2022	5	BNL M&S CS Special Procurement	50,000	78,341
		Survey PMT's before filling in the Vessel Total					50,000	78,341
	IIS0660	Install all remaining PMTs	4/29/2022	5/6/2022	5	BNL M&S CS Special Procurement	10,000	15,668
		Install all remaining PMTs Total					10,000	15,668
	IIS0670	PMT Cable Hookup to Racks	9/29/2020	5/24/2022	430	BNL M&S CS Special Procurement	600,000	924,818
		PMT Cable Hookup to Racks Total					600,000	924,818
	IIS0680	Survey PMTs after filling in the Vessel	12/9/2021	12/16/2021	5	BNL M&S CS Special Procurement	50,000	78,341

IIS0680	Survey PMTs after filling in the Vessel	12/9/2021	12/16/2021				
	Survey PMTs after filling in the Vessel Total					50,000	78,341
IIS0690	Install Vessel Water Piping (Deck)	2/4/2020	2/18/2020	10	BNL M&S CS Special Procurement	62,500	92,848
	Install Vessel Water Piping (Deck) Total					62,500	92,848
IIS0700	Install Vessel Water Piping (Wall Sector	8/18/2020	8/25/2020	5	BNL M&S CS Special Procurement	7,500	11,142
	Install Vessel Water Piping (Wall Sector 1) Total					7,500	11,142
IIS0710	Install Vessel Water Piping (Wall Sector	8/18/2020	8/25/2020	5	BNL M&S CS Special Procurement	7,500	11,142
	Install Vessel Water Piping (Wall Sector 2) Total					7,500	11,142
IIS0720	Install Vessel Water Piping (Wall Sector	8/25/2020	9/1/2020	5	BNL M&S CS Special Procurement	7,500	11,142
	Install Vessel Water Piping (Wall Sector 3) Total					7,500	11,142
IIS0730	Install Vessel Water Piping (Wall Sector	8/25/2020	9/1/2020	5	BNL M&S CS Special Procurement	7,500	11,142
	Install Vessel Water Piping (Wall Sector 4) Total					7,500	11,142
IIS0740	Install Vessel Water Piping (Wall Sector	9/1/2020	9/8/2020	5	BNL M&S CS Special Procurement	7,500	11,142
	Install Vessel Water Piping (Wall Sector 5) Total					7,500	11,142
IIS0750	Install Vessel Water Piping (Wall Sector	9/1/2020	9/8/2020	5	BNL M&S CS Special Procurement	7,500	11,142
	Install Vessel Water Piping (Wall Sector 6) Total					7,500	11,142
IIS0760	Install Vessel Water Piping (Floor)	8/18/2020	8/25/2020	5	BNL M&S CS Special Procurement	62,500	92,848
	Install Vessel Water Piping (Floor) Total					62,500	92,848
IIS0770	Install Surface Fill System	7/22/2020	10/14/2020	60	BNL M&S CS Special Procurement	50,000	74,570
	Install Surface Fill System Total					50,000	74,570
IIS0780	Install Water Recirculation System	1/21/2021	4/15/2021	60	BNL M&S CS Special Procurement	80,000	122,053
	Install Water Recirculation System Total					80,000	122,053
IIS0790	Install Pumps	1/21/2021	2/18/2021	20	BNL M&S CS Special Procurement	41,000	62,552
	Install Pumps Total					41,000	62,552
IIS0800	Install Sump and Drain	4/15/2021	7/8/2021	60	BNL M&S CS Special Procurement	20,000	30,513
	Install Sump and Drain Total					20,000	30,513
IIS0810	Install Waste System (alternative)	4/15/2021	5/13/2021	20	BNL M&S CS Special Procurement	20,000	30,513
	Install Waste System (alternative) Total					20,000	30,513

IIS0837	Install Fire Protection System Engineeri	10/14/2020	11/25/2020	30	Mechanical Engineer P2	248	14,362	24,430
	Install Fire Protection System Engineering Suppor Total					248	14,362	24,430
IIS0840	Install Fire Protection System	10/14/2020	11/25/2020	30	BNL M&S CS Special Procurement		2,500,000	3,814,155
	Install Fire Protection System Total						2,500,000	3,814,155
IIS0845	Install Electronics Above Ground Engine	3/13/2018	4/5/2018	18	Mechanical Engineer P2	160	9,263	14,545
	Install Electronics Above Ground Engineering Supp Total					160	9,263	14,545
IIS0850	Install Electronics Above Ground	3/13/2018	4/5/2018	18	BNL M&S CS Special Procurement		400,000	563,411
	Install Electronics Above Ground Total						400,000	563,411
IIS0870	Install Detector Electrical Distribution	12/4/2019	3/6/2020	68	BNL M&S CS Special Procurement		500,000	742,782
	Install Detector Electrical Distribution Total						500,000	742,782
IIS0871	Install Detector Electrical Distribution E	12/4/2019	3/6/2020	68	Mechanical Engineer P2	560	32,435	53,721
	Install Detector Electrical Distribution Engineer Total					560	32,435	53,721
IIS0880	Install Clean Ground System	12/4/2019	3/10/2020	70	BNL M&S CS Special Procurement		300,000	445,669
	Install Clean Ground System Total						300,000	445,669
IIS0890	Install Man Lifts (Use CF Power Distribu	12/4/2019	1/14/2020	30	BNL M&S CS Special Procurement		40,000	59,422
	Install Man Lifts (Use CF Power Distribution Syst Total						40,000	59,422
IIS0895	Install Electronics Racks Underground E	8/18/2020	9/29/2020	30	Mechanical Engineer P2	248	14,361	23,786
	Install Electronics Racks Underground Engineering Total					248	14,361	23,786
IIS0900	Install Electronics Racks Underground	8/18/2020	9/29/2020	30	BNL M&S CS Special Procurement		75,000	111,417
	Install Electronics Racks Underground Total						75,000	111,417
IIS0905	Install Electronic Crates in Racks Engine	9/29/2020	11/10/2020	30	Mechanical Engineer P2	248	14,361	24,375
	Install Electronic Crates in Racks Engineering Su Total					248	14,361	24,375
IIS0910	Install Electronic Crates in Racks	9/29/2020	11/10/2020	30	BNL M&S CS Special Procurement		75,000	114,174
	Install Electronic Crates in Racks Total						75,000	114,174
IIS0920	Install Cable Trays	8/18/2020	9/29/2020	30	BNL M&S CS Special Procurement		75,000	111,417
	Install Cable Trays Total						75,000	111,417
IIS0930	Install Ethernet Cables	9/29/2020	10/13/2020	10	BNL M&S CS Special Procurement		30,000	45,469
	Install Ethernet Cables Total						30,000	45,469

IIS0930								
IIS0935	System Check out (PMTs and Electronic	11/10/2020	5/6/2022	388	Mechanical Engineer P2	559	32,343	55,608
	System Check out (PMTs and Electronics) Engineeri Total					559	32,343	55,608
IIS0940	System Check out (PMTs and Electronic	11/10/2020	5/6/2022	388	BNL M&S CS Special Procurement		30,000	46,262
	System Check out (PMTs and Electronics) Total						30,000	46,262
IIS0950	Install Calibration Systems	8/18/2020	11/10/2020	60	BNL M&S CS Special Procurement		200,000	300,788
	Install Calibration Systems Total						200,000	300,788
IIS0955	Clean Vessel Engineering Support	10/14/2020	11/11/2020	20	Mechanical Engineer P2	168	9,725	16,543
	Clean Vessel Engineering Support Total					168	9,725	16,543
IIS0960	Clean Vessel	10/14/2020	11/11/2020	20	BNL M&S CS Special Procurement		30,000	45,770
	Clean Vessel Total						30,000	45,770
IIS0975	Install Computing systems below groun	8/18/2020	10/13/2020	40	Mechanical Engineer P2	326	18,872	31,415
	Install Computing systems below ground Engineerin Total					326	18,872	31,415
IIS0995	Install Control room above ground Engi	3/13/2018	4/5/2018	18	Mechanical Engineer P2	160	9,263	14,545
	Install Control room above ground Engineering Sup Total					160	9,263	14,545
IIS1000	Install Control room above ground	3/13/2018	4/5/2018	18	BNL M&S CS Special Procurement		200,000	281,706
	Install Control room above ground Total						200,000	281,706
IIS1005	Install Gas Blanket System Engineering	1/21/2021	3/18/2021	40	Mechanical Engineer P2	160	9,262	15,755
	Install Gas Blanket System Engineering Support Total					160	9,262	15,755
IIS1010	Install Gas Blanket System	1/21/2021	3/18/2021	40	BNL M&S CS Special Procurement		164,000	250,209
	Install Gas Blanket System Total						164,000	250,209
IIS1020	Gas and Light Barrier (Final seal)	5/6/2022	5/13/2022	5	BNL M&S CS Special Procurement		25,000	39,170
	Gas and Light Barrier (Final seal) Total						25,000	39,170
IIS1025	Seal Ports and Hatches Engineering Sup	5/13/2022	6/10/2022	20	Mechanical Engineer P2	80	4,631	8,090
	Seal Ports and Hatches Engineering Support Total					80	4,631	8,090
IIS1030	Seal Ports and Hatches	5/13/2022	6/10/2022	20	BNL M&S CS Special Procurement		25,000	39,170
	Seal Ports and Hatches Total						25,000	39,170
IIS1035	Fill Vessel	7/8/2021	12/9/2021	110	BNL M&S CS Special Procurement		20,000	30,876

130.04.08.03.02 Detector Compo	IIS1035	Fill Vessel Total						20,000	30,876
	IIS1040	Fill Vessel Engineering Support	7/8/2021	12/9/2021	110	Mechanical Engineer P2	222	12,863	22,140
		Fill Vessel Engineering Support Total					222	12,863	22,140
	IIS0976	Install Computing systems below groun	#N/A	#N/A	#N/A	BNL M&S CS Special Procurement		200,000	298,617
		Install Computing systems below ground Total						200,000	298,617
130.04.08.03.02 Detector Components Installation Total							**8,887**	**10,236,271**	**15,534,171**
Grand Total							**12,120**	**14,564,347**	**21,760,437**

WBS Element: 1.4.8.3.1 Site Preparation

Description	Duration (years)	SqF	Price / sgf / year	Total Cost
Warehouse Lease	5	150000	$5.00	$3,750,000.00

Description	Duration (Days)	No Trips / Day (Standard Load)	Price / trip	Total Cost
PA Transportation	530	2	$500.00	$530,000.00
Total				$4,280,000.00

RapidCity
ECONOMIC DEVELOPMENT

April 14, 2010

Dr. Ron White, VP Research
Dr. Xinhua Bai, Physics Department
South Dakota School of Mines & Technology
501 E. Saint Joseph Street
Rapid City, SD 57701

Via Email: Ronald.White@sdsmt.edu
Xinhua.Bai@sdsmt.edu

Re: Long Baseline Experiment (LBNE) Facility Survey

Drs. White and Bai,

Per your recent request to ascertain the local infrastructure, particularly as it relates to currently available or future capacity to build light industrial space for LBNE PMT assembly production and testing, we are pleased to offer you the following summary.

After surveying the local real estate market in April 2010 for the space requirements you indicated, we have attached a sampling of spaces (Exhibit A) that could work for such a project.

Here is the summary of our findings.

Total Existing Space Available
The total space available in this class is over 425,000 sf. This space is characterized as one building that totals 220,000 SF that can be demised to smaller sizes as the need may require with the remaining space being available in many smaller buildings ranging in size between 10,000 and 30,000 sf.

Total Light Industrial Land Available
Due to the timing of the project, we examined the future capacity of light industrial space within Rapid City and found that there are well over 2,000 acres that are either currently zoned or can be easily zoned (consistent with the City's Master Land Use Plan) as light industrial, wherein space can be built to the required specifications at the time needed. Further, there are several developers who are available to build the required space as needed. Capacity is not an issue of concern. Pricing for any new product will likely be at the higher end of the lease rates summarized below.

Lease Rates

Lease rates for a three year commitment range between $4-11 per square foot triple net, with expenses (utilities, taxes and insurance) running an additional $3-5 per square foot. The variation depends largely on the age, condition, and location of the properties.

Space Type and Specs

All other space requirements relative to forking, high-bay doors and truck access are easily met by the buildings in the survey.

Location

All buildings and land are within 60 miles of DUSEL in Lead and within 5 miles of the South Dakota School of Mines & Technology.

We hope this helps in assessing this opportunity for Rapid City. Please let us know of any other ways we may assist with this project as it moves forward, or if you have any questions.

Kind regards,

Benjamin L. Snow, President
Rapid City Economic Development Partnership
(605) 381-3910
bsnow@rapiddevelopment.com

Exhibit A

WAREHOUSE FOR SALE OR LEASE

108 East Main Rapid City, South Dakota

Sandra Runde, CCIM, SIOR
Commercial Broker
Prudential Kahler REALTORS®
2401 W Main Street, Rapid City SD 57702
605-343-7500 or 800-658-5550

E-mail sandra@kahlerinc.com
www.kahlerinc.com
View commercial listings at
http://www.RapidCityCommercial.com

Prudential

address

108 East Main
Rapid City, SD 57701

tax information

2008 taxes payable in 2009:
$47,713.06
(taxes reflect complete 5 acre parcel)

land information

total of 5 acres

zoning information

east 3 acres (with buildings):
General Commercial
west 2 acres: Light Industrial

present tenants

currently vacant

property description

A total of 29,000 square feet on 5 acres available for sale or lease.

The main building is comprised of 2 contiguous buildings
1) 15,000 square foot office and warehouse built in 1963
2) 10,800 square foot cold storage building built in 1972.

This building contains a carpeted reception area, 12 offices, break room and bathroom. Mezzanine storage is in most of the building. Ceiling heights range from 16 feet to 20 feet high, with multiple overhead doors.

Also on the property is an approximately 4,000 square foot building with one large storage area and 6 separate storage areas with individual overhead doors.

listing prices and options

see "Purchasing Options"

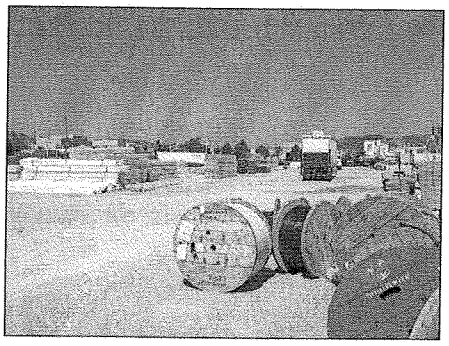

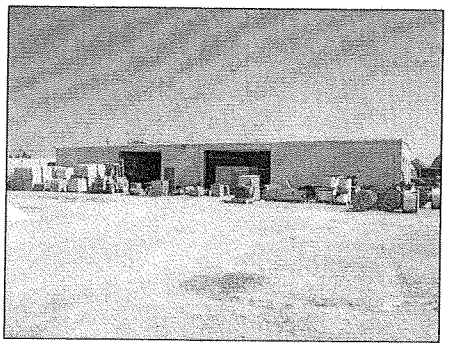

purchasing options

Option 1: Buy entire 5 acre parcel and buildings.

Listing price: **$2,850,000.00**

Option 2: Buy the eastern 3 acres (zoned general commercial) and buildings

Listing price: **$1,895,000.00**

Option 3: Buy the western 2 acres of land (zoned light industrial)

Listing price: **$995,000.00** ($11.40 per square foot)

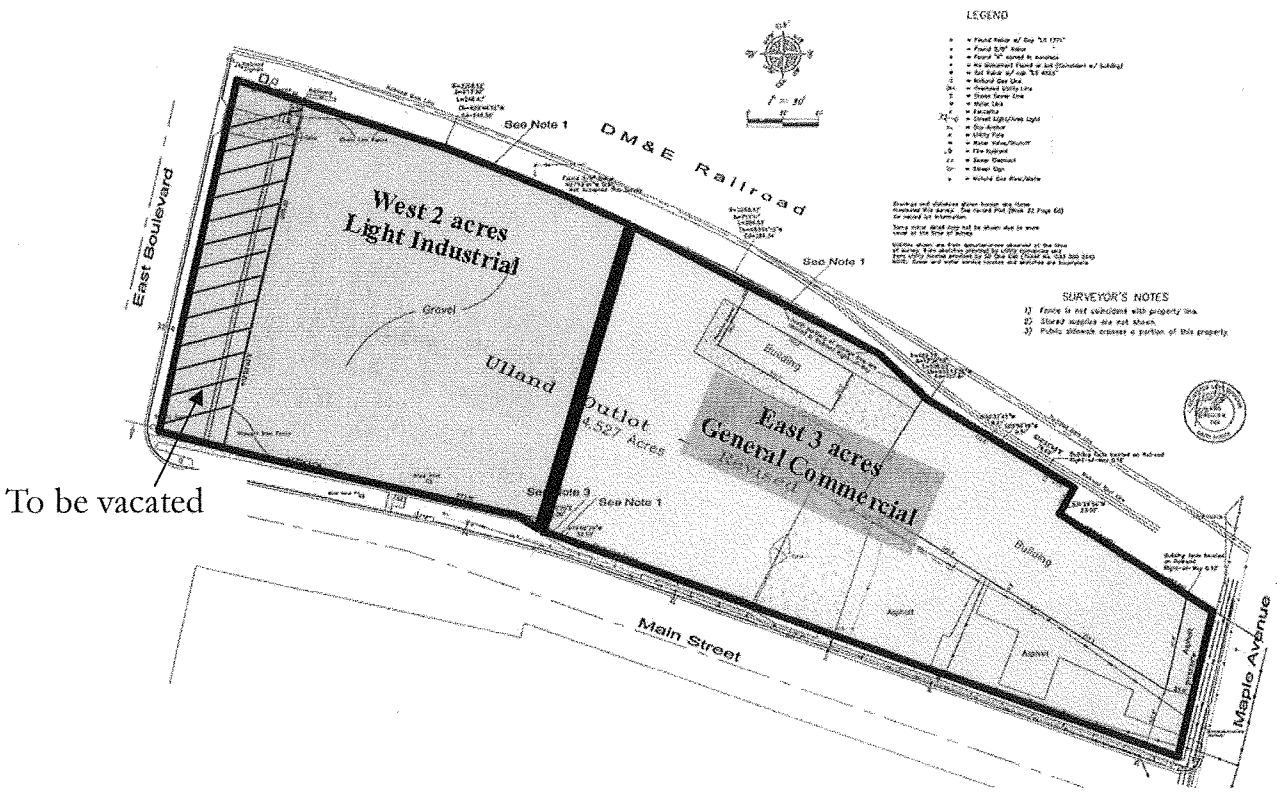

also available FOR LEASE

Option 1: Lease the eastern 3 acres and buildings

Listing price: **$203,000 per year** plus utilities
and triple net expenses

Option 2: Lease the entire 5 acres and buildings

Listing price: **$304,000 per year** plus utilities
and triple net expenses

property features

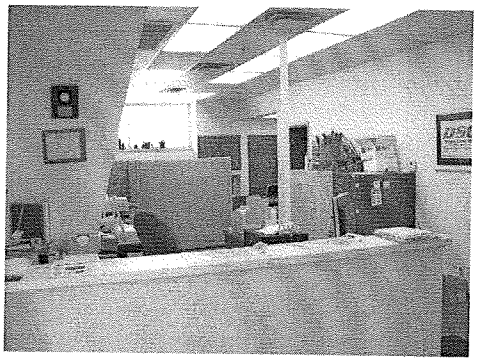

Approximately 29,000 square feet of warehouse and office buildings

Main building contains 2 contiguous buildings:

15,000 square foot office/warehouse (built in 1963)
10,900 square foot cold storage (built in 1972)

- Reception area
- 12 private offices
- Break room
- Handicapped accessible restroom
- Heavy-duty Mezzanine storage in most of building
- 20 foot high ceilings in office/warehouse
- 16 foot high ceilings in cold storage
- 2 dock high 10' x 10' overhead doors in office/warehouse
- 1 16' x 15' high drive-in overhead door in cold storage
- Sprinkler system throughout ("dry" sprinkler system in cold storage)
- Automatic dialing fire system
- 3-phase power
- Shelving stays with the building

Secondary building:

Approximately 4,000 square foot cold storage building

- Concrete floor
- 14 foot high ceiling
- 2 large overhead doors in front – largest is 20' wide x 14' high
- 3 smaller storage units on each side of building with individual overheads
- Electric to unit – no HVAC

Approximately 5 acres of ground

- East 3 acres zoned general commercial
- West 2 acres zoned light industrial – surrounded by chain link fence

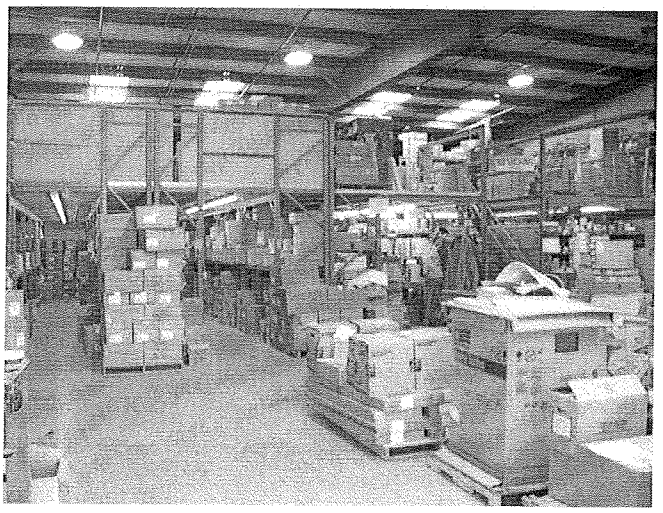

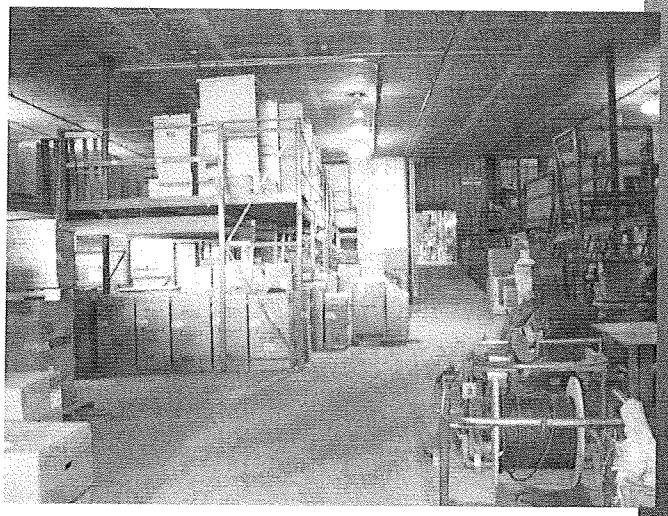

survey

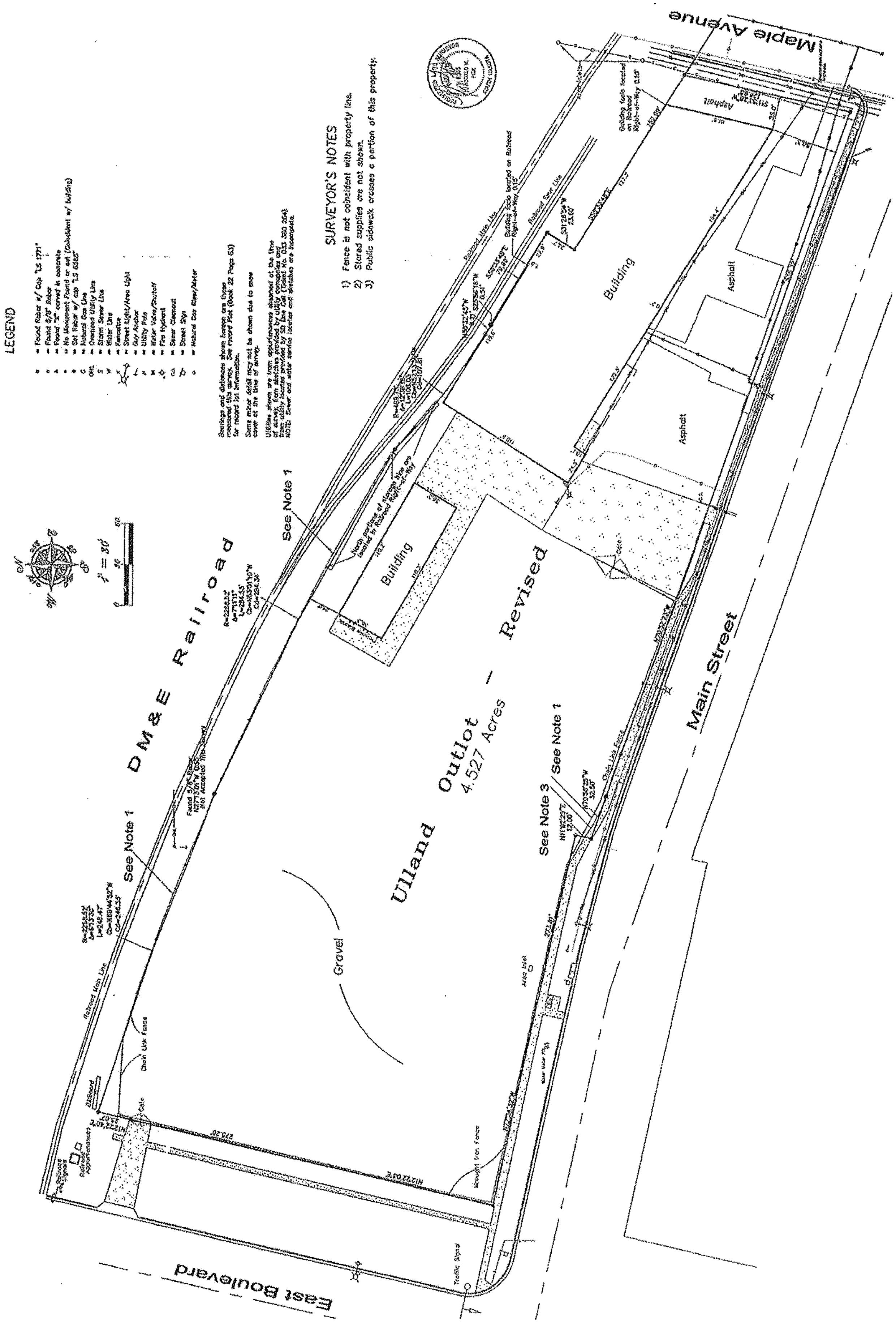

Maple Avenue
DM&E Railroad
Ulland Outlot – Revised
4.527 Acres
Main Street
East Boulevard
LEGEND
SURVEYOR'S NOTES
1) Fence is not coincident with property line.
2) Stored supplies are not shown.
3) Public sidewalk crosses a portion of this property.
1" = 30'
Building
Building
Asphalt
Asphalt
Asphalt
Gravel
See Note 1
See Note 1
See Note 1
See Note 3

close-up aerial

city aerial

Sandra Runde, CCIM, SIOR
Prudential Kahler REALTORS®
2401 W Main Street, Rapid City SD 57702
605-343-7500 or 800-658-5550
E-mail sandra@kahlerinc.com
Visit our website at www.kahlerinc.com

legal notice

This report is only for use in the marketing of this property. It is not an estimate of value and should not be relied upon or used as such. Prudential Kahler REALTORS is representing the seller and acting only in the capacity of a South Dakota Real Estate Broker.

No representations or warranties, expressed or implied, by operation of law or otherwise, are made as to the accuracy or completeness of these materials or any other confidential materials, or as to the condition, quality, or fitness of the property; and neither Seller nor Prudential Kahler REALTORS nor any of their respective directors, officers, employees, stockholders, owners, affiliates, or agents will have any liability to receiving party or any other person resulting from receiving party's or any other person's use of the confidential materials. The property will be sold "as is," "where is," and "with all faults" as of the date of closing. Receiving party will have an opportunity to perform its own examination and inspection of the property and information relating to same and must rely solely on its own independent examination and investigation and not on any information provided by Seller or Prudential Kahler REALTORS. Only those representations and warranties, if any, that are made to receiving party in a sale contract when, as, and if same is executed by receiving party and Seller, and subject to such limitations and restrictions as may be specified therein, will have legal effect. Without limiting the generality of the foregoing, any environmental reports, any structural reports, or any other type or kind of report prepared by third party, if any, included in the confidential materials have not been prepared by Seller and neither Seller nor Prudential Kahler REALTORS makes any representation or warranties with respect to the truth, accuracy, or completeness of same and neither receiving party, nor its representatives nor any other person shall be entitled to rely on such reports or any information contained therein. Without limiting the foregoing, information contained in this Information Packet may vary from the date of publishing. In some instances, more complete or up-to-date information may have become available following the printing of the Information Packet. All sizes and square footage set forth herein are approximations only, based on information heretofore available. Actual sizes and square footage may vary. The reader should seek independent financial, accounting, and legal advice on these reports prior to taking any action.

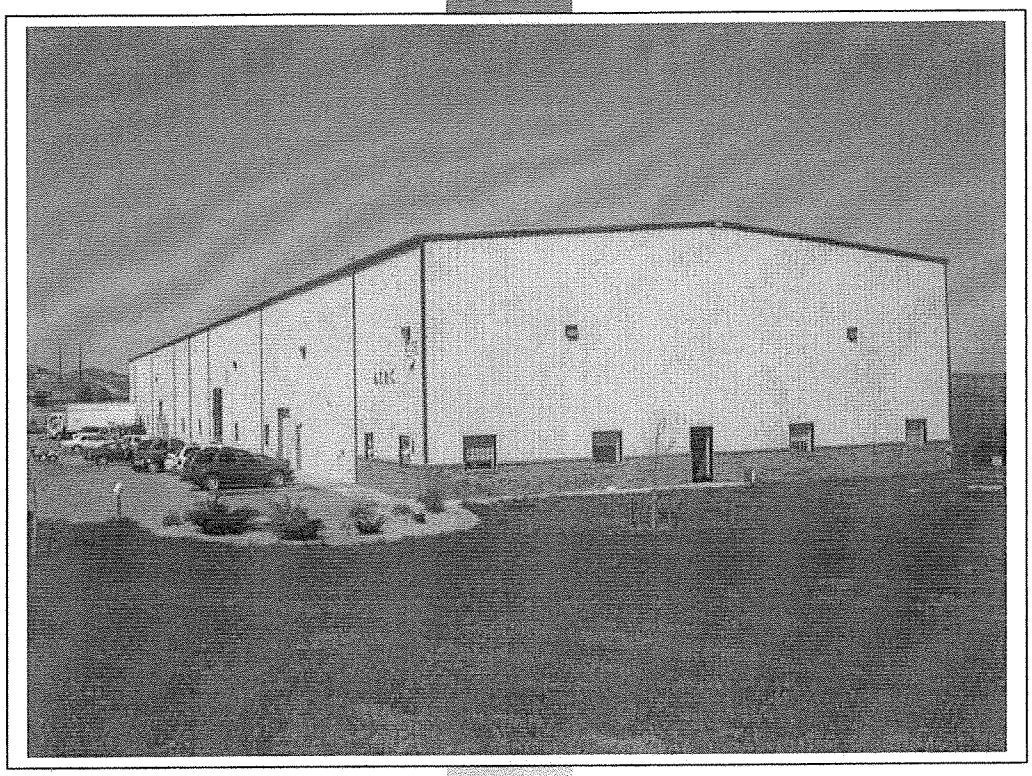

COMMERCIAL BUILDING FOR SALE

American Indian Relief Council Building

2230 Eglin Street

Sandra Runde, CCIM, SIOR
Commercial Broker
Prudential Kahler REALTORS®
2401 W Main Street, Rapid City SD 57702
605-343-7500 or 800-658-5550

E-mail sandra@kahlerinc.com
www.kahlerinc.com
View commercial listings at
www.rapidcitycommercial.com

Prudential

address

2230 Eglin Street
Rapid City, SD 57703

legal description

Lots 1-2, Carefree Subdivision

tax information

Exempt from real estate taxes – non-profit status

listing price

$2,550,000.00

property features

- Built in 2001
- 2.76 acres
- 30,000 square feet
- 3,840 square feet - office space
- 26,120 square feet - warehouse space
- 80' x 375' perimeter
- Fire suppression sprinkler system throughout
- Security system
- Networked
- Outside fenced storage area
- City water
- Private sewer
- Landscaped
- Off-street asphalt parking lot
- Zoned General Commercial

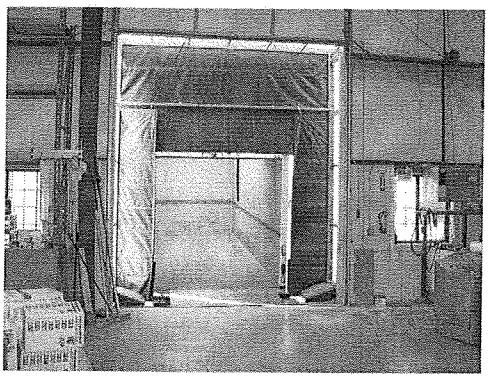

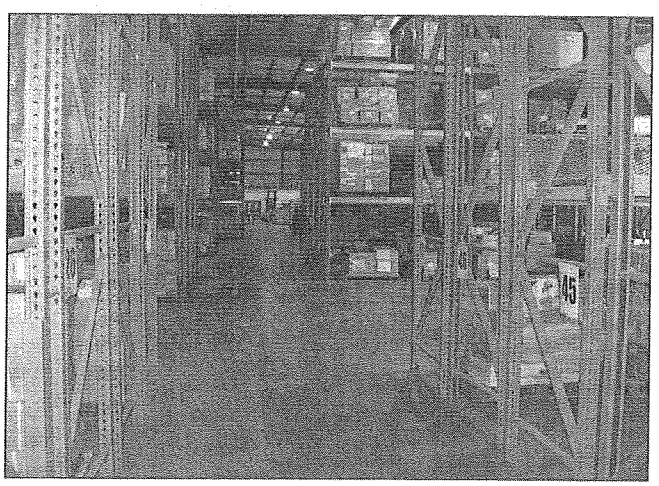

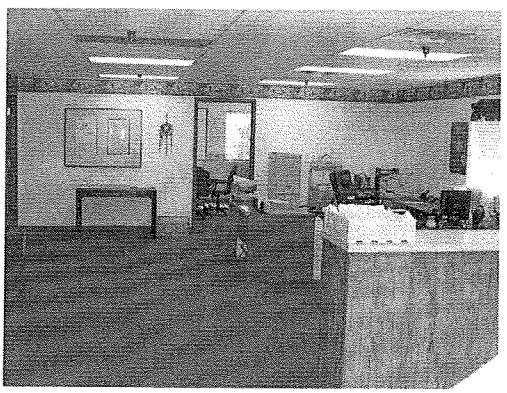

office space

- 3,840 square feet
- Large reception area
- 10 private offices
- Conference room/kitchen
- Break room
- 2 bathrooms
- Sheetrock and suspended ceilings
- Central air and forced-air gas heat

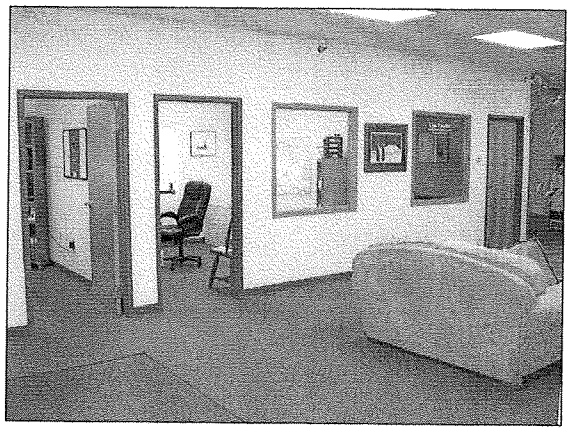

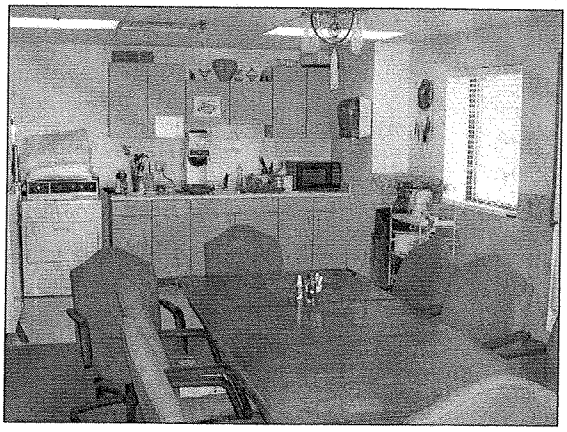

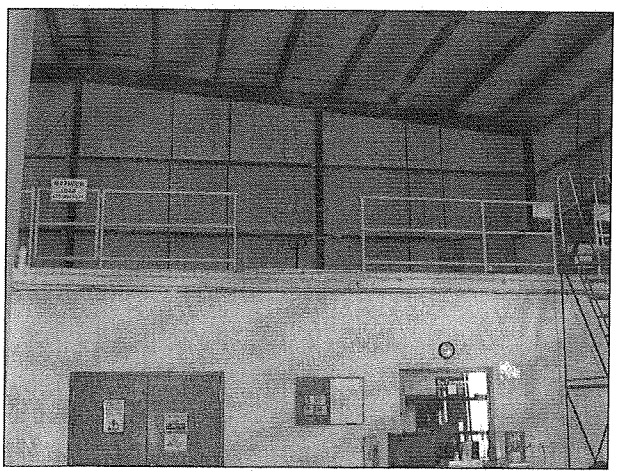

warehouse space

- 26,120 square feet
- 31 foot ceiling height
- 3 overhead doors – 1 loading dock and 2 drive in
- Insulated
- Heated by 8 suspended unit heaters

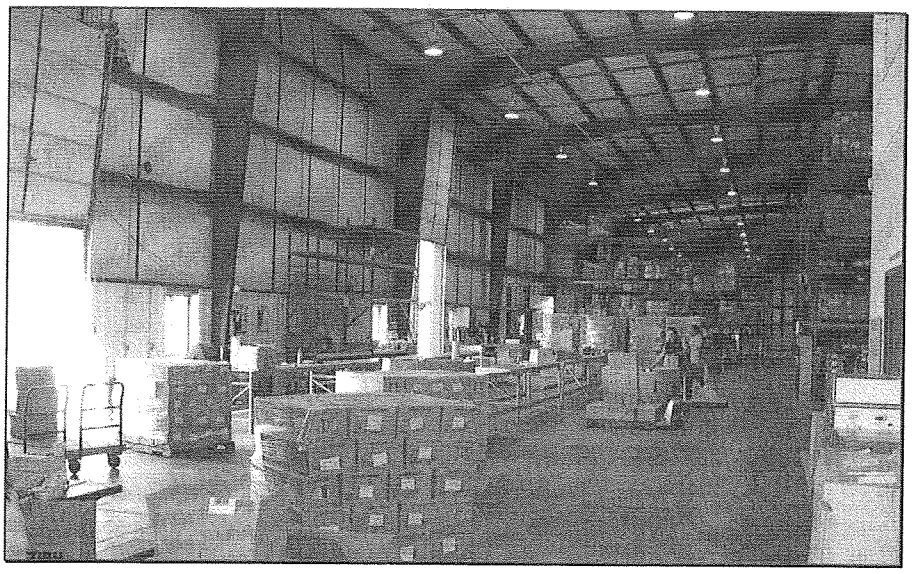

floor plan

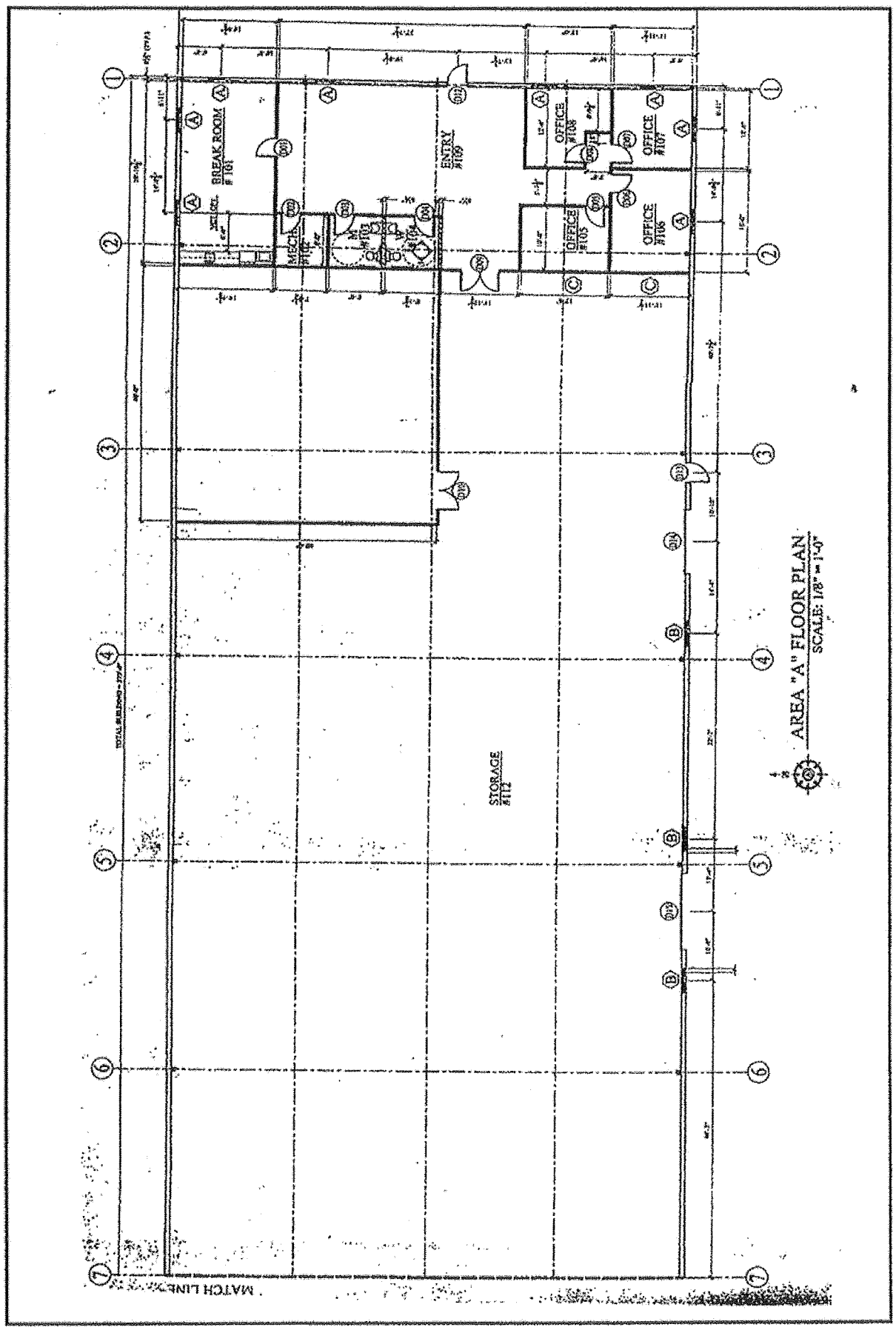
BREAK ROOM
#101
MECH.
#102
ENTRY
#109
OFFICE
#108
OFFICE
#107
OFFICE
#105
OFFICE
#106
STORAGE
#112
AREA "A" FLOOR PLAN
SCALE: 1/8" = 1'-0"
MATCH LINE

office floor plan detail

(drawings not to scale - measurements approximate)

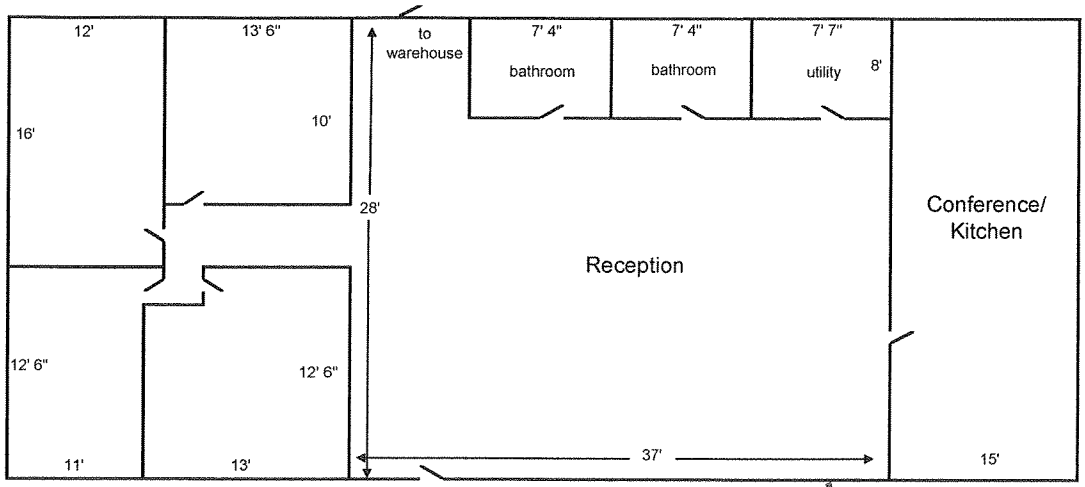

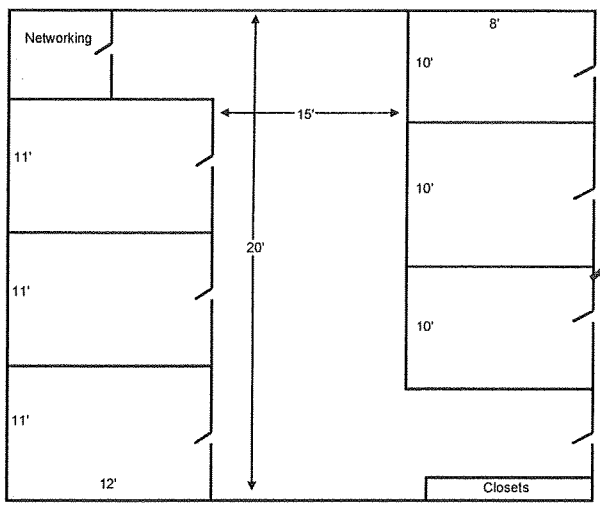

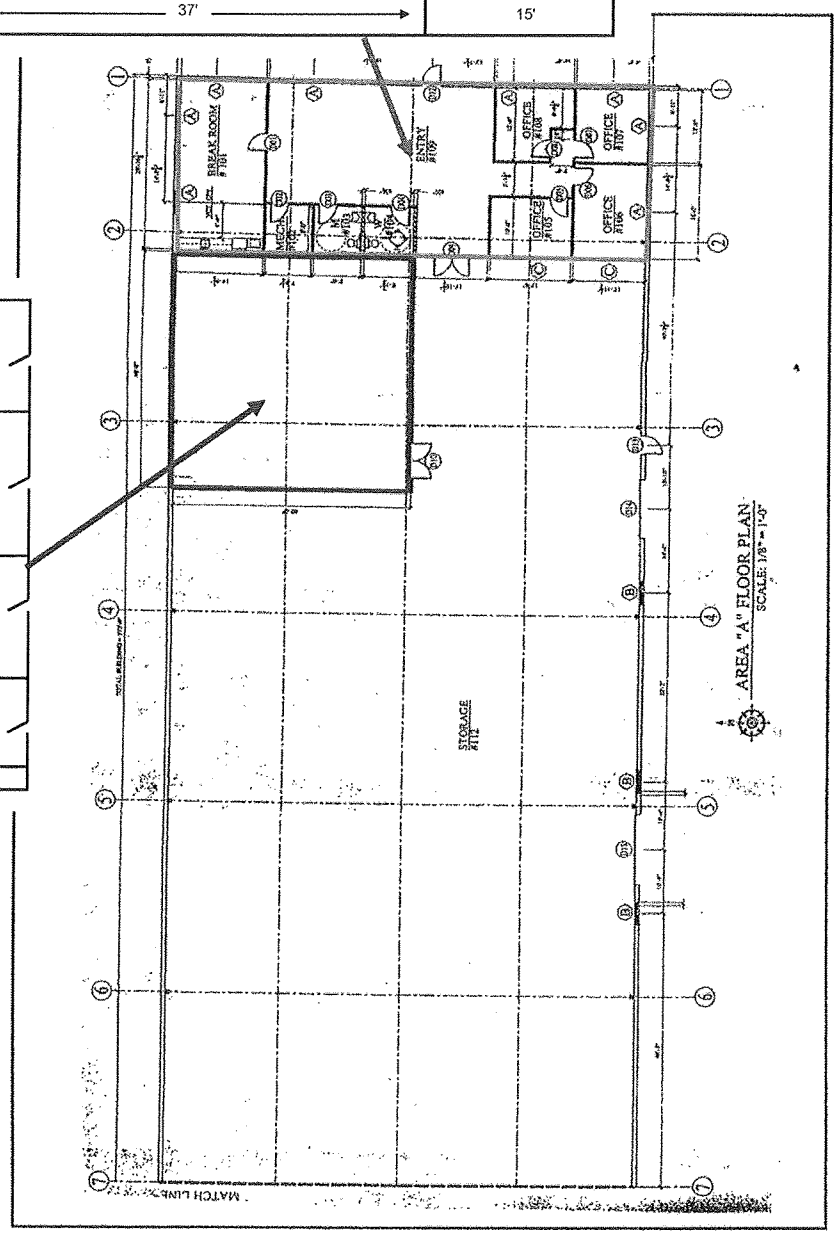

plat map

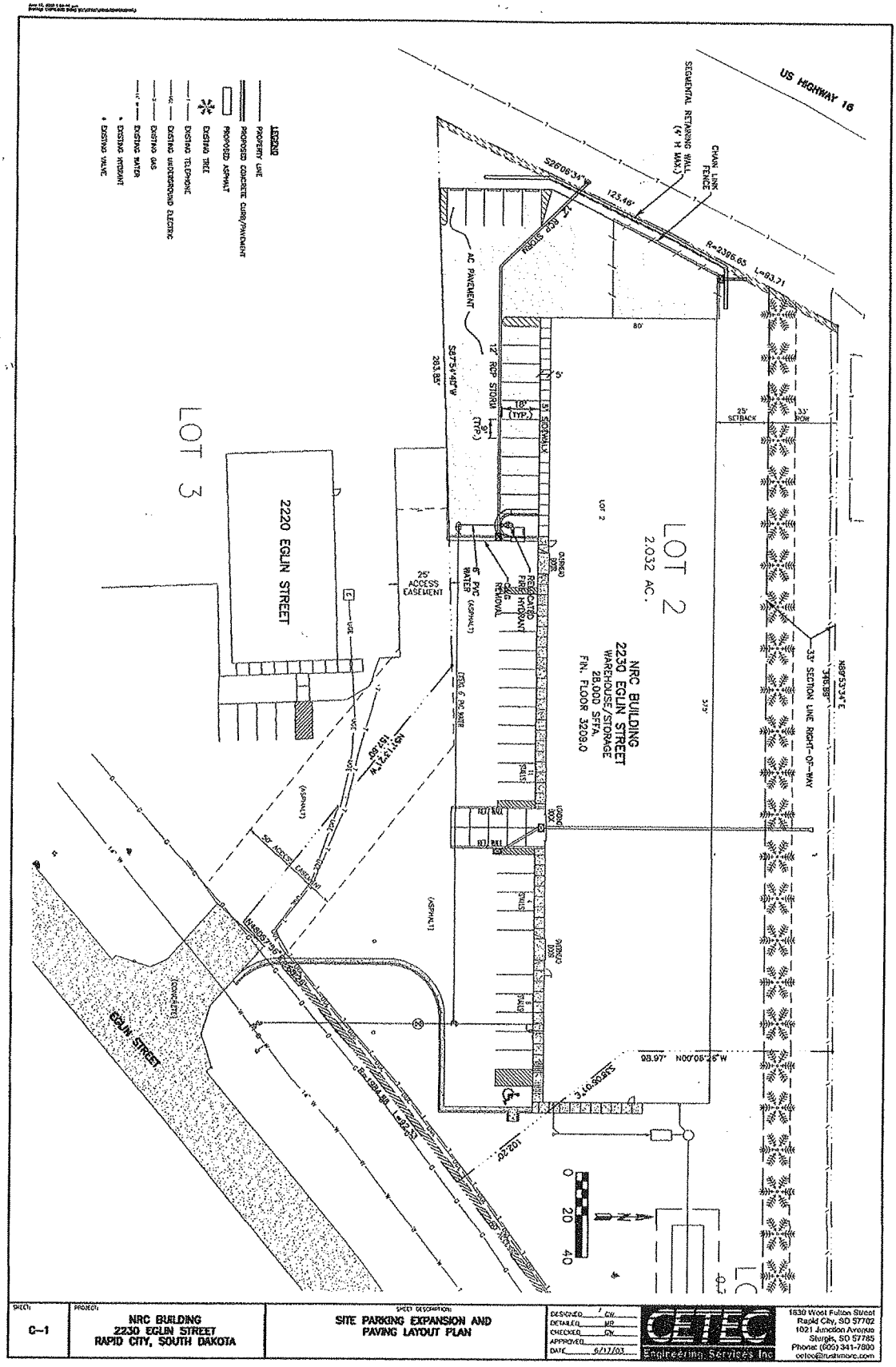

SHEET:	PROJECT:	SHEET DESCRIPTION:		
C-1	NRC BULDING 2230 EGLIN STREET RAPID CITY, SOUTH DAKOTA	SITE PARKING EXPANSION AND PAVING LAYOUT PLAN	DESIGNED CK DETAILED MB CHECKED CK APPROVED DATE 6/17/03	CETEC Engineering Services Inc 1630 West Fulton Street Rapid City, SD 57702 1021 Junction Avenue Sturgis, SD 57785 Phone: (605) 341-7800 cetec@rushmore.com

aerial

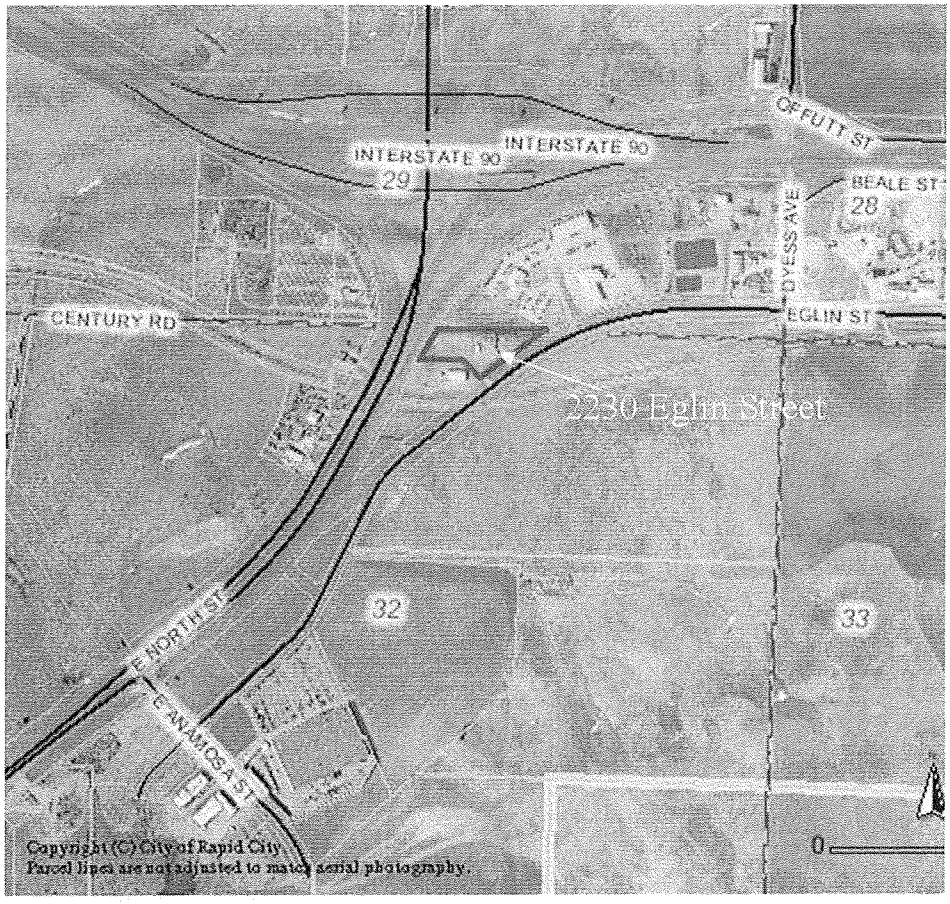

contour

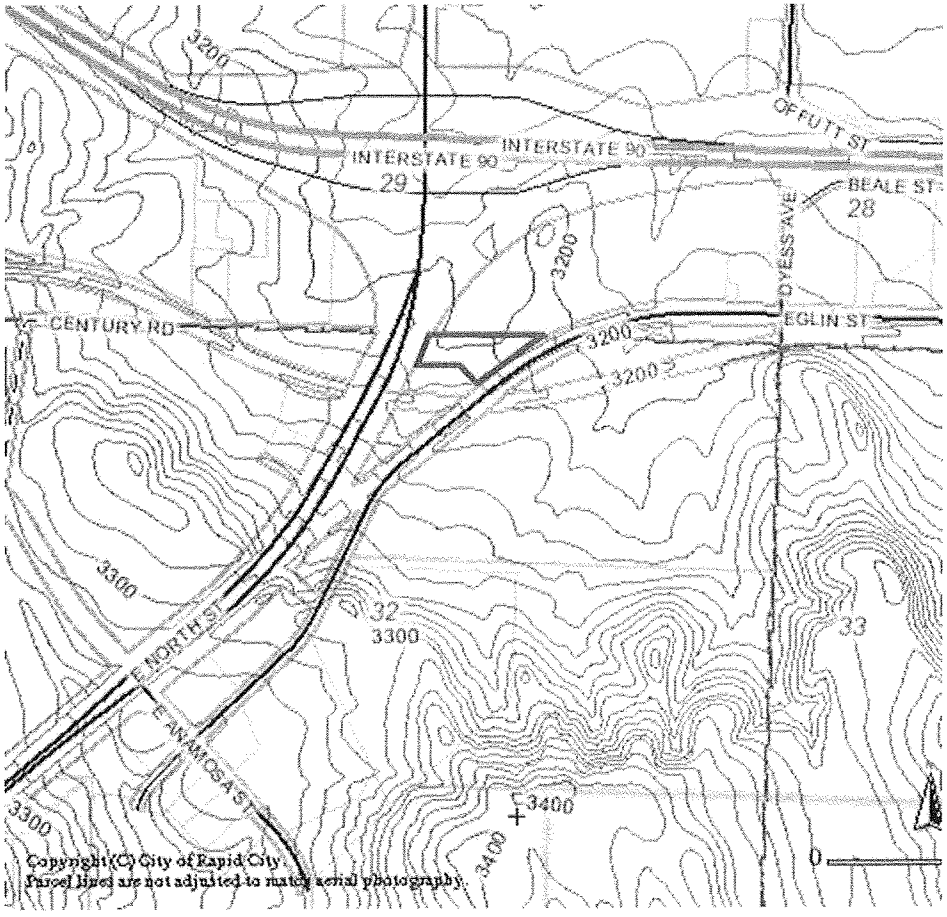

Sandra Runde, CCIM, SIOR
Prudential Kahler REALTORS®
2401 W Main Street, Rapid City SD 57702
605-343-7500 or 800-658-5550
E-mail sandra@kahlerinc.com
Visit our website at www.kahlerinc.com

legal notice

This report is only for use in the marketing of this property. It is not an estimate of value and should not be relied upon or used as such. Prudential Kahler REALTORS is representing the seller and acting only in the capacity of a South Dakota Real Estate Broker.

No representations or warranties, expressed or implied, by operation of law or otherwise, are made as to the accuracy or completeness of these materials or any other confidential materials, or as to the condition, quality, or fitness of the property; and neither Seller nor Prudential Kahler REALTORS nor any of their respective directors, officers, employees, stockholders, owners, affiliates, or agents will have any liability to receiving party or any other person resulting from receiving party's or any other person's use of the confidential materials. The property will be sold "as is," "where is," and "with all faults" as of the date of closing. Receiving party will have an opportunity to perform its own examination and inspection of the property and information relating to same and must rely solely on its own independent examination and investigation and not on any information provided by Seller or Prudential Kahler REALTORS. Only those representations and warranties, if any, that are made to receiving party in a sale contract when, as, and if same is executed by receiving party and Seller, and subject to such limitations and restrictions as may be specified therein, will have legal effect. Without limiting the generality of the foregoing, any environmental reports, any structural reports, or any other type or kind of report prepared by third party, if any, included in the confidential materials have not been prepared by Seller and neither Seller nor Prudential Kahler REALTORS makes any representation or warranties with respect to the truth, accuracy, or completeness of same and neither receiving party, nor its representatives nor any other person shall be entitled to rely on such reports or any information contained therein. Without limiting the foregoing, information contained in this Information Packet may vary from the date of publishing. In some instances, more complete or up-to-date information may have become available following the printing of the Information Packet. All sizes and square footage set forth herein are approximations only, based on information heretofore available. Actual sizes and square footage may vary. The reader should seek independent financial, accounting, and legal advice on these reports prior to taking any action.

Haverly, Terri L.

From: David Olsen [david.olsen@coldwellbanker.com]
Sent: Friday, April 09, 2010 11:33 AM
To: Haverly, Terri L.
Subject: latest on 50,000 SF

Terry.....I have two buildings that would work as follows:

The requirements of the space are:

1. Distance from the mine: < 60 miles. Near Rapid City and close to SDSMT is preferred.

Two locations: 1905 Lombardy (Lombardy Light Industrial Park) 21,000 SF 2509 Dyess (Northstar Light Industrial Park) 8,200 SF

2. Total area needed is about 50,000 sqft. Instead of being in one big building, 50,000 sqft can also be in separate (ex. 2~3) buildings at different locations.

3. Other requirements about the space:

□ It should be light industrial, which means that no heavy crane coverage is required. OK

□ Entrance and inside space should allow materials and equipment be moved by fork truck. OK

□ There should one or two high bay doors (with a loading dock if needed) for truck. 1905 Lombardy has 2 high bay doors AND elevated loading dock. 2509 Seger has 3 high bay doors and dock can be constructed quickly.

Questions the project wants answers are:

1. Is there one such space or twenty suitable spaces? (In other words the project wants to know that such space is likely to be available when we need it.) 1905 Lombardy may be available June 1st. 100' x 200' steel building 2509 Dyess is available immediately. 70' x 135' clearspan steel building.

2. If this space is available, what is the average lease cost per square foot? 1905 Lombardy is $3.75/SF NNN 2509 Dyess is $6.00 NNN.

3. How long can we rent/use the space? (The production/testing and assembly storage may last minimum three years.) Three year minimum is not a problem for either locations.

thanks for asking, and please put me on your list.....Full listing details available...MLS 97173 and MLS 91001

Dave Olsen

David T. Olsen, Broker Associate
Coldwell Banker Commercial Real Estate, Inc.
2700 West Main Street

Haverly, Terri L.

From: David Olsen [david.olsen@coldwellbanker.com]
Sent: Tuesday, April 13, 2010 3:34 PM
To: Haverly, Terri L.
Subject: 50,000 SF needed

Terri.....have one more very nice building. Exit 48 off I-90 12,400 SF $5.60/SF NNN per year. Taxes are $13,000 per year, so that brings it up to $6.70/SF including taxes. Lessee pays insurance and utilities. Excellent overhead doors (5) for full semis and semi drive thru.

Please put it on your list of candidates.

thanks.....DAVE

David T. Olsen, Broker Associate
Coldwell Banker Commercial Real Estate, Inc.
2700 West Main Street
Rapid City, South Dakota 57702
Licensed in South Dakota
Of 605-343-2700 Fx 605-342-2247
C 605-484-9744
David.olsen@coldwellbanker.com
Website: davidtolsen

	LBNE Water Cherenkov Detector **BASIS of ESTIMATE FORM (BoE)**	**Date of Estimate:** **Revision #:** **Prepared By: T. Russo/R. Sharma** **Approved By:** **Level 2 Manager**

WBS Number: **130.04.08.04**	**WBS Title:** **Safety Systems**

WBS Dictionary:

This element includes the Installation Integration Safety section and all related activities to ensure that construction meets the project goals and that work is done in accordance with DOE Cost, Schedule and Technical Guidelines.

Cost Type **(check all that apply):** _x_ EDIA Material _x_ EDIA Labor ___ MFG Material ___ MFG Labor	**Costing Method** **(check all that apply):** _x_ Engineering Judgment ___Physicist Estimate _x_ Level of Effort ___ Vendor Quote (attached) ___ Catalog Price (specify) ___ Prior purchase _x_ Prior experience ___ Parametric Estimate ___ Other- Description:_____

Attach Relevant Documents (including but not limited to):

M&S Contingency (%)**: 45**	**Labor Contingency** (%)**: 39**

Basis of Estimate
Details of Estimate: Safety Systems Personnel safety is of primary importance during all phases of the WCD project. Each sub-system will be required to have regular meetings and design reviews. It is expected that a representative from the Safety section will attend these meetings. Safety will be a priority for all systems, system development, prototyping, construction and installation. The scope of the Safety Section is the management and resources needed for the development, implementation, and oversight of an integrated ES&H plan for the WCD project. The Safety Section will interface with DUSEL safety groups and will be responsible for the development and implementation of safety policies, review of experimental hardware, and protection of all WCD workers and contractors at the DUSEL complex. It is the responsibility of the Safety Section to generate Safety Policies, participate in Experimental Safety Reviews, and generate Life Safety Requirements. In addition, Personnel Access and Training requirements need to be established and documented. The Safety Section must conduct Local Oversight and Inspection at DUSEL to ensure compliance with specifications and identify and correct infrastructure problems before they become serious issues. Travel and M&S Travel prior to the actual installation will be a few times per year to attend meetings and conferences. During installation it is expected that a full time WCD safety representative will be located at the DUSEL facility in Lead, SD. Contingency & Method:

130.04.08.04 Safety Systems

WBS LEVEL 5	ACTIVITY ID	ACTIVITY DESCRIPTION	START DATE	FINISH DATE	DURATION	RESOURCE	HOURS	COST	TOTAL with Escalation
130.04.08.04 Safety Systems	IIS1060	Safety Policies	1/11/2010	5/7/2012	582	General ES&H A6	303	30,517	50,755
						Mechanical Engineer P2	559	32,343	53,790
		Safety Policies Total					861	62,860	104,545
	IIS1070	Experimental Safely Review	1/11/2010	5/7/2012	582	General ES&H A6	303	30,517	50,755
						Mechanical Engineer P2	559	32,343	53,790
		Experimental Safely Review Total					861	62,860	104,545
	IIS1080	Life Safety Requirements	1/11/2010	3/30/2011	306	General ES&H A6	199	20,057	33,061
						Mechanical Engineer P2	294	17,005	28,031
		Life Safety Requirements Total					493	37,061	61,093
	IIS1090	Personnel Access Training	1/11/2010	10/14/2015	1439	General ES&H A6	604	60,944	92,591
						Mechanical Engineer P2	561	32,487	49,356
		Personnel Access Training Total					1,166	93,431	141,947
	IIS1100	Local Oversight and Inspection	10/15/2015	6/6/2022	1727	General ES&H A6	1,399	141,058	227,049
						Mechanical Engineer P2	2,072	119,965	193,097
		Local Oversight and Inspection Total					3,471	261,024	420,146
130.04.08.04 Safety Systems Total							**6,852**	**517,236**	**832,276**
Grand Total							**6,852**	**517,236**	**832,276**