BNL-98910-2013-CP

Mechanical study of 400 MHz double quarter wave crab cavity for LHC luminosity upgrade

B. P. Xiao[1], L. Alberty[2], S. Belomestnykh[1,3], I. Ben-Zvi[1, 3], R. Calaga[2], T. Grimm[4], J. Skaritka[1], Q. Wu[1]

[1]BNL, Upton, New York, USA
[2]CERN, Geneva, Switzerland
[3]Stony Brook University, Stony Brook, New York, USA
[4]Niowave, Inc., Lansing, Michigan, USA

Presented at the 4th International Particle Accelerator Conference (IPAC 13)
Shanghai, China
May 12-17, 2013

Collider-Accelerator Department
Brookhaven National Laboratory

U.S. Department of Energy
DOE Office of Science

Notice: This manuscript has been authored by employees of Brookhaven Science Associates, LLC under Contract No. DE-AC02-98CH10886 with the U.S. Department of Energy. The publisher by accepting the manuscript for publication acknowledges that the United States Government retains a non-exclusive, paid-up, irrevocable, world-wide license to publish or reproduce the published form of this manuscript, or allow others to do so, for United States Government purposes.

This preprint is intended for publication in a journal or proceedings. Since changes may be made before publication, it may not be cited or reproduced without the author's permission.

DISCLAIMER

This report was prepared as an account of work sponsored by an agency of the United States Government. Neither the United States Government nor any agency thereof, nor any of their employees, nor any of their contractors, subcontractors, or their employees, makes any warranty, express or implied, or assumes any legal liability or responsibility for the accuracy, completeness, or any third party's use or the results of such use of any information, apparatus, product, or process disclosed, or represents that its use would not infringe privately owned rights. Reference herein to any specific commercial product, process, or service by trade name, trademark, manufacturer, or otherwise, does not necessarily constitute or imply its endorsement, recommendation, or favoring by the United States Government or any agency thereof or its contractors or subcontractors. The views and opinions of authors expressed herein do not necessarily state or reflect those of the United States Government or any agency thereof.

MECHANICAL STUDY OF 400 MHZ DOUBLE QUARTER WAVE CRAB CAVITY FOR LHC LUMINOSITY UPGRADE*

B. P. Xiao[1†], L. Alberty[2], S. Belomestnykh[1,3], I. Ben-Zvi[1,3], R. Calaga[2], T. Grimm[4], J. Skaritka[1], Q. Wu[1].
[1]BNL, Upton, New York, USA
[2]CERN, Geneva, Switzerland
[3]Stony Brook University, Stony Brook, New York, USA
[4]Niowave, Inc., Lansing, Michigan, USA

Abstract

A double quarter wave crab cavity has been designed in Brookhaven National Lab for the Large Hadron Collider (LHC) luminosity upgrade. A finite element model software is used to simulate the mechanical strength of this crab cavity. The results are presented and a reinforcement design has been proposed to meet the safety requirements. The reinforcement components, as well as the cavity, are fabricated and assembled at Niowave.

INTRODUCTION

The high luminosity upgrade of LHC requires vertical and horizontal crabbing of the beams. To do this, a double quarter wave superconducting RF crab cavity has been designed by BNL and CERN. Its prototype is fabricated by Niowave, Inc, and is under preparations for vertical testing at BNL. The mechanical strength safety requirements at both BNL and CERN apply to this cavity.

Based on the simulations with a finite element model using software ANSYS™, a solution for the mechanical strength of this crab cavity has been proposed, and a prototype design has been detailed. In this paper we introduce the simulation results of the prototype design.

CAVITY DESIGN

The RF design of the double quarter wave crab cavity is introduced elsewhere [1], and its geometry is shown in Figure 1. The cavity looks like a section of coaxial structure, with its center conductor cut and separated to form two capacitive plates, with a vertical electric field in between at the fundamental mode, and thus offers the crabbing voltage needed. Comparing to the quarter wave version [2, 3], it is optimized to cancel the on-axis accelerating (longitudinal) field and to reduce the overall nonlinearity of the deflecting voltage as a function of offset [1]. Some of the key parameters of this cavity are listed in Table 1.

*This work is supported by Brookhaven Science Associates, LLC under Contract No. DE-AC02-98CH10886 with LARP and the U.S. DOE, and supported by EU FP7 HiLumi LHC - Grant Agreement 284404.
†binping@bnl.gov

The fundamental mode electro-magnetic field distribution in the cavity is shown in Figure 2. The center capacitive plates are under low magnetic and high electric field.

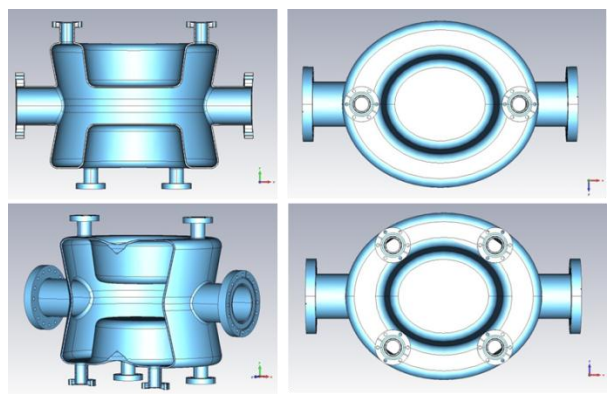

Figure 1: Geometry of the double quarter wave cavity.

Table 1: Key parameters of the cavity.

Fundamental Mode Frequency [MHz]	400
Nearest Mode Frequency [MHz]	579
Vertical Deflection Voltage [MV]	3
Rt/Q (Fundamental Mode) [Ohm]	400
Epeak [MV/m]	44
Bpeak [mT]	60
Vacc [kV]	1.6
Stored Energy [J]	9

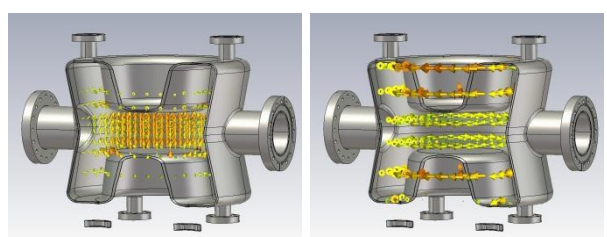

Figure 2: Electric field (left) and magnetic field (right) of the fundamental mode.

MECHANICAL STUDY

Conditions

Based on the safety requirements at CERN and BNL, with a relief valve set at 1.5 bar and safety coefficient of 1.43/1.1, the cavity needs to pass a proof test with maximum pressure of 2 bar outside the cavity

and vacuum inside the cavity. During the vertical test, the cavity will be supported vertically, with fixed displacements on one of the beam flange. Self-weight should be considered in this case. The failure mode considered for the presented strength assessment is gross plastic deformation [4].

The cavity is made of high RRR niobium and the stiffeners are made of titanium. The properties of these two material are listed in Table 2, with data from reference [4] and [5]. The relevant safety factor considered on the relevant material properties is 1.05, the maximum allowable stress is calculated from the yield divided by this number. For Nb, we set the maximum allowable stress at 70 MPa.

Software ANSYS™ is used for stress and deformation analysis, 2 mm mesh size was used in all simulations.

Table 2: Properties of Nb and Ti at room temperature

	Density [kg/m^3]	Modulus [GPa]	Poisson's ratio	Yield [MPa]
Nb	8570	103	0.38	75
Ti	4510	102	0.338	>276

Cavity thickness

The thicknesses of the standard Nb sheets that can be provided by industry varies from 2.8 mm to 4.0 mm. To determine the thickness that should be adopted for the crab cavity, a relationship between the maximum stress intensity on the cavity and Nb wall thickness has been studied, with results shown in Figure 3. 4 mm Nb sheets have been chosen to fabricate the cavity, with the beam pipes made of 2.8 mm Nb. A 0.18 mm chemical etching has been applied to the inner surface of the cavity after fabrication.

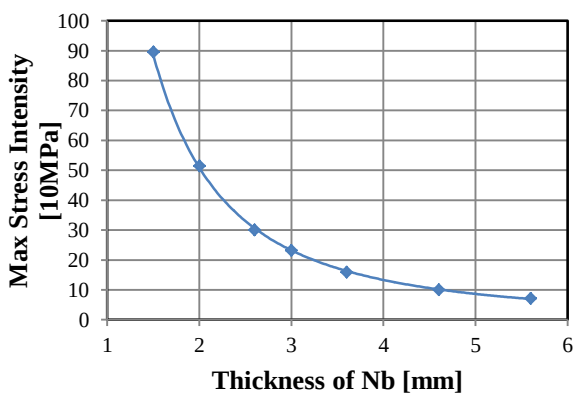

Figure 3: Crab cavity maximum stress intensity vs Nb thickness.

Cavity deformation

The analysis shows that with pressure applied to outside of the cavity while maintaining vacuum inside the cavity, the two capacitive plates tend to move closer, and the high magnetic field region start to bend and form high stress area. The total deformation of the cavity under a differential pressure of 2 bar is shown in Figure 4, with the deformation at the center of the capacitive plate of about 1.34 mm. The stress intensity of the cavity under 2 bar is shown in Figure 5, with a maximum stress of about $1.50 \cdot 10^8$ Pa. The stresses inside and outside the cone area, as well as the center of the flat plates, are higher than $7 \cdot 10^7$ Pa, the maximum allowable stress for Nb.

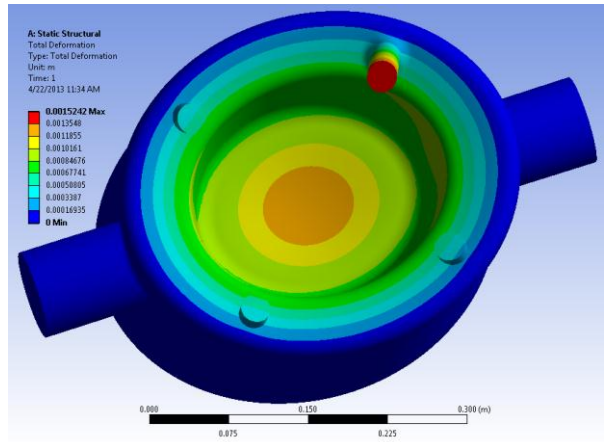

Figure 4: Cavity deformation without stiffeners.

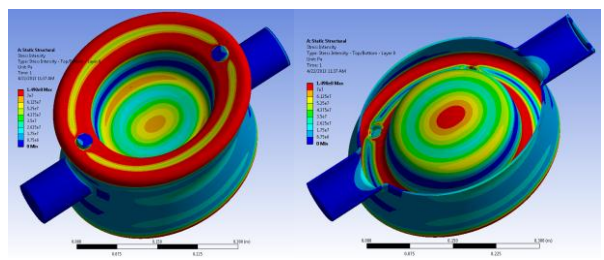

Figure 5: Cavity stress without stiffeners. Red color indicates area with stress higher than the maximum allowable stress at 70 MPa.

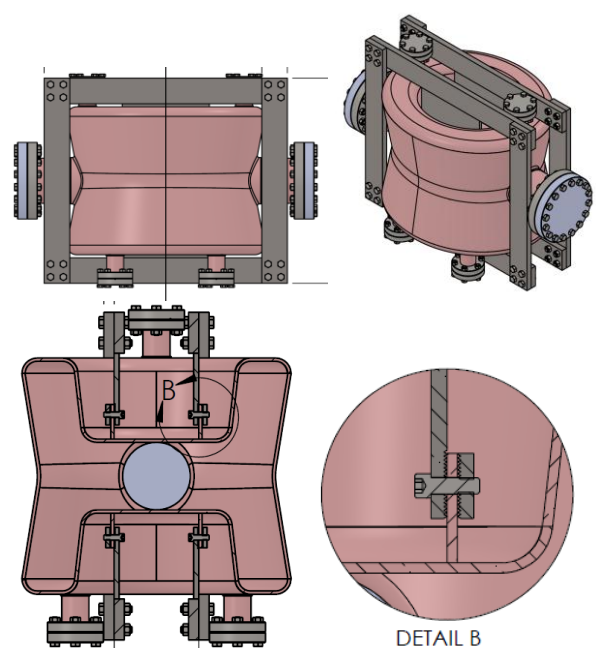

Figure 6: Geometry of the double quarter wave cavity with stiffeners.

Cavity stiffener design

The above analysis on bare cavity implied that one way to make the cavity stiffer is to hold the two capacitive plates from moving closer while applying pressure outside. Ti bars with 2” width and 0.5” thickness have been used to form two frames, as shown in Figure 6. The details of how the Ti frames are attached to the Nb cavity are shown in Figure 6. Four Nb bars have been electron beam welded to the capacitive plates, Ti plates with serrated surface are bolted to the Nb bars, with the aid of another Ti bar with serrated surface.

Cavity deformation with stiffener

The fabrication model from Niowave has been simplified for ANSYS™ simulations. Simulation model has been set to be symmetric along the vertical symmetry plane and one half of the model (shown in Figure 7) has been used to reduce the calculation time.

The total deformation is shown in Figure 7, with the maximum deformation of around 0.5 mm, located at the center of the capacitive plates. The stress intensity is shown in Figure 8. The highest stress intensity located on the stiffening plate is $2.303 \cdot 10^8$ Pa and the highest stress on crab cavity is less than $7.0 \cdot 10^7$ Pa.

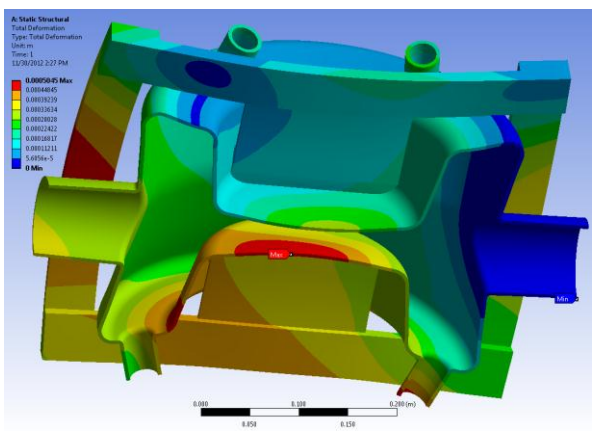

Figure 7: Cavity deformation with stiffeners.

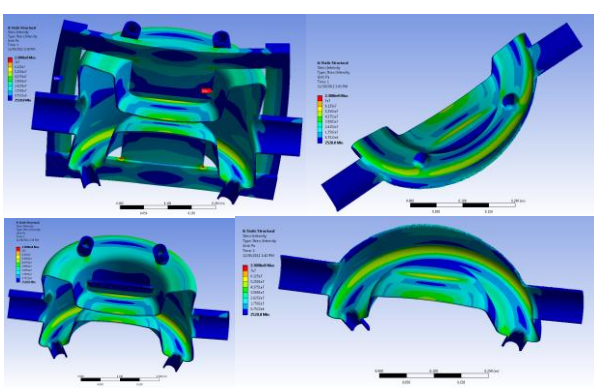

Figure 8: Cavity stress with stiffeners.

CAVITY FABRICATION

The cavity has been fabricated at Niowave. Figure 9 shows the fabrication steps. The first three pictures show the components made of Nb, and then electron beam welded together. The flanges made of stainless steel were brazed onto the Nb cavity. The last photo shows the Ti stiffening frames attached to the Nb cavity. The cavity was chemically treated using 1:1:2 buffered chemical polish (BCP) solution of HF (49% wt), HNO_3 (69% wt), and H_3PO_4 (85% wt) to etch 150 µm Nb. The cavity was then sent to BNL for a 10 hour 600°C baking in a vacuum oven. After the baking the resonant frequency was measured to be 403.3117 MHz. The cavity quality factor at room temperature was 5,400, in agreement with simulation result for Nb’s room temperature electric conductivity at 6.2×10^6 /(Ω·m). The cavity was then shipped back to Niowave for a light BCP (30 µm material removal) and high pressure rinse. Presently, the cavity is at BNL for the vertical cold test.

Figure 9: Fabrication of the double quarter wave crab cavity.

SUMMARY

A double quarter wave crab cavity was designed. The mechanical study has been carried out, and a solution to meet the safety codes of BNL and CERN has been proposed. A prototype cavity has been,fabricated, surface treated, and particulate-free cleaned by Niowave. 600°C bake was performed at BNL. Vertical test with temperature down to 2 K will be carried out soon at BNL.

REFERENCES

[1] R. Calaga et al., these proceedings, 2013.
[2] R. Calaga et al., IPAC12, New Orleans, LA, 2012.
[3] Q. Wu et al., 2nd HiLumi meeting, Frascati, 2012.
[4] L. Alberty, CERN report EDMS No. 1284428.
[5] K. M. Wilson et al., PAC03, Portland, OR, 2003.