Pres. 4th Particle Accelerator Conf. (IPAC13)
Shanghai, China, 12-19 May (2013)

BNL 100897-2013-CP

FABRICATION, TRANSPORT AND CHARACTERIZATION OF CESIUM POTASSIUM ANTIMONIDE CATHODE IN ELECTRON GUNS*

T. Rao, S. Belomestnykh, I. Ben-Zvi, X. Liang, I. Pinayev,
B. Sheehy, J. Skarita, **J. Smedley**, E. Wang, and T. Xin
Brookhaven National Laboratory
Upton, NY 11973

* * *

M. Ruiz-Oses
Stony Brook University
Stony Brook, NY

* * *

R.R. Mammei, J.L. McCarter, and M. Poelker
JLAB
Newport News, VA 23606

May, 2012

*This manuscript has been authored by Brookhaven Science Associates, LLC under Contract No. DE-AC02-98CH10886 with the U.S. Department of Energy. The United States Government retains, and the publisher, by accepting the article for publication, acknowledges, a world-wide license to publish or reproduce the published form of this manuscript, or allow others to do so, for the United States Government purposes.

DISCLAIMER

This work was prepared as an account of work sponsored by an agency of the United States Government. Neither the United States Government nor any agency thereof, nor any of their employees, nor any of their contractors, subcontractors, or their employees, makes any warranty, express or implied, or assumes any legal liability or responsibility for the accuracy, completeness, or any third party's use or the results of such use of any information, apparatus, product, or process disclosed, or represents that its use would not infringe privately owned rights. Reference herein to any specific commercial product, process, or service by trade name, trademark, manufacturer, or otherwise, does not necessarily constitute or imply its endorsement, recommendation, or favoring by the United States Government or any agency thereof or its contractors or subcontractors. The views and opinions of authors expressed herein do not necessarily state or reflect those of the United States Government or any agency thereof.

FABRICATION, TRANSPORT AND CHARACTERIZATION OF CESIUM POTASSIUM ANTIMONIDE CATHODE IN ELECTRON GUNS

T. Rao, S. Belomestnykh, I. Ben-Zvi, X. Liang, I. Pinayev, B. Sheehy, J. Skaritka, J. Smedley, E. Wang, T. Xin, BNL, Upton, NY 11973, USA

M. Ruiz-Oses, Stony Brook University, Stony Brook, USA

R. R. Mammei, J. L. McCarter, M. Poelker, JLAB, Newport News, VA 23606, USA

Abstract

We have fabricated two cesium potassium antimonide cathodes at BNL, transported them in a UHV load-lock chamber to JLab and tested their performance in DC gun at 100 kV and 200 kV. These cathodes have delivered current of 16 mA and current density up to 8 A/cm^2 without significant degradation. Two more load-lock chambers have been built to transport and insert similar cathodes in SRF guns operating at 704 MHz and 112 MHz. In this paper, we will describe the design of the load-lock chambers, transfer mechanisms, transport of the cathodes over ~ 750 km in UHV environment and the cathode performance in the gun environment.

INTRODUCTION

There has been considerable interest in generating high average current, low emittance and high brightness electron beams for a number of accelerator applications. Recent studies have shown cesium potassium antimonide to be a robust photocathode capable of producing high peak and average currents. Typically, this cathode is fabricated in a UHV system attached to the gun. However, for some applications, the fabrication site has to be physically removed from the gun location and the cathode has to be transferred between the two sites in UHV load-lock chambers. Such a detachable load-lock system should meet the constraints imposed by the fabrication chamber, gun as well as the transport system. We discuss below the constraints faced in three different guns, the design of detachable load-lock systems for these guns and performance of a cathode transported, using one of these systems, to a DC gun.

Load-Lock for DC Gun

The primary constraints in designing the load-lock system for the DC gun were: the transfer mechanism should be compatible with the existing system and the cathode puck should be able to the hold-off the high voltages encountered in the DC gun. The system proposed for these measurements were the 100 KV and 200 KV DC guns at JLab. Hence, we decided to use the same transfer suitcase that was used in CEBAF and design the puck to be similar to the pucks used with GaAs, but make it out of aluminium with a thin layer of stainless sheet explosion bonded to the surface to act as the substrate for the K_2CsSb cathode. The transfer suitcase consists of a manipulator with a puck holder, vacuum plenum and an all-metal isolating gate valve (schematic shown in Fig. 1). The vacuum plenum with 20L/s (N_2) ion pump and a 600 L/s (H_2) NEG pump provided a base pressure of 10^{-11} Torr in the suitcase. This suitcase was attached to the UHV Cathode fabrication chamber, pumped, baked and maintained at 10^{-11} Torr vacuum prior to cathode formation. The cathode was fabricated by sequential evaporation of Sb, K and Cs, using conventional recipe [1]. The quantum efficiency and the spectral response of the photocathodes were measured immediately after the fabrication.

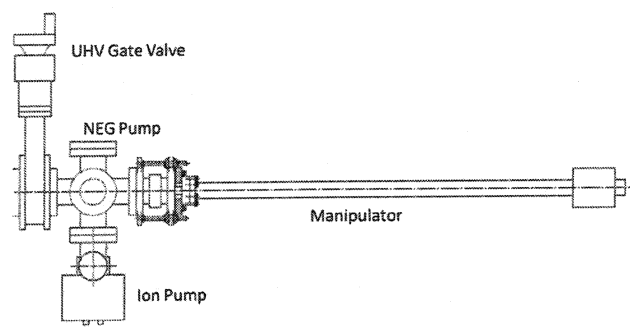

Figure 1: Schematic of the transfer suitcase.

After fabrication, the puck was transferred to the suitcase, isolated from the fabrication chamber by closing the gate valve and disconnected from the system. The suitcase with the cathode was then transported to JLab by car, with trip duration of 10 hours. The ion pump was powered during the entire trip and the vacuum was maintained at 10^{-11} Torr with occasional spikes to 10^{-9} Torr when the vehicle encountered a bump in the road. Upon arrival at JLab, the suitcase was attached to a small vacuum cross, at the gate valve. This cross was pumped and baked to vacuum levels comparable to that of the suitcase. The gate valve was then opened and the cathode was transferred to the high voltage gun. The QE after the transfer was comparable to that after fabrication.

Figure 2 shows charge extracted from 100 kV gun with 532 nm CW laser with a spot size of 350 μm FWHM. As can be seen from the figure, at current levels of 10 mA, the QE does not change, but rather increases slightly which is shown to be due to thermal effects on the cathode induced by the laser. Current densities of ~ 10A/cm^2 have been delivered by this cathode. Increasing the current to > 16 mA adversely affects the QE. This degradation has been attributed to heating and subsequent evaporation of the cathode material, induced by high power density of the laser required to generate these high current densities

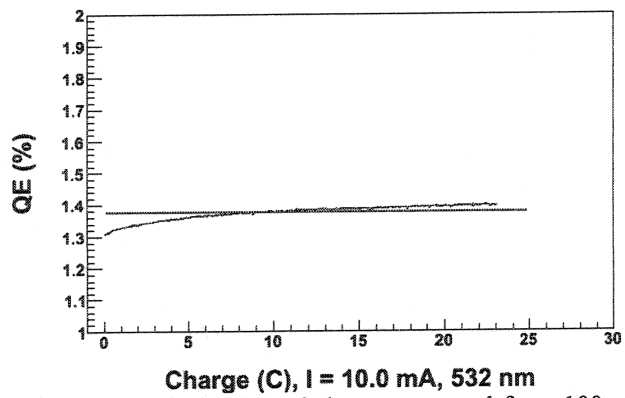

Figure 2: QE as a function of charge extracted from 100 kV DC gun using CW 532 nm laser. The corresponding current density is 10 A/cm^2.

Load-Lock for 112 MHz SRF gun

112 MHz, SRF, quarter wave resonator gun was built to provide electron beams to increase the luminosity of the Relativistic Heavy Ion Beam (RHIC) at BNL by coherent electron cooling. The constraints for inserting the cathode into this gun are a) particulate free insertion to preserve the Q of the SRF cavity b) breakdown-free operation in field gradients > 20 MV/m and c) thermal isolation from the cavity wall. Figure 3 shows a drawing of the insertion device. The load-lock chamber with the magazine supporting 4 cathode pucks is shown in Fig. 4. The vacuum in this chamber is maintained by a 25 l/s ion pump and a 400 l/s NEG pump. The magazine can store up to 5 cathodes reducing the down time for cathode exchange, once the load-lock is in place.

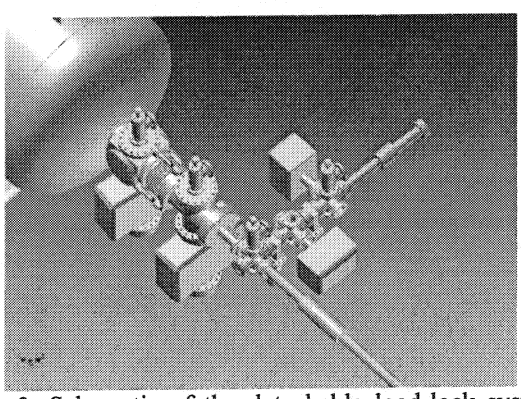

Figure 3: Schematic of the detachable load-lock system for 112 MHz SRF gun. The manipulator in the bottom right quadrant transfers the cathode from the load-lock chamber at the top right quadrant to the gun in the top left quadrant.

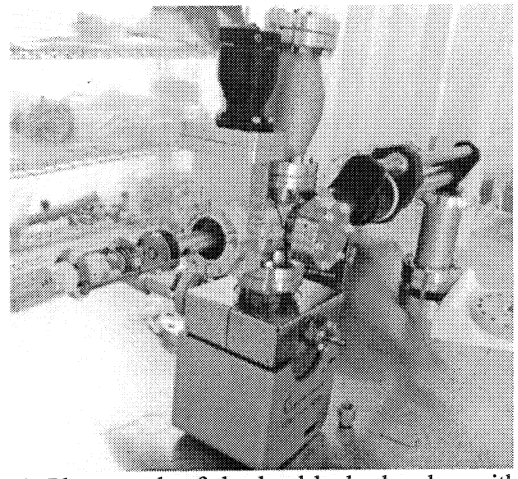

Figure 4: Photograph of the load-lock chamber with the magazine in the foreground. Two sets of pucks are mounted on the magazine.

Prior to fabricating the cathode, the substrate can be heated up to 400 C by irradiating the Mo substrate puck with a 5 W CW laser operating at 532 nm. The maximum achievable temperature is dictated by the absorption coefficient of the material of the puck and the optical arrangement. Figure 5 shows the temperature ramp-up and -down of the Mo puck. The laser heating has several advantages over the normally used resistive heating: a) only the puck is heated, b) temperature of surrounding vacuum chamber is minimally changed reducing the gas load in the system significantly, c) both heating and cooling are very fast, and d) the heat source is external to the system hence changes and modification can be made to it without altering the system. Since most photoinjector facilities already have a laser in place, the high cost associated with the laser is not a significant concern.

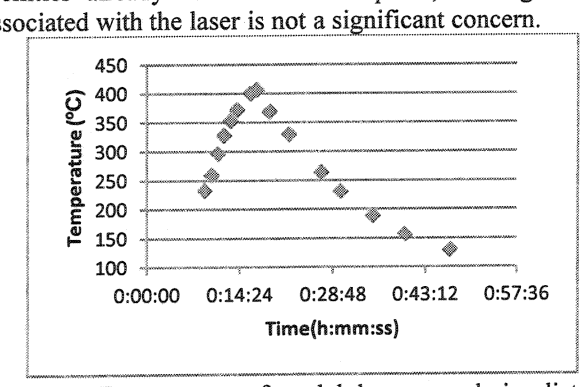

Figure 5: Temperature of molybdenum puck irradiated with 5 W, 532 nm CW laser. The laser is turned off at 0:17:00.

Load-Lock for 704 MHz injector

The 704 MHz injector is built to test the concept of energy recovery LINAC for high average currents and can support currents up to 0.5 A. The cathode of choice is K_2CsSb that is an integral part of a quarter wave choke joint. Figure 6 shows drawing of the SRF gun and Fig. 7, the grooved choke joint that supports the cathode [2].

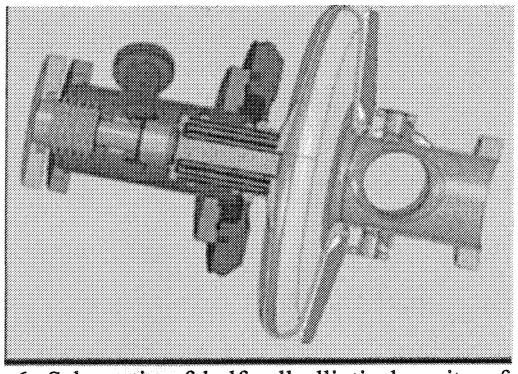

Figure 6: Schematic of half-cell elliptical cavity of 704 MHz SRF gun with the choke joint on the left and electron beam tube on the right.

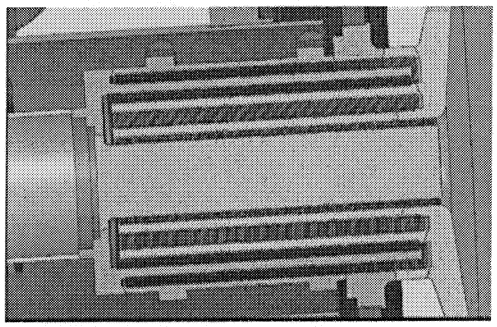

Figure 7: Schematic of grooved, double choke joint supporting the cathode. Back wall of the gun is seen at the right edge of the drawing..

Photograph of the cathode stalk mounted to the transport cart and the transport cart are shown in Figs. 8 and 9 respectively. The vacuum plenum of the transport cart is made up of 2 ion pumps, one with the pumping speed of 400 l/s and the second with 40 l/s and a TSP. A cold-shield near the isolating valve protects the cathode from the gas load released during the baking of the mating section of the load-lock. At present the cathode stalk with copper cathode has been inserted into the gun and RF testing will be starting very shortly.

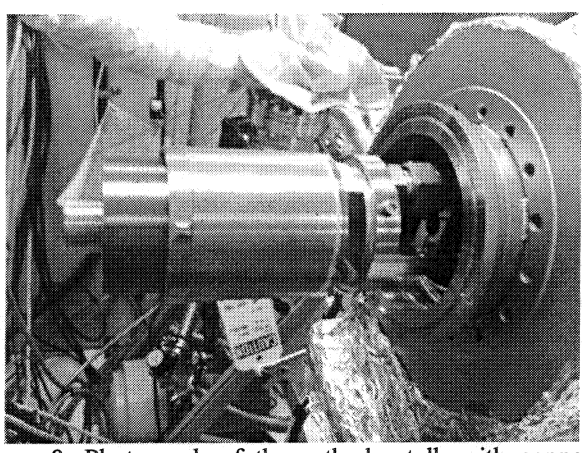

Figure 8: Photograph of the cathode stalk with copper cathode mounted on the transport cart.

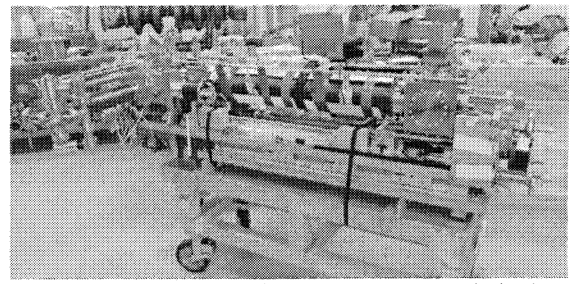

Figure 9: Photograph of the transport cart, baked and ready to be attached to the gun.

ACKNOWLEDGMENT

This research has been supported by the United States Department of Energy through Contract numbers DE-AC02-98CH10886, DE-SC0005713, DE-AC05-84ER40150 and KC0407-ALSJNT-10013. The Unites States Government retains, and the publisher, by accepting the article for publication, acknowledges, a world-wide license to publish or reproduce the published form of this manuscript, or allow others to do so, for the Unites States Government purposes.

REFERENCES

[1] R. R. Mammei et al. Phys. Rev. ST Accel. Beams 16, (2013) 033401.

[2] W. Xu et al. "JACoW "Multipacting simulation and test results of BNL 704 MHz SRF gun" IPAC 2012, New Orleans, May 2012 WEPPC111, p 2480 (2012), http://www.JACoW.org