AD/AP–15

Accelerator Development Department
Accelerator Physics Division
BROOKHAVEN NATIONAL LABORATORY
Associated Universities, Inc.
Upton, NY 11973

Accelerator Physics Technical Note No. 15

Estimate of the Coupling Impedance and Individual Bunch Instabilities for the Low Energy Booster (SSC)

A.G. Ruggiero

January 1990

ESTIMATE OF THE COUPLING IMPEDANCE AND INDIVIDUAL BUNCH INSTABILITIES FOR THE LOW ENERGY BOOSTER (SSC)

A.G. Ruggiero

We have made an estimate of the longitudinal coupling impedance Z/n for the LEB. The result is given by the curves of Fig. 1 which are the real and imaginary parts of the coupling impedance versus the harmonic number n, estimated for the injection energy of 600 MeV. The largest contribution is given by the pure space charge which is about 200 i ohm at injection and 5 i ohm at top energy. The real part of the impedance is roughly independent of the beam energy. There is a cut–off in correspondence of n $\sim$ 2,000 at injection and n $\sim$ 22,000 at top energy, above which one is not concerned any longer with the beam stability issue. In the calculation we have included: a stainless steel vacuum chamber of 0.3 mm thickness and about 3 cm average radius, 200 bellows and 100 beam position monitors. We have found that the contribution of vacuum chamber steps is negligible.

A similar analysis has also been carried out for the transverse coupling impedance $Z_\perp$. Again we found that the largest contribution is given by the pure space charge term which varies between 31 i M Ω/m at injection to 4 i M Ω/m at extraction. The resistivity of the vacuum chamber provides the largest contribution when n–ν is the smallest that is for n=17, in which case $Z_\perp \sim$ (1-i) 0.5 M Ω/m roughly independent of the beam energy. Assuming a longitudinal coupling impedance $|Z/\mathrm{n}| \sim 1$ ohm for all the other vacuum chamber components, this translates to a contribution of only $|Z_\perp| \sim 0.2$ M Ω/m.

Next we have examined the stability of individual bunches (microwave instabilities) and found that actually for intensities of 1×10^{10} protons per bunch the single bunches are stable. In the transverse plane one is concerned with the so–called fast head–tail instability where the growth rate of the instability could be larger than the synchrotron frequency, in which case the beam bunch can be treated with the usual method of coasting unbunched beams possibly excited by perturbations at wavelengths shorter than the bunch length. Throughout the whole acceleration cycle in the LEB the beam is always below the transition energy; thus the ordinary slower head–tail instability is of no concern since the beam is already stable with the natural sign of the chromaticity. The stability criterion can be written as

$$|Z_\perp| < \frac{E_0}{\mathrm{e}} \; \frac{\pi\nu\beta\gamma}{RI_\mathrm{p}} \; |(\mathrm{n}-\nu)\eta + \zeta| \; \frac{\Delta\mathrm{p}}{\mathrm{p}}$$

where the space charge contribution enters as the largest. This condition is seen to be satisfied also for relatively small momentum spread $\Delta\mathrm{p}/\mathrm{p}$ for $\mathrm{n} \geq 100$ also for corrected chromaticity $\zeta \sim 0$. In the formula above I_p is the bunch peak current and R the average radius.

To estimate the longitudinal stability of individual bunches in the ELB one calculates the following complex quantity

$$U' - iV' = -i\frac{2\mathrm{e}I_\mathrm{p}\beta^2(Z/\mathrm{n})}{\pi|\eta|E(\Delta\mathrm{E}/\mathrm{E})^2_\mathrm{FWHM}}$$

where

e = charge on the electron

β = ratio of particle velocity to speed of light = v/c

Z = the complex beam–environment coupling impedance n = the harmonic number of instability

E = total energy of a proton

$(\Delta\ \mathrm{E}/\mathrm{E})_\mathrm{FWHM}$ = the full–width half–maximum relative bunch energy spread.

The stability criterion is valid only in the case the wavelength of the perturbation is smaller than the bunch length and when the growth rate of the instability, in absence of Landau damping, is larger than the synchrotron frequency. Otherwise the beam bunch is stable. Also

$$\eta = \gamma_T^{-2} - \gamma^{-2}$$

where $\gamma = \mathrm{E}/\mathrm{E}_0$ and E_0 is the proton rest energy. The bunch peak current is given by

$$I_\mathrm{p} = (\mathrm{Ne}\beta c\sqrt{2}\pi\sigma)$$

N = number of protons per bunch

σ = rms bunch length.

In our notation Z = X+iY with X>0 a resistance and Y is positive for a capacitive reactance and negative for an inductive reactance. We remind again that the final energy is always below LEB transition energy. The stability diagram is shown in Fig. 2 for different distribution functions. Since we are always below the transition energy, sign $(\mathrm{k}_0)>0$. If there is no resistance, the reactance being positive and the accelerating cycle always below

the LEB transition energy, the beam bunches are always stable. The variation of U' during the cycle is shown in Fig. 2. Only the presence of a resistance in the coupling impedance can cause the bunches to be unstable. We can calculate the tolerances on X/n using the stability diagram. We obtain X/n $\sim<$ 200 ohm roughly independent of the energy. This condition is easily satisfied.

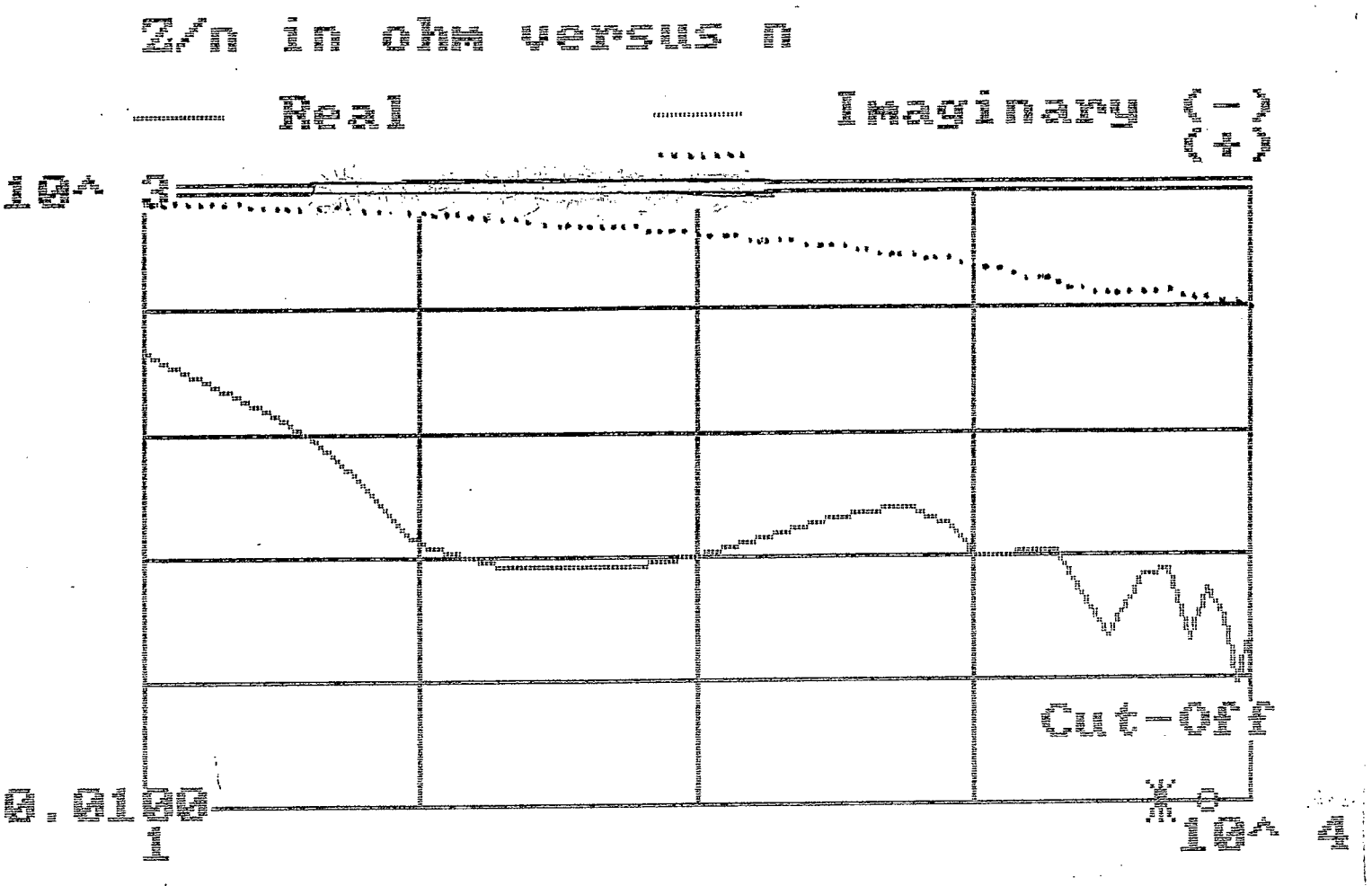

Fig. 1. Longitudinal coupling impedance in LEB at the injection energy of 600 MeV.

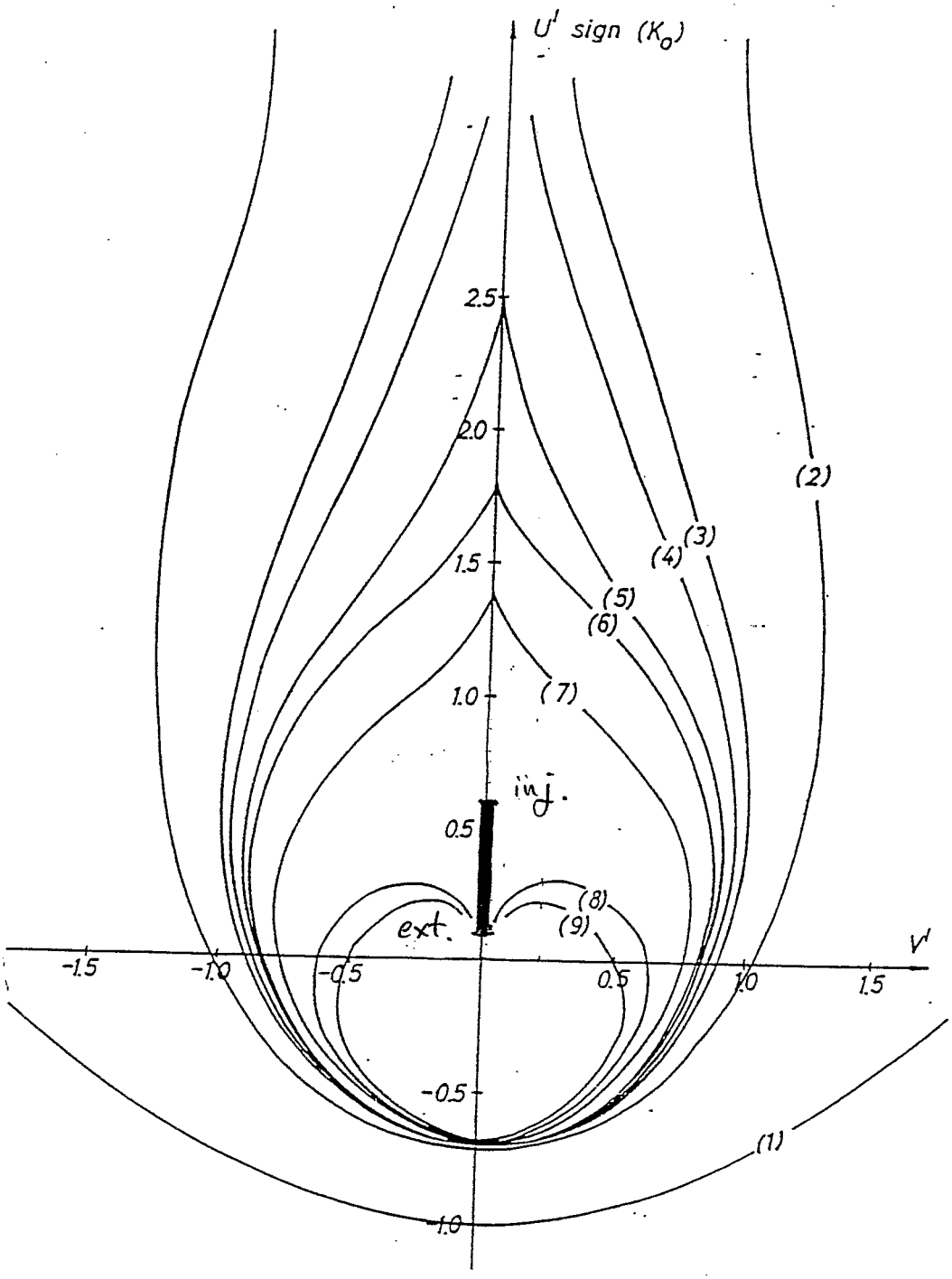

Fig. 2. Stability diagram. Distributions (1) Lorentzian, (2) Gaussian, (3) 5th–order parabolic, (4) 4th–order parabolic, (5) 3rd–order parabolic, (6) squared cosine, (7) 2nd–order parabolic, (8) truncated cosine, (9) 1st–order parabolic.