AD/RHIC-RD-9

Some remarks on feedback and feedforward employed to reduce beam induced voltages

(Mini-Workshop on RHIC RF Systems)

July 11-15, 1988
Collider Center

E. Raka
BNL

Some Remarks on Feedback
and Feedforward employed to
reduce beam induced voltage.

E. Raka
7/14/88

LOCAL RF FEEDBACK

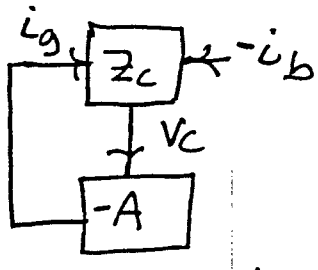

$$V_c = [i_b + i_g] Z_c = [-i_b - A V_c] Z_c$$

$$i_g = -A V_c \qquad V_c = \frac{-i_b Z_c}{1 + A Z_c} = \frac{-i_b 2\sigma s R}{s^2 + 2\sigma s + \omega_r^2 + 2 s \sigma A R}$$

Really $$V_c = \frac{-i_b Z_c}{1 + A Z_c e^{-s\tau}}$$

and one needs the roots of $(s^2 + 2\sigma s + \omega_r^2 + 2 s \sigma A R e^{-s\tau})$

$$\sigma = \frac{\omega_r}{2Q} = \frac{1}{\tau_c} \qquad \tau \text{ is loop delay} \quad AR = G \text{ (gain)}$$

Put $s = \alpha + j\omega$ and solve for roots with $\alpha = 0$ i.e. at stability limit.

$$-\omega^2 + \omega_r^2 + 2\sigma\omega G \sin\omega\tau + 2\sigma\omega j [1 + G\cos\omega\tau] = 0$$

$$G\cos\omega\tau = -1$$

$$G\sin\omega\tau = \frac{\omega^2 - \omega_r^2}{2\sigma\omega}$$

$$\tan\omega\tau = \frac{\omega_r^2 - \omega^2}{2\sigma\omega} \quad \text{or} \quad \omega\tau = \arctan\left(\frac{\omega_r^2 - \omega^2}{2\sigma\omega}\right)$$

or $$F(x) = \omega_r \tau x = \arctan Q\left(\frac{1 - x^2}{x}\right) \quad \text{where } x = \frac{\omega}{\omega_r}$$

With $$G^2 - 1 = \frac{[x^2 - 1]^2}{x^2} Q^2 \qquad \text{put } x = 1 + \delta x$$

to obtain

$$G^2 - 1 = \left(\frac{2\delta x + \delta x^2}{x}\right)^2 Q^2$$

which for $G \gg 1$ $\delta x \ll 1$ gives

$$G \cong 2\delta x Q$$

From Graph we have $\omega_r \tau \delta x \cong \pi/2$ so

$$G \cong \frac{2Q\pi}{2\omega_r \tau} = \frac{\pi}{2}\frac{\tau_c}{\tau}$$

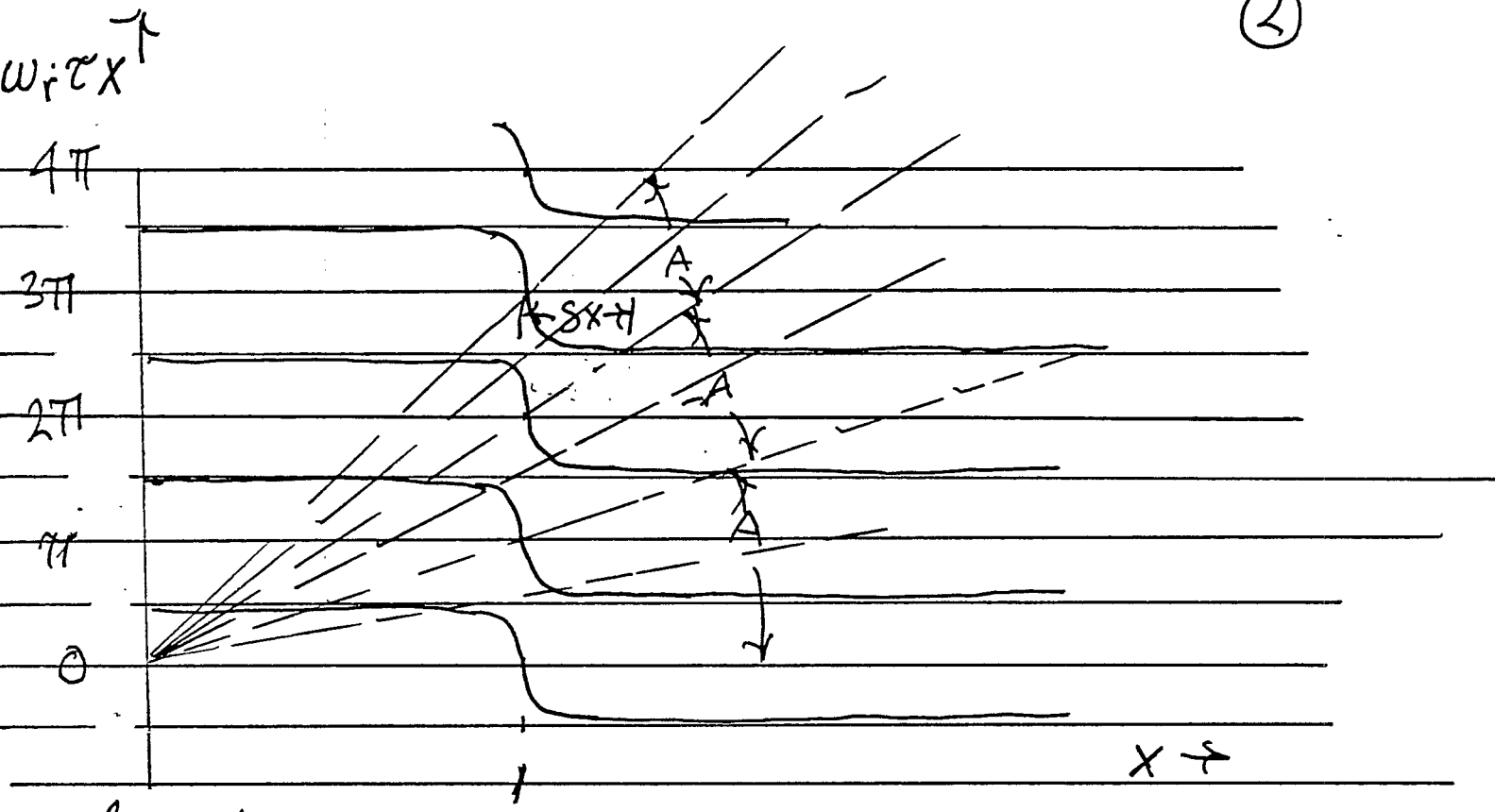

Thus for $\frac{G}{2} = \frac{\pi}{4}\frac{\tau_c}{\tau} = \frac{\pi}{4}\frac{2Q}{\omega_r}\frac{1}{\tau} = AR$

or $\frac{1}{A} = R_{min} = \frac{2}{\pi}\omega_r \frac{R}{Q}\tau$

Now in order to obtain the the roots for $G < G_{max}$ one must plot the curve

$$\frac{2s\sigma G}{s^2 + 2\sigma s + \omega_r^2} = -e^{j\psi}$$

for different values of G and $180° \leq \psi \leq 90°$ and find the intersection at the desired value of G with the line $e^{j\omega\tau}$ such that $\omega\tau + \psi = 180°$.

There will in general be a single real root with $\alpha < 0$ in addition to conjugate roots with $\omega \approx \omega_r$ and $|\alpha| > \sigma$

Also there will be conjugate roots at $\omega_n \pm n\omega$ where $\omega \approx 2\pi/\tau$ for $\tau > 1/f_r$ with $|\alpha| \gg \sigma$ and $n = 1, 2 \ldots$ (this assumes that G does not vary with ω of course)

Next let us include a feedforward signal to this configuration. We then will have $i_g = -AV_c + i_c$ where i_c is a current $\approx i_b$ so that one has

$$V_c = \frac{(i_c - i_b) Z_c}{1 + A Z_c e^{-s\tau}}$$

Thus the stability conditions are not altered and V_c can be made to approach zero even more closely for the same A.

Finally let us redraw our circuit and include the drive signals required for the storage mode (ignoring phase and tuning loops)

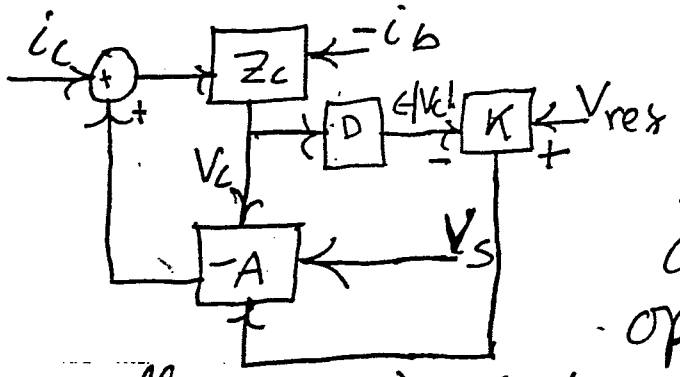

$$A = K(V_{ref} - \epsilon|V_c|)$$

During acceleration the amplitude control loop is open and $A = A_{max}$ & V_c is small (1-2 kV). At transfer the rf feedback is switched off the amplitude loop is closed and V_s with the proper phase and amplitude is applied. i_c which contains the beam current at $h = 2052 \pm$

several rotation sidebands ~~is~~ remains unchanged since it is required to compensate for the periodic transient beam loading due to the missing bunches.

The tuning and phase (average of all bunches) loops are also activated at this time.

We assume that during acceleration $\omega_r = h\omega_0$ i.e. that the cavity ~~are~~ tuning is programmed to track the ≈480 Kc frequency change that would occur for gold at top energy.

The gain-bandwidth of the amplitude loop ~~was~~ be considerably less here than that needed for the γ_s feedback loop.

It is evident now why we did not choose to add a compensation signal i_c/A at the V_s input (it must be independent of the gain control loop during storage!)

Feedforward With Amplitude Loop

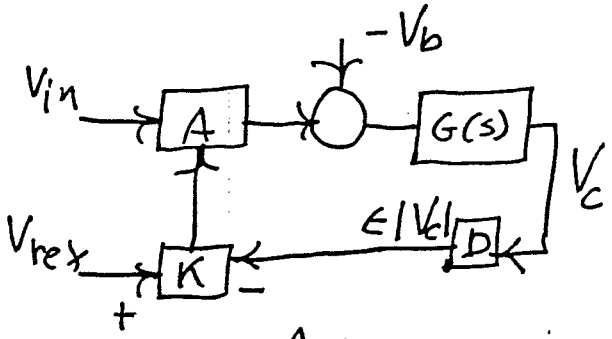

$$-V_b = -i_b R$$

$$A = K\left[V_{ref} - \epsilon|V_c|e^{-s\tau}\right]$$

$$A_0 = K V_{ref}$$

$$A_0 V_{in} = V_0 \cong V_b$$

$$V_c = G(s)\left(A V_{in} - V_b\right) = G(s) V_0 - K\epsilon G(s)|V_c| V_{in} e^{-s\tau} - G(s) V_b$$

or

$$|V_c| = \frac{G(s)\left[V_0 - V_b\right]}{1 + K\epsilon V_{in} G(s) e^{-s\tau}}$$

Hence

$$|V_c| \cong \frac{G(s)\left[V_0 - V_b\right]}{1 + \frac{K\epsilon V_b}{K V_{ref}} G(s) e^{-s\tau}}.$$

Put $\frac{\epsilon V_b}{V_{ref}} = K'$ and assume cavity is tuned so that $G(s) = 1/1+s\tau_c$ i.e. the transfer function for amplitude modulation of the carrier. Then one has

$$|V_c| = \frac{(V_0 - V_b)}{1 + s\tau_c + K' e^{-s\tau}}$$

Again put $s = j\omega$ with $\alpha = 0$ and solve;

$$K' \cos\omega\tau = -1 \qquad K' \sin\omega\tau = \omega\tau_c$$

and $$\tan \omega\tau = -\omega\tau_c$$
$$K'^2 = 1 + \omega^2\tau_c^2$$

Now we know that $G(s)$ can at most put in a $\pi/2$ phase shift in the loop so that the stability limit will occur when $\omega\tau \approx \pi/2$. Since $\tau_c >> \tau$

$\omega^2\tau_c^2 = \left(\frac{\pi}{2}\right)^2\left(\frac{\tau_c}{\tau}\right)^2 >> 1$ so that

$$K'_{max} \cong \frac{\pi}{2}\frac{\tau_c}{\tau}$$

which is the same result as for rf feedback except that τ is not required to be a multiple of the rf period.

In principal V_{in} can contain the components of i_b at $h = 2052 \pm m$ where m is <10 say as in the case of i_c. Again one would want the cavity always on resonance with 2052 fo and when transferring the bunches from the 26.7 MHz system excitation of the cavity would be as outlined above. Of course the amplitude loop shown here would have to be disabled at this time. We note here that the gain bandwidth of this loop would in general be much greater than that required to control the storage voltage levels.