BROOKHAVEN NATIONAL LABORATORY
Upton, New York 11973

Accelerator Division
Technical Note

AGS/AD/Tech. Note No. 346

RHIC-RD-25

RHIC RF SYSTEM NOISE REQUIREMENTS

E.C. Raka

November 2, 1990

RHIC RF System Noise Requirements

E.C. Raka

I. Introduction

The luminosity lifetime of high Z particle beams in RHIC will be limited by intra-beam scattering.[1] In the storage mode it is assumed that the rf phase space "buckets" will always be fully occupied. This is in contrast to SPS and Tevatron operation where the bunches occupy a fraction (<1/2) of the available phase space area. Thus although the expected storage time of ≈ ten hours in RHIC is considerably less than that achieved in these machines the allowable phase and amplitude noise of the RHIC storage rf system should be comparable to that obtained in the SPS. This is because the contribution to bunch diffusion from rf noise must be small compared to that arising from intra-beam scattering.

In the SPS the rf voltage is supplied by broad band traveling wave structures. In RHIC however very high Q standing wave cavities will be employed. The effect of the cavity time constant τ_c and its compensation in the phase and amplitude control loops on the rf noise requirements will be discussed in the first part of this report. In the second part the analysis of the SPS group[2,3] will be used to estimate the equilibrium distribution lifetime of the bunches due to rf noise. Finally the special problem of a varying small amplitude synchrotron frequency will be touched upon.

II. RF Noise and the One Dimensional Diffusion Equation

The effects of rf noise are similar to those due to intra-beam scattering. Slow growth occurs in the amplitude of the incoherent synchrotion oscillations of the particles within the rf "bucket". This results in an increase in the longitudinal phase space area occupied by the bunches and eventual particle loss once the bucket is filled. It has been shown[4] that if the action J of a particle is taken as the variable X in the Fokker-Planck equation then it reduces to a one dimensional diffusion equation

$$\frac{\partial \rho}{\partial t} = \frac{\partial}{\partial X}\left(\frac{A_2}{2}\frac{\partial \rho}{\partial X}\right) \tag{1}$$

where $D = A_2/2$ is the diffusion coefficient. If we take $X = J/\hat{J}$ then

$$D = A_2/2\hat{J}^2 = XS_1 + X^2S_2 \tag{2}$$

where $\hat{J}$ is the value of the action on the bucket boundary. For particle motion under a sinusoidal RF voltage the results for a linear RF voltage and finite difference equations can be generalized to give

$$S_1 = \frac{\omega_{So}^2}{4}\left(\frac{2K}{\pi}\right)\frac{\pi}{4}(1-k^2\alpha)\frac{\sum_{m=1,3--}\frac{m^4\sum_n S_\varphi(m\omega_s + n\omega_o)}{\mathrm{Cosh}^2(m\upsilon)}}{\sum_{m=1,3,5--} m^4/\mathrm{Cosh}^2(m\upsilon)} \tag{3a}$$

$$S_2 = \frac{\omega_{So}^2}{4}\left(\frac{2K}{\pi}\right)\frac{\pi}{4B}\alpha\frac{\sum_{m=2,4--}\frac{m^4\sum_n S_a(m\omega_s + n\omega_o)}{\mathrm{Sinh}^2(m\upsilon)}}{\sum_{m=2,4,6--} m^4/\mathrm{Sinh}^2(m\upsilon)} \tag{3b}$$

Now $\rho(X,t)dX$ is the probability of finding a particle between X and (X + dX) at time t. Here $k^2 = \sin^2(\Phi/2)$ where Φ is the peak phase excursion for a given X $\omega_S = \omega_{so}\pi/2K(k^2)$ with ω_{So} the small amplitude phase oscillation frequency and K,K' $B(k^2)$, $\alpha(k^2)$ are elliptic functions[5] ($\upsilon = \pi K'/2K$). $S\varphi$ and S_a are the spectral densities of the phase and amplitude noise at the cavity gap around the drive frequency ω_{Rf}. Equations 3a,b are valid for $\omega_S T_o << 1$ where $T_o = 2\pi/\omega_o$ is the rotation period. Then one also has $J = 2\ \omega_{so}\ k^2 4B/\pi$ and $\hat{J} = 8\omega_{so}/\pi$.

We assume that $\varphi(\tau)$ and a(t) are stationary random variables so that

$$V_{rf} = V_o(1 + a)\sin\Phi \quad \text{or} \quad V_{rf} = V_o \sin(\Phi + \varphi) \tag{4,a,b}$$

for pure amplitude and pure phase noise respectively.

For small values of k^2 and phase noise only one can show that under certain assumptions[3,6]

$$< \frac{dX}{dt} > \; = \; \frac{\omega_s^2}{4} S_1(\omega_s) \tag{5}$$

for a non-linear RF voltage. Hence given $S\varphi(\omega)$ it is possible to estimate the rate of growth of the bunch area for some initial value of $X = X_o$. The long term evolution of a bunch is obtained by solving equation 1 with the following boundary conditions.[4]

$$\lim_{x \to 0} (XS_1+X^2S_2) \frac{\partial\rho}{\partial t} = 0$$

and at $X = 1$; $\rho\ (X = 1,t) = 0$ which corresponds to particles being lost. In order to do this one must find the X dependence of S_1 and S_2. This will be discussed below;

III. Cavity Voltage Fluctuations

We shall assume that the noise source is due to stationary random fluctuations in phase or amplitude of the rf driving current $I_d(t)$ which we shall call $I(t)$; ($I << I_d$). Furthermore, we shall assume that the random voltage $V(t) = I(t)Z_c$ has a Fourier transform $\hat{V}(\omega)$. Then the noise spectral density $G(\omega)$ of $V(t)$ is given by[7]

$$G(\omega) = K|\hat{V}(\omega)|^2 \tag{6}$$

where K (a constant) has the dimensions of sec.$^{-1}$ In order to relate $V(\omega)$ to S_φ and S_a hence to S_1 and S_2 we need the transfer function $g(\omega)$ between $\tilde{V}(\omega)$ and $I(\omega)$. Therefore we consider a high Q resonant cavity tuned to the driving frequency i.e. $\omega_r = \omega_d$ with $I_d(t) = I_o e^{i\omega_d t}$. Then for any frequency $\Omega = \omega_d+\omega$ one can show that the transfer function $g(\omega)$ for small amplitude (a) or phase modulation (φ) at the frequency ω of I_d is given by

$$\tilde{V}(\omega) = \frac{\tilde{I}(\omega)}{1+s\tau_c} \tag{7}$$

where $s = j\omega$ and $\tau_c = 2Q\ell/\omega_r$ is the cavity time constant. If now we form:

$$\frac{G(\omega)}{V_o^2} = \frac{K|\tilde{V}(\omega)|^2}{V_o^2} = \frac{G_I(\omega)}{[1+(\omega\tau_c)^2]I_q^{\,2}} \tag{8}$$

where $V_o = I_o Z_r$, $gg^* |\tilde{I}|^2 = |\tilde{V}|^2$ and $G_I(\omega) = K|\tilde{I}|^2$ is the spectral density of the random current $I(t)$ for amplitude or phase noise respectively then

$$S_a(\omega) = |\tilde{a}(\omega)|^2 = \frac{G_I(\omega)}{[1+(\omega\tau_c)^2]I_o^2} \tag{9a}$$

for amplitude noise and

$$S_q(\omega) = |\tilde{\varphi}(\omega)|^2 = \frac{G_I(\omega)}{[1+(\omega\tau_c)^2]I_o^2} \tag{9b}$$

for phase noise.

Now for the h = 2052 cavities in RHIC we shall assume a $Q_\ell \cong 20{,}000$ so that $\tau_c = 2\times10^4/\pi h f_o \cong 3$To. Since the maximum synchrotron frequency ω_{So} is $\leq 2\pi 225$, $Q_S \leq 3\times10^{-3}$ one must have $\omega \geq 6\omega_{So}$ before the $1 + (\omega\tau_c)^2$ term in equation 9 makes a 10% difference. Thus for noise close to f_d there is not much attenuation due to the cavity time constant itself. Actually the control loops alter this situation considerably as will be discussed below. For noise at $f_d \pm f_o \pm 2 f_o$ etc: however, there is a considerable reduction: At $\pm f_o$ one has a reduction of greater than 25 db in $S\varphi$ or S_a and another 6 db for each additional f_o increase in ω.

Next let us consider the case of the SPS traveling wave cavities. The input impedance for these structures is proportional to $\sin(\tau/2)/(\tau/2)$ where $\tau = l(\omega-\omega_R)/\upsilon_g$. Here l is the length of the cavity, υ_g the group velocity and ω_R the frequency where there is no phase slip between the particles and the travelingwave.[8] In the SPS this was chosen to correspond to the transition energy. For simplicity we assume $\omega_d = \omega_R$ and again consider modulation about the drive frequency. One can write $g(\omega)$ as

$$g(\omega) = \frac{1}{2}\left[\frac{Z(\omega_r + \omega)}{Z(\omega_r)} + \frac{Z(\omega - \omega_r)}{Z(-\omega_r)}\right] \tag{10}$$

i.e. the sum over the upper and lower sidebands. Thus we obtain $g(\omega) \sim \sin(\omega l/2\upsilon_g)/(\omega l/2\upsilon_g)$ so that

$$gg^* = \frac{\sin^2(\omega\tau_\ell/2)}{(\omega\tau_\ell/2)^2} \tag{11}$$

where $\tau_\ell = l/\upsilon_g$ is the equivalent of the cavity time constant. In the SPS, $\tau_\ell = 0.7$ μsec while $T_o \cong 23$μsec. hence the bandwidth of these cavities covers a large number of rotation frequency lines i.e. $\pm f_o \pm 2f_o \pm$ ----$\pm$ n f_o where $n \cong 200\pi/43.2 = 14.5$. Thus there is a significant difference between the SPS and RHIC for noise that is separated from f_{rf} by f_o or greater. The implications of the result will be discussed in the section on phase and frequency loops.

IV. Cavity Amplitude Control Loop

In the usual control loop one has the reference voltage V_R and the measured gap voltage V_g and forms the difference $(V_R - V_g)$ which is then multiplied by some loop transfer function $F_a(\omega)$ and $g(\omega)$. Using the Laplace transform of these quantities then one can write

$$\tilde{V}_g = \frac{F(s)g(s)\tilde{V}_r}{1+Fg} = \frac{\tilde{V}_r F^*}{1+F^*} \tag{12}$$

where $F^* = F(s)g(s)$. Generally one puts $F = A(1 + s\tau_c)/(1 + s\tau)$ where $\tau < \tau_c$ so that $F^* = A/(1 + s\tau)$; A being the loop gain. It is assumed here that the desired loop bandwidth is such that $\tau = 1/\omega_b$. Then equation 12 can be written as

$$\tilde{V}_g = \tilde{V}_r \frac{[A/(A+1)]}{[1+s\tau/(A+1)]} \tag{12a}$$

so that V_g can be made to track V_r quite closely. Of course noise in V_r will appear directly in V_g and hence the reference source must be very "quiet". If we now assume a noise source a_i referred to the power amplifier then one can write

$$\tilde{V}_g = \frac{\tilde{a}_i g}{1+F^*} = \frac{\tilde{a}_i}{[1+A/(1+s\tau)]} \frac{1}{(1+s\tau)} \tag{13}$$

Hence for those frequencies where $\omega\tau < 1$ the amplitude control loop will suppress this noise to a considerable extent. The choice of A and τ will depend upon other loop parameters since the overall stability and transient response must be considered.

From the above analysis we see that as far as amplitude noise within the bandwidth of the amplitude control loop is concerned there is little difference between the RHIC case and the SPS case.

In the latter the principal source of noise was due to the power amplifier contribution and this was limited to frequencies below $f_o \cong 43$Kc. Hence we shall use the measured value of a_{rms} quoted in reference 3 for our beam lifetime calculations.

V. Phase and Frequency Control Loops With Cavity

Figure 1 is a simplified diagram of the phase and frequency loops employed in the SPS for $\bar{p}p$ operation.[2] We have added the cavity transfer function g(s) which is the same for phase or amplitude modulation when there is no detuning. Here K is the gain of the Voltage Controlled Oscillator in kc /volt; $B = s/(s^2 + \omega_{do^2})$ G_f is the gain of the frequency discriminator and $\dot{\theta}_{rf}$ is the VCO and power amplifier frequency noise referred to the cavity input; $\delta\theta_p$ is the phase detector noise and $\dot{\theta}_f$ the frequency reference noise. If $\dot{\Phi}_c$ is the frequency noise at the cavity then using the Laplace transform we can write

$$\tilde{\dot{\Phi}}_c = \frac{g\tilde{\dot{\theta}}_{rf} + Kg\delta\tilde{\theta}_p + KG_f g\tilde{\dot{\Phi}}_f}{1+gKB+gKG_f} \tag{14}$$

Again one usually puts $K = A(1 + s\tau_c)/(1 + s\tau_o)$ where $\tau_o < \tau_c$ (A can contain other time constants) so that the loop response is independent of the cavity time constant. Then $K' = gK = A/(1+s\tau_o)$ and we can write

$$\tilde{\dot{\Phi}}_c = \frac{g\tilde{\dot{\theta}}_{rf}+K'\delta\tilde{\theta}_p+K'g_f\tilde{\dot{\theta}}_f}{1+K'(B+G_f)} \tag{14a}$$

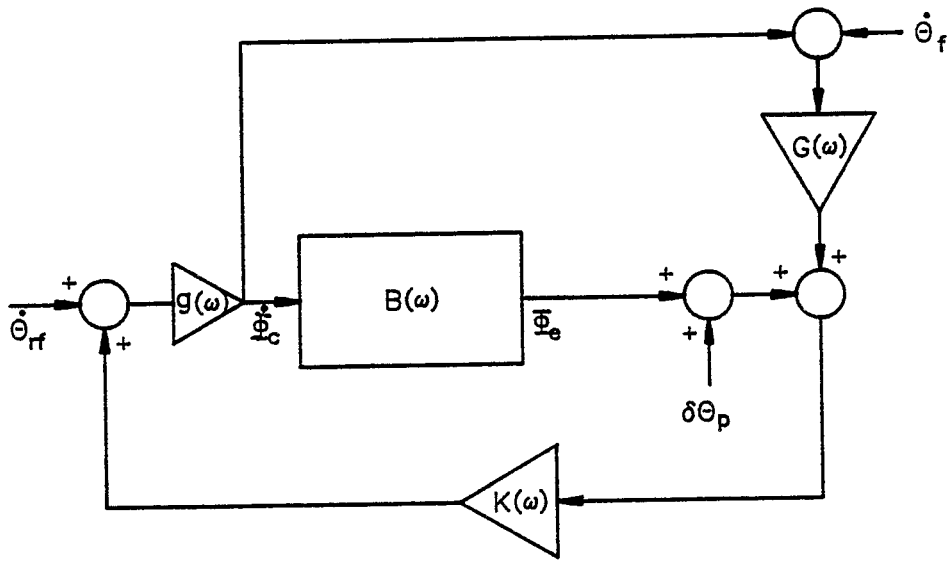

Figure 1. Simplified Phase & Frequency Loops With Noise Source

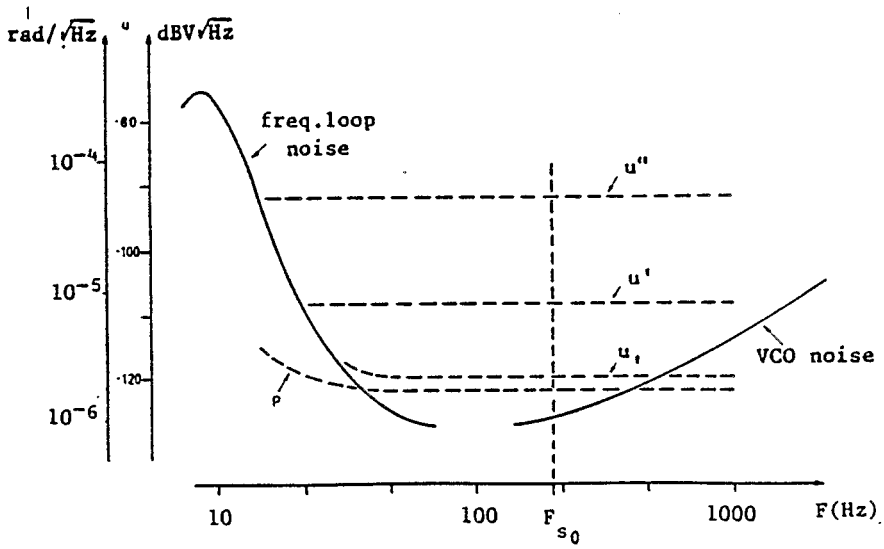

Figure 2. Noise levels measured in the RF system

which is essentially the result given in references 2,3. For $\omega << \omega_{So}$, $G_f >> 1$ and the frequency loop noise dominates (see Figure 2). For $\omega_o > \omega >> \omega_{So}$, $\dot{\theta}_{rf}$ dominates while in the region around ω_{So} the phase detector noise dominates if the loops are designed properly. We note that any noise at $\pm f_o$ $\pm 2 f_o$ etc. appears directly on the cavity but multiplied by $g(\omega) = 1/(1 + j\omega\tau_c)$. Since the bunches sample the gap voltage at a rate given by f_o this noise contributes to S_1 and hence to the overall dilution. Furthermore it will be different for different bunches. In the case of the SPS $\bar{p}p$ system due to the wide bandwidth of the traveling wave structures this effect could not be ignored. The main phase loop was locked to a single proton bunch which then supressed the VCO noise at $f_{rf} \pm \omega_s$ for all the proton bunches and at $f_{Rf} \pm f_o \pm 2f_o$ etc. for the control bunch. In order to control the effects of the noise around the rotation harmonics, present in the VCO output and within the "cavity" bandwidth, on the other bunches it was necessary to employ separate control loops for the other two proton bunches.

In Figure 3 we show the single sideband phase noise of the SPS $\bar{p}p$ VCO.[6] This is an improved version of the original circuit which had greater noise for large frequency offsets. We note also that the phase detector noise[3] shown in Figure 2 is considerably lower than in the original version.[2] Assuming that the same type of system will be employed in RHIC we are interested in the noise at $\pm f_o$, $\pm 2f_o$ etc. seen by those bunches whose phase error is not sampled by the main control loop. Since the cavity bandwidth is much narrower the situation is more favorable than in the SPS (without the additional loops). Taking $f_m = f_o = 78KC$ we obtain from the curve in Figure 3 an $L(f_o) = -143dBc$ while $|g(f_o)| \cong 1/20$. Using the relation $S_\varphi = 2L(fm)$ where S_φ here means the power spectral density for phase modulation of the VCO, and $S_f = f_m^2 S_q$ where S_f is the corresponding spectral density for frequency modulation[9], we can calculate $\dot{\Phi}_c(\omega_o)$ from $g\dot{\theta}_{rf}(\omega_o)$ where $g\dot{\theta}_{rf}(\omega_o) = 2\pi\times 78\times 10^3\times\sqrt{2\times 10^{-14}/2}\ /20 = 2.45\times 10^{-3}$ rad/sec/$\sqrt{Hz}$.

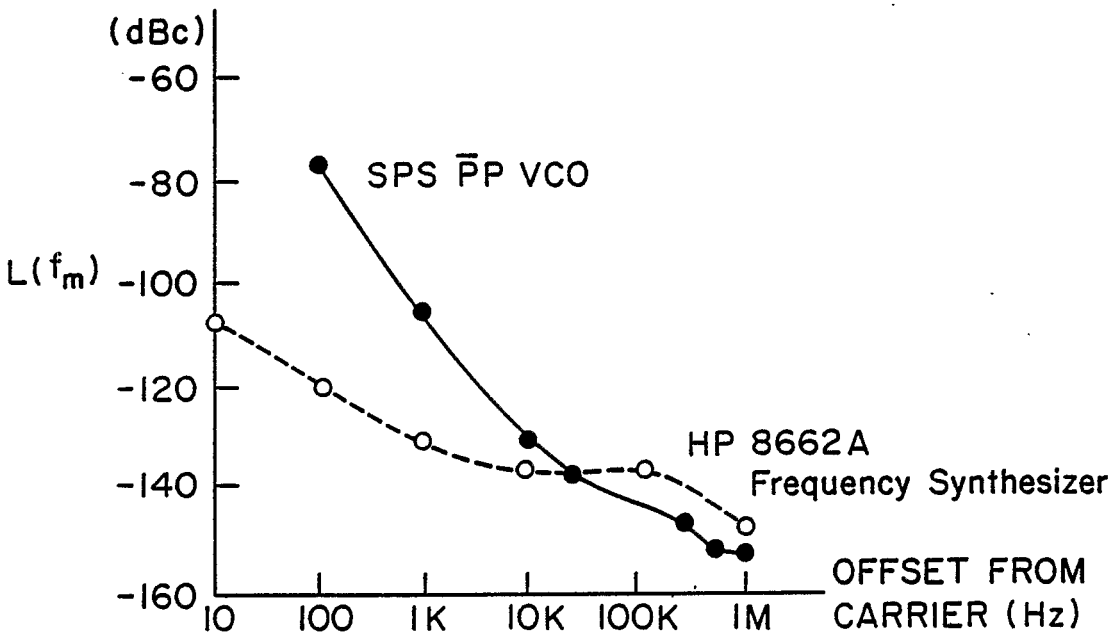

Figure 3. Single Sideband Phase Noise of SPS $\bar{p}p$ VCO

Next we want to compare this noise to that seen by the control bunch or bunches. As pointed out above the principal contribution $\delta\theta_p$ comes from the phase detector. The noise around $f_{rf} \pm f_o$, $\pm 2f_o$ etc. appears to a single bunch as equivalent to the noise around f_{rf} itself since it samples the cavity voltage at f_o. Hence, it is reduced by the same control loop gain factor. This noise should be added quadratically since there is no correlation between the VCO output at f_{rf}, $f_{rf} \pm f_o$ etc. In order to find $\dot{\Phi}_c$ from equation 14a we must evaluate $\delta\theta_p/B$ in the neighborhood of $\omega \approx \omega_{So}$. The simple relation $B = j\omega/\omega_{so}^2 - \omega^2)$ is not valid here except in the limit that all the particles within the bunch have the same synchrotron frequency. Instead one must use the bunched beam dispersion integral in evaluating the open loop transfer function $B(\omega)$ between $\dot{\Phi}_c$ and the output of the phase detector.[10] We then

obtain $\delta\theta_p(\omega_{So})S$ where $S < \omega_{So}$ is the synchrotron frequency spread within the bunch. For the case where $V_{rf} = 4.5$Mv, $\omega_{So} = 2\pi 225$ and using the SPS value for $\delta\theta_p(\omega_{So}) = 1.6 \times 10^{-6}$rad/$\sqrt{\text{Hz}}$ we obtain $\dot{\Phi}_c(\text{rms}) < 2.25\times10^{-3}\cdot(\text{rad/sec})/\sqrt{\text{Hz}}$. Since this is essentially the same as that seen by those bunches outside the loop due to VCO noise at $\omega = \pm f_o$ it seems possible that it will not be necessary to employ any additional feedback on these bunches to control their dilution. Of course it would be desirable to further lower the noise of the VCO output at large frequency offset if possible.

Now if the phase loop controlling the VCO were locked on to a single bunch any bunch diametrically opposite to it will actually see twice the 2.45×10^{-3} rad/sec/$\sqrt{\text{Hz}}$ calculated above. This is because as pointed out above the main phase loop will correct for noise around $f_{rf} \pm f_o$ etc. (we have assumed that in the RHIC case noise at $\pm 2f_o$ and etc can be ignored) and this correction would be 180° out of phase relative to that required to cancel the VCO noise at $f_{rf} \pm f_o$ seen by the diametrically opposite bunch when it passes the rf gaps. Bunches close to the control bunch will see very little difference in noise forms it i.e. only the phase detecter noise which of course all of the bunches see. The latter should be added in quadruture of course with the other noise since they are not correlated.

Another option would be to lock the main phase loop to the average phase error of all the bunches when in the storage mode. The bandwidth of the phase detector would be $< \omega_o$ and the effects of noise at $f_{rf} \pm f_o$ would not be present in its output. Thus all of the bunches would see the same phase detector noise and the same uncorrected VCO noise around $f_{rf} \pm f_o$.

VI. Bunch Diffusion Rate and Equilibrium Lifetime

As pointed out above one can show[1,2] that on a time scale Δt short compared to the diffusion process but still containing many phase oscillation periods.

$$\left\langle \frac{\Delta X}{\Delta t} \right\rangle = A_1 \tag{15}$$

where $A_1 = (\partial/\partial X)\,(A_2/2) = S_1 + 2XS_2$. Here ΔX is proportional to the emittance growth of the bunch which is always assumed matched to the bucket. Since A_1 is some function of X one can write $X = X_o + A_1(X_o)t + \text{-----}$ for some initial value of X and small $t \approx \Delta t$ and hence obtain a nominal time τ in which X would double in magnitude[12]

$$\tau \cong \frac{X_o}{S_1(X_o)} \tag{16}$$

for phase noise alone.

Now when the bunch grows enough to fill the bucket X = 1 on the separatrix and particle loss occurs. At that point the particle density ρ vanishes and the boundary condition $\rho(X = 1) = 0$ must be satisfied by any solution of the diffusion equation (1). Dome[4] has obtained analytic solutions of this equation for pure phase or amplitude noise by assuming specific expressions for $S_1\xi(X)$ or $S_2(X)$. The CERN group believes that S_2 = constant and S_1 = constant with no phase loop or $S_1(1 - X^2)^{-2}$ with a phase loop represent choices that give lifetimes and bunch shapes that are consistent with their measurements.[2,3,6,11] It is estimated that amplitude noise lifetime in the SPS $p\bar{p}$ is greater than 200 hours and that the phase noise lifetime is in the range of 200-400 hours with control loops operating and the improved VCO.[3]

We see then that if we can achieve similar noise figures in the RHIC storage rf system which will operate at 160 MHz as compared to 200 MHz in the SPS then it will not significantly effect the luminosity lifetime. However the question of whether or not more than one phase control loop is required needs further discussion. As pointed out above it is the noise around $\pm f_o$, $\pm 2f_o$ etc. that would contribute to the growth of those bunches not included in the main phase loop. We have shown that for the RHIC cavities this will be comparable to that seen by the control bunch even without additional control loops. As a check on this result we will calculate the doubling time τ and the equilibrium lifetime for the bunches outside of the main loop in the SPS using figure 3 and assuming no auxillary phase loops.

For S_1 we use equation 3a where one must sum over m and n. Since $\omega_S << \omega_o$ we assume that for any $m \leq 11$, S_Φ is constant for a given value of n and hence only the sum over the latter is important. Using the relation that $S_\Phi = 2L(f_m)$ and Figure 3 we find $L(f_1) \cong -141$db, $L(f_2) \cong -143$, $f_3 = -144$, $f_4 = -146$ $f_5 = -147$ and $f_6 = -148$ we obtain

$$\sum_{\ell=1}^{6} S_\Phi(\ell\omega_o) = 2 \cdot 2.4\times10^{-14} \text{rad}^2 \text{ /Hz.}$$

We take $X_o = k_o^2 = .945$ corresponding to a bunch 320° wide and using equation 16 with $f_S = 180$Hz one obtains ($\omega_S = \omega_{So}/2$ here)

$$\tau = \frac{.945\times4}{4\pi180^2.76\times4.8\times10^{-14}} = 22.5\times10^3 \text{ Hours}$$

or 5% in $\approx 1 \times 10^3$ hours. Using the same value of S_φ and equation 3a for S_1, J. Wei has solved the diffusion equation numerically and obtained an equilibrium lifetime of $\approx 20 \times 10^3$ hours for the SPS parameters. For a diametrically opposite bunch both these results should be divided by a factor of two. Hence in principal with the present VCO noise figures the SPS even with its wideband rf system should not require additional control loops.

A final remark about the small amplitude synchrotron frequency which for Gold will vary from ~57–225 Hz during storage. Since it will pass through 60 Hz, 120 Hz, 180 Hz extra care should be taken to minimize voltage and current ripple with control circuitry at these frequencies. Of course the phase and amplitude control loop will have considerable gain at these frequencies so that noise sources outside of the loops can be compensated for. Also since the effect on emittance growth is ~ ω_s^2 the contribution at 60~ will be much less for the same S_φ than for the 225 Hz used in our lifetime calculations.

Addendum

Recent intra-beam scattering calculations by J. Wei indicate that it may be more desireable to employ the maximum available rf voltage at the beginning of the storage cycle. In this case the initial bunch area of 0.3 eVsec/AMU for a Gold would only ocupy 20% of a 4.5 MeV bucket at h = 2052. Hence the effects of rf noise could be completely ignored until

after the several hours required for intra beam scattering to fill the bucket had passed. Then the lifefime calculations for a full bucket would apply. Clearly this scenario is more favorable than the previous one vis-a-vie the effects of rf noise or the luminosity lifetime. Also the synchrotron frequency would remain far away from 60Hz so that the effects of power supply ripple would be even less of a potential problem.

References

1. M.J. Rhoades–Brown, J. Claus; Particles Losses in RHIC Due to Intrabeam Scattering Out of the Momentum Aperture. BNL ADD AD/AP-16; Jan 1990.
2. D. Boussard, G. Dome, C. Graziani, The Influence of RF Noise on the Lifetime of Bunched Proton Beams, Proc. 11th Int. Conf. on High1th Int. Conf. on High1th Int. Conf. on High1th Int. Conf. on High1th Int. Conf. on High1th Int. Conf. on High1th Int. Conf. on High1th Int. Conf. on High1th Int. Conf. on High1th Int. Conf. on High1th Int. Conf. on High Energy Accelerators, (ERN, July 1980, p.620.
3. D. Boussard, T. Linnecar, RF Noise Performance of the CERN Proton Antiproton Collider, Proc. 12th Inter Conf. on High Energy Accelerators, Fermilab, Aug 1983, p.226.
4. G. Dome, The SPS Acceleration System, Proc. 1976 Proton Linac Conf. Chalk Ruilr, Canada.
5. Jahnke and Emdl, Table of Functions, Dover, 1945.
6. D. Boussard, RF Techniques for $\bar{p}p$, CERN Accelerator School, September 1983 and CERN/SPS/84-2 (ARF).
7. V.K. Neil, R.K. Cooper, Particle Accelerators 4 75, 1972.
8. G. Dome, Theory of RF Acceleration and RF Noise, CERN Accelerator School Sept. 1983 and CERN/SPS 84-14.
9. Understanding and Measuring Phase Noise with Frequency Domain, H.P. Application Note 207, Oct 1976.

10. E. Raka, RF System Considerations for a Large Hadron Collider, AIP Conf. Proceedings 184, p.288 and BNL 41931.

11. D. Boussard, RF for the CERN Proton-Antiprotron Collider, AIP Conf. Proceedings 153, p. 1681.

12. S. Chattopadhyay, RF Noise Considerations for that Superconducting Super Collider, Accelerator Physics Issues for a Superconducting Super Collider, Ann. Arbor Dec. 1983, U. Michigan Report UMHE84-1.