AD/RHIC/RD–106

RHIC PROJECT

Brookhaven National Laboratory

ATR Power Supplies

Don Bruno

September 1996

TABLE OF CONTENTS:

I. Introduction 3

II. Description of ATR (AGS to RHIC) Power Supplies 5

III. PLC Network 7

IV. Geographical Layouts of Power Supplies and PLC Racks 8

V. Power Supply Analog Controls 13

VI. Geographical Layouts of Power Supplies and Analog Controls 15

VII. Switching Magnet Power Supply 20

VIII. Tables & Lists
A. Power Supply DC Current Limit and AC current 24
B. Load Resistance 28
C. Current Ripple and Magnet Inductance 32
D. Power Supply Stability with Beamline Load 35
E. Power Supply Stability with Dummy Magnet Load 36
F. Refurbished AGS Power Supplies Regulator Card Modification 37
G. Power Supply-Interface Card Serial Numbers 39
H. Buffer Board Modifications 42
I. PLC Module Spares 43
J. Power Supply-PLC Rack Associations 44
K. Detailed Power Supply Modification Summary 50
L. AC Power Estimate for ATR Line 52
M. ATR PLC Rack Cross Reference List 54

APPENDIX:

Section A: 1MW Power Supply and Switching Magnet Power Supply Ripple Filter Design . . . 56

Section B: 1MW Power Supply Ground Fault System 64

Section C: 1MW Power Supply Feedback Loop Analysis 66

Section D: Power Supply Houses One Line Diagrams 76

Section E: PLC Data Highway Plus and Remote I/O Layouts 81

Section F: Power Supply Analog Controls and Computer Interface Layouts 83

Section G: Switching Magnet Power Supply Reversing Switch Electronics 87

Section H: Magnet Application Program (Pagetree) Example 90

I Introduction:

The ATR (AGS to RHIC Transfer Line) is fed beam from two synchrotron rings. The first synchrotron ring is the Booster which receives protons from a 200MeV Linac and can achieve a proton energy of 1.5GeV. The Booster can also receive heavy ions from a 15.5MV Tandem Van de Graaff. The Booster is about $^1/_8$ of a mile in circumference. The Booster then feeds the AGS (Alternating Gradient Synchrotron) which can achieve a proton energy of 29.5 Gev. The AGS is about ½ of a mile in circumference. The AGS then kicks the beam out to the ATR line which will eventually feed RHIC (Relativistic Heavy Ion Collider) beam starting with the sextant test in December of 1996. The ATR line is about ½ mile long. The ATR line is made up of the upgraded U-line, new W, X and Y lines (see Figure 1). The test in November and December of 1995 transported beam from the AGS to the end of the W-line into a beam stop. During the normal operation of RHIC there will be a switching magnet at the end of the W-line which will bend beam into the X-line and then into the Y-line so that the two beams in RHIC will be rotating in opposite directions.

The upgraded U-line starts out with 7 magnets in the AGS ring. These magnets consist of 3 quadrupoles, 2 trim dipoles, and 2 gradient type dipoles. The 2 gradient dipoles are connected in series and make up the 4.25° degree bend. The ATR line has a total of 5 big horizontal bends (4.25°, 8°, 20°, 90°, 90°). The remaining magnets in the upgraded U-line in the ATR tunnel are 10 quadrupoles, 5 trim dipoles, and 4 gradient type dipoles connected in series which make up the 8° bend.

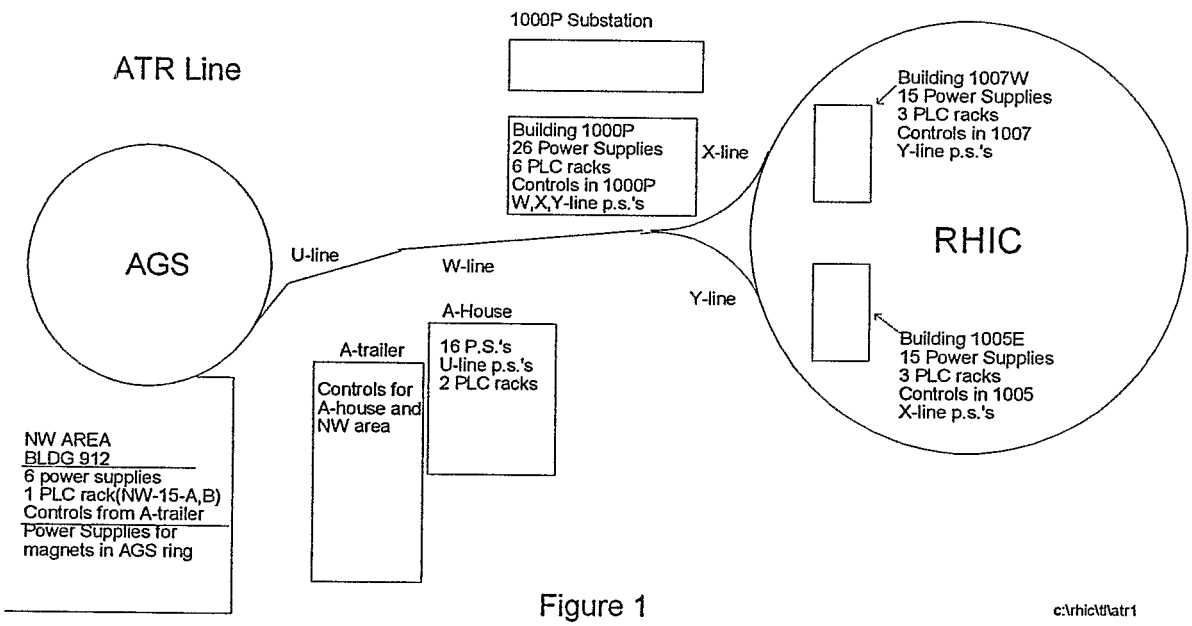

Figure 1

c:\rhic\tl\atr1

The U-line then leads into the W-line which is made up of 6 quadrupoles, 6 trim dipoles, 2 pitching dipoles, and 8 gradient type dipole magnets which make up the 20° bend. The W-line then feeds both the X and Y lines. The X and Y lines are mirror images of each other. Each one contains 6 quadrupoles, 6 trim dipoles, and 32 gradient type dipoles. The 32 dipoles make up the 90° bend. The accuracy of all the power supplies is generally ±0.01% for the large dipoles and quadrupoles and ±0.1% for the trim dipoles.

II. Description of ATR Power Supplies:

The ATR line is comprised of 80 power supplies, 17 of these power supplies are older AGS power supplies which have either been upgraded or reconstructed. The remaining 63 power supplies were purchased new. These power supplies range from bipolar 600 watt linear type trim magnet power supplies to 1 Megawatt (SCR type) dipole power supplies. SCR and linear are the two types of power supplies in the ATR line.

The power supply categories in the ATR line are:

1. New 25kwatt (50V/500A) SCR type quadrupole p.s.'s (17)
2. New 15kwatt (50V/300A) SCR type quadrupole p.s.'s (14)
3. New 600watt (30V/20A) linear bipolar trim p.s.'s (28)
4. New 2kwatt (20V/100A linear bipolar trim p.s.'s (4)
5. Modified 16kwatt (40V/400A) SCR trim p.s.'s (7)
6. Modified 50kwatt (125V/400A) SCR type quadrupole p.s.'s (2)
7. Modified 150kwatt (50V/3000A) SCR type dipole p.s. (1)-8° bend
8. Modified 216kwatt (90V/2400A) SCR type quadrupole p.s.'s (2)
9. Modified 470kwatt (130V/3600A) SCR type dipole p.s. (1)-4.25° bend
10. Modified 450kwatt (125V/3600A) SCR type dipole p.s. (1)-20° bend
11. Refurbished 1 Megawatt (350V/3200A) SCR type dipole power supply (2)-90° bends
12. Refurbished 375kwatt (125V/3000A) SCR type reversible dipole power supply (1)

All of the SCR type power supplies are 6 pulse power supplies. The linear type power supplies use MOSFET technology to regulate the DC output of the power supply.

For the dipole and quadrupole power supplies listed as modified the modifications were as follows:
1) A DCCT (dc current transformer) replaced a shunt for improved regulation.
2) The regulator card was modified to accept the DCCT.
3) The p.s. controls were upgraded. The p.s. was modified for OFF/STANDBY/ON operation and it was interfaced to a PLC (Programmable Logic Controller) which communicates with a higher level computer and has a redundant main interlock string in the PLC to protect the p.s.

For the refurbished power supplies:
1) For the 1MW power supplies the old transformer (2400v/300v) was removed and a new outdoor transformer (13.8kv/300v) was purchased to replace it. A refurbished contactor from the old AGS RF system is now the switch for the primary AC power. The SCR bridges were not altered since they were installed brand new in 1985. A new ripple filter was designed, installed and tested. See the Appendix Section A design details of the ripple filter. A more sensitive ground fault circuit was designed. See the Appendix Section B for details on the ground fault circuit and Section C for the 1MW power supply feedback loop analysis. The 1 MW's were also interfaced to a PLC.

2) For the 375kw power supply the only original parts are the enclosure and the choke. A new contactor and AC fuses were installed. A new transformer was installed. A new SCR bridge, new ripple filter and a new SCR reversing switch were designed, tested and installed. See the Appendix Section A for design details of the ripple filter. The 375kw had brand new PLC-based controls installed.

For the 16kwatt trim dipoles the modifications were:
1) The p.s. controls were upgraded. The p.s. was modified for OFF/STANDBY/ON operation and it was interfaced to a PLC (Programmable Logic Controller) which communicates with a higher level computer and has a redundant main interlock string in memory to protect the p.s.
2) A mechanical reversing switch was purchased and added to these p.s.'s so they could be used as bipolar power supplies for vertical trims or horizontal trims.

For all the p.s.'s (except trims):
1) A 16 bit A/D-D/A card was built and added to the p.s. to receive the reference from a fiber and send the p.s. readbacks to the fiber. The fiber was fed from a Waveform Generator (WFG).
2) A buffer board was built and added to the p.s. to send the same readbacks to an MADC (Multiplex Analog to Digital Converter) for "rapid" digitization.

For all the trims:
1) A 12 bit D/A card was built and added to the p.s. to provide the analog reference.
2) A buffer board was built and added to the p.s. to send the readbacks to an MADC for readback and digitization.

Electrical Networks:
The electrical networks for all the power supply houses were either upgraded or rebuilt. In the A house new disconnects were installed (including an 800Amp main disconnect), power was fed to the A-trailer for control racks, vacuum racks, and beam instrumentation racks. Air conditioning units were also installed at the A-house. Building 1000P had a new substation built. This substation includes 2-1500KVA transformers which feed the 2- 1Megawatt arc power supplies. All new disconnects and circuit breaker panels were also installed in building 1000P because none or little existed. Buildings 1005 and 1007 also had new disconnects and circuit breakers installed. Figures 29-32 in the Appendix Section D are the one line diagrams for the A-house, Building 1000P, Building 1005 and Building 1007.

III.PLC NETWORK

A PLC network was set up to monitor all of the power supplies and send commands to all of the power supplies in the entire ATR line. Allen Bradley PLC's were used. The 5/12 PLC was used to control up to 4 p.s.'s. The 5/12's then communicated with a higher level 5/40 which acts as a master to the 5/12 slaves. The 5/40 is a VME type PLC which acts as an interface between the VME and the 5/12 field devices. There are a total of 4- 5/40's, and 25-5/12's in the ATR line. All of the PLC's are connected on the Allen Bradley Data Highway Plus (DH+) network. (See Appendix Section E Figure 33). The VME crates include the AGS/RHIC suns networked front end computers that control the beam line via the high-level application code (pet pages). See the Appendix H for a look at the magnet application page that is used to run the power supplies.

The DH+ network ties all the PLC's together and allows a computer, running the Allen Bradley software to monitor and/or program the PLC's from any location. The 4 PLC/VME 5/40's act as 4 separate Masters. These 4 Masters communicate with their slaves over the Allen Bradley Remote Input/Output Network (R I/O) as shown in Figure 34 in the Appendix Section E.

IV. Geographical Layouts of Power Supplies and PLC Racks

The following section contains drawings of each power supply house and the connections

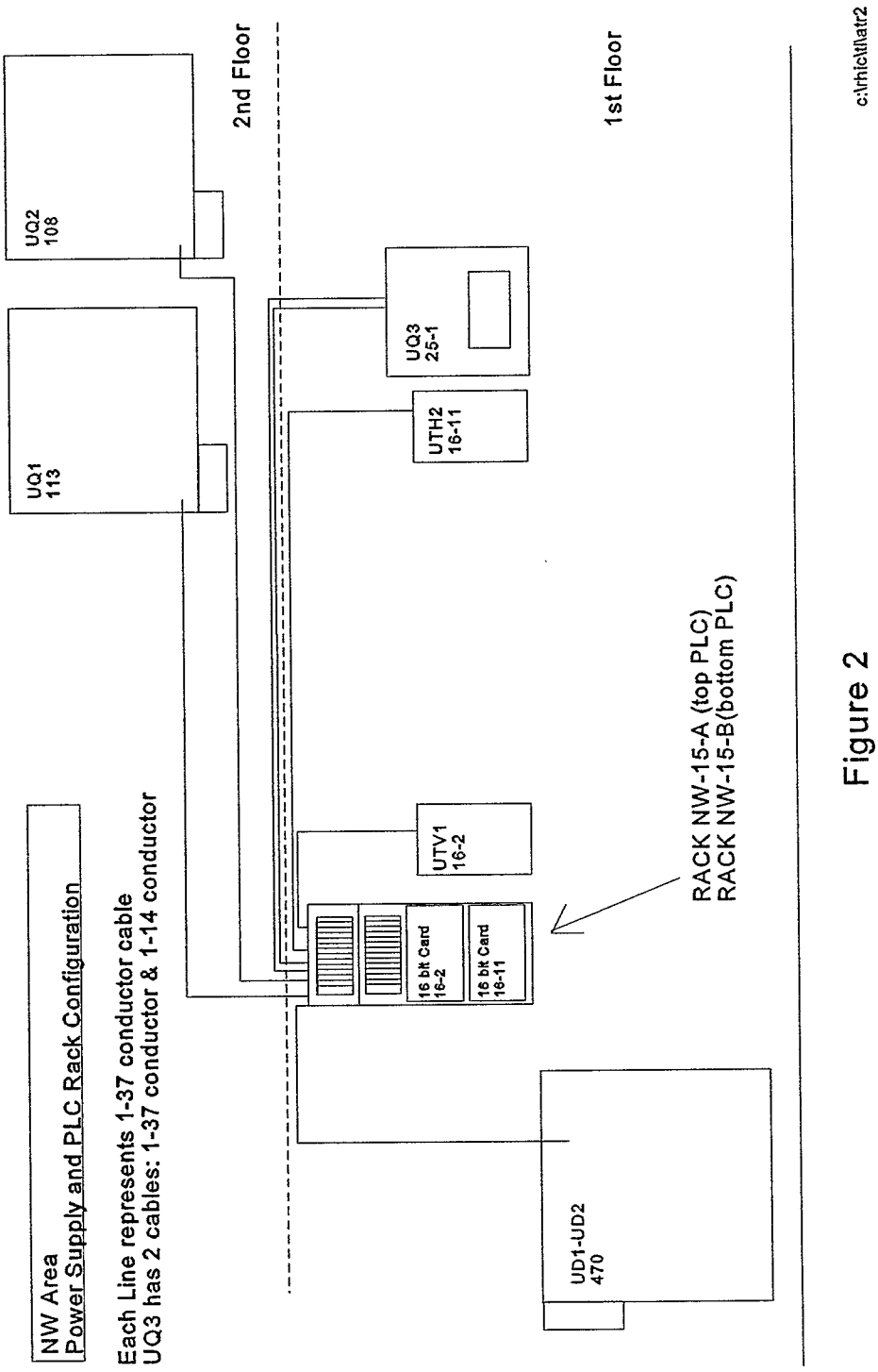

Figure 2

between the PLC's and the power supplies. Figure 2 is a drawing (not to scale) which shows the Northwest Area and the ATR power supplies and PLC's it contains. Figure 3 is a drawing of the A house PLC's and power supplies. Figure 4 is building 1000P.

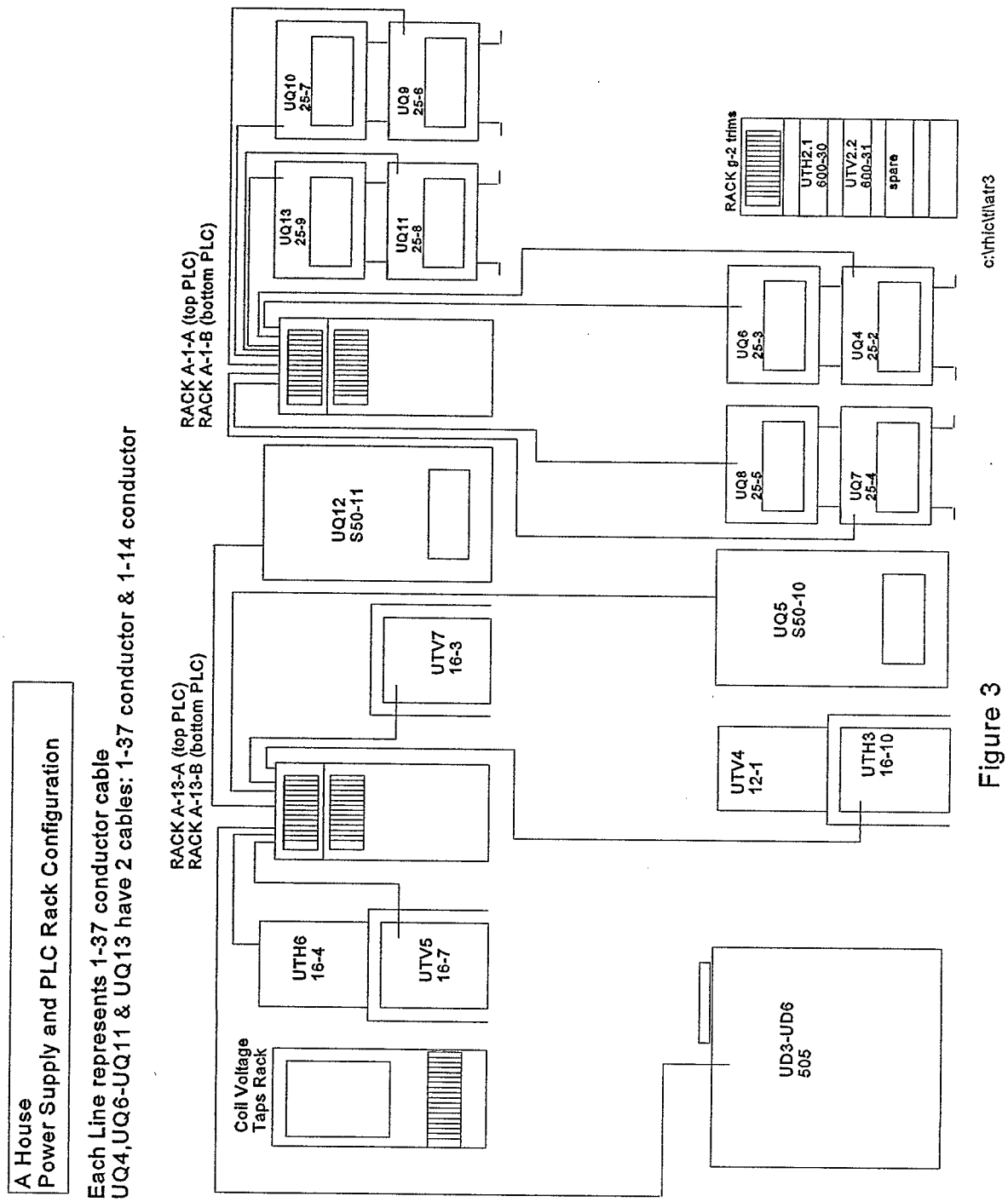

Figure 3

Building 1000P
Power Supply and Rack Configuration

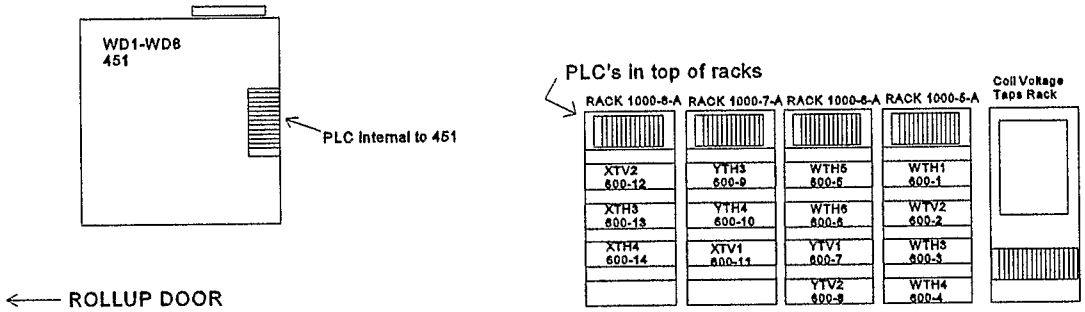

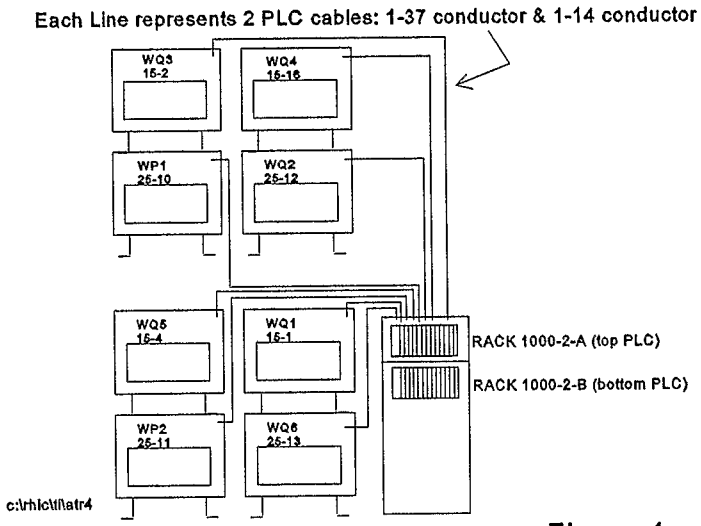

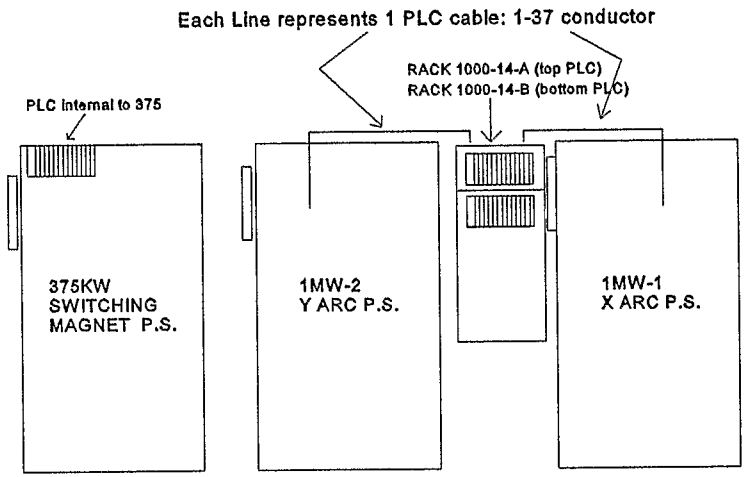

Figure 4

There is one power supply house at the end of the y arc (building 1005E) and one at the end of the x arc(building 1007W). Figures 5 and 6 are the layouts for the power supplies in these buildings.

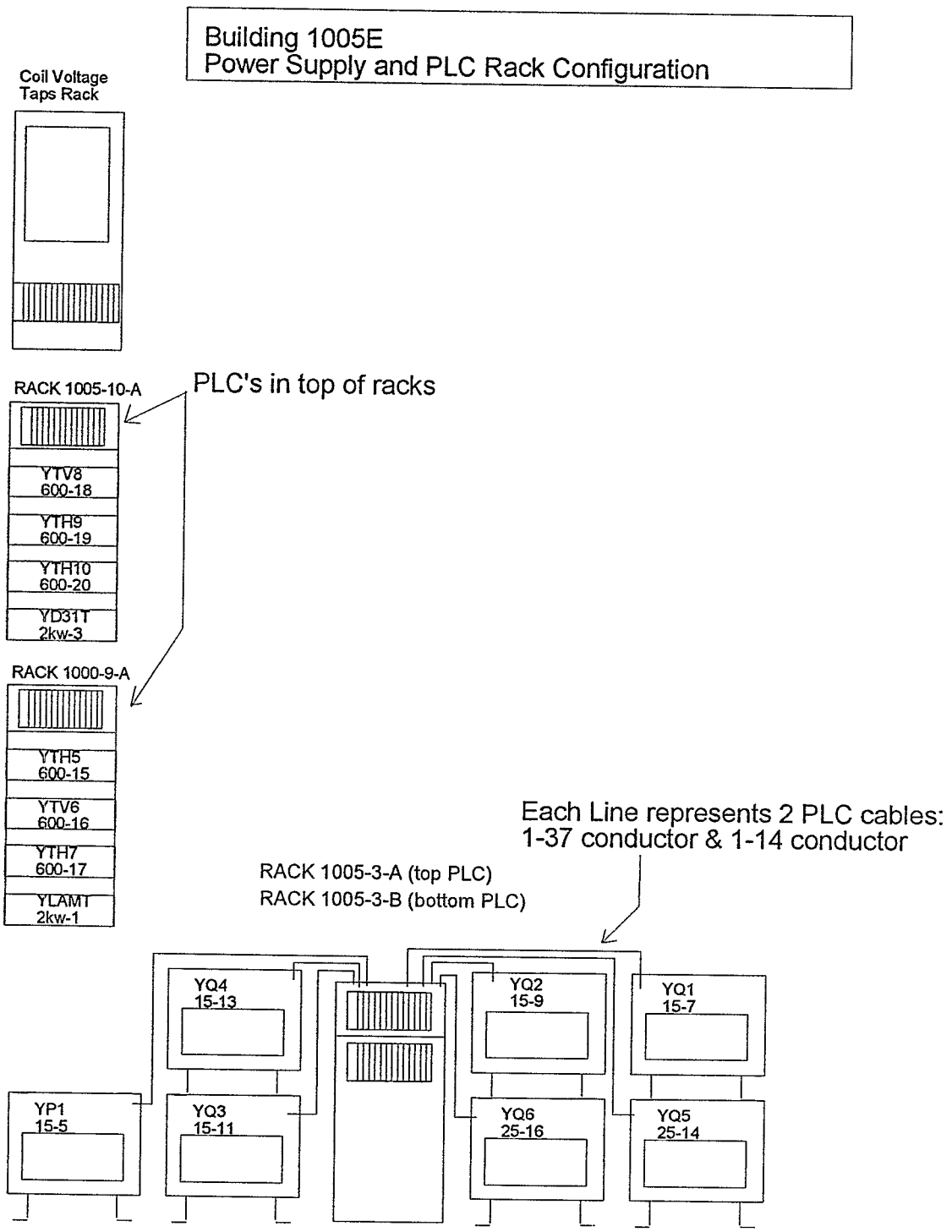

Figure 5

c:\rhic\tl\atr13

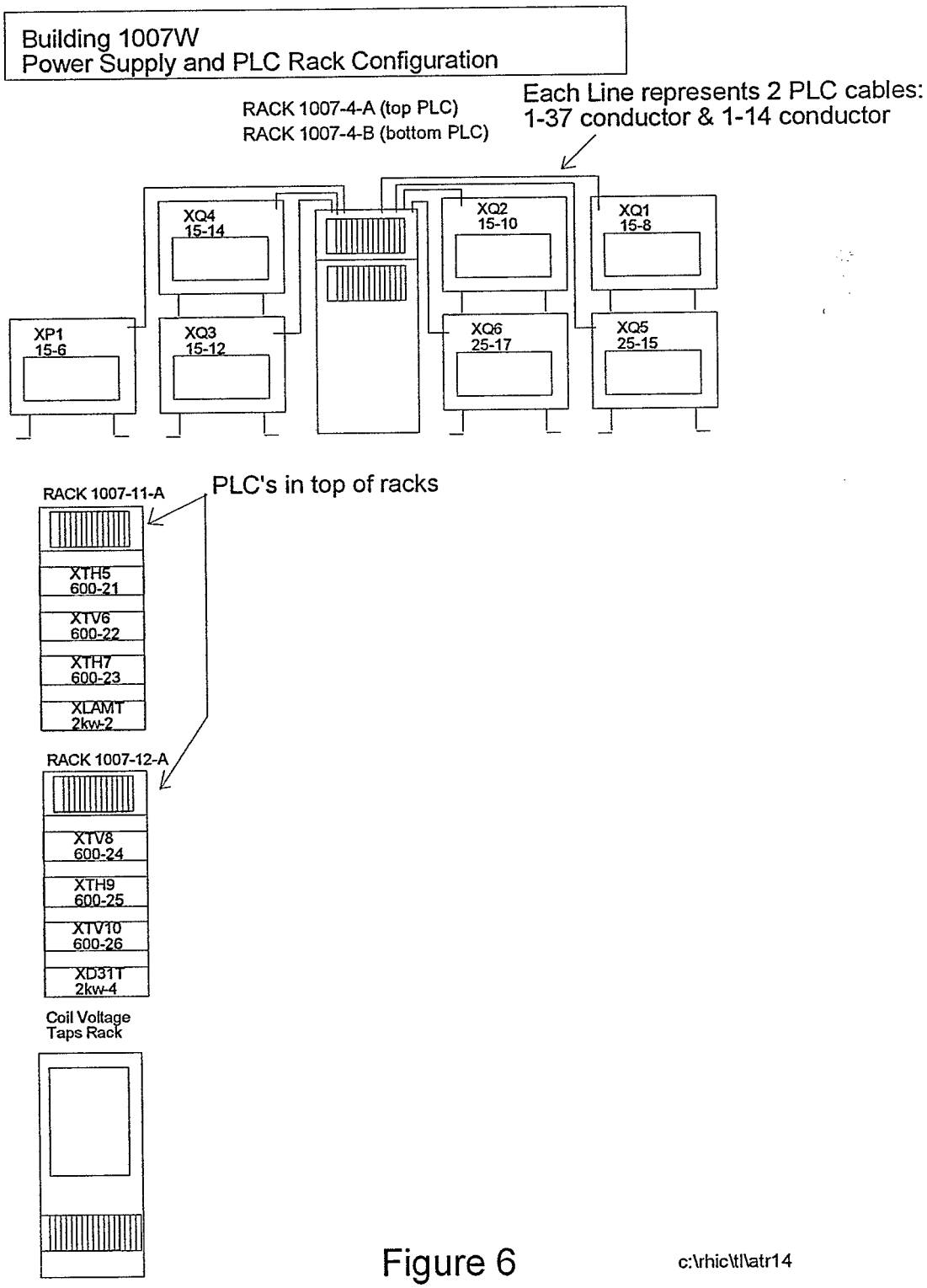

Figure 6

c:\rhic\tl\atr14

V. Power Supply Analog Controls

The PLC's are used in each building primarily as a computer interface between the power supplies and the upper level computer. Commands and statuses are sent through the PLC. The setpoint current must also be sent to the power supply. Current, voltage and error readbacks must be sent back to the upper level computer. Figure 7 is a block diagram showing the use of either the 16 bit interface card or the 12 bit D/A. There are high precision (14 bit) power supplies and low precision (12 bit) power supplies in the ATR line. The 14 bit power supplies receive their setpoint information sent from the upper level computer to a Waveform Generator (WFG) and then over fiber optic to a 16 bit DAC. The readbacks start at the power supply then go through a 16 bit ADC then over a fiber to the WFG which then sends the information to the upper level computer. This 16 bit ADC and 16 bit DAC are housed in one card along with a fiber optic interface and eight channel readbacks. These readbacks include voltage, current, error, hall voltage, reference from the DAC through the ADC, reference from the fiber input before the DAC, 1/4 calibration point, 3/4 calibration point. This "16 bit interface card" was designed and constructed at BNL. The physical placement of the card on the power supply and fiber connections to the WFG are shown in the next section and in the Appendix Section F. The second way the setpoint gets to the power supplies is the way the 12 bit power supplies receive their setpoint. The setpoint again starts from the upper level computer then goes to the WFG and again over fiber to a 12 bit DAC which then sends the setpoint to the low precision power supply. The readbacks are sent through a 12 bit MADC. The next section will also show the physical placement of the 12 bit DACS for the low precision power supplies, the Appendix Section F shows the connections between the 12 bit DAC and the power supply. Figure 7 on the next page is a block diagram of the connections between the 16 bit interface cards and 12 bit D/A and the power supplies.

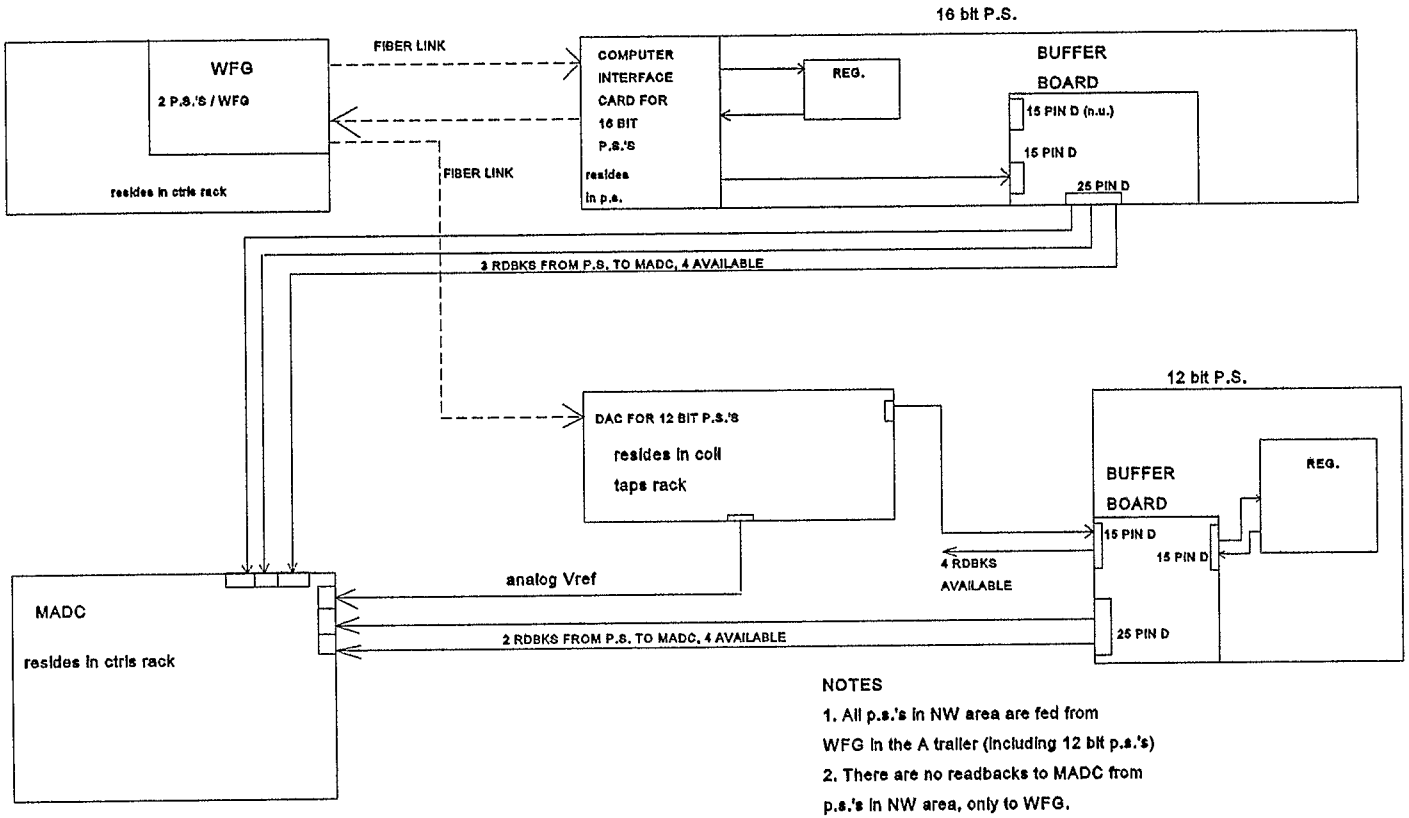

o:\hlo\ctrls\ctrls1
4/13/96

Figure 7

NOTES

1. All p.s.'s in NW area are fed from WFG in the A trailer (including 12 bit p.s.'s)
2. There are no readbacks to MADC from p.s.'s in NW area, only to WFG.
3. All buffer boards are internal to p.s. except for 600W and 2kW trim p.s.'s. Their buffer boards reside in their rack.

VI. Geographical Layouts of Power Supplies and Analog Controls

Figures 8-12 show the connections and physical placements between the power supplies, 16 bit card or 12 bit card, MADC's and WFG.

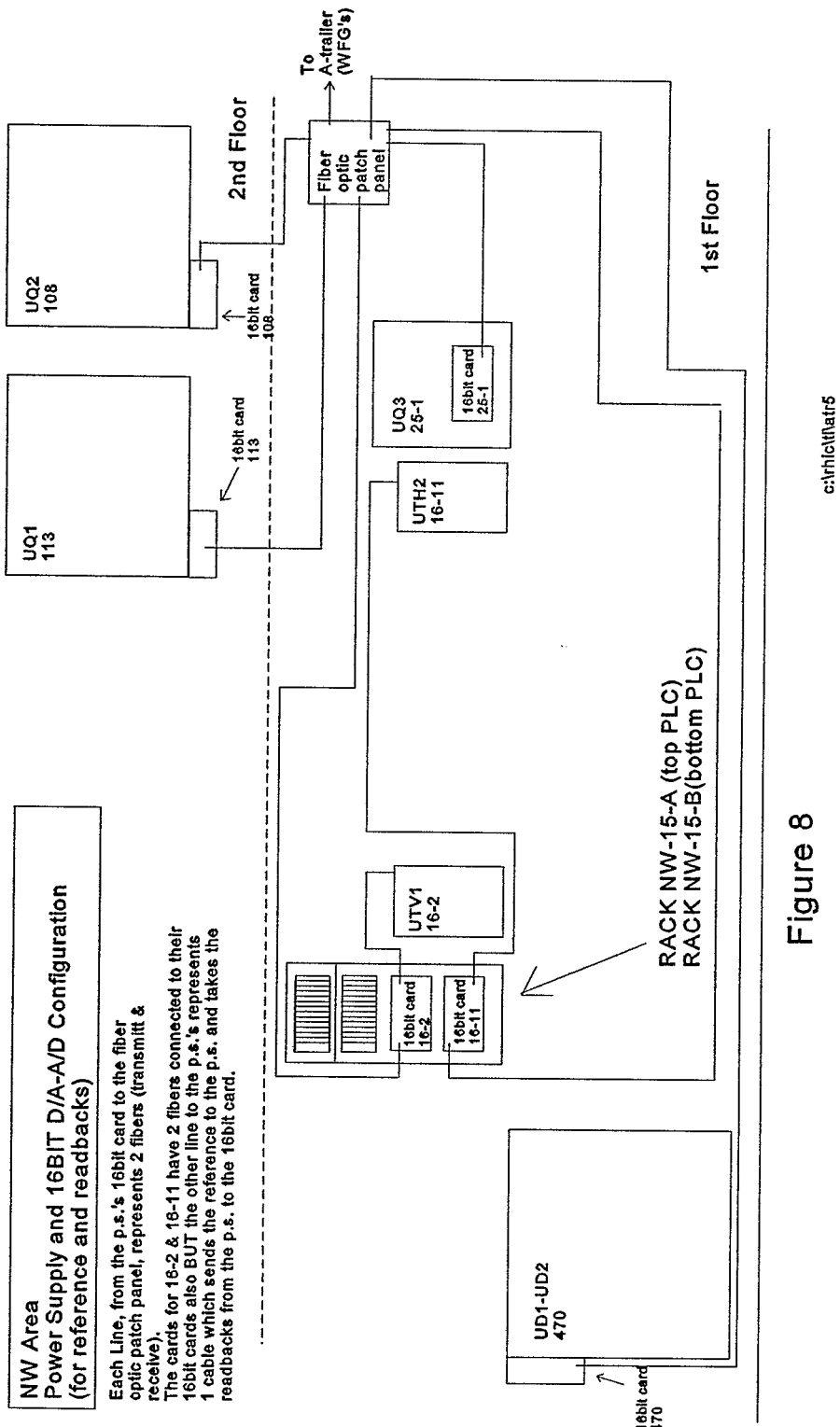

Figure 8

A House
Power Supply & 12bit D/A or 16 bit Card
Connections

note: what is not shown are the MADC connections to the A-trailer. Each power supply has 4 cables for 4 readbacks to the A-trailer.

Each Line from a trim p.s. represents a connection to a 12bit D/A in the Coil Voltage Taps Rack

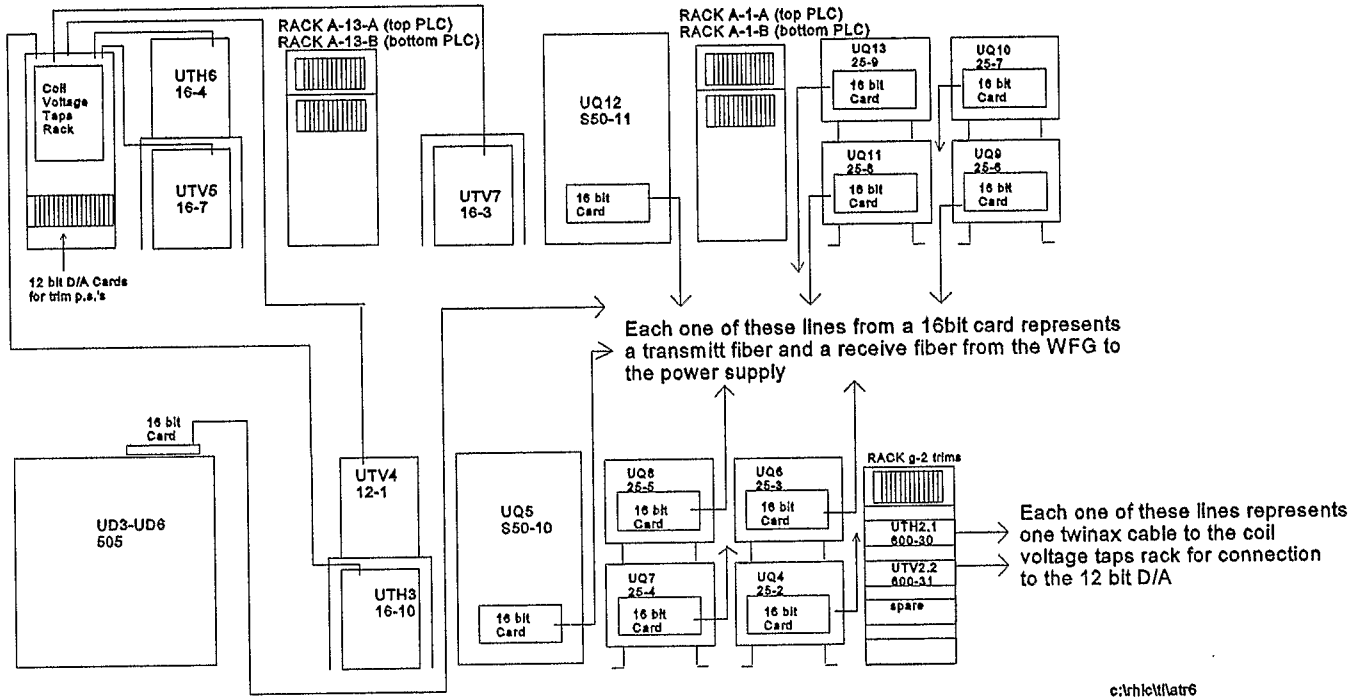

Figure 9

Building 1000P
Power Supply & 12 bit D/A or 16 bit Card Connections

note: what is not shown are the MADC connections to the MADC. Each power supply has 4 cables for 4 readbacks to the MADC.

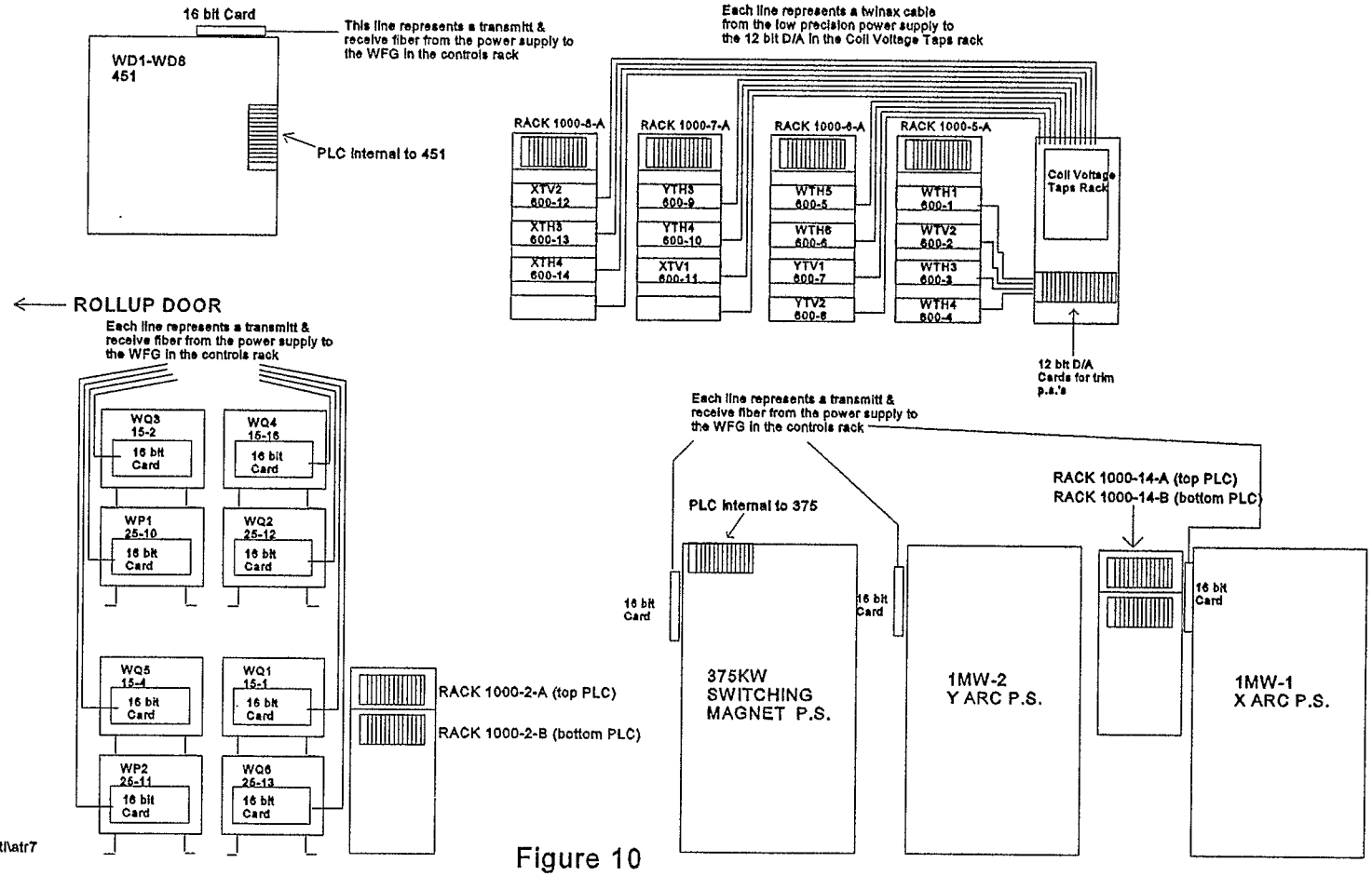

Figure 10

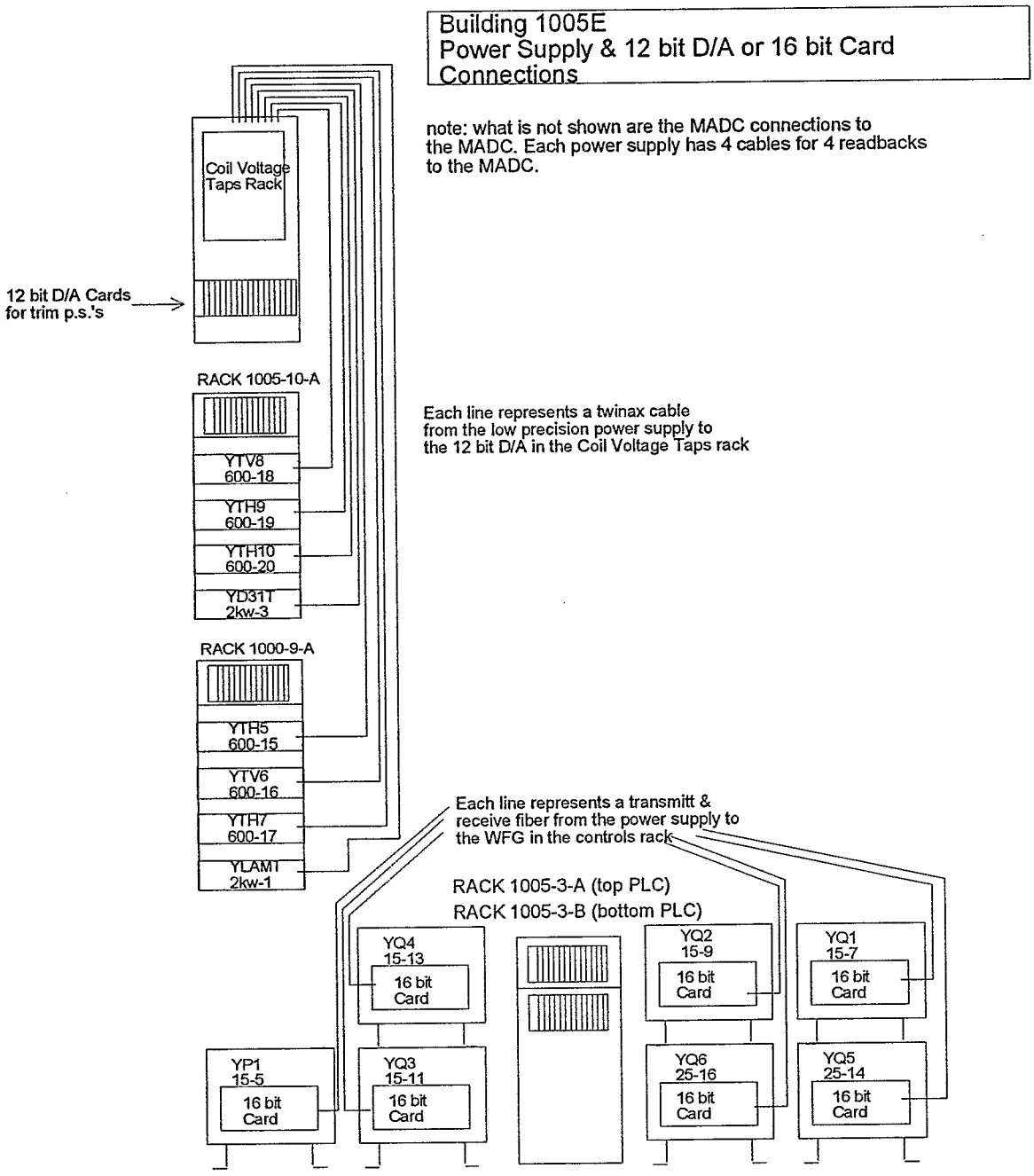

c:\rhic\tl\atr15

Figure 11

Building 1007W
Power Supply & 12 bit D/A or 16 bit Card Connections

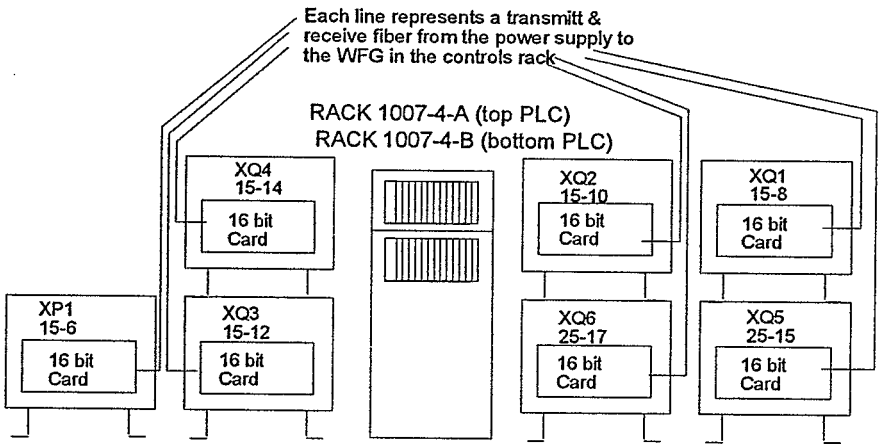

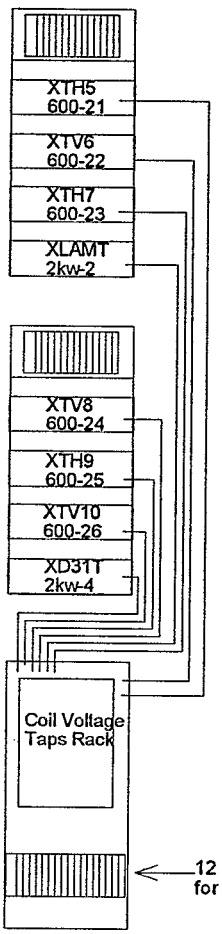

note: what is not shown are the MADC connections to the MADC. Each power supply has 4 cables for 4 readbacks to the MADC.

Each line represents a twinax cable from the low precision power supply to the 12 bit D/A in the Coil Voltage Taps rack

Figure 12

c:\rhic\tl\atr16

VII. Switching Magnet Power Supply

The switching magnet power supply in the ATR line is responsible for bouncing the beam between the X and Y arcs. To achieve this goal a solid state reversing switch was constructed at BNL as well as the rest of the switching magnet power supply. Figure 13 is a description of the expected current and voltage waveforms of the switching magnet. The maximum $^{dI}/_{dt}$ for this power supply and inductive load is approximately $6180^{A}/s$ or $3090^{A}/0.5$ s. The power supply has a maximum current of 3000A. Figure 13 shows an expected $^{dI}/_{dt}=2232^{A}/0.5$ s which is less than the $3090\ ^{A}/0.5$ s limit.

A polarity command to reverse the current is issued before the current goes to zero, the reversing switch electronics then detects zero current and as the conducting pair of SCR's turn off (due to zero current) the reversing switch electronics applies the gates to the other pair of SCR's. Figure 14 is a diagram which illustrates the basic operation of the reversing switch. There are four SCR's in an H-bridge arrangement. The load is in the middle of the H-bridge and the Switching magnet power supply feeds the H-bridge. When SCR's 1 and 4 are on the current flows through the magnet from right to left. When SCR's 2 and 3 are on the current flows through the magnet from left to right. The changing current causes the magnetic field to change direction which then bends the beam either left or right, down the X or Y arc.

There are 2 current sensors in this setup. The rectifier current sensor is used to regulate the power supply and is also fed to the reversing switch protection circuitry. The load current sensor is fed only to the reversing switch protection circuitry. If all is operating normally both current sensors should read the same current. However, if SCR's 2 and 4 or 1 and 3 should happen to turn on at the same time the power supply would be shorted. The rectifier current sensor would sense a high current and the load current sensor would sense either zero current or a much lower value than the rectifier current sensor. The difference between the two would trip the power supply to the OFF state through the reversing switch protection circuitry.

The Appendix Section G contains more details of the reversing switch electronics and the SCR DC gate.

Switching Magnet Current & Voltage Waveforms

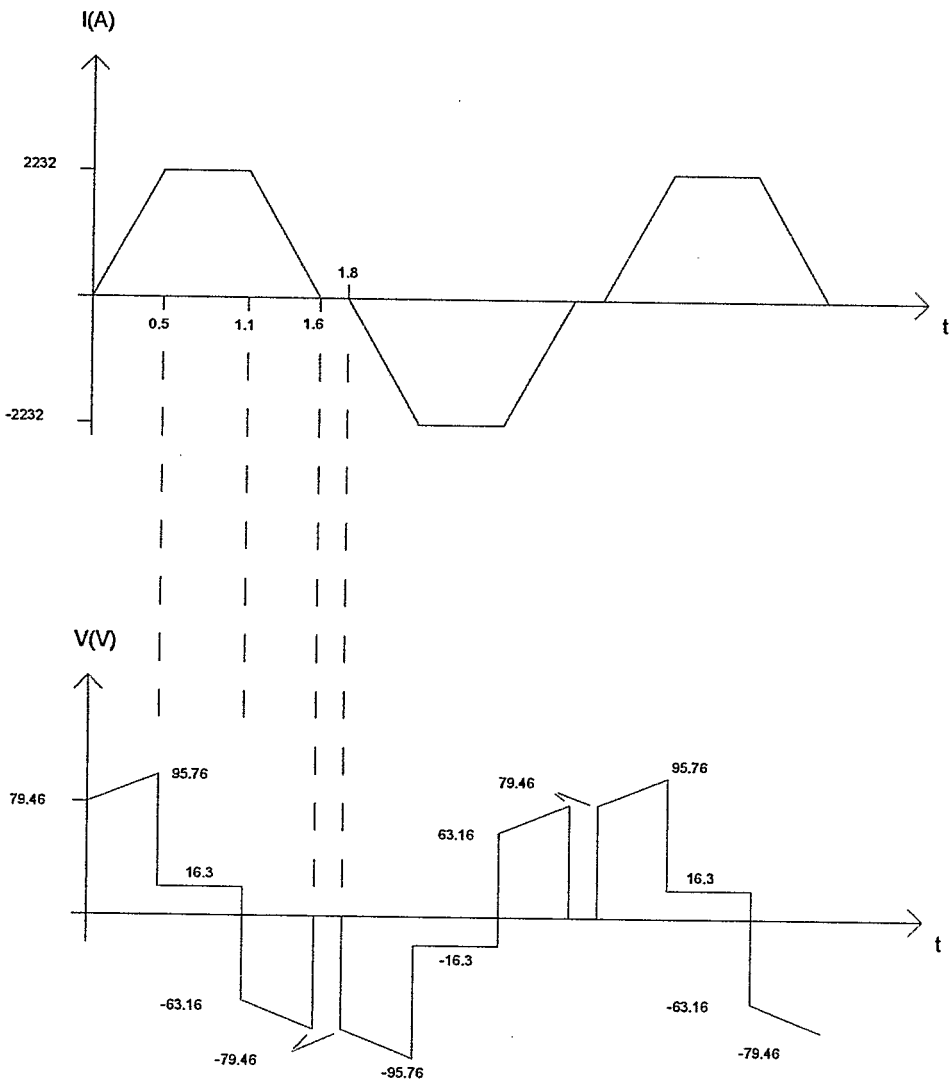

VL=79.46 Volts
Vr=16.3 Volts
L=0.0178 Henries
R=0.00729 ohms
Regulation on flattop
Regulation on pulse-to-pulse
Ripple
+/- 0.05%

Figure 13

Switching Magnet Reversing Switch

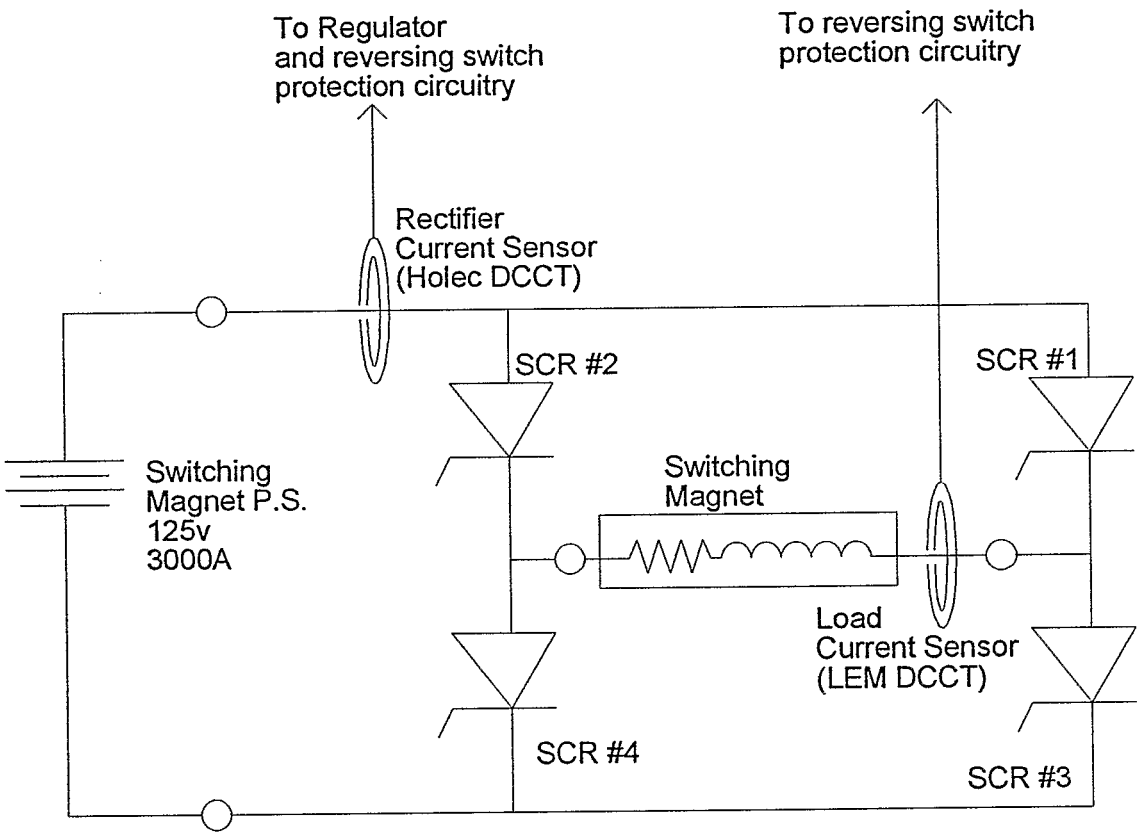

Figure 14

c:\rhic\tl\atr18

VIII. Tables

The section that follows contains tables which have the power supplies current limits, stability measurements, current ripple, locations and other useful information.

A. This table lists the p.s. dc current limit (Ilimit) based on either p.s. input current(Iac) or load limit.

P.S.	MAG	P.S. I max (A)	I op (A)	**I limit (A)**	I limit / Iop	Tap set-ting	P.S. Ilimit set to:	P.S. Vlimit set to:	Vdc at I limit	Iac at Ilimit (A)
113	uq1	2400	1561	1708	1.094	5&90%			20.84	100
108	uq2	2400	1691	2000	1.183	5&90%			25.1	115
25-1	uq3	500	335	427	1.275	35v	427	38	35	27
25-2	uq4	500	303	362	1.195	50v	376	50	50	30
50-10	uq5	400	269	400	1.487	50%			56.9	34
25-3	uq6	500		350		50v	360	39.6	37.65	30
25-4	uq7	500	196	350	1.786	50v	360	49.5	47	30
25-5	uq8	500	305	374	1.226	50v	380	50	50	32
25-6	uq9	500	357	491	1.375	50v	491	42.8	42.8	39
25-7	uq10	500	271	403	1.487	35v	405	37	35.55	30
25-8	uq11	500	316	458	1.449	50v	462	50	50	37
50-11	uq12	400	252	356	1.413	50%			39.3	39
25-9	uq13	500	221	348	1.575	50v	351	40	39.5	30
16-2	utv1	400		350					27.53	30
16-11	uth2	400		400					30.3	27
600-30	uth2.1	20		14				18	13.02	
600-31	utv2.2	20		14				18	11.85	
16-10	uth3	400		350					28.13	30
12-1	utv4	300		275					21.54	30
16-7	utv5	400		350					27.37	30
16-4	uth6	400		350					28.49	30
16-3	utv7	400		350					28.80	30

P.S.	MAG	P.S. I max (A)	I op (A)	**I limit (A)**	I limit / Iop	Tap set-ting	P.S. Ilimit set to:	P.S. Vlimit set to:	Vdc at I limit	Iac at Ilimit (A)
470	uarc4	3600	3200	3500	1.094	5			26	165
505	uarc8	3000	2500	2700	1.08	2			39	200
451	warc20	3600	3130	3300	1.054	2			129	518
375	swm	3000								
1mw-1	xarc90	3200								
1mw-2	yarc90	3200								
25-10	wp1	500	398	471	1.183	50v	471	30	23.3	40
25-11	wp2	500	397	456	1.149	35v	456	25	18.4	30
15-1	wq1	300	241	300	1.245	35v	300	41	34.05	20
25-12	wq2	500	392	463	1.181	50v	463	48	41.32	40
15-2	wq3	300	270	300	1.111	35v	300	40	33	20
15-16	wq4	300	248	300	1.21	35v	300	39	32.5	19
15-4	wq5	300	231	300	1.299	35v	300	38	31.2	19
25-13	wq6	500	272	350	1.287	35v	350	42	35	24

P.S.	MAG	P.S. I max (A)	I op (A)	I limit (A)	I limit Iop	Tap set-ting	P.S. Ilimit set to:	P.S. Vlimit set to:	Vdc at I limit	Iac at Ilimit (A)
600-1	wth1	20		14			20	18.6	15.51	
600-2	wtv2	20		14			20	18.6	15.12	
600-3	wth3	20		14			20		14.99	
600-4	wth4	20		14			20	18.6	14.22	
600-5	wth5	20		14			20	18.6	14.01	
600-6	wtv6	20		14			20	18.6	14.34	
600-11	xtv1	20		14			20	16.58	13.82	
600-12	xtv2	20		14			20	17.04	14.2	
600-13	xth3	20		14			20	17.35	14.46	
600-14	xth4	20		14			20	17.1	14.23	
600-21	xth5	20		14			20	16.8	15.01	
600-22	xtv6	20		14						
600-23	xth7	20		14			20	16.5	14.68	
600-24	xtv8	20		14			20	16.6	14.8	
600-25	xth9	20		14			20	16.6	14.74	
600-26	xtv10	20		14			20	16.34	14.5	
600-7	ytv1	20		14			20	17.68	14.73	
600-8	ytv2	20		14			20	15.44	13.72	
600-9	yth3	20		14			20	16.56	14.72	
600-10	yth4	20		14			20	16.8	14.93	
600-15	yth5	20		14			20	16.96	15.02	
600-16	ytv6	20		14			20	16.92	15.01	
600-17	yth7	20		14			20	16.31	14.48	

P.S.	MAG	P.S. I max (A)	I op (A)	**I limit (A)**	I limit Iop	Tap set-ting	P.S. Ilimit set to:	P.S. Vlimit set to:	Vdc at I limit	Iac at Ilimit (A)
600-18	ytv8	20		14				16.2	14.45	
600-19	yth9	20		14				16	14.37	
600-20	ytv10	20		14				15.59	13.96	
15-7	yq1	300	113	300	2.655	35v	300	35	28.1	18
15-9	yq2	300	83.4	300	3.597	35v	300	35	27.35	18
15-11	yq3	300	145.3	300	2.065	35v	300	37	32.25	18
15-13	yq4	300	144.4	300	2.078	35v	300	36	32.65	25
25-14	yq5	500	275.7	346	1.255	50v	355	50	45.55	30
25-16	yq6	500	292	341	1.168	50v	350	50	44.5	50
15-5	yp1	300	187	226	1.209	35v	230	16	10.33	17
2kw-3	yd31t	100								
2kw-1	ylamt	100								
15-8	xq1	300	113	300	2.655	35v	300	35	27.8	19
15-10	xq2	300	83.4	300	3.597	35v	300	32	27.15	21
15-12	xq3	300	145.3							
15-14	xq4	300	144.4	298.5	2.067	35v	300	35	32.3	17
25-15	xq5	500	275.7	348	1.262	50v	350	49.5	46.5	30
25-17	xq6	500	292	367	1.257	50v	400	50	48	30
15-6	xp1	300	187							
2kw-4	xd31t	100								
2kw-2	xlamt	100								

B. This table lists the total resistance of the load on the p.s. and the magnet resistance

P.S.	MAG	I limit (A)	Vdc at I limit	Vmagnet at Ilimit	Total Resistance (mohms)	Magnet Resistance (mohms)
113	uq1	1708	20.84	18.21	12.20141	10.66159
108	uq2	2000	25.1	22.11	12.55	11.055
25-1	uq3	427	35	33.7	81.96721	78.92272
25-2	uq4	362	50	47.64	138.1215	131.6022
50-10	uq5	400	56.9	52.41	142.25	131.025
25-3	uq6	350	37.65	33.93	107.5714	96.94286
25-4	uq7	350	47	43.66	134.2857	124.7429
25-5	uq8	374	50	48.29	133.6898	129.1176
25-6	uq9	491	42.8	38.51	87.16904	78.43177
25-7	uq10	403	35.55	32.37	88.2134	80.32258
25-8	uq11	458	50	43.91	109.1703	95.87336
50-11	uq12	356	39.3	34.96	110.3933	98.20225
25-9	uq13	348	39.5	34.4	113.5057	98.85057
16-2	utv1	350	27.53	25.01	78.65714	71.45714
16-11	uth2	400	30.3	28.4	75.75	71
600-30	uth2.1	14	13.02	12.66	930	904.2857
600-31	utv2.2	14	11.85	11.42	846.4286	815.7143
16-10	uth3	350	28.13	24.77	80.37143	70.77143
12-1	utv4	275	21.54	18.7	78.32727	68
16-7	utv5	350	27.37	25.25	78.2	72.14286
16-4	uth6	350	28.49	25.11	81.4	71.74286
16-3	utv7	350	28.80	24.13	82.28571	68.94286

P.S.	MAG	I limit (A)	Vdc at I limit	Vmagnet at Ilimit	Total Resistance (mohms)	Magnet Resistance (mohms)
470	uarc4	3500	26	19.81	7.428571	5.66
505	uarc8	2700	39	36.83	14.44444	13.64074
451	warc20	3300	129	122.2	39.09091	37.0303
375	swm					
1mw-1	xarc90					
1mw-2	yarc90					
25-10	wp1	471	23.3	16.02	49.46921	34.01274
25-11	wp2	456	18.4	15.48	40.35088	33.94737
15-1	wq1	300	34.05	29.64	113.5	98.8
25-12	wq2	463	41.32	38.31	89.24406	82.74298
15-2	wq3	300	33	29.54	110	98.46667
15-16	wq4	300	32.5	29.68	108.3333	98.93333
15-4	wq5	300	31.2	29.13	104	97.1
25-13	wq6	350	35	34.38	100	98.22857

P.S.	MAG	I limit (A)	Vdc at I limit	Vmagnet at Ilimit	Total Resistance (mohms)	Magnet Resistance (mohms)
600-1	wth1	14	15.51	13.26	1107.857	947.14286
600-2	wtv2	14	15.12	13.13	1080	937.85714
600-3	wth3	14	14.99	13.24	1070.714	945.71429
600-4	wth4	14	14.22	13.56	1015.714	968.57143
600-5	wth5	14	14.01	13.25	1000.714	946.42857
600-6	wtv6	14	14.34	13.31	1024.286	950.71429
600-11	xtv1	14	13.82	13.21	987.1429	943.57143
600-12	xtv2	14	14.2	13.31	1014.286	950.71429
600-13	xth3	14	14.46	13.43	1032.857	959.28571
600-14	xth4	14	14.23	12.95	1016.429	925
600-21	xth5	14	15.01	13.05	1072.143	932.14286
600-22	xtv6	14				
600-23	xth7	14	14.68	13.00	1048.571	928.57143
600-24	xtv8	14	14.8	13.21	1057.143	943.57143
600-25	xth9	14	14.74	13.42	1052.857	958.57143
600-26	xtv10	14	14.5	13.15	1035.714	939.28571
600-7	ytv1	14	14.73	14.02	1052.143	1001.4286
600-8	ytv2	14	13.72	12.74	980	910
600-9	yth3	14	14.72	13.5	1051.429	964.28571
600-10	yth4	14	14.93	13.54	1066.429	967.14286
600-15	yth5	14	15.02	13.03	1072.857	930.71429
600-16	ytv6	14	15.01	13.13	1072.143	937.85714
600-17	yth7	14	14.48	12.77	1034.286	912.14286

P.S.	MAG	**I limit (A)**	Vdc at I limit	Vmagnet at Ilimit	Total Resistance (mohms)	Magnet Resistance (mohms)
600-18	ytv8	14	14.45	12.84	1032.143	917.14286
600-19	yth9	14	14.37	12.91	1026.429	922.14286
600-20	ytv10	14	13.96	12.49	997.1429	892.14286
15-7	yq1	300	28.1	24.28	93.66667	80.933333
15-9	yq2	300	27.35	24.06	91.16667	80.2
15-11	yq3	300	32.25	29.5	107.5	98.333333
15-13	yq4	300	32.65	29.54	108.8333	98.466667
25-14	yq5	346	45.55	44.2	131.6474	127.74566
25-16	yq6	341	44.5	43.4	130.4985	127.27273
15-5	yp1	226	10.33	6.79	45.70796	30.044248
2kw-3	yd31t					
2kw-1	ylamt					
15-8	xq1	300	27.8	24.22	92.66667	80.733333
15-10	xq2	300	27.15	23.84	90.5	79.466667
15-12	xq3					
15-14	xq4	298.5	32.3	29.35	108.2077	98.324958
25-15	xq5	348	46.5	44.4	133.6207	127.58621
25-17	xq6	367	48	46.9	130.7902	127.79292
15-6	xp1					
2kw-4	xd31t					
2kw-2	xlamt					

C. This table gives percentage current ripple of P.S. current maximum and Magnet Inductance.

Magnet	Measured Inductance (mH)	Documented Inductance (mH)	%Iripple of maximum	V tap setting (for this Iripp)	Vdc(V)	Idc(A)
uq1			**1.67**	5 & 90%	20.84	1708
uq2			**1.67**	5 & 90%	25.1	2000
uq3	5-15		<0.02	50v	27.9	335
uq4	110-140		<0.02	50v	48.2	338
uq5	110-140		0.1275	50%	41	269
uq6	110-140		<0.02	35v	24	246
uq7	110-140		<0.02	35v	25.4	195
uq8	110-140		<0.02	35v	39.55	292
uq9	5-15		<0.02	35v	24	286
uq10	5-15		<0.02	35v	18.5	213
uq11	80-90		<0.02	35v	29	278
uq12	80-90		0.2125	50%	26	246
uq13	80-90		<0.02	35v	21.9	198
utv1			2.5		23	300
uth2			2.5		25	340
uth3			3		28.13	350
utv4			2.4		19.58	250
utv5			2.8		27.37	350
uth6			3.2		28.49	350
utv7			4		28.80	350

Magnet	Measured Inductance (mH)	Documented Inductance (mH)	%Iripple of max	V tap setting (for this Iripp)	Vdc(V)	Idc(V)
uarc4		8.2	<0.02	5	23.64	3200
uarc8		16.4	0.027	2	36.1	2500
uarc20		32.8	0.02	2	118	3130
wp1			0.02	50v	19.55	398
wp2			0.03	35v	16.75	421
wq1	80-90		<0.02	35v	24.7	219
wq2	5-15		<0.02	35v	26.75	303
wq3	80-90		0.024	35v	25.6	234.6
wq4	80-90		<0.02	35v	23.1	214.8
wq5	80-90		<0.02	35v	20.7	199.86
wq6	80-90		<0.02	35v	23.45	237
new air cooled trims type 1		403	≤0.2%			
new air cooled trims type 2		436	≤0.2%			
swm		17.8				
xarc90		128.78				
xlamb		1.68				

Magnet	Measured Inductance (mH)	Documented Inductance (mH)	%Iripple of max	V tap setting (for this Iripp)	Vdc(V)	Idc(V)
xq1	5-15					
xq2	5-15					
xq3	80-90					
xq4	80-90					
xq5	110-140					
xq6	110-140					
xp1						

D. This table contains current stability measurements of power supplies with the actual load in the beamline. The stability is calculated as the ((max-min)/full scale)*100.

MAGNET	P.S. SERIAL #	LENGTH OF TIME FOR STABILITY TEST (hrs)	STABILITY (percent)	NPLC SETTING ON HP 8.5 DIGIT METER	
UQ5	S50-10	3	0.0014	100	
UQ7	25-4	4	0.003	100	
UQ8	25-5	2	0.002	100	
UQ9	25-6	1.5	0.002	100	
UQ10	25-7	2	0.001	100	
UQ11	25-8	1	0.002	100	
UQ12	S50-11	1	0.0012	100	
UQ13	25-9	1.5	0.002	100	
WQ1	15-1	1	0.004	100	
WQ2	25-12	1.5	0.003	100	
WQ3	15-2	1	0.005	100	
WQ4	15-16	1.5	0.008	100	
WQ5	15-4	1.5	0.014	100	
WQ6	25-13	1.5	0.002	100	
WP1	25-10	1.5	0.016	100	
WP2	25-11	1.5	0.004	100	

E. This table contains current stability measurements of power supplies with the test load in the power supply factory (bldg 922 in BNL). The stability is calculated as the ((max-min)/full scale)*100.

P.S. SERIAL #	LENGTH OF TIME FOR STABILITY TEST (hrs)	STABILITY (percent)	NPLC SETTING ON HP 8.5 DIGIT METER	ASSOCIATED MAGNET IN BEAMLINE	
113	5	0.004	100	UQ1	
108	5	0.007	100	UQ2	
16-11	2	0.012	100	UTV1	
16-2	2	0.01	100	UTH2	
16-10	2	0.01	100	UTH3	
12-1	2	0.02	100	UTV4	
16-7	2	0.06	100	UTV5	
16-4	2	0.02	100	UTH6	
16-3	2	0.01	100	UTV7	
470	6.5	0.002	100	UD1-UD2	
S50-10	5.5	0.002	100	UQ5	
S50-11	5	0.002	100	UQ12	
505	5	0.0035	100	UD3-UD6	
451	4.5	0.006	100	WD1-WD8	
1MW-1	4	0.004	100	X ARC	
1MW-2	5	0.006	100	Y ARC	

F. This table contains the detailed modifications to the regulator cards for the old power supplies in the transfer line.

Power Supply	Magnet	Modifications to Regulator Card
16-2	UTV1	1) diode across R11 (1N2071) 2) jumper A2-6 to P1-3 3) jumper A6-6 to P1-H 4) P1-B to common 5) R71=20kohms 6) removed ramp jumper(J5,J6,J7) 7)jumper block set for shunt (1-8 & 2-9) 8) R36=4kohms
16-11	UTH2	same as 16-2
470	UD1-UD2	1) diode across R11 (1N2071) 2) jumper A2-6 to P1-3 3) jumper A6-6 to P1-H 4) P1-B to common 5) R71=20kohms 6) removed ramp jumper(J5,J6,J7) 7)jumper block set for dcct (3-10 & 4-11) 8)R7=R9=200kohms 9)R5=R6=40kohms 10)C3=C4=0.022uF
108 & 113	UQ1 & UQ2	same as 470
505	UD3-UD6	same as 470

Power Supply	Magnet	Modifications to Regulator Card
S50-10 & S50-11	UQ5 & UQ12	1) diode across R11 (1N2071) 2) jumper A2-6 to P1-3 3) jumper A6-6 to P1-H 4) P1-B to common 5) R71=20kohms 6) removed ramp jumper(J5,J6,J7) 7)jumper block set for dcct (3-10 & 4-11) 8)R7=R9=200kohms 9)R5=R6=40kohms 10)C3=C4=0.022uF 11) Jumper J1-J2 & J3-J4 12) C18=C19=1uF 13) R68=56ohm 14)R13=R14=80kohms 15) R12=R15=400kohms
16-10,12-1,16-7, 16-4,16-3	UTH3,UTV4,UTV5, UTH6,UTV7	same as 16-2
451	WD1-WD8	same as 470

G. These tables list the serial numbers and modifications of the 16 bit cards with the associated power supply.

NW AREA

Power Supply	Magnet	16 bit Card Serial Number	Modifications to 16 bit Card
16-2	UTV1	21	1) E4-E5 is cut 2) U1=x100
16-11	UTH2	22	1) E4-E5 is cut 2) U1=x100
25-1	UQ3	27	
108	UQ2	34	E4-E5 is cut
113	UQ1	37	E4-E5 is cut
470	UD1-UD2	36	E4-E5 is cut

A HOUSE

Power Supply	Magnet	16 bit Card Serial Number	Modifications to 16 bit Card
25-2	UQ4	07	
S50-10	UQ5	14	1) E4-E5 is cut 2) U1=x4
25-3	UQ6	23	
25-4	UQ7	43	
25-5	UQ8	31	
25-6	UQ9	12	
25-7	UQ10	17	
25-8	UQ11	04	
S50-11	UQ12	20	1) E4-E5 is cut 2) U1=x4
25-9	UQ13	16	
505	UD3-UD6	03	E4-E5 is cut

1000P

Power Supply	Magnet	16 bit Card Serial Number	Modifications to 16 bit Card
15-1	WQ1	33	
25-12	WQ2	32	
15-2	WQ3	13	
15-16	WQ4	05	
15-4	WQ5	02	
25-13	WQ6	29	
25-10	WP1	08	
25-11	WP2	09	
451	WD1-WD8	45	E4-E5 is cut
1MW-1	XD1-XLAMB	01	E4-E5 is cut
1MW-2	YD1-YLAMB	30	E4-E5 is cut
375KW	SWM	51	E4-E5 is cut

1005E

Power Supply	Magnet	16 bit Card Serial Number	Modifications to 16 bit Card
15-7	YQ1	19	
15-9	YQ2	40	
15-11	YQ3	41	
15-13	YQ4	25	
25-14	YQ5	11	
25-16	YQ6	46	
15-5	YP1	18	

1007W

Power Supply	Magnet	16 bit Card Serial Number	Modifications to 16 bit Card
15-8	XQ1	10	
15-10	XQ2	15	
15-12	XQ3	48	
15-14	XQ4	38	
25-15	XQ5	44	
25-17	XQ6	55	
15-6	XP1	47	

H. This table contains modifications made to the buffer boards.

Magnets	Power Supplies	Modifications
UTH3 UTV4 UTV5 UTH6 UTV7	16-10 12-1 16-7 16-14 16-3	1) R12=200k(0.1%) with a 22Mohm in parallel 2) R16=200K 3)C5=C6=4.7uF 4) R10=R11=2k 5) R13=5k pot 6) R14=R15=jumper 7) R3=R7=1k
UTV1 UTH2	16-2 16-11	1) R12=200k(0.1%) with a 22Mohm in parallel 2) R16=200K 3)C5=C6=4.7uF 4) R10=R11=2k 5) R13=5k pot 6) R14=R15=jumper
	Any p.s. with a 16 bit card	1) R2=R11=R20=R29=9K

I. This is list of spare PLC modules for the Injection Line

MODULE	SPARES	DESCRIPTION
1785-MJ	1	EEPROM
	1	PLC 5/12
1771-IBN	4	(10-30VDC)INPUT
1771-IQ16A	1	ISOLATED 24VDC INPUT
1771-IBD	1	24VDC 16 INPUT MODULE
1771-OBN	1	(10-30VDC)OUTPUT
1771-IAD	1	120 VAC INPUT
	1	PLC P.S.
1771-ID16	1	ISOLATED 120VAC INPUT
	1	12 SLOT CHASSIS
	1	16 SLOT CHASSIS
	1	RACK (INVERPOWER)
1771-OQ16	1	ISOLATED 24VDC OUTPUT

J. This is a list of power supply houses and PLC's in these houses

I.NW area(bldg 912)
6 power supplies

Magnet	Power Supply	New power supply?	PLC CHASSIS
UQ1	113	NO	NW-15-A
UQ2	108	NO	NW-15-A
UQ3	25-1	YES	NW-15-B
UTV1	16-11	NO	NW-15-B
UTH2	16-2	NO	NW-15-B
UD1-UD2	470	NO	NW-15-A

2 PLC'S IN 1 PLC RACK
The PLC in the top chassis is NW-15-A.
The PLC in the bottom chassis NW-15-B

II. A-HOUSE

16 power supplies

Magnet	Power Supply	New power supply?	PLC CHASSIS
UQ4	25-2	YES	A-1-A
UQ5	S50-10	NO	A-13-B
UQ6	25-3	YES	A-1-A
UQ7	25-4	YES	A-1-A
UQ8	25-5	YES	A-1-A
UQ9	25-6	YES	A-1-B
UQ10	25-7	YES	A-1-B
UQ11	25-8	YES	A-1-B
UQ12	S50-11	NO	A-13-B
UQ13	25-9	YES	A-1-B
UTH3	16-10	NO	A-13-A
UTV4	12-1	NO	A-13-B
UTV5	16-7	NO	A-13-A
UTH6	16-4	NO	A-13-A
UTV7	16-3	NO	A-13-A
UD3-UD6	505	NO	A-13-A

4 PLC'S IN 2 PLC RACKS

The 4 PLC'S are in RACKS A-13-A, A-13-B, A-1-A, A-1-B

III. BUILDING 1000P

26 power supplies

Magnet	Power Supply	New power supply?	PLC CHASSIS
WQ1	15-1	YES	1000-2-B
WQ2	25-12	YES	1000-2-A
WQ3	15-2	YES	1000-2-B
WQ4	15-16	YES	1000-2-B
WQ5	15-4	YES	1000-2-B
WQ6	25-13	YES	1000-2-A
WP1	25-10	YES	1000-2-A
WP2	25-11	YES	1000-2-A
WD1-WD8	451	NO	INTERNAL
WTH1	600-1	YES	1000-5-A
WTV2	600-2	YES	1000-5-A
WTH3	600-3	YES	1000-5-A
WTH4	600-4	YES	1000-5-A
WTH5	600-5	YES	1000-6-A
WTV6	600-6	YES	1000-6-A
XTV1	600-11	YES	1000-7-A
XTV2	600-12	YES	1000-8-A
XTH3	600-13	YES	1000-8-A
XTH4	600-14	YES	1000-8-A
YTV1	600-7	YES	1000-6-A
YTV2	600-8	YES	1000-6-A
YTH3	600-9	YES	1000-7-A
YTH4	600-10	YES	1000-7-A

III. BUILDING 1000P
26 power supplies (continued)

Magnet	Power Supply	New power supply?	PLC CHASSIS
SWITCHING MAGNET	375kw	NO	INTERNAL
X-ARC	1MW-1	NO	1000-14-A
Y-ARC	1MW-2	NO	1000-14-A
X and Y ARC INTERLOCKS	feeds interlock status to rack 1000-14-A		1000-14-B

10 PLC'S IN 6 PLC RACKS and 1 INTERNAL TO P.S. 451 and 1 INTERNAL TO 375KW
The 10 PLC'S are in RACKS 1000-5-A, 1000-6-A, 1000-7-A, 1000-8-A, 1000-2-A, 1000-2-B, 1000-14-A, 1000-14-B, 1 Internal to 375kw & 1 Internal to 451

IV.BUILDING 1005E
15 power supplies

Magnet	Power Supply	New power supply?	PLC CHASSIS
YQ1	15-7	YES	1005-3-A
YQ2	15-9	YES	1005-3-A
YQ3	15-11	YES	1005-3-B
YQ4	15-13	YES	1005-3-B
YQ5	25-14	YES	1005-3-B
YQ6	25-16	YES	1005-3-B
YP1	15-5	YES	1005-3-A
YTH5	600-15	YES	1005-9-A
YTV6	600-16	YES	1005-9-A

IV.BUILDING 1005E
15 power supplies (continued)

Magnet	Power Supply	New power supply?	PLC CHASSIS
YTH7	600-17	YES	1005-9-A
YTV8	600-18	YES	1005-10-A
YTH9	600-19	YES	1005-10-A
YTV10	600-20	YES	1005-10-A
YD31T	2KW-3	YES	1005-10-A
YLAMT	2KW-1	YES	1005-9-A

4 PLC'S IN 3 PLC RACKS
The 4 PLC'S are in RACKS 1005-3-A, 1005-3-B, 1005-9-A, 1005-10-A

V.BUILDING 1007W
15 power supplies

Magnet	Power Supply	New power supply?	PLC CHASSIS
XQ1	15-8	YES	1007-4-A
XQ2	15-10	YES	1007-4-A
XQ3	15-12	YES	1007-4-B
XQ4	15-14	YES	1007-4-B
XQ5	25-15	YES	1007-4-B
XQ6	25-17	YES	1007-4-B
XP1	15-6	YES	1007-4-A
XTH5	600-21	YES	1007-11-A
XTV6	600-22	YES	1007-11-A

V.BUILDING 1007W

15 power supplies (continued)

Magnet	Power Supply	New power supply?	PLC CHASSIS
XTH7	600-23	YES	1007-11-A
XTV8	600-24	YES	1007-12-A
XTH9	600-25	YES	1007-12-A
XTV10	600-26	YES	1007-12-A
XD31T	2KW-4	YES	1007-12-A
XLAMT	2KW-2	YES	1007-11-A

4 PLC'S IN 3 PLC RACKS

The 4 PLC'S are in RACKS 1007-4-A, 1007-4-B, 1007-11-A, 1005-12-A

K.Summary of Modifications to older power supplies in Transfer Line.

1. a) All the older power supplies have been rewired for OFF/STANDBY/ON control. Previously the power supplies had only an OFF and ON state. The added STANDBY state means that there is control power but no DC output. The OFF state now means there is no control power where as before control power was still present in the OFF state.

b) All the older power supplies were rewired to interface with a PLC. The PLC acts as a computer interface to the higher level computer. Commands and statuses go through the PLC. The power supply is still self protecting but the PLC has a redundant interlocking string. The power supply can still be detached from the PLC and operated stand alone if need be. The faults are latched in the PLC if the power supply is in remote only. If the power supply is in local the faults are not latched.

c) The magnet interlocks no longer go back to the power supply directly. The magnet interlocks go back to a PLC module in the PLC rack. The power supply is then fed the magnet interlocks status from the PLC. In doing so 110v from the power supply was replaced with 24v from the PLC to the magnet interlocks.

d) The older power supplies are connected to the PLC by a 37 conductor cable. This 37 conductor cable handles both the inputs and outputs of the power supplies. The new Inverpower 15kw's and 25kw's are connected to the PLC with 2 cables. One cable handles the inputs and the other handles the outputs.

2. a) All the old power supplies (except the Christies) have had a DCCT added for improved regulation. On all the TB1 strips there is a place to measure the DCCT voltage and shunt voltage. The shunt is still connected in the power supply for the DC ammeter and DC overload. The shunt can also be used as a backup if the DCCT fails. The regulator card would have to change if the shunt was to be used because of the modification of the existing regulator card to accept the DCCT.

3. The regulator card on the power supplies have all been modified:

1) to regulate off the DCCT (the DCCT is an input to the hall probe on the regulator print.)
2) to send out the error signal as a readback through the ramp op-amp
3) The jumper j5,6,7 has been removed because there is no longer a ramp input.
4) A diode has been added across the reference input to protect against a positive reference.
5) The jumper block is set to regulate off the DCCT.
6) The Christies have not been modified for a DCCT therefore modification #1 has not taken place in the Christies but modifications 2-5 have been done to the Christies.

Summary of Modifications to older power supplies in Transfer Line(continued)

4. The power supplies now receive their reference one of two ways.

a) The Christies (trim magnets), in the A-house only, and the new trim magnet power supplies receive their reference from a 12 bit DAC which resides in the coil voltage taps rack. The 12 bit DAC gets its reference over a fiber link from a Waveform Generator in the A-trailer. The Christies readbacks go through a BUFFER BOARD, which has been added to all of the power supplies. From the buffer board the readbacks are sent over 4 separate cables to the MADC (multiplex analog to digital converter) in the A-trailer.

b) The 2 Christies in the NW area and the rest of the older quad and dipole power supplies receive their reference from a 16 bit D/A. This 16bit D/A is in a grey metal box along with a 16bit A/D for the the power supply readbacks. This grey box sits on the outside of the power supply except for the two Christies in the NW area. Their 16bit D/A-A/D boxes sit on the outside of PLC rack NW-15-A,B. The readbacks for these older power supplies go through these grey boxes and in addition are sent through a buffer board to the MADC. The older power supplies in the NW area are the only ones which do not have signals sent back to the MADC even though they do have buffer boards.

L. AC Power Estimate for ATR Line
(see next page)

ACIN12

7/22/96

			MAXIMUM RATINGS		EXPECTED OPERATING RATINGS				
House	Magnet	P.S.	Vdc(V)	Idc(A)	Vdc(V)	Idc(A)	Pdc(Kw)	Pin(KVA)	Pin/house (KVA/house)
NW	UTV1	PSUTV1	40	400	20	200	4	5.88	
NW	UTH2	PSUTH2	40	400	20	200	4	5.88	
NW	UQ1	PSUQ1	90	2400	22	1561	34.342	50.50	
NW	UQ2	PSUQ2	90	2400	23	1691	38.893	57.20	
NW	UARC4	PSUARC4	300	2000	24	3208	76.992	113.22	
NW	UQ3	PSUQ3	50	500	33	335	11.055	16.26	248.94
A	UTH2.1	PSUTH2.1	30	20	15	13.5	0.2025	0.486	
A	UTH2.2	PSUTH2.2	30	20	15	13.5	0.2025	0.486	
A	UQ4	PSUQ4	50	500	39	303	11.817	17.38	
A	UQ5	PSUQ5	125	400	35	269	9.415	13.85	
A	UQ6	PSUQ6	50	500	24	246	5.904	8.68	
A	UQ7	PSUQ7	50	500	24	196	4.704	6.92	
A	UTH3	PSUTH3	40	300	20	200	4	5.88	
A	UTV4	PSUTV4	40	400	20	200	4	5.88	
A	UQ8	PSUQ8	50	500	38	305	11.59	17.04	
A	UQ9	PSUQ9	50	500	35	357	12.495	18.38	
A	UARC8	PSUARC8	50	3000	35	2409	84.315	123.99	
A	UQ10	PSUQ10	50	500	27	271	7.317	10.76	
A	UTV5	PSUTV5	40	400	20	200	4	5.88	
A	UQ11	PSUQ11	50	500	32	316	10.112	14.87	
A	UTH6	PSUTH6	40	400	20	200	4	5.88	
A	UQ12	PSUQ12	125	400	27	252	6.804	10.01	
A	UTV7	PSUTV7	40	400	20	200	4	5.88	
A	UQ13	PSUQ13	50	500	22	221	4.862	7.15	278.43
1000P	WARC20	PSWARC20	125	3600	100	3012	301.2	442.94	
1000P	WP1	PSWP1	50	500	23	399	9.177	13.50	
1000P	WP2	PSWP2	50	500	17	397	6.749	9.93	
1000P	WQ1	PSWQ1	50	300	27	241	6.507	9.57	
1000P	WQ2	PSWQ2	50	500	40	392	15.68	23.06	
1000P	WQ3	PSWQ3	50	300	30	270	8.1	11.91	
1000P	WQ4	PSWQ4	50	300	26	248	6.448	9.48	
1000P	WQ5	PSWQ5	50	300	23	231	5.313	7.81	
1000P	WQ6	PSWQ6	50	500	26	272	7.072	10.40	
1000P	SWM	PSSWM	125	3000	82	2143	175.726	258.42	
1000P	XARC90	PSXARC90	350	3200	300	2735	820.5	1206.62	
1000P	YARC90	PSYARC90	350	3200	300	2735	820.5	1206.62	
1000P	WTH1	PSWTH1	30	20	15	13.5	0.2025	0.486	
1000P	WTV2	PSWTV2	30	20	15	13.5	0.2025	0.486	
1000P	WTH3	PSWTH3	30	20	15	13.5	0.2025	0.486	
1000P	WTH4	PSWTH4	30	20	15	13.5	0.2025	0.486	
1000P	WTH5	PSWTH5	30	20	15	13.5	0.2025	0.486	
1000P	WTV6	PSWTV6	30	20	15	13.5	0.2025	0.486	
1000P	XTV1	PSXTV1	30	20	15	13.5	0.2025	0.486	
1000P	XTV2	PSXTV2	30	20	15	13.5	0.2025	0.486	
1000P	XTH3	PSXTH3	30	20	15	13.5	0.2025	0.486	
1000P	XTH4	PSXTH4	30	20	15	13.5	0.2025	0.486	
1000P	YTV1	PSYTV1	30	20	15	13.5	0.2025	0.486	
1000P	YTV2	PSYTV2	30	20	15	13.5	0.2025	0.486	
1000P	YTH3	PSYTH3	30	20	15	13.5	0.2025	0.486	
1000P	YTH4	PSYTH4	30	20	15	13.5	0.2025	0.486	3217.056
1007W	XQ1	PSXQ1	50	300	13	113	1.469	2.16	
1007W	XQ2	PSXQ2	50	300	10	83	0.83	1.22	
1007W	XQ3	PSXQ3	50	300	16	145	2.32	3.41	
1007W	XQ4	PSXQ4	50	300	16	144	2.304	3.39	
1007W	XQ5	PSXQ5	50	500	34	276	9.384	13.80	
1007W	XQ6	PSXQ6	50	500	36	293	10.548	15.51	
1007W	XP1	PSXP1	50	300	6	188	1.128	1.66	
1007W	XLAMT	PSXLAMT	20	100	2	22.5	0.045	0.08	
1007W	XD31T	PSXD31T	20	100	13	100	1.3	2.25	
1007W	XTH5	PSXTH5	30	20	15	13.5	0.2025	0.486	
1007W	XTV6	PSXTV6	30	20	15	13.5	0.2025	0.486	
1007W	XTH7	PSXTH7	30	20	15	13.5	0.2025	0.486	
1007W	XTV8	PSXTV8	30	20	15	13.5	0.2025	0.486	
1007W	XTH9	PSXTH9	30	20	15	13.5	0.2025	0.486	
1007W	XTV10	PSXTV10	30	20	15	13.5	0.2025	0.486	46.39624
1005E	YQ1	PSYQ1	50	300	13	113	1.469	2.16	
1005E	YQ2	PSYQ2	50	300	10	83	0.83	1.22	
1005E	YQ3	PSYQ3	50	300	16	145	2.32	3.41	
1005E	YQ4	PSYQ4	50	300	16	144	2.304	3.39	
1005E	YQ5	PSYQ5	50	500	34	276	9.384	13.80	
1005E	YQ6	PSYQ6	50	500	36	293	10.548	15.51	
1005E	YP1	PSYP1	50	300	6	188	1.128	1.66	
1005E	YLAMT	PSYLAMT	20	100	2	22.5	0.045	0.08	
1005E	YD31T	PSYD31T	20	100	13	100	1.3	2.25	
1005E	YTH5	PSYTH5	30	20	15	13.5	0.2025	0.486	
1005E	YTV6	PSYTV6	30	20	15	13.5	0.2025	0.486	
1005E	YTH7	PSYTH7	30	20	15	13.5	0.2025	0.486	
1005E	YTV8	PSYTV8	30	20	15	13.5	0.2025	0.486	
1005E	YTH9	PSYTH9	30	20	15	13.5	0.2025	0.486	
1005E	YTV10	PSYTV10	30	20	15	13.5	0.2025	0.486	46.39624
TOTALS:							2605.915		3837.227

M. ATR PLC Rack Cross Reference List

Construction Label	Installation Label
A-1-A,B	A-3
1000-2-A,B	WC-4
1005-3-A,B	5A-1
1007-4-A,B	7A-1
1000-5-A	WB-6
1000-6-A	WB-7
1000-7-A	WB-8
1000-8-A	WB-9
1005-9-A	5C-1
1005-10-A	5C-2
1007-11-A	7C-1
1007-12-A	7C-2
A-13-A,B	A-2
1000-14-A,B	WC-2
NW-15-A,B	MAGNET PLC
1000-INT2-A	20° BEND PLC
1000-INT1-A	SWITCHER PLC
g-2 TRIMS PLC	g-2 TRIM PLC

APPENDIX

Section A: 1Mw Ripple Filter and Switching Magnet Ripple Filter Design

1Mw Ripple Filter (See Figure 15 for schematic and Figure 16 for bode plot)

1. The desired regulation for the 1Mw power supply is +/-0.01% of maximum (3200A) and the ripple filter was designed for 5 times better (0.002%). For a 6 pulse rectifier with a free wheeling diode:

Vripple maximum(pp)=77.8% of Max DC output of p.s.=320.34v

Iripple(pp)=Vrip(pp)/ωL @ 360Hz=1.1A

$\omega=2\pi f=2\pi(360)=2261.95$

L=128.78mH (total magnet inductance)

0.002% of 3200A=0.064A, required attenuation=20log(0.064/1.1)=-25dB or 0.056

2. From filter curves for m=0.2, ω_o=240.63r/s:

L_1=0.3mH

$C_2=1/(\omega_o^2 L_1)$=57566μF

$R_2=2\sqrt{(L_1/C_2)}$=0.144Ω

$C_1=m(C_2)$=11513μF

3.a) Determining the steady state ripple current through the capacitors:

Vrip out(pp)=0.056*Vrip in (pp)=0.056(320.34)=18v

IripC_2(pp)~Vrip out(pp)/(ZC_2+R_2)=125A -> IripC_2(rms)=44.2A

IripC_1(pp)~Vrip out(pp)/(ZC_1)=469A -> IripC_1(rms)=165A

Power dissipation of R_2~$(44.2)^2$ (0.144Ω)=282W

b) The peak current the capacitors can expect to see was determined by a simulation on Microcap and by using i=Cdv/dt. For initial turn on of power supply assume power supply jumps from 0 to 400v in 20ms:

IpeakC_1~34A per bank (1 bank=4 capacitors, each capacitor=160μF)

IpeakC_2~444A per bank(1 bank=4 capacitors, each capacitor=3600μF)

4.a) Choosing the capacitors for C_1:

Chose 18 banks of 4 capacitors per bank @ 160μF per capacitor, 18(4)160μF=11520μF

1) Expected Irms per bank=165A/18=9.2A~10A
2) Expected Ipeak per bank~34A for 20ms
3) Capacitor Irms limit per bank=29A > Expected Irms per bank
4) Capacitor Ipeak limit per bank~6(steady state limit) for 60ms=6(29A)=174A > 34A
5) Working DC Voltage of Capacitors=450VDC

b) Fuses chosen for each bank of Capacitors = 15A current limiting fuses with a 1A trigger fuse.

1) 15A will blow at 174A in about 90ms
2) 15A fuse > 1.25(Expected Irms per bank)=1.25(10)=12.5A
3) 15A fuse will allow the expexted Ipeak (34A) per bank for 90s
4) Fuse Voltage Rating = 600v
5) Maximum Interrupting Capacity = 200,000A rms symmetrical
6) Size of trigger fuse = 15/10=1.5 so 1 A was chosen since a 1.5 A is not manufactured

5.a) Choosing the capacitors for C_2:

Chose 4 banks of 4 capacitors per bank @ 3600μF per capacitor, 4(4)3600μF=57600μF

1) Expected Irms per bank~11A
2) Expected Ipeak per bank~444A for 20ms
3) Capacitor Irms limit per bank=191A > Expected Irms per bank
4) Capacitor Ipeak limit per bank~6(steady state limit) for 60ms=6(191A)=1146A > 444A
5) Working DC Voltage = 450V

b) Fuses chosen for each bank of Capacitors = 35A current limiting fuses with a 3A trigger fuse.

1) 35A will blow at 1100A in about 15ms
2) 35A fuse > 1.25(Expected Irms per bank)=1.25(11)=13.75A
3) 35A fuse will allow the expexted Ipeak (444A) per bank for 350ms
4) Fuse Voltage rating = 600v
5) Maximum Interrupting Capacity = 200,000A rms symmetrical
6) Size of trigger fuse = 35/10=3.5 so 3 A was chosen since a 3.5 A is not manufactured

5) Resistor R_2 chosen as 0.157Ω ~ 0.144Ω

a) Power rating of R_2 = 392.5W @50A > Expected Power dissipation =282W
b) R_2 Ipeak limit~10(50A)=500A for 5s; Expected Ipeak~444A(4)=1776A for 20ms

6.a) Choosing bleeder resistor Rb_1, one per bank of C_1:

Rb_1=40kΩ.

1) Power rating of Rb_1 = 25W > Expected Power dissipation~$(400)^2$/40kΩ=4W
2) Discharge time of one bank of C_1 capacitors=5τ=5(Rb_1)(4)(160μF)=128s

b) Choosing bleeder resistor Rb_2, one per bank of C_2:

Rb_2=2-3kΩ resistors in parallel per bank of C_2.

1) Power rating of Rb_2 = 200W > Expected Power dissipation~$(400)^2$/1.5kΩ=107W
2) Discharge time of one bank of C_2 capacitors=5τ=5(Rb_2)(4)(3600μF)=105s

1MW Filter

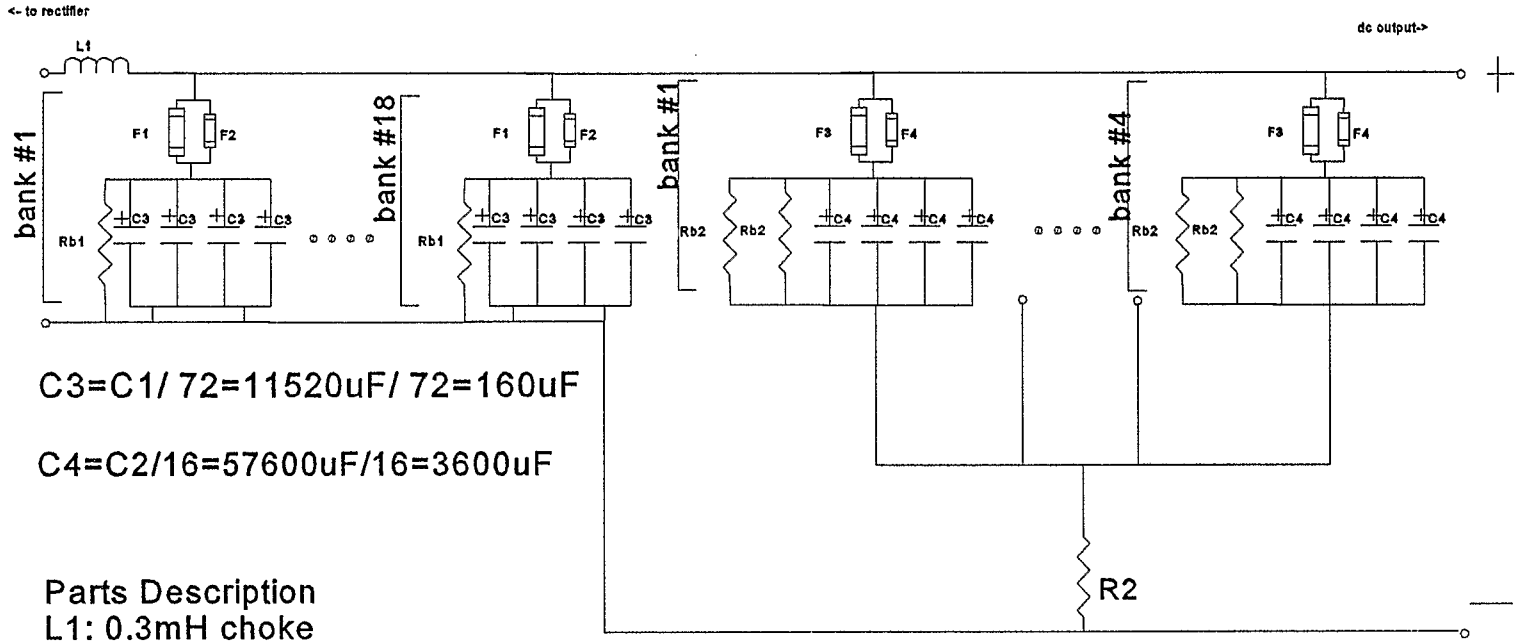

C3=C1/ 72=11520uF/ 72=160uF

C4=C2/16=57600uF/16=3600uF

Parts Description
L1: 0.3mH choke
F1: Bussman 15A,600V fuse
F2: Bussman MIS-1, 1A,600V indicating fuse
F3: Bussman 35 A, 600V fuse
F4: Bussman MIS-3, 1A,600V indicating fuse
Rb1: Ohmite 40kohm/25W resistor
Rb2: Ohmite 3kohm/100W resistor
C3: Cornell Dubilier 160uF Electrolytic Capacitor
C4: Cornell Dubilier 3600uF Electrolytic Capacitor
R2: Post Glover 0.157ohm,50A resistor

c:\rhic\tf\paper\atr25

Figure 15

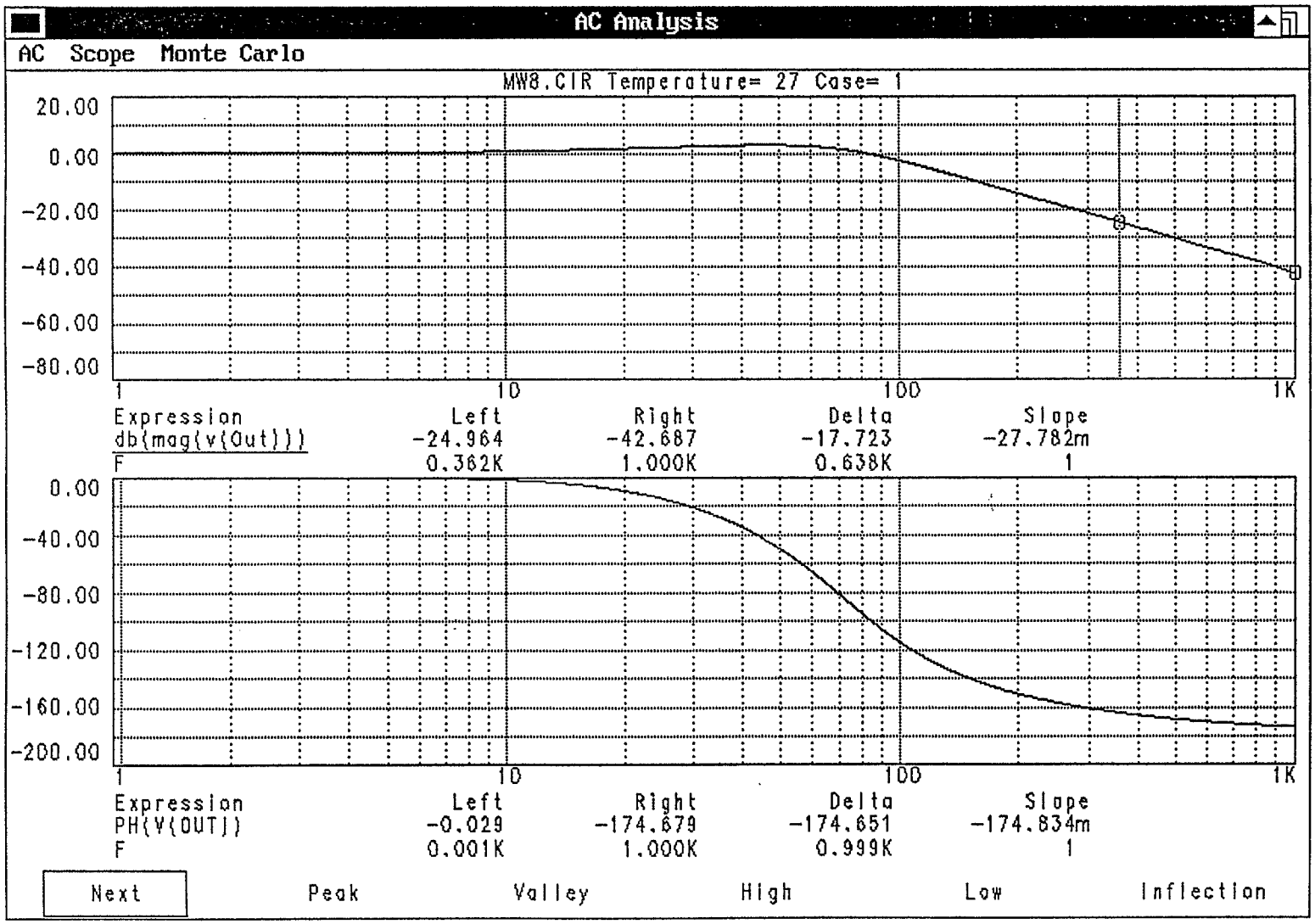
AC Analysis
AC Scope Monte Carlo
MW8.CIR Temperature= 27 Case= 1
20.00
0.00
-20.00
-40.00
-60.00
-80.00
1
10
100
1K
Expression Left Right Delta Slope
db(mag(v(Out))) -24.964 -42.687 -17.723 -27.782m
F 0.362K 1.000K 0.638K 1
0.00
-40.00
-80.00
-120.00
-160.00
-200.00
1
10
100
1K
Expression Left Right Delta Slope
PH(V(OUT)) -0.029 -174.679 -174.651 -174.834m
F 0.001K 1.000K 0.999K 1
Next
Peak
Valley
High
Low
Inflection

Figure 16

Switching Magnet Ripple Filter (See Figure 17 for schematic and Figure 18 for bode plot)
1. The desired regulation for the Switching magnet power supply is +/-0.01% of maximum (3000A) and the ripple filter was designed for 5 times better (0.002%). For a 6 pulse rectifier without a free wheeling diode the maximum voltage ripple occurs when the power supplu is phased back to zero volts and the voltage ripple is = to 100% of the maximum DC output. By adding an SCR switch in series with the filter bank the capacitors will never see this high voltage ripple because the SCR switch will open when the voltage falls below a preset level. The SCR switch will also protect the capacitors from the Cdv/dt that occurs when the switching magnet power supply ramps up and down in current. The SCR switch will close when the power supply reaches flat-top and the filter bank will be switched in. To determine the maximum voltage ripple the filter bank will see 77.8% of max DC output was also used here even though there is no free-wheeling diode:

Vripple maximum(pp)=77.8% of Max DC output of p.s.=115.53v
Iripple(pp)=Vrip(pp)/ωL @ 360Hz=2.86A
ω=2πf=2π(360)=2261.95
L=17.8mH (total magnet inductance)

0.002% of 3000A=0.06A, required attenuation=20log(0.06/2.86)=-35dB or 0.018

2. From filter curves for m=0.2, ω_o=133.06r/s:

L_1=0.3mH
$C_2=1/(\omega_o^2 L_1)$=188271μF
$R_2=2\sqrt{(L_1/C_2)}$=0.08Ω
$C_1=m(C_2)$=37654μF

3.a) Determining the steady state ripple current through the capacitors:

Vrip out(pp)=0.018*Vrip in (pp)=0.018(115.53)=2.08v
IripC_2(pp)~Vrip out(pp)/(ZC_2+R_2)=26A -> IripC_2(rms)=9A
IripC_1(pp)~Vrip out(pp)/(ZC_1)=175A -> IripC_1(rms)=62A
Power dissipation of R_2~$(9)^2$ (0.08Ω)~7W

b) The peak current the capacitors can expect to see was determined by a simulation on Microcap which includes the Equivalent Series Resistance of each capacitor. For initial turn on of power supply assume power supply jumps from 0 to 120v in about 20ms:

IpeakC_1~24A per bank (1 bank=1 capacitor, each capacitor=3000μF)
IpeakC_2~35A per bank(1 bank=1 capacitors, each capacitor=9000μF)

4.a) Choosing the capacitors for C_1:

Chose 13 banks of 1 capacitor per bank @ 3000μF per capacitor, 13(3000μF)=39000μF
1) Expected Irms per bank=62A/13=4.77A~5A
2) Expected Ipeak per bank~24A for 20ms
3) Capacitor Irms limit per bank=32A > Expected Irms per bank
4) Capacitor Ipeak limit per bank~6(steady state limit) for 60ms=6(32A)=192A > 24A
5) Working DC Voltage of Capacitors=250VDC

4b) Fuses chosen for each bank of Capacitors = 6.25A current limiting fuses with a 1A trigger fuse.

1) 6.25A will blow at 192A in about 60ms
2) 6.25A fuse ≥ 1.25(Expected Irms per bank)=1.25(5)=6.25A
3) 6.25A fuse will allow the expexted Ipeak (24A) per bank for 15s
4) 6.25A Fuse Voltage Rating = 250v
5) Maximum Interrupting Capacity = 200,000A rms symmetrical
6) Size of trigger fuse = 6.25/10=0.625 so 1 A was chosen since a 0.625 A is not manufactured

5.a) Choosing the capacitors for C_2:

Chose 21 banks of 1 capacitor per bank @ 9000μF per capacitor, (21)9000μF=189000μF

1) Expected Irms per bank~0.5A
2) Expected Ipeak per bank~35A for 20ms
3) Capacitor Irms limit per bank=33A > Expected Irms per bank
4) Capacitor Ipeak limit per bank~6(steady state limit) for 60ms=6(33A)=198A > 35A
5) Working DC Voltage = 250V

b) Fuses chosen for each bank of Capacitors = 6.25A current limiting fuses with a 1A trigger fuse.

1) 6.25A will blow at 198A in about 60ms
2) 6.25A fuse > 1.25(Expected Irms per bank)=1.25(0.5)=0.625A
3) 6.25A fuse will allow the expexted Ipeak (35A) per bank for 7s
4) 6.25A Fuse Voltage rating = 250v
5) Maximum Interrupting Capacity = 200,000A rms symmetrical
6) Size of trigger fuse = 6.25/10=0.625 so 1 A was chosen since a 0.625 A is not manufactured

5) Resistor R_2 chosen as 0.077Ω ~ 0.08Ω

a) Power rating of R_2 = 4020W @228A > Expected Power dissipation =7W
b) R_2 Ipeak limit~10(228A)=2280A for 5s; Expected Ipeak~35A(21)=735A for 20ms

6.a) Choosing bleeder resistor Rb_1, one per bank of C_1:

Rb_1=2kΩ.

1) Power rating of Rb_1 = 25W > Expected Power dissipation~$(140)^2$/2kΩ=9.8W
2) Discharge time of one bank of C_1 capacitors=5τ=5(Rb_1)(3000μF)=30s

b) Choosing bleeder resistor Rb_2, one per bank of C_2:

Rb_2=2kΩ.

1) Power rating of Rb_2 = 25W > Expected Power dissipation~$(140)^2$/2kΩ=9.8W
2) Discharge time of one bank of C_2 capacitors=5τ=5(Rb_2)(9000μF)=90s

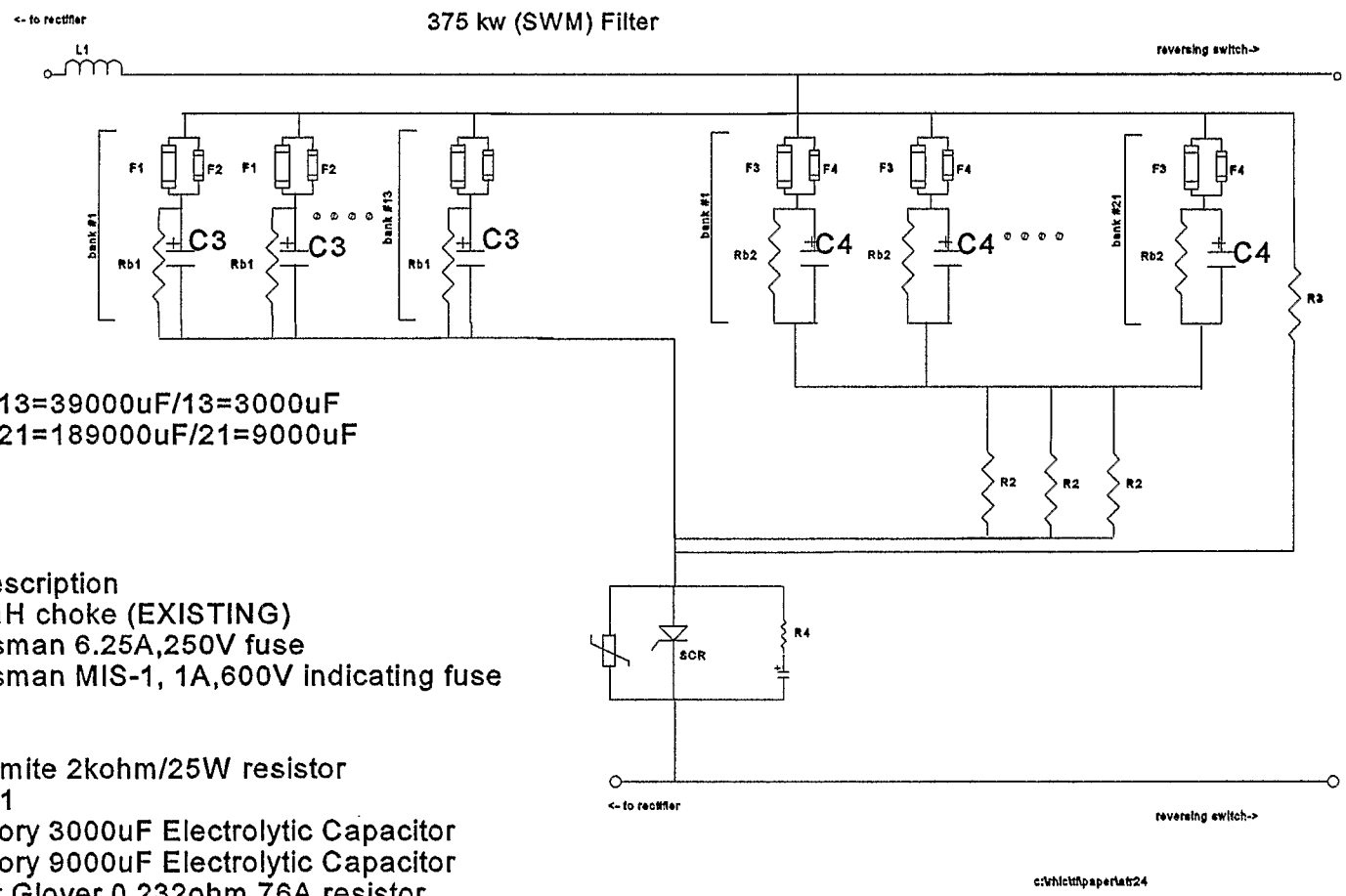

C3=C1/13=39000uF/13=3000uF
C4=C2/21=189000uF/21=9000uF

Parts Description
L1: 0.3mH choke (EXISTING)
F1: Bussman 6.25A,250V fuse
F2: Bussman MIS-1, 1A,600V indicating fuse
F3=F1
F4=F2
Rb1: Ohmite 2kohm/25W resistor
Rb2=Rb1
C3: Mallory 3000uF Electrolytic Capacitor
C4: Mallory 9000uF Electrolytic Capacitor
R2: Post Glover 0.232ohm,76A resistor
SCR: Westcode N600CH10
R3: stainless steel adjustable Resistor

Figure 17

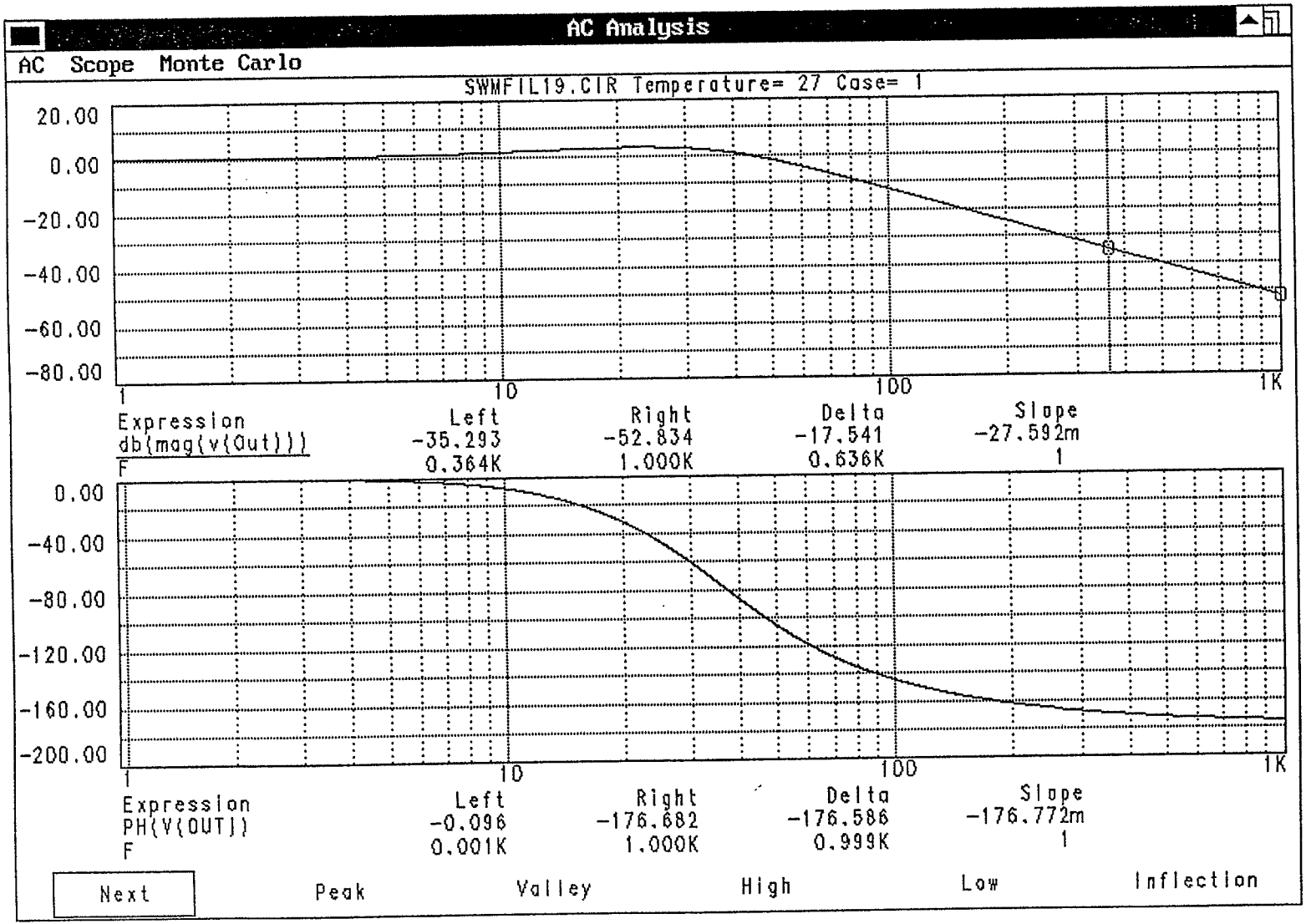
AC Analysis
AC Scope Monte Carlo
SWMFIL19.CIR Temperature= 27 Case= 1
20.00
0.00
-20.00
-40.00
-60.00
-80.00
1
10
100
1K
Expression
db(mag(v(Out)))
F
Left
-35.293
0.364K
Right
-52.834
1.000K
Delta
-17.541
0.636K
Slope
-27.592m
1
0.00
-40.00
-80.00
-120.00
-160.00
-200.00
1
10
100
1K
Expression
PH(V(OUT))
F
Left
-0.096
0.001K
Right
-176.682
1.000K
Delta
-176.586
0.999K
Slope
-176.772m
1
Next
Peak
Valley
High
Low
Inflection

Figure 18

Section B

1MW Power Supply Ground Fault System

A new ground fault circuit was designed for the 1MW power supply. This new circuit is more sensitive and the power supply ground has been moved from the positive output terminals to the center (see Figure 19). If the power supply ground was on the output terminal then from one terminal to ground there would be +350v. This 350v would also be present on the first magnet attached to the power supply output terminal. By placing the ground in the center the first magnet sees only +175volts to ground. The ground fault circuit is made up of 2-100Ω resistors in series across the output of the power supply and then a 1Ω resistor that is tapped off the center of the two 100Ω resistors. When there is a ground fault, current will flow through one of the 100Ω resistors and the 1Ω resistor creating a voltage across the 1Ω resistor. This current can flow in either direction through the 1Ω resistor therefore the voltage across the 1Ω resistor can also flip positive or negative. The absolute value circuit takes that voltage and makes it positive. The voltage from the absolute value circuit is then fed to the ground fault relay in Figure 19 which is a DC millivolt sensing alarm relay. The nominal trip voltage for this relay is 100mv and can be adjusted from 40% to 120% of this nominal value. The range voltage the relay will trip at is from 40mv to 120mv which will be present across the 1Ω resistor. The current range through the 1Ω resistor will be 40mA to 120mA that will cause the relay to trip. 40ma·100Ω=4v and 120ma·100Ω=12v. The voltage range, at either power supply output terminal to ground, to trip the power supply on a ground fault is approximately 4.04v to 12.12v depending on the setting of the ground fault relay. The operating current for this power supply is about 2800A and the resistance of one magnet is about 3.14mΩ. The voltage across one magnet is about 8.8v. This 8.8 volts is between 4.04v and 12.12v therefore this circuit will cause the power supply to trip on a ground fault if the ground fault occurs as close to ground as about ½ a magnet ($^{8.8v}/_{2}$=4.4v). If the ground fault occurs closer to ground than about 4.04v then the power supply will not trip on a ground fault.

The absolute value circuit in Figure 19 has a dedicated ±15v power supply which is monitored. If this ±15v power supply fails the power supply will trip off..

The 100Ω resistors are rated for 650W each for a total of 1300W. The expected power dissipation should be less than 800W. The 1Ω resistor is actually made up of 2-0.5Ω stock BNL resistors rated at 21W each so the total power rating for the 1Ω resistor is 42W. If the power supply develops a ground fault, the power supply should trip when the ground fault is ≥ 12.12v for the high end adjustment, which means the power dissipated in the 1Ω resistor would be about 14.4mW. However, if there was a ground fault which reached 350v and the power supply did not trip because something failed then the 1Ω resistors would have a current = to 350v/(100+1)=3.5A giving a power dissipation of 12.25W and they could still handle this.

1MW Ground Fault Circuit

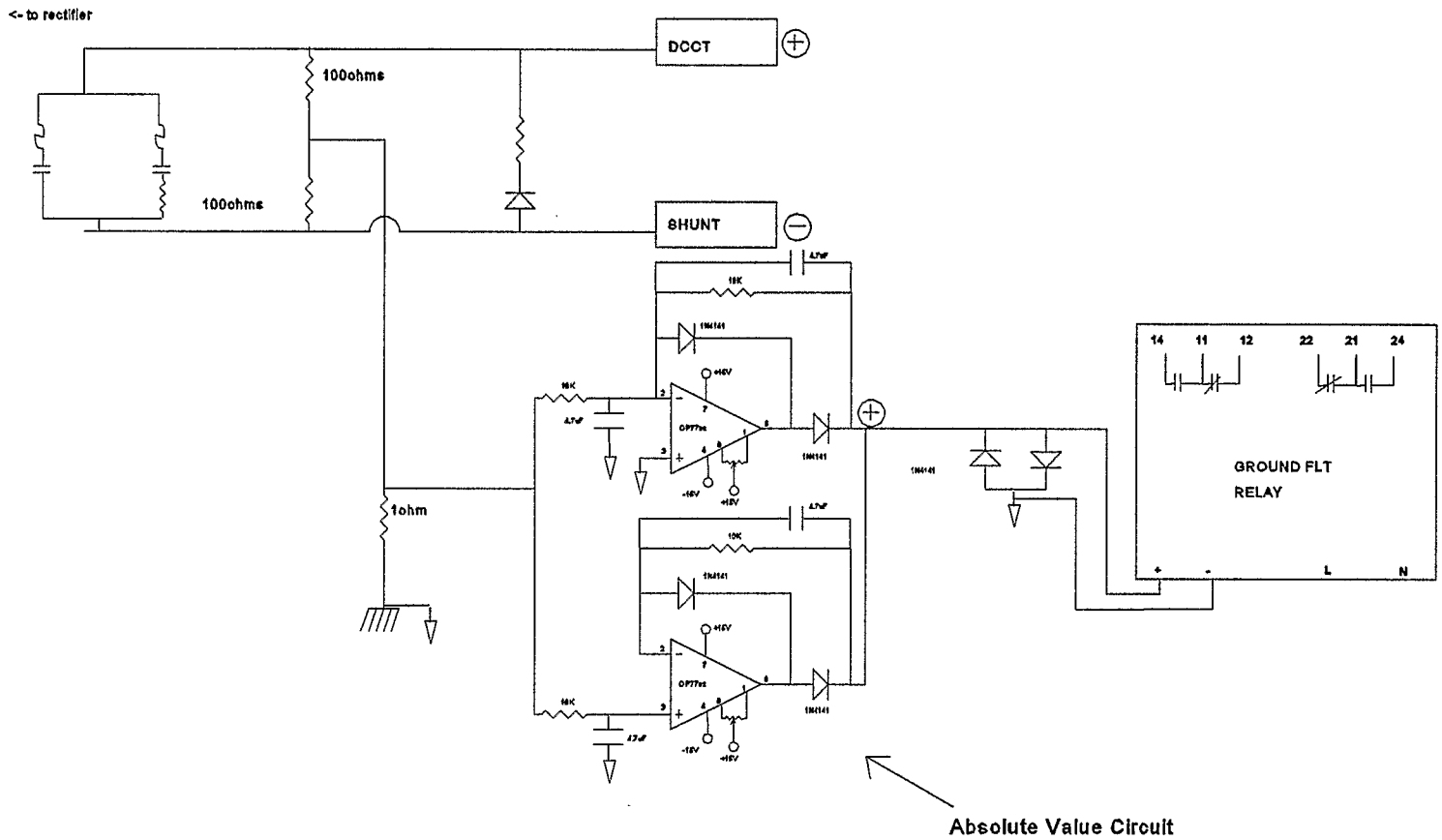

Figure 19

c:\rhlctl\paper\atr26

Section C

1MW Power Supply Feedback Loop Analysis

A network analyzer was used to determine the closed loop bandwidth of the voltage loop and the current loop of power supply 1MW-1. A model was built in a circuit analysis program (Microcap) to better understand and confirm the results from the network analyzer. This model will also help to predict different closed loop bandwidths based on different compensation settings without having to use the network analyzer and the actual power supply. Figure 20 is the model of the regulator built in Microcap. Figures 21 and 22 are block diagrams of this circuit model. This regulator consists of a voltage loop within a current loop. Figure 21 is a block diagram of the voltage loop in Figure 20. TP5 is the reference to the voltage loop. A5 is the voltage loop error amplifier. A7 is a gain stage with some additional filtering. A8 is a simplified model used for a resistor (R68) in the regulator card which feeds the SCR firing cards. A8 is also a model for the firing cards and the SCR's. The output is then fed back through a voltage divider to amplifiers A4A-A4D which filter the 360hz ripple of the power supply. This signal (TP6) is then summed at the voltage loop error amplifier A5. A DC analysis of the voltage loop (with B=1) in Figure 21 says that VcL=-1.4465dB. In Figure 23 photo #2 the network analyzer shows the DC gain to be about -1.233dB and a closed loop voltage bandwidth of about 10Hz. The top plot in the photos is Magnitude vs Frequency and the bottom plot is Phase vs Frequency. Figure 26 is the analysis Microcap performed on the circuit model. Figure 26 has a DC gain of about -1.494dB and a closed loop voltage bandwidth of about 12Hz (3dB bandwidth). Further analysis on the voltage loop were performed. Photo #1 in Figure 23 is a plot of TP5 to TP7 in the voltage loop. The photo shows a DC gain of about -13.42dB and a 3dB bandwidth of about 13Hz. Figure 25 is the analysis from Microcap of TP5 to TP7 which shows a DC gain of -13.686dB and a 3dB bandwidth of 11.335Hz. Photo #3 in Figure 23 is a plot of TP8 to TP9 in the voltage loop. The photo shows a DC gain of about -0.3893dB and a 3dB bandwidth of about 1Hz. Figure 27 is the analysis from Microcap of TP8 to TP9 which shows a DC gain of -0.422dB and a 3dB bandwidth of 1.123Hz. Figure 22 is a block diagram of the current loop in Figure 20. This block diagram contains the closed loop DC block of the voltage loop from Figure 21 (VcL=68.5). TP1 is the current loop reference. A2 is the current loop error amplifier. A3 is an amplifier which can have different compensation settings for different bandwidths. The output of A3 is TP4 or TP5. They are both the same in this analysis. This then becomes the reference to the voltage loop. The magnet load then has its current fed back by a DCCT which then gets multiplied by 0.5 in A1. The feedback signal (TP2) is then summed at the current loop error amplifier A2. A DC analysis of the current loop in Figure 22 (with B=1) shows IcL=-0.0158dB. In Figure 24 photo #4 the DC gain of the current loop is about IcL=+0.03195dB and the closed loop bandwidth is about 4Hz. Figure 28 is the analysis Microcap performed on the current loop in its model of Figure 20. Microcap predicted a DC gain of IcL=-0.027dB and a closed loop 3dB bandwidth of 3.525Hz.

This circuit model, with some modification, can be used on the other refurbished power supplies in the ATR line to predict and improve their bandwidths.

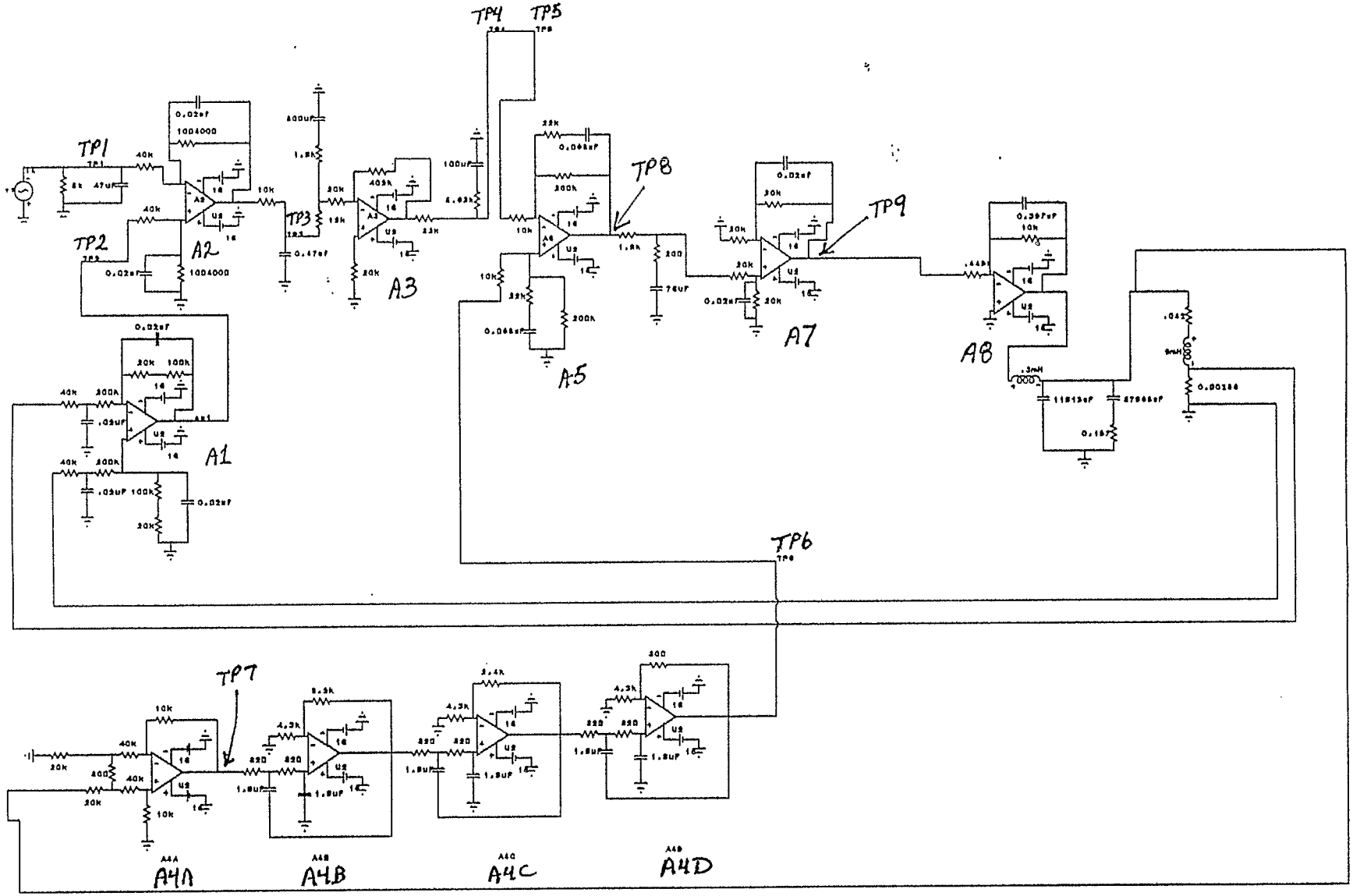

Figure 20

1 M W 1

VOLTAGE LOOP

DC Analysis-Block Diagram

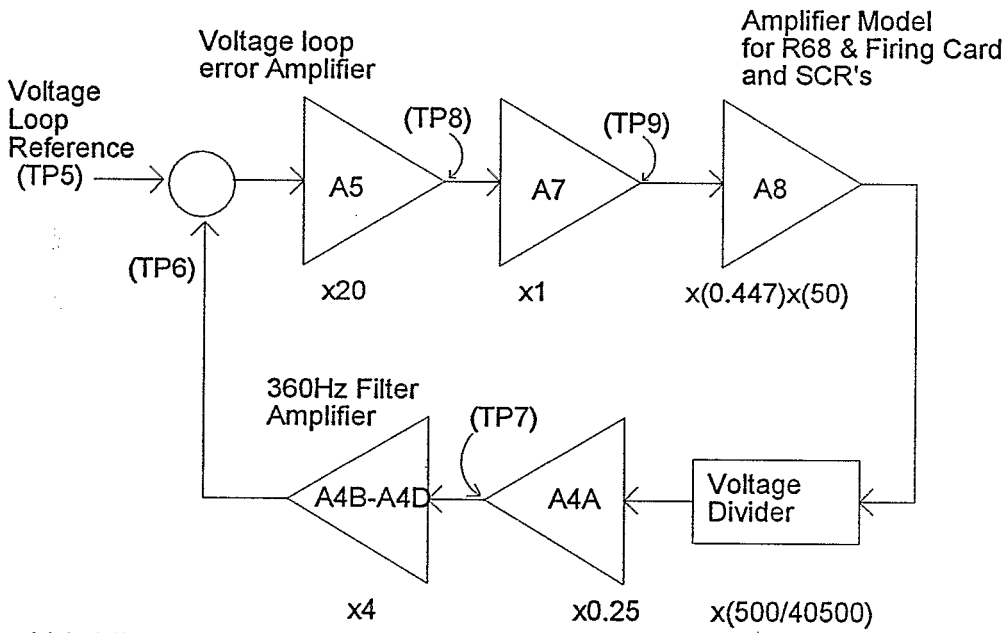

VoL=V(open loop)
VoL=20x1x0.447x50x(500/40500)x0.25x4=5.51
VcL=V(closed loop)=VoL/(1+BxVoL)
B=1
VcL=5.51/(1+5.51)=0.84659=-1.4465dB
Photo #2 shows a measurement of the DC gain as -1.223dB

OR

VoL=V(open loop)
VoL=20x1x0.447x50=447
VcL=V(closed loop)=VoL/(1+BxVoL)
B=4x0.2x(500/40500)=0.012346
VcL=447/(1+0.012346x447)=68.5

Figure 21

c:\rhic\tl\atr22

CURRENT LOOP

DC Analysis-Block Diagram

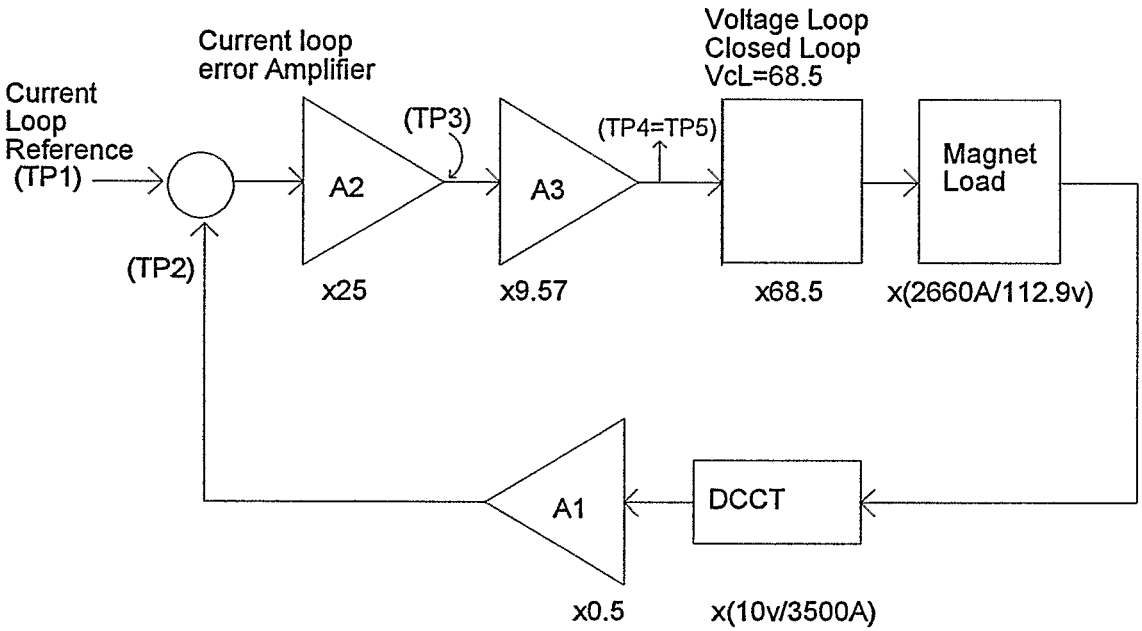

IoL=I(open loop)
IoL=25x9.57x68.5x(2660A/112.9v)x(0.5)x(10v/3500A)=551.6
IcL=I(closed loop)=IoL/(1+BxIoL)
B=1
IcL=551.6/(1+551.6)=0.9982=-0.0158dB
Photo #4 shows a measurement of the DC gain as +0.03195dB

OR

IoL=I(open loop)
IoL=25x9.57x68.5x(2660A/112.9v)=386127.04
IcL=I(closed loop)=IoL/(1+BxIoL)
B=(10/3500)x0.5x386127.04=0.001429
IcL=386127.04/(1+0.001429x386127.04)=698.74
1+BxIoL=552, Linearity test measured 1+BxIoL=468

Figure 22

c:\rhic\tl\atr23

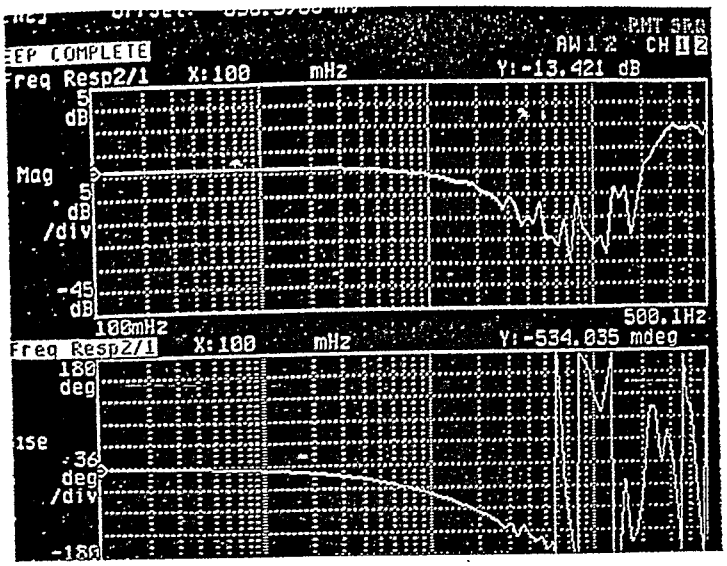

Photo #1
Voltage Mode
TP5-TP7(A4A pin3)

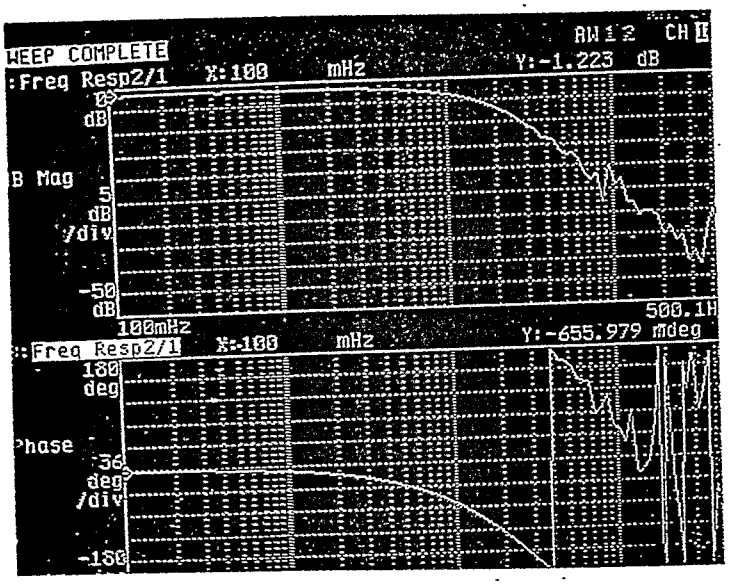

Photo #2
Voltage Mode
TP5-TP6

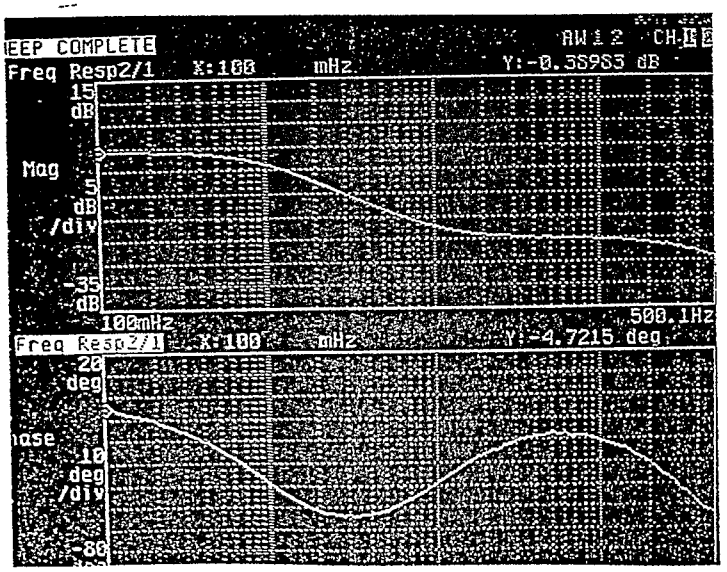

Photo #3
Voltage Mode
TP8-TP9

Figure 23

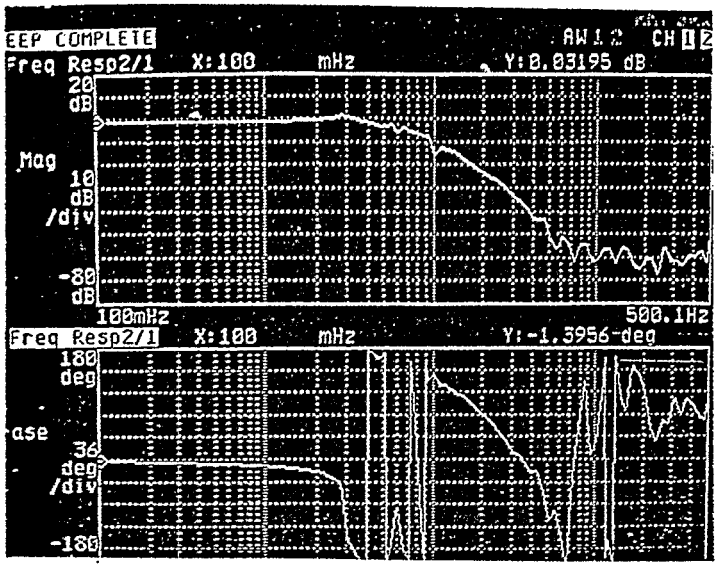

Photo #4
Current Mode
TP1-TP2

Figure 24

Voltage Mode
TP5-TP7

	Here	Photo#1
DC gain	-13.686dB	-13.42dB
3dB B.W.	11.335Hz	13Hz

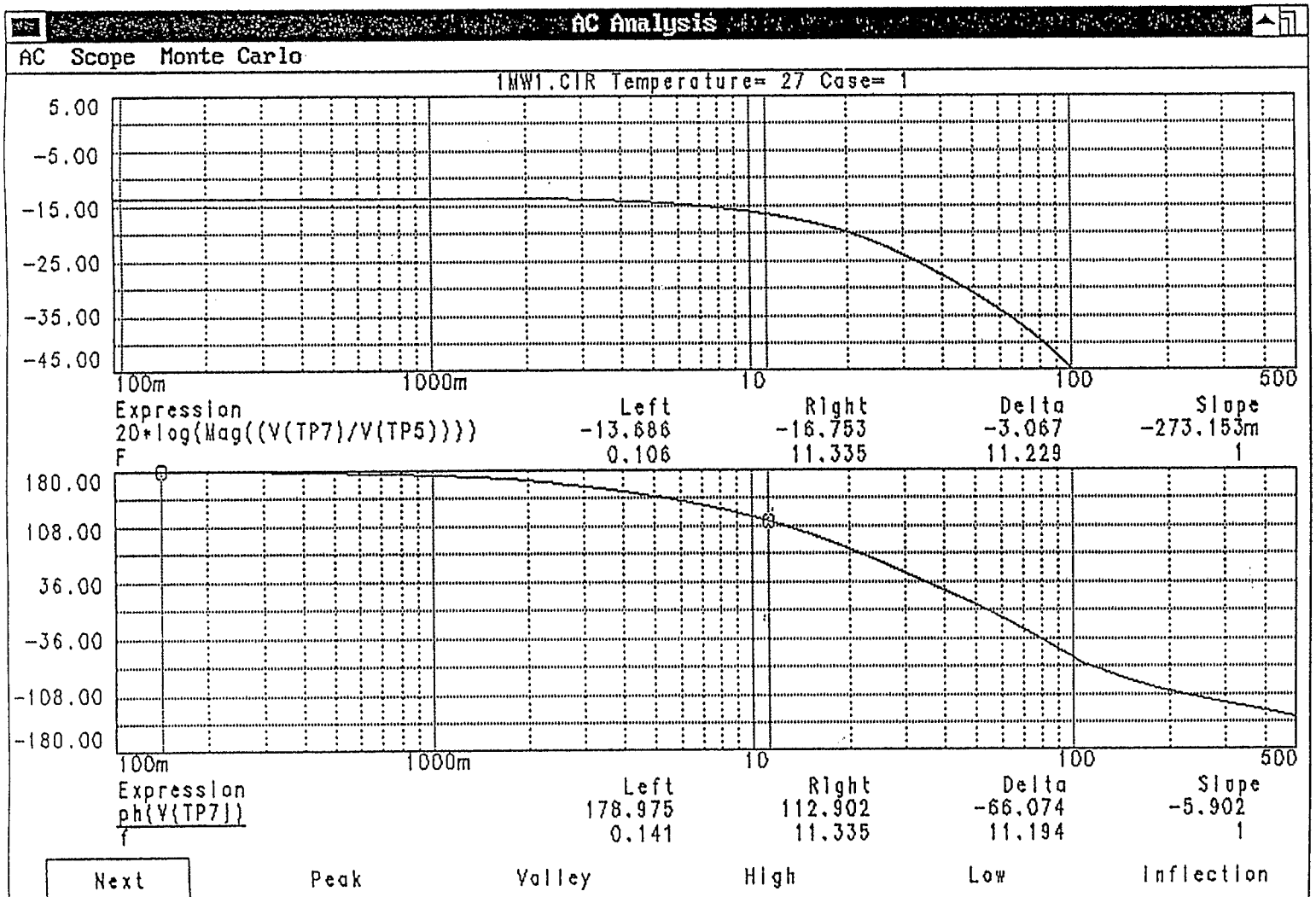

Figure 25

Voltage Mode
TP5-TP6

	Here	Photo#2
DC gain	-1.494dB	-1.233dB
3dB B.W.	12Hz	10Hz

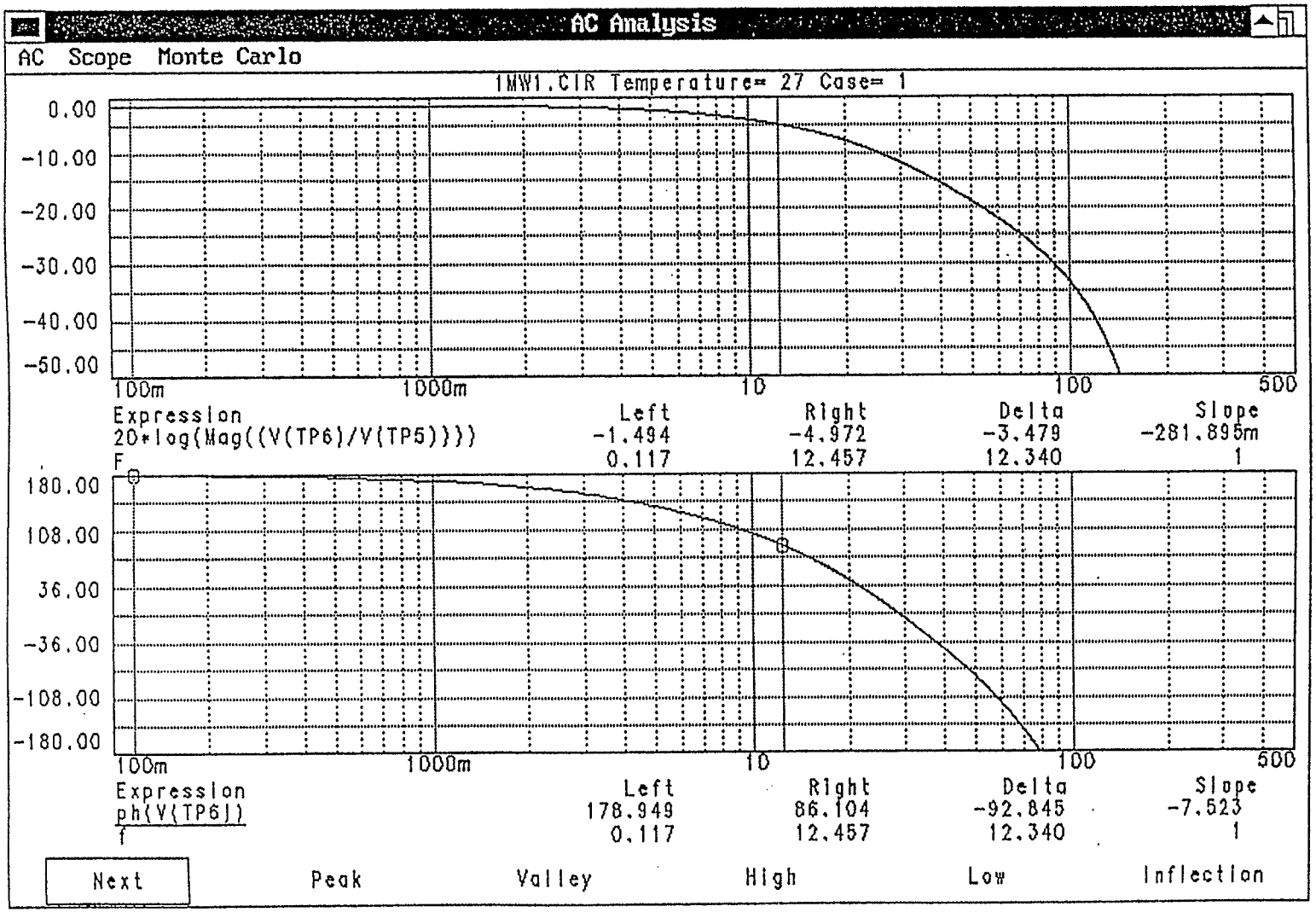

Figure 26

Voltage Mode
TP8-TP9

	Here	Photo#3
DC gain	-0.422dB	-0.3893dB
3dB B.W.	1.123Hz	1Hz

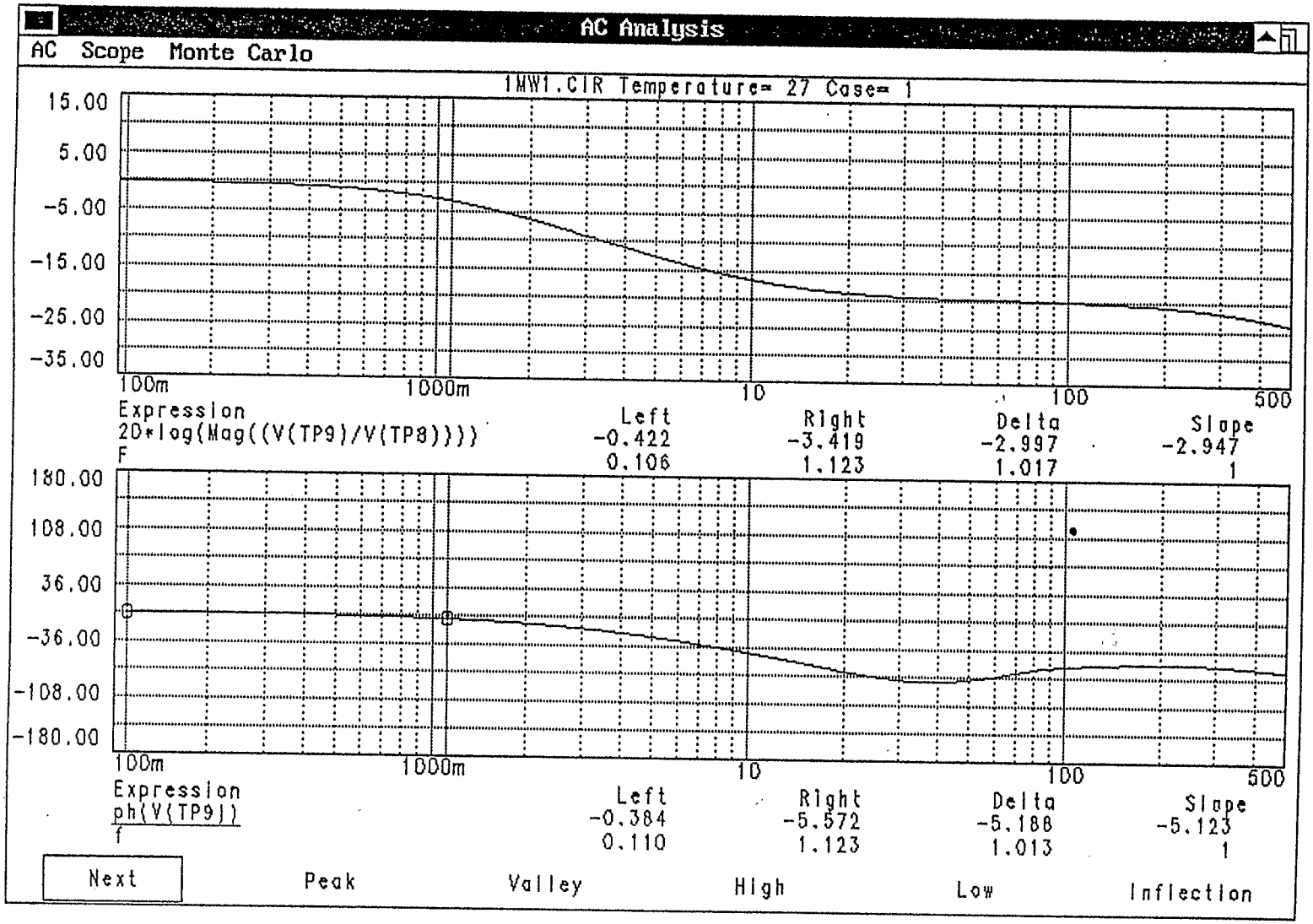

Figure 27

Current Mode
TP1-TP2

	Here	Photo#4
DC gain	-0.027dB	+0.03195dB
3dB B.W.	3.525Hz	4Hz

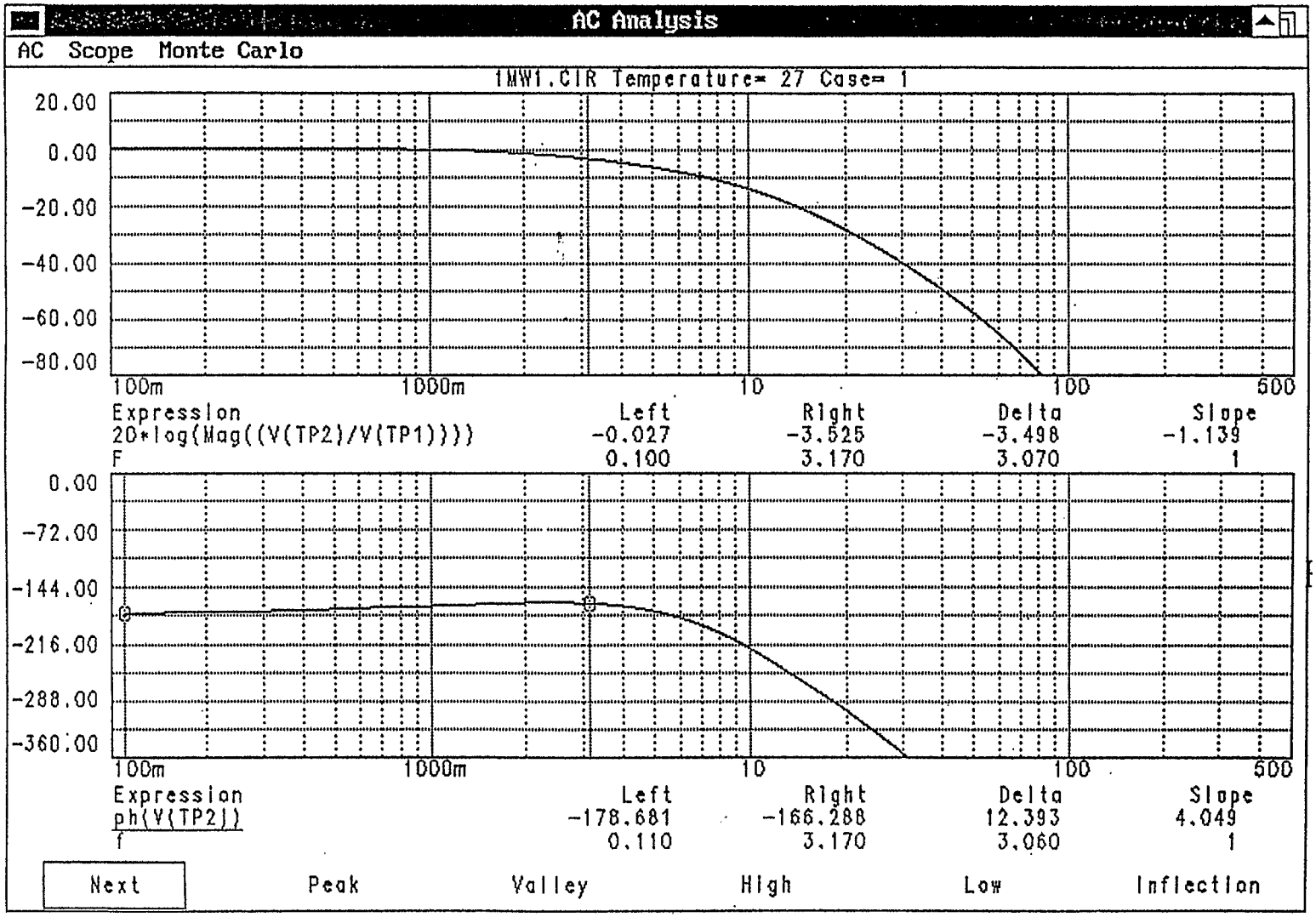

Figure 28

Section D

Power Supply Houses One Line Diagrams
(see next page)

A HOUSE & A TRAILER ONE LINE DIAGRAM

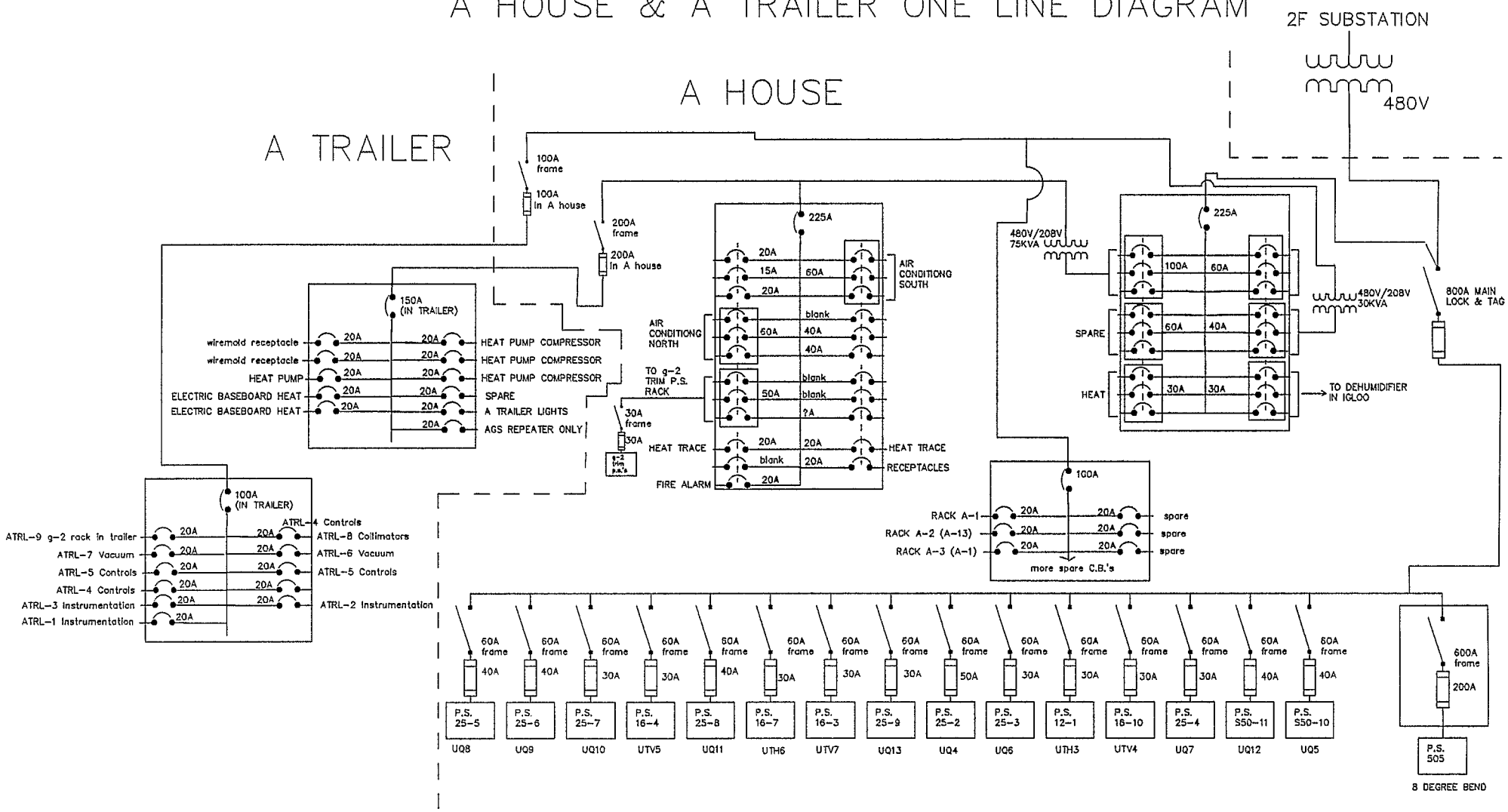

Figure 29

C:\RHIC\U\paper\AHSELIN1 4/3/96

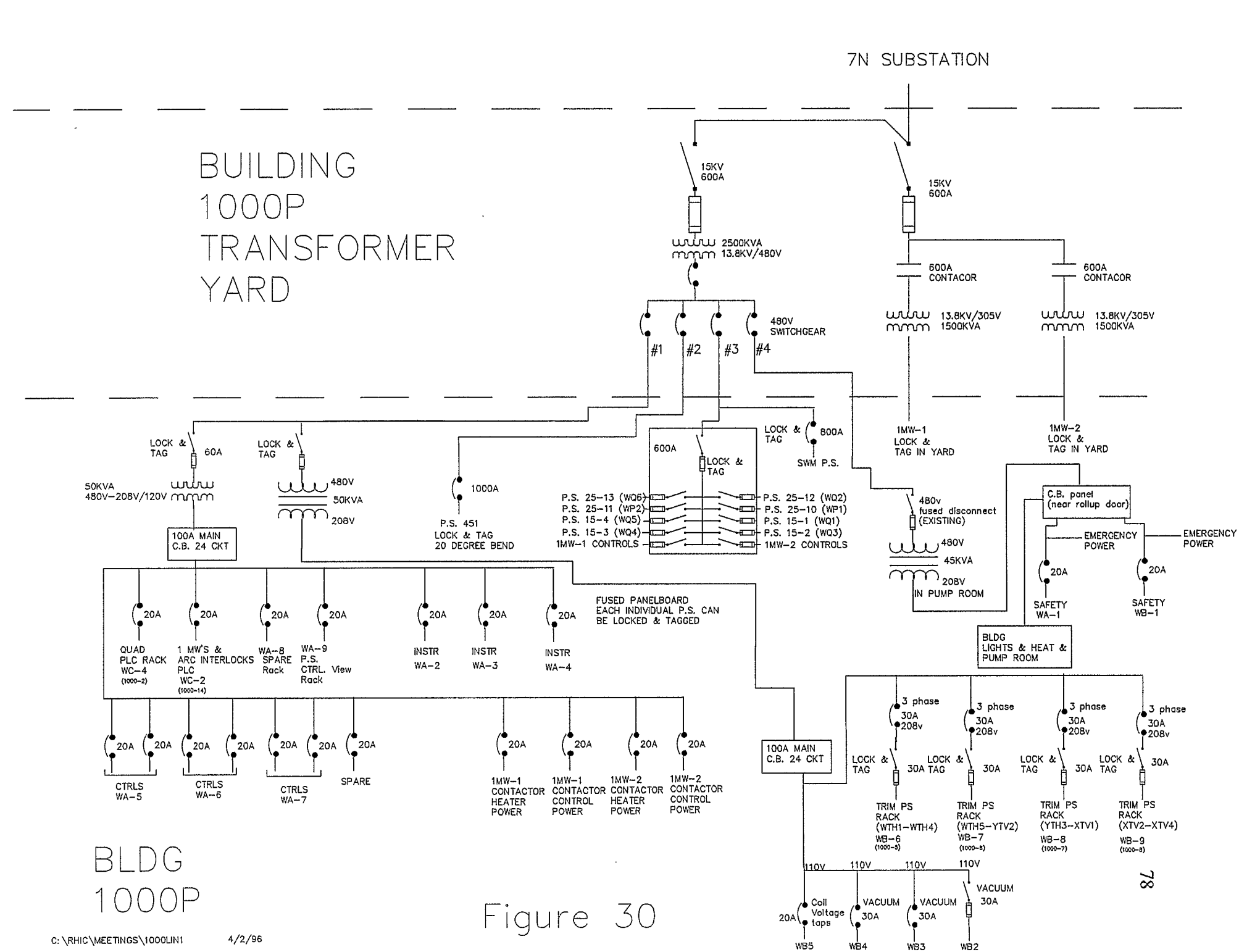

BLDG
1000P

Figure 30

C:\RHIC\MEETINGS\1000LIN1 4/2/96

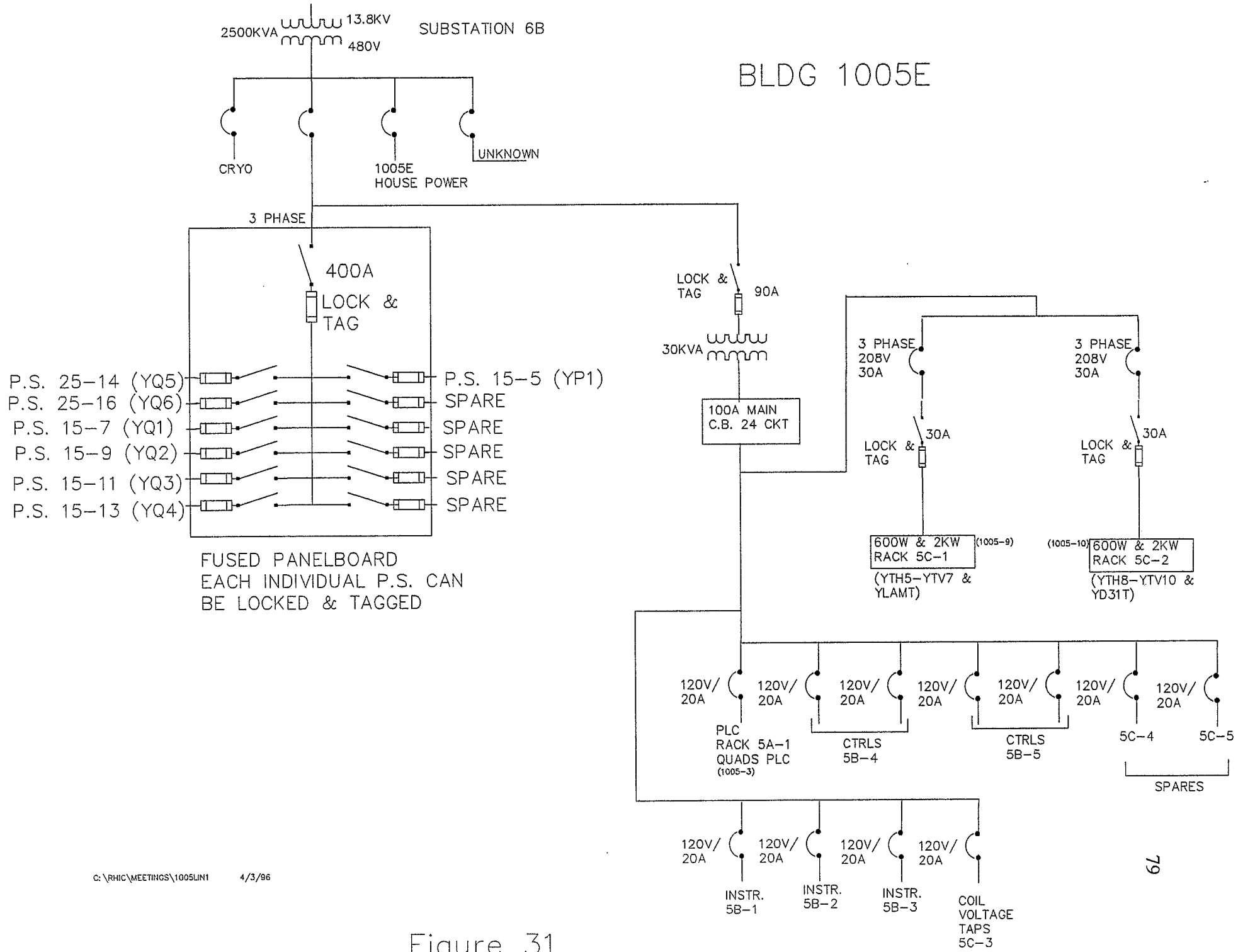
2500KVA
13.8KV
480V
SUBSTATION 6B
BLDG 1005E
CRYO
1005E
HOUSE POWER
UNKNOWN
3 PHASE
400A
LOCK &
TAG
P.S. 25-14 (YQ5)
P.S. 25-16 (YQ6)
P.S. 15-7 (YQ1)
P.S. 15-9 (YQ2)
P.S. 15-11 (YQ3)
P.S. 15-13 (YQ4)
P.S. 15-5 (YP1)
SPARE
SPARE
SPARE
SPARE
FUSED PANELBOARD
EACH INDIVIDUAL P.S. CAN
BE LOCKED & TAGGED
LOCK &
TAG
90A
30KVA
100A MAIN
C.B. 24 CKT
3 PHASE
208V
30A
30A
LOCK &
TAG
600W & 2KW
RACK 5C-1
(1005-9)
(YTH5-YTV7 &
YLAMT)
(1005-10)
600W & 2KW
RACK 5C-2
(YTH8-YTV10 &
YD31T)
120V/
20A
PLC
RACK 5A-1
QUADS PLC
(1005-3)
CTRLS
5B-4
CTRLS
5B-5
5C-4
5C-5
SPARES
INSTR.
5B-1
INSTR.
5B-2
INSTR.
5B-3
COIL
VOLTAGE
TAPS
5C-3
C:\RHIC\MEETINGS\1005LIN1
4/3/96

Figure 31

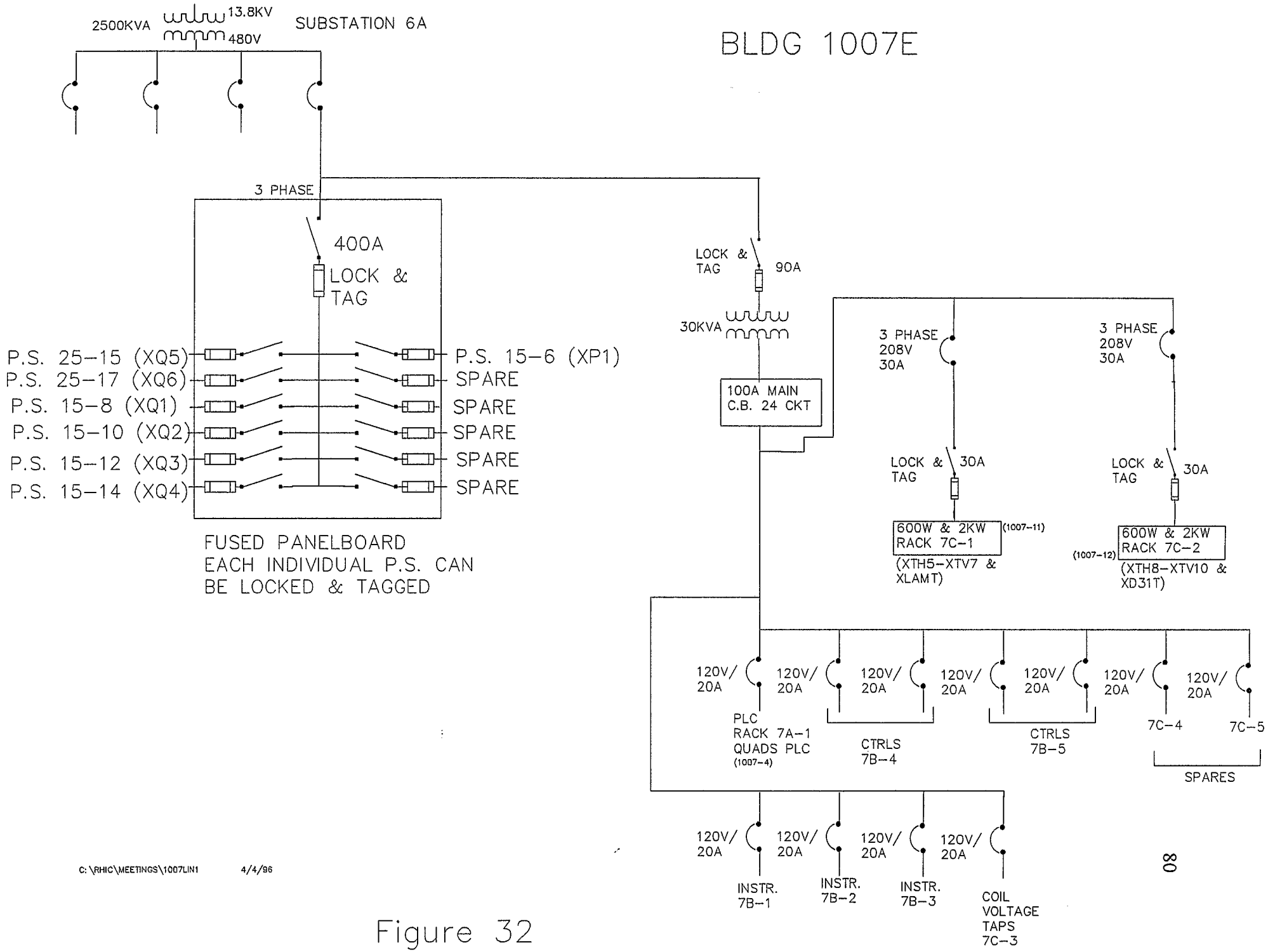
2500KVA
13.8KV
480V
SUBSTATION 6A
BLDG 1007E
3 PHASE
400A
LOCK & TAG
P.S. 25-15 (XQ5)
P.S. 25-17 (XQ6)
P.S. 15-8 (XQ1)
P.S. 15-10 (XQ2)
P.S. 15-12 (XQ3)
P.S. 15-14 (XQ4)
P.S. 15-6 (XP1)
SPARE
SPARE
SPARE
SPARE
FUSED PANELBOARD
EACH INDIVIDUAL P.S. CAN
BE LOCKED & TAGGED
LOCK & TAG
90A
30KVA
100A MAIN
C.B. 24 CKT
3 PHASE
208V
30A
3 PHASE
208V
30A
LOCK & TAG
30A
LOCK & TAG
30A
600W & 2KW
RACK 7C-1
(1007-11)
(XTH5-XTV7 & XLAMT)
600W & 2KW
RACK 7C-2
(1007-12)
(XTH8-XTV10 & XD31T)
120V/ 20A
PLC
RACK 7A-1
QUADS PLC
(1007-4)
CTRLS
7B-4
CTRLS
7B-5
7C-4
7C-5
SPARES
INSTR.
7B-1
INSTR.
7B-2
INSTR.
7B-3
COIL
VOLTAGE
TAPS
7C-3
C:\RHIC\MEETINGS\1007LIN1
4/4/96

Figure 32

Section E
PLC Data Highway Plus (DH+) and Remote I/O layouts.

Data Highway Plus Network:

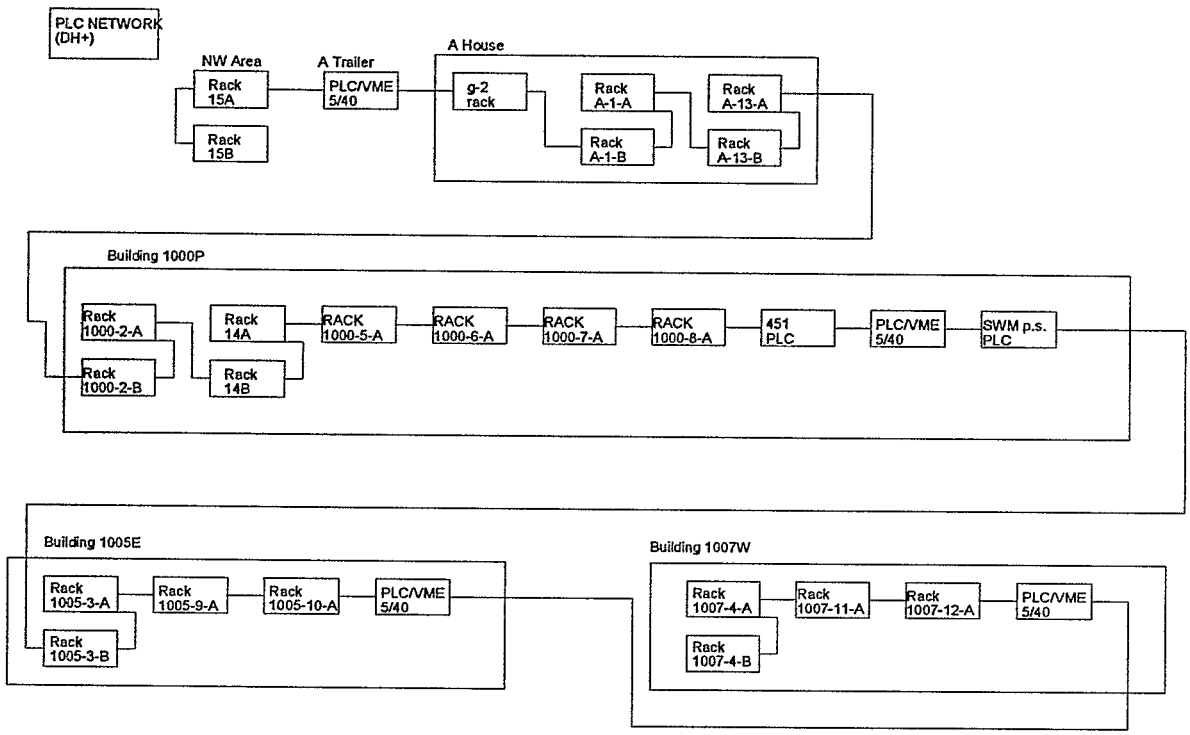

Figure 33

Remote I/O Networks:

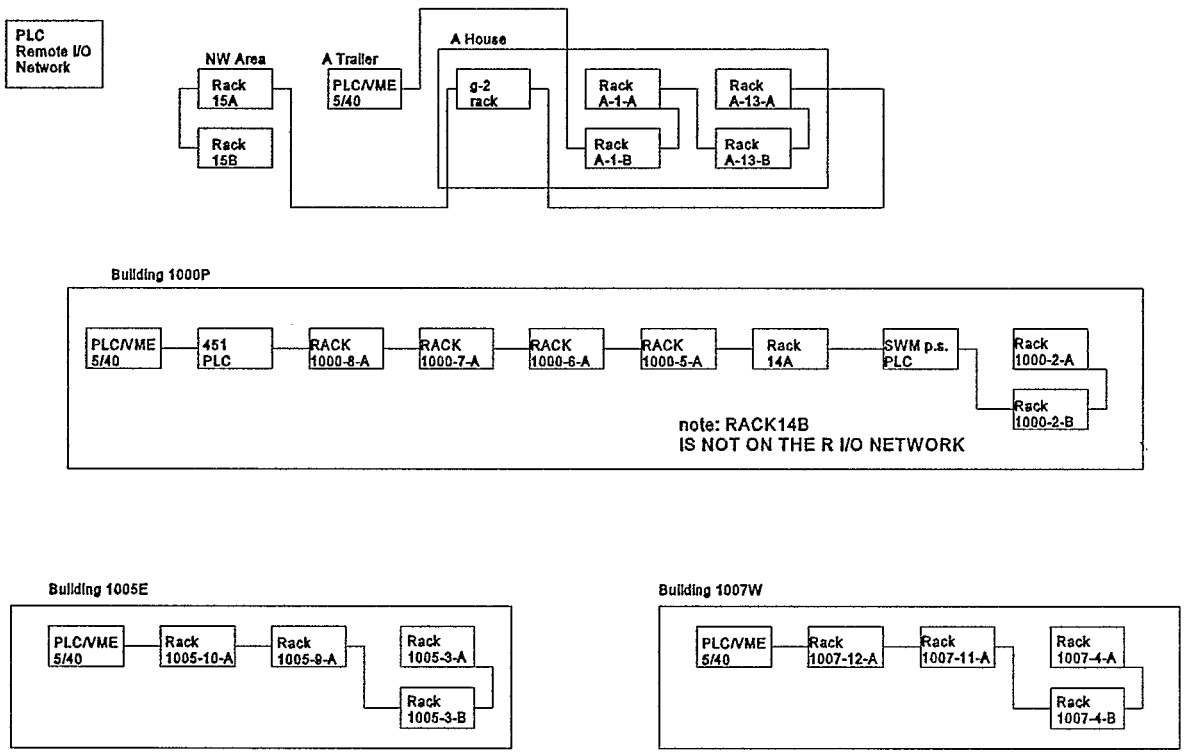

Figure 34

c:\rhic\l\atr12

Section F

Power Supply Analog Control and Computer Interface Layouts

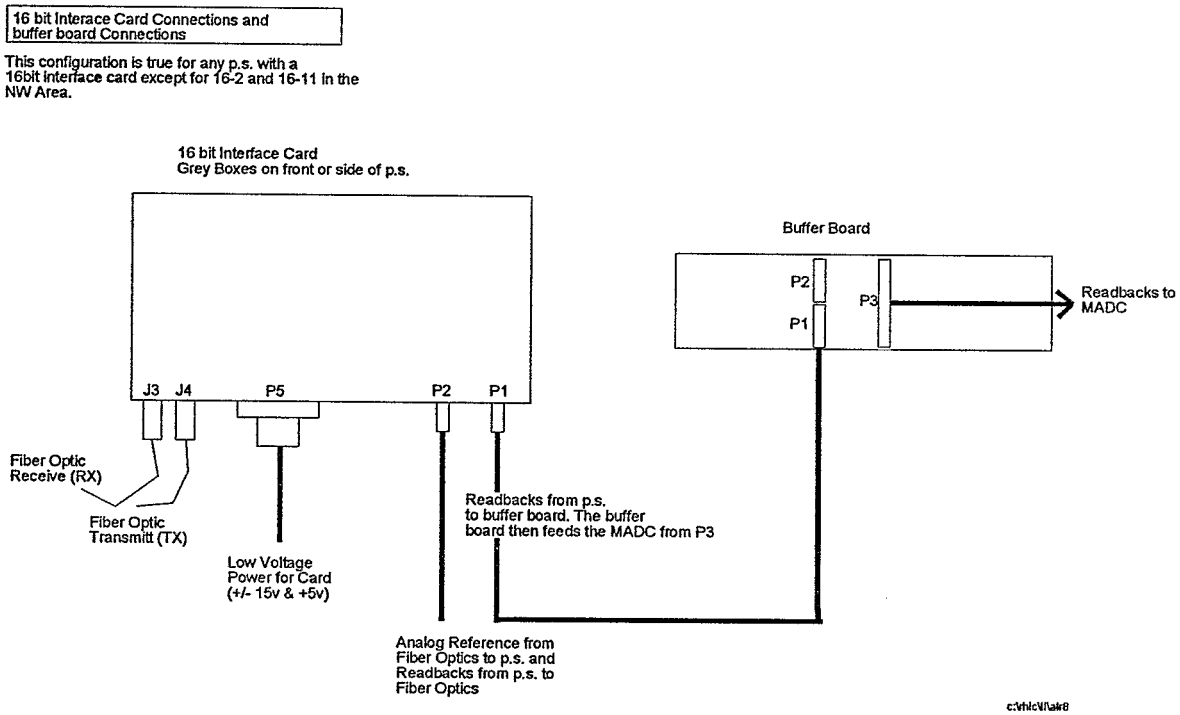

Figure 35

Figure 36 shows connections from the 16 bit interface card to 2 low precision power supplies in the NW area which did not need the 16 bit card but no MADC's were available so two of the 16 bit cards were used instead.

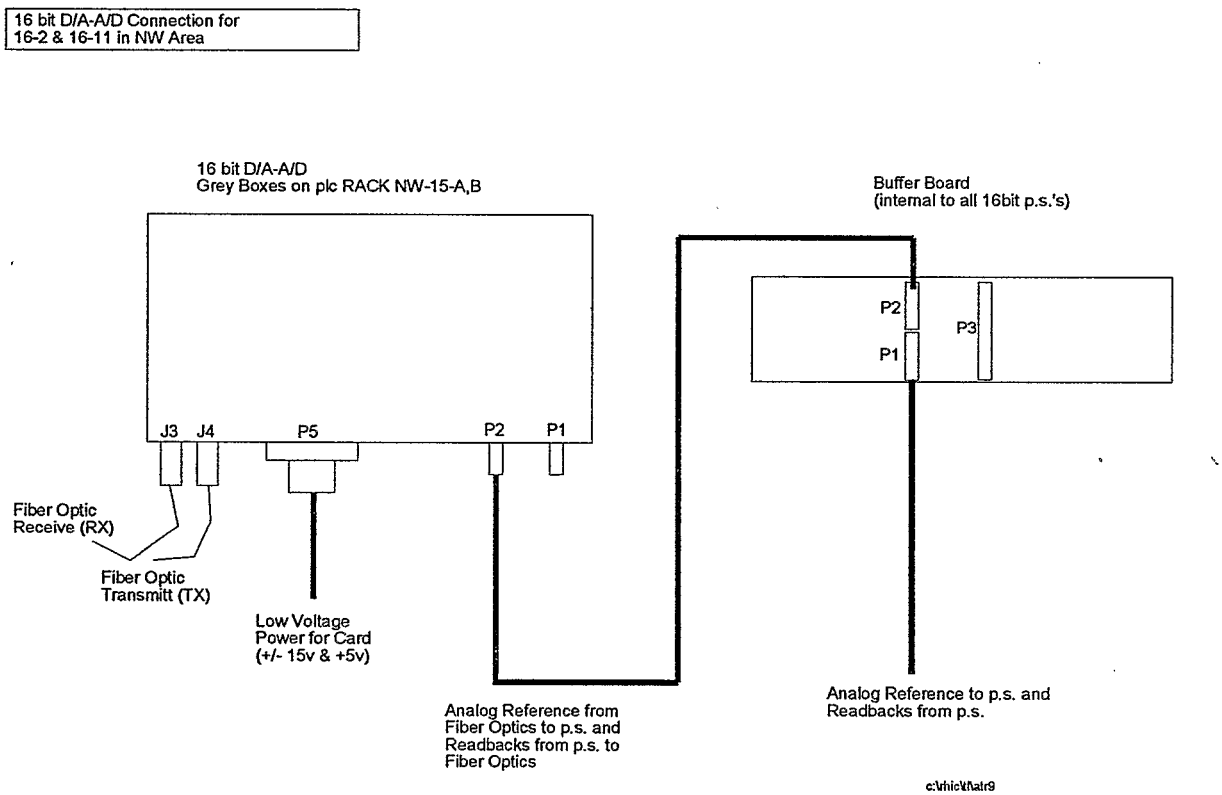

Figure 36

The low precision power supplies do not use a 16 bit interface card. They use a 12 bit DAC. The block diagram in Figure 37 and 38 illustrate the connections between the two. Figure 37 and 38 also show the readbacks to the MADC from the buffer board.

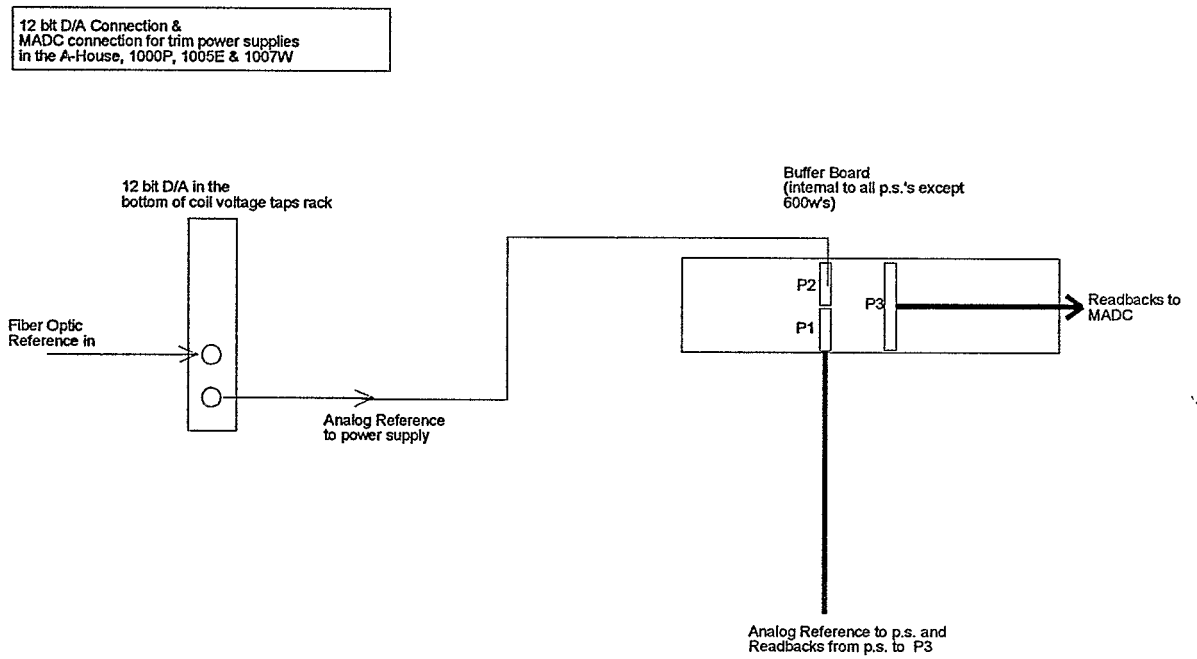

Figure 37

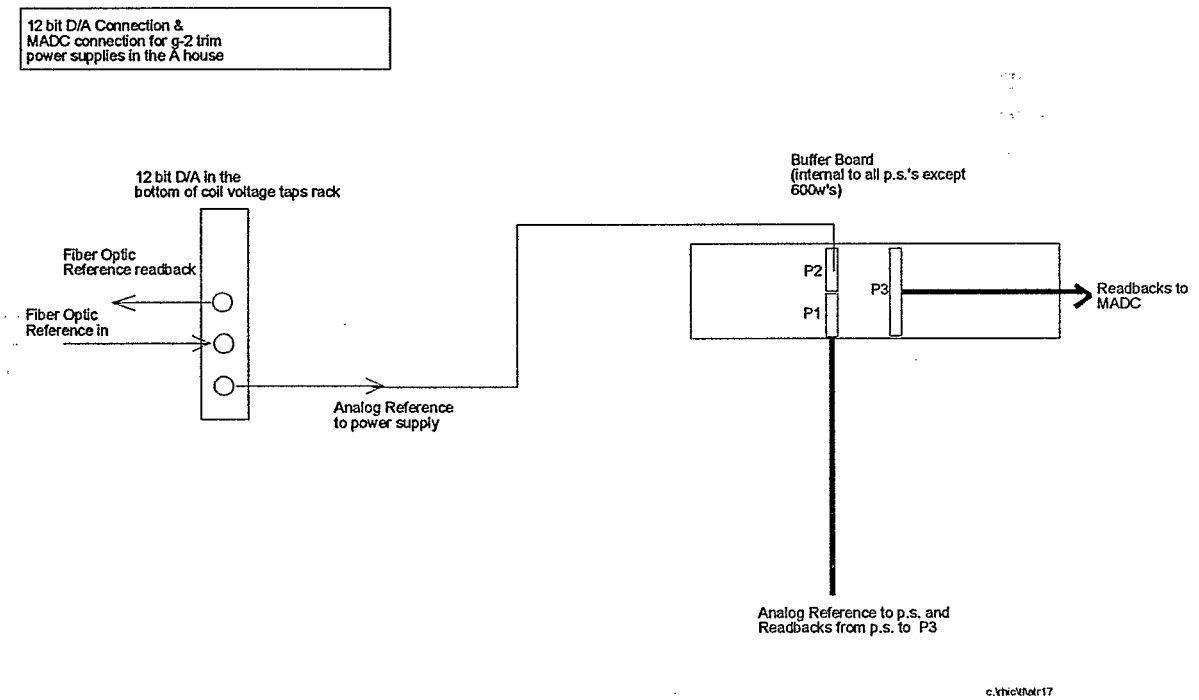
12 bit D/A Connection &
MADC connection for g-2 trim
power supplies in the A house
12 bit D/A in the
bottom of coil voltage taps rack
Buffer Board
(internal to all p.s.'s except
600w's)
Fiber Optic
Reference readback
Fiber Optic
Reference in
P2
P1
P3
Readbacks to
MADC
Analog Reference
to power supply
Analog Reference to p.s. and
Readbacks from p.s. to P3

Figure 38

Section G

Switching Magnet Power Supply Reversing Switch Electronics

Figure 39 is a block diagram of the reversing switch circuitry. The rectifier current sensor is used to detect when the current has gone to zero, this enables the switch. Meaning, if a polarity command to reverse is sent then the switch will switch if the enable bit says it can. The rectifier current sensor and the load current sensor are compared to ensure there are no shorted SCR's. The other 2 faults that can be detected are whether the CMD=the STATUS and if there is more than one polarity status or no polarity status. The relays marked SCR"s 1,2,3,4 feed the DC gates for the individual SCR's. Figure 40 is a schematic of one SCR gate. All four look the same but are all separate for isolation purposes. All of the SCR gates are DC gates.

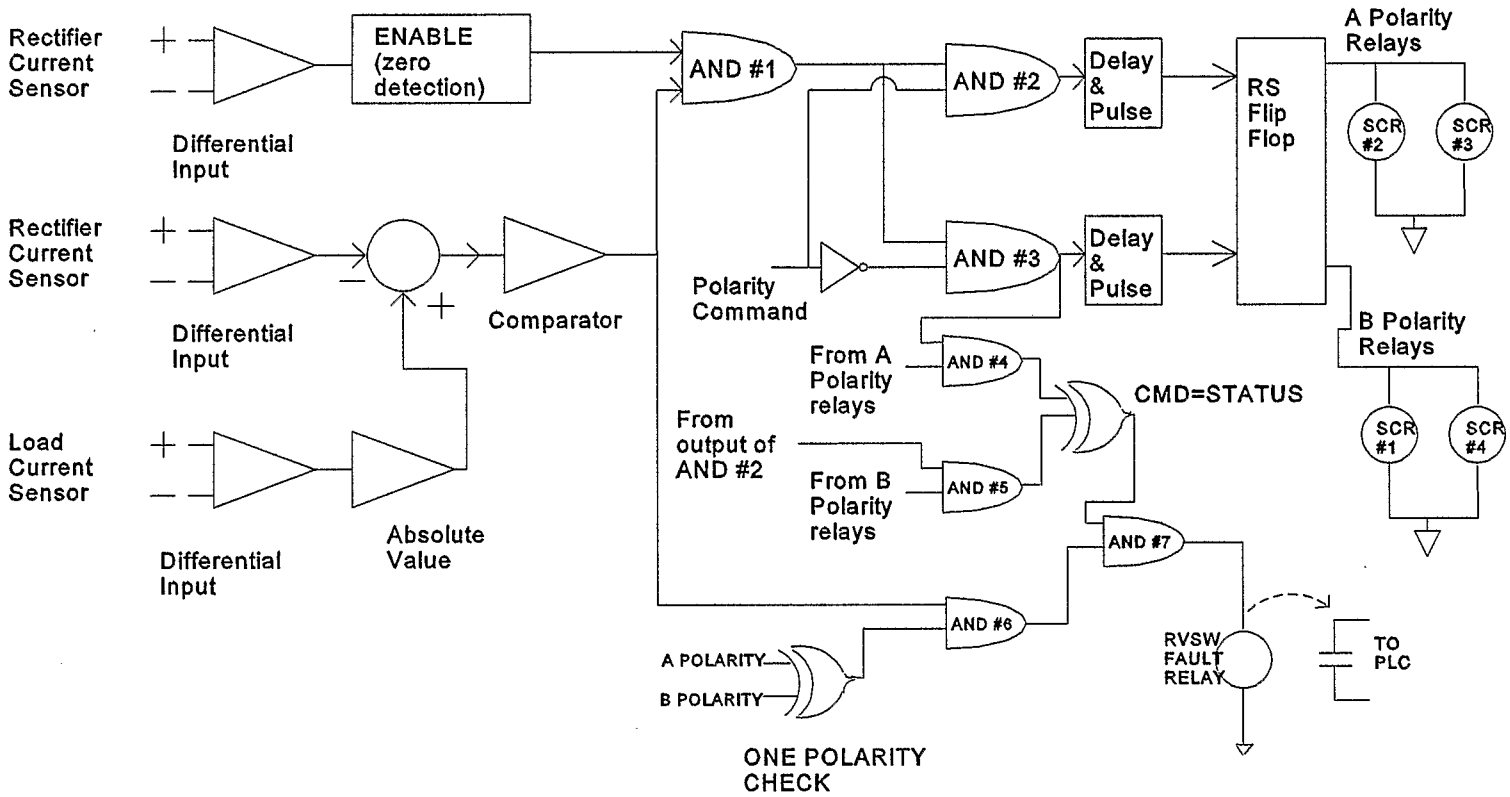

Reversing Switch Faults

1. Command does not equal Status
2. More than one or no polarity CMD
3. Load current sensor does not equal Rectifier current sensor

Figure 39

c:\rhlctl\atr19

DC GATE CIRCUIT

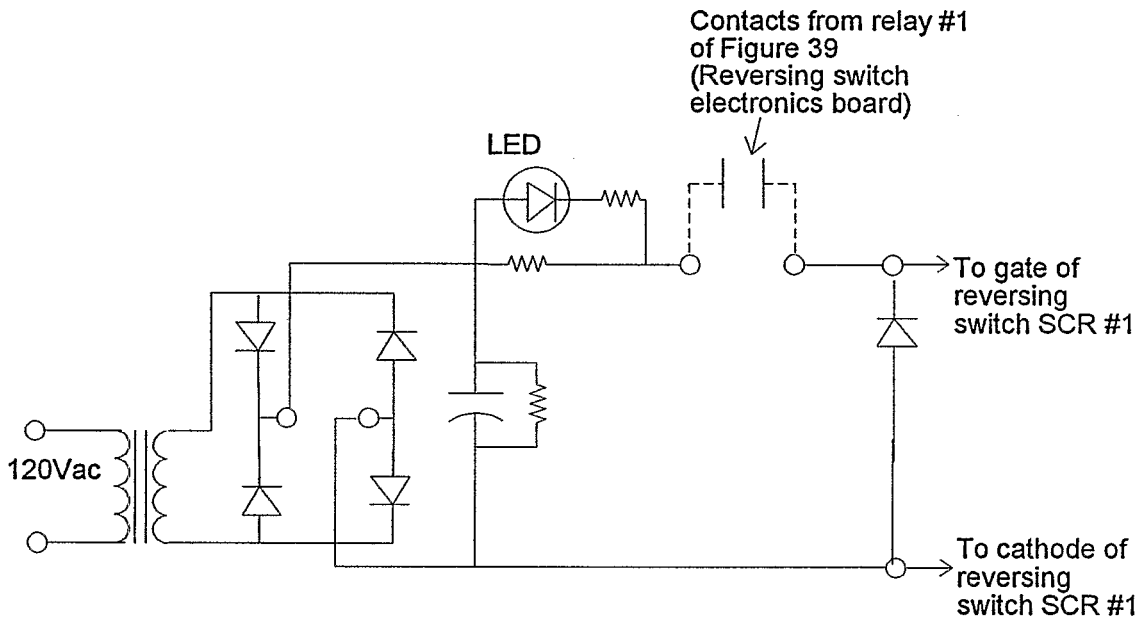

Each SCR in the reversing switch has its own DC gate. Only one is shown here.

Figure 40

Section H:

Magnet Application Program (pagetree) Example

On then next page is an example of the Magnet Application Program used to run the ATR power supplies. The first column contains the NAME of the power supply which also contains the magnet name. The second column is called NEW CURRENT. This is the column you enter the current setting (in Amps) for the power supply whenever you want to change it. The third column, REFERENCE CURRENT, is the actual reference current that is sent out to the power supply from the Wave Form Generator. The fourth column is the MEASURED CURRENT. This MEASURED CURRENT is the actual current that the power supply is running at. This column has a current readback in it only if the power supply has a 16 bit card on it and then feeds the readback back to the Wave Form Generator. If the word "none" appears in the column then it means that this power supply does not have a 16bit card and is not sending its readbacks to a Wave Form Generator. This power supply is then a trim power supply and sends its readbacks to an MADC (multiplex analog to digital converter). The fifth column is the MADC MEASURED CURRENT. Both the high precision and low precision power supplies send their current readbacks to the MADC and this is read in the fifth column. The sixth column is the MADC SIGMA CURRENT or a calculated error between the current readbacks of the fourth and fifth columns. In the sixth column (STATUS) you enter the command (**off**, **standby** or **on**) in lowercase letters and when the power supply has reached that state the word typed in lowercase letters returns with the same word where the first letter is a capital and that is the actual status of the power supply.

To send a new current to just one power supply, that was in the OFF state, you would bring the power supply to the ON state and then set the NEW CURRENT column to the current you want. To send the current to just that one power supply you would go to the STATUS column and type a lower case "d" and hit return. The third and fourth or fifth columns will update as the current increases to the requested level. To send a current to more than one power supply at the same time you would type in all of the required current settings in the NEW CURRENT column and then hit the word **do it** at the top middle and this will send all of the current settings to all of the power supplies at the same time. The ramp duration can also be at the top left corner of the page where it says **Ramp durat**. This will control how fast the new current reference increases.

magaispi

File Data Init

all trimms are zero
beam is stripped to chage state 79 at the 1st foil

Step-stone	2
Ramp durat	3
Gamma:	12.1465

doit

Name	New curren [Ampere]	erence cur [Ampere]	Measured rent [Ampe	adc Measur rent [Ampe	Madc Sigma rent [Ampe	Status
psutv1	0.000	-0.000	-0.049	0.000	0.000	On
psuth2	36.000	36.000	35.902	0.000	0.000	On
psuq1	1531.835	1531.820	1525.038	0.000	0.000	On
psuq2	1677.940	1677.869	1669.513	0.000	0.000	On
psuarc4	3080.602	3080.563	-3060.115	0.000	0.000	On
psuq3	264.296	264.290	262.970	0.000	0.000	On
psuq4	252.752	252.739	251.938	247.815	0.207	On
psuq5	223.501	223.492	222.336	216.109	0.415	On
psuq6	0.000	0.000	-0.183	-2.399	0.162	On
psuth3	0.000	-0.000	none	-1.806	1.038	On
psutv4	0.000	-0.000	none	-1.421	0.026	On
psuq7	162.215	162.206	161.942	157.266	0.264	On
psuq8	253.914	253.899	253.036	-2.781	0.295	On
psuq9	283.130	283.120	282.471	275.005	0.357	On
psuarc8	2306.000	2305.940		2239.829	3.436	On
psuq10	211.646	211.646	211.182	204.366	0.329	On
psutv5	68.353	68.164	none	71.337	0.723	On
psuq11	269.672	269.662	268.600	264.692	0.283	On
psuth6	-75.000	-75.000	none	77.413	1.069	On
psuq12	211.855	211.843	211.324	206.943	0.381	On
psutv7	22.784	22.656	none	21.446	0.230	On
psuq13	185.665	185.659	185.562	181.015	0.342	On
pswarc20	2890.838	2890.744	2863.460	2690.422	6.759	On
pswp1	383.276	383.267	383.469	375.407	0.119	On
pswth1	0.000	0.000	none	-0.047	0.008	On
pswtv2	-8.465	-8.457	none	-8.725	0.007	On
pswth3	0.000	0.000	none	-0.067	0.008	On
pswq1	202.261	202.255	201.663	197.364	0.148	On
pswq2	322.137	322.123	321.564	314.448	0.136	On
pswth4	-4.147	-4.141	none	-4.258	0.012	On
pswp2	398.313	398.312	397.552	388.712	0.254	On
pswq3	227.497	227.497	227.078	221.610	0.076	On

Step 2 loaded from file /operations/app_store/Magnet/ATR951119.2300
Step 2 loaded from file /operations/app_store/Magnet/ATR951119.2300