BNL-105890-2014-CP

Circular beam scanning power system for isotope production upgrade

R. Lambiase, Z. Altinbas

Presented at the 40th Annual Conference of IEEE Industrial Electronics Society, (IECON 2014)
Dallas, TX
October 29 – November 1, 2014

Collider-Accelerator Department

Brookhaven National Laboratory

U.S. Department of Energy
Office of Science

Notice: This manuscript has been authored by employees of Brookhaven Science Associates, LLC under Contract No. DE-AC02-98CH10886 with the U.S. Department of Energy. The publisher by accepting the manuscript for publication acknowledges that the United States Government retains a non-exclusive, paid-up, irrevocable, world-wide license to publish or reproduce the published form of this manuscript, or allow others to do so, for United States Government purposes.

This preprint is intended for publication in a journal or proceedings. Since changes may be made before publication, it may not be cited or reproduced without the author's permission.

DISCLAIMER

This report was prepared as an account of work sponsored by an agency of the United States Government. Neither the United States Government nor any agency thereof, nor any of their employees, nor any of their contractors, subcontractors, or their employees, makes any warranty, express or implied, or assumes any legal liability or responsibility for the accuracy, completeness, or any third party's use or the results of such use of any information, apparatus, product, or process disclosed, or represents that its use would not infringe privately owned rights. Reference herein to any specific commercial product, process, or service by trade name, trademark, manufacturer, or otherwise, does not necessarily constitute or imply its endorsement, recommendation, or favoring by the United States Government or any agency thereof or its contractors or subcontractors. The views and opinions of authors expressed herein do not necessarily state or reflect those of the United States Government or any agency thereof.

Circular Beam Scanning Power System for Isotope Production Upgrade

Robert Lambiase, Zeynep Altinbas
Collider – Accelerator Department
Brookhaven National Laboratory
Upton, NY USA

***Abstract*—To increase the production of medical isotopes, an upgrade to the Brookhaven Linac Isotope Producer (BLIP) facility is now being designed and constructed. Currently, the ion beam strikes the isotope producing target in a single spot. With this upgrade, the ion beam will be directed to hit the target in circular patterns, distributing the heat of collision over a bigger area on the target.**

The power system to create the circular patterns requires orthogonal dipole magnets with sinusoidal currents which are ninety degrees apart from each other.

This paper describes the design concept for powering the magnets and the control system that produces the correct waveforms despite component variations.

***Index Terms*—Power supplies, resonant circuits.**

I. Introduction

Demand for the two most important isotopes produced at the Brookhaven LINAC Isotope Producer (BLIP) exceeds our capability to produce them. Production is limited by the heating effect where the beam strikes the target.

The upgrade to the BLIP facility is designed to spread the heat over a larger area by depositing the beam in circular patterns rather than at a single point. The circular pattern is produced by the deflection of two dipole magnets. These two magnets are powered by sinusoidal current of equal amplitude, but differing in phase by ninety degrees. The resulting deposition path is formed on the target in the same way a Lissajous pattern is formed on an oscilloscope.

The field produced is monitored by an independent system, which will shut off the beam in case of a fault in the powering system.

This paper will describe both the power and control equipment needed to produce the current waveforms in those two magnets.

II. Design Parameters

A. *Beam Parameters*

The beam is delivered as pulses of 450 µsec duration at a 6.67 Hz rate. The rotational frequency of the circular pattern is approximately 4.9 kHz. As the rotational period is 200 µsec, one pulse is deposited along the circular path 2.25 times. The rotational frequency is asynchronous with the beam delivery frequency so that the beam center location along the circular path will change from pulse to pulse.

There will be two circular patterns, with the large pattern having a diameter three times that of the smaller pattern. The heat will be distributed over the target area by hitting it with three pulses along the larger diameter and one along the smaller. Then the process is repeated.

B. Magnet Parameters

The magnet and the cable have been calculated to have a combined inductance of 67.7 µH. The peak current required to deflect the beam around the larger of the two target circles is 318 Amps.

III. The Resonant Circuit

The rated current of 318 Amps peak into the load inductance produces a voltage of 663 Volts peak at our slightly less than 5 kHz operating frequency of 4.9 kHz. This would require a source apparent power of more than 100 KVA. To minimize this reactive power, a capacitor is added to form a parallel resonant circuit. The value of the capacitor for our system requirements is 15.6 µF.

The resonating capacitor will be implemented as four oil impregnated film capacitors in parallel. These will share the 225 Amp rms current, for an individual current of 56.25 Amps rms each. To make the resonant frequency of the x and y axes as close as possible, the eight capacitors will be measured and sorted into two groups to do an initial compensation for value tolerance. Some trimming may still be useful to provide even closer matching.

The placement of the resonating capacitor was another design consideration. Ideally, the capacitor would be right at the magnet. This would reduce the size of the cables connecting the power amplifier to the load. But the magnet is located in the particle accelerator, which is a radiation environment. Suitable capacitors to operate in the radiation environment are very expensive. For that reason, the resonating capacitor is located outside the accelerator.

Delivering the 225 Amps rms to the magnet requires 4/0 cable. But at our frequency, the AC resistance is about three times that of the DC resistance. This problem is solved using 4/0 litz wire with Polyimide insulation for radiation resistance.

This work was supported by the U.S. Department of Energy under contract DE-AC02-98CH10886.

As a resonant circuit, the power amplifier only needs to supply power to the losses in the circuit. The losses in this circuit due to the cable, magnet windings, core losses, and capacitor losses are equivalent to a resistor of about 40 mΩ in series with the magnet. With the resonant circuit, the power requirements are now down to only 2 KVA in the ideal case of being perfectly at resonance.

The power source selected for this application is capable of producing up to 6 KVA at 5 kHz. To maximize the power transfer, a transformer is used to match the output impedance of the amplifier to the equivalent resistance of the load, taking all losses into account.

IV. Controlling the Frequency

The Q of the resulting circuit is about 50, which is quite high. That means that a relatively small drift in the component values of the magnet inductance or resonating capacitor could result in a large increase in the apparent power required by the power source.

To calculate the effect of a resonance shift, the change in required KVA vs. frequency for the specified magnet current is shown in Figure 1. For a center frequency of 4.9 kHz, a ±1% change in frequency (± 50 Hz.) increases the amplifier requirement from 2 KVA to about 3KVA. In this region, the power factor is about ±0.7. The KVA rating of the power amplifier must be de-rated outside this region. One of the design criteria shown with this result is that while the frequency must be maintained in a narrow band, the measurement of phase to keep on resonance is not very precise.

Resonance will be defined at the output of the power source. The voltage and current at the output of the source will be measured. The phase difference between these two sine waves will be used as a feedback parameter to control the driving frequency. At resonance, the phase angle will be zero, and the direction off resonance will be indicated by phase polarity.

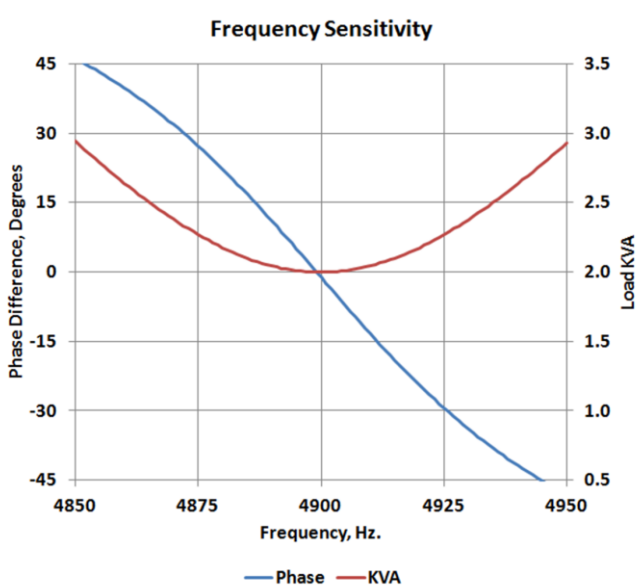

Figure 1. Frequency Sensitivity

The first order effect of drift will be identical for the two axes. The components for each axis are manufactured identically, and exist in the same thermal environment. But, they can drift together. The rotational frequency of the beam is not critical. For that reason, the driving frequency will be adjusted to track any resonance shift of the load.

To account for second order effects, each axis will have its own phase measurement, and the two results will be summed. That way the driving frequency will be between the very close resonances.

Because the effects that would cause the resonance to drift occur very slowly, the bandwidth of the frequency loop will be very low. The optimum bandwidth will be determined experimentally to match the rate of change in the environment, but it is expected to be less than 1 Hz.

V. Controlling the Amplitude

The diameter of the beam patterns will vary in a sequence of three large diameter circles followed by one smaller diameter circle. This will be accomplished by an amplitude feedback loop.

Since the goal of scanning the target is to reduce heating effects, the amplitude accuracy requirement is not very high. This value will be controlled to within 1%.

The bandwidth requirements for the amplitude loop are also not very severe. Beam is delivered in 450 µsec, pulsed at a 6.67 Hz rate, which is 150 msec between pulses. Even with a Q of 50 at 5 kHz, there is plenty of bandwidth to settle to 1% in the 150 msec available to change from one diameter to the other. other.

VI. Overall System View

Figure 2 shows the how all the elements previously described work together.

The VCO provides the sine and cosine frequency references, each with a fixed amplitude of one. These two frequency references then are multiplied by an amplitude reference that sets the value of current in the magnet.

Those set points drive a closed loop system consisting of an amplifier, matching transformer, resonating capacitor, and the magnet. A current transformer in series with the magnet provides the feedback to close the loop.

The phase difference between the voltage and current at the output of each amplifier is measured. These phase angles are summed and the result provides a reference for the VCO.

All of these functions are implemented in the control system which is described next.

VII. Requirements of the Control System

For most accelerator power systems, the controls provide an interface between the power part and the high level operator controls. In the BLIP circular scanning system, the control system is an integral part of the power system. The

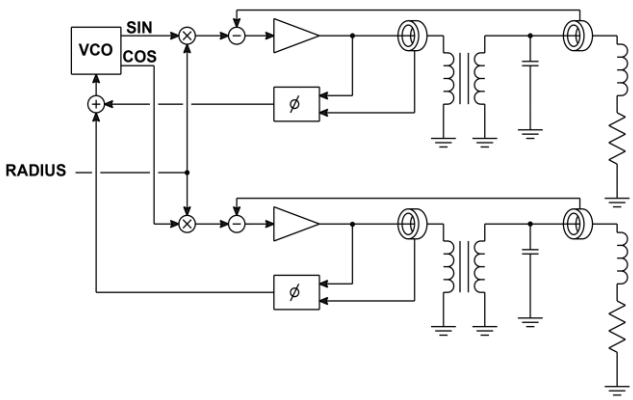

Figure 2. System Block Diagram

requirements of this control system include:

- Data acquisition – In addition to the monitor of the voltage and current at the output of the two power sources, the voltages at the two magnets will be monitored.
- Waveform generation – The quadrature (sine, cosine) waveforms that are inputs to the power source are provided. There is also an option to provide the frequency and amplitude digitally to the power source and use internal oscillators.
- Implementing the frequency loop – This includes two axis phase detection, implementing the PI gains for the loop, and generating fixed amplitude sine and cosine references.
- Implementing the two amplitude loops – Multiplies the amplitude reference levels time the output of the frequency loop as an input to the amplitude feedback loops of the two axes. The control system also implements the loop with its PI gains.
- Generate timing pulses – From the waveforms internally generated, the system can provide timing pulses indicating the position of the beam spot on the target.

In addition to the operational functions listed above, the control system also provides an interface to the machine operators by means of high level controls.

Top level controls will provide a single amplitude reference to determine the radius and the duration at that radius. In return, the power supply control system will provide the magnitude of the current and voltage sine waves for each of the magnets. In addition the magnitude of the current and voltage from each amplifier and the phase shift between current and voltage for each amplifier will be provided. This is an indicator of how close to resonance the rotational frequency is, and the operating KVA of the power source.

VIII. Implementing the Control System

The circular beam scanning power system control will use the National Instruments' PXIe platform for its hardware. The controller will be configured to run two operating systems – Windows 7 and LabVIEW RT – simultaneously. The PXIe platform communicates with the I/O boards over the fast PCIe bus that resides in the backplane of the chassis. A direct communication between two I/O boards can also be established utilizing the same bus.

The control system implementation will be done in LabVIEW. All the computations will be programmed into the Real-Time operating system for the most precision. The I/O boards with appropriate data acquisition rates will be chosen.

The PXIe platform was chosen as the control system because it provides high level flexibility as well as ease of programming due to LabVIEW's graphical interface. The data acquisition hardware options provide variety to accommodate the system's complex requirements.

IX. Additional System Monitoring

Because it is so important not to heat the target beyond its capability, the operation of this scanning system will be monitored by two independent Xilinx Zynq programmable SoC based systems for machine protection.

Inside the magnet, there will be two sets of monitoring coils in each axis. The voltages generated by these coils will be indicators of the field within the magnets, and compared to expected values.

In each place where the powering system has a current or voltage monitoring sensor, two additional independent sensors will be provided to the machine protection system. It will use this data to insure the amplitude and phase characteristics of the powering system are within acceptable limits.