BNL-108602-2015-JA

Novel techniques and devices for in-situ film coatings of long, small diameter tubes or elliptical and other surface contours

A. Hershcovitch[1], M. Blaskiewicz[1], J. M. Brennan[1], W. Fischer[1], C. J. Liaw[1], W. Meng[1], R. Todd[1], A. Custer[2], A. Dingus[2], M. Erikson[2], N. Jamshidi[2], H. J. Poole[2]

[1]Brookhaven National Laboratory, Upton, NY 11967 USA
[2]PVI, Oxnard, CA 93031 USA

Submitted to Journal of Vacuum Science and Technology B

September 2015

Collider-Accelerator Department

Brookhaven National Laboratory

U.S. Department of Energy
Office of Science, Office of Nuclear Physics

Notice: This manuscript has been co-authored by employees of Brookhaven Science Associates, LLC under Contract No. DE-SC0012704 with the U.S. Department of Energy. The publisher by accepting the manuscript for publication acknowledges that the United States Government retains a non-exclusive, paid-up, irrevocable, world-wide license to publish or reproduce the published form of this manuscript, or allow others to do so, for United States Government purposes.

DISCLAIMER

This report was prepared as an account of work sponsored by an agency of the United States Government. Neither the United States Government nor any agency thereof, nor any of their employees, nor any of their contractors, subcontractors, or their employees, makes any warranty, express or implied, or assumes any legal liability or responsibility for the accuracy, completeness, or any third party's use or the results of such use of any information, apparatus, product, or process disclosed, or represents that its use would not infringe privately owned rights. Reference herein to any specific commercial product, process, or service by trade name, trademark, manufacturer, or otherwise, does not necessarily constitute or imply its endorsement, recommendation, or favoring by the United States Government or any agency thereof or its contractors or subcontractors. The views and opinions of authors expressed herein do not necessarily state or reflect those of the United States Government or any agency thereof.

Novel techniques and devices for *in-situ* film coatings of long, small diameter tubes or elliptical and other surface contours

A. Hershcovitch[a)b)], M. Blaskiewicz, J.M. Brennan, W. Fischer, C-J Liaw, W. Meng, and R. Todd
Brookhaven National Laboratory, Upton, New York 11973, U.S.A

A. Custer, A. Dingus, M. Erickson, N. Jamshidi, H. J. Poole
PVI, Oxnard, California 93031, USA

[a)]American Vacuum Society member

[b)]Electronic mail: hershcovitch@bnl.gov

Devices and techniques that can, via PVD, coat various surface contours or very long small aperture pipes, are described. Recently, a magnetron mole was developed in order to in-situ coat accelerator tube sections of the Brookhaven National Lab relativistic heavy ion collider that have 7.1 cm diameter with access points that are 500 meters apart, for copper coat the accelerator vacuum tube in order to alleviate the problems of unacceptable ohmic heating and of electron clouds. A magnetron with a 50 cm long cathode was designed fabricated and successfully operated to copper coat a whole assembly containing a full-size, stainless steel, cold bore, of the accelerator magnet tubing connected to two types bellows, to which two additional pipes made of accelerator tubing were connected. The magnetron is mounted on a carriage with spring loaded wheels that successfully crossed bellows and adjusted for variations in vacuum tube diameter, while keeping the magnetron centered. Electrical power and cooling water were fed through a cable bundle. The umbilical cabling system, which is enclosed in a flexible braided metal sleeve, is driven by a motorized spool. To increase cathode lifetime, movable magnet package was developed, and thickest possible cathode was made, with a

rather challenging target to substrate distance of less than 1.5 cm. Optimized process to ensure excellent adhesion was developed. Coating thickness of 10 μm Cu passed all industrial tests and even exceeded maximum capability of a 12 kg pull test fixture. Room temperature RF resistivity measurement indicated that 10 μm Cu coated stainless steel accelerator tube has conductivity close to copper tubing. Work is in progress to repeat the RF resistivity measurement at cryogenic temperatures. Over twenty years ago, a device using multi-axis robotic manipulators controlling separate robotic assemblies resulted in 9-axes of motion combined with conformal shape of the cathodes that can adapt to various curved surface contours was developed and successfully used for depositing optical coating on aircraft canopies. The techniques can be utilized for *in situ* coating of elliptical and other surface contour RF cavities and long beam pipes with thick superconducting films. Plans are to incorporate ion assisted deposition in those techniques for attaining dense, adherent and defect free coatings.

I. INTRODUCTION

Although various coating techniques have been employed for many years, certain applications involve geometries that pose rather difficult challenges. In this communication, three applications, for which a number of challenging coating techniques via physical vapor deposition (PVD) were developed, are described. The applications are for in-situ copper coating very long narrow tubes, optical coating of aircraft canopies, and superconducting coating RF cavities.

High wall resistivity in accelerators can result in unacceptable levels of resistive heating or in resistive wall induced beam instabilities[1]. This is a concern for the Relativistic Heavy Ion Collider (RHIC) machine, as its vacuum chamber in the cold arcs

is made from relatively high resistivity 316LN stainless steel. This effect can be greatly reduced by coating the accelerator vacuum chamber with oxygen-free high conductivity copper (OFHC), which has conductivity that is three orders[2,3] of magnitude larger than 316LN stainless steel at 4 K. But, any coating has to prevent electron cloud formation that has been observed in many accelerators, including RHIC[4-6], which can act to limit machine performance through dynamical beam instabilities and/or associated vacuum pressure degradation.

Formation of electron clouds is a result of electrons bouncing back and forth between surfaces, with acceleration through the beam, which can cause emission of secondary electrons resulting in electron multipacting. Accelerator vacuum chambers and beam pipe surfaces with high enough secondary electron yield (SEY), whose typically maximum value SEY max > 1.3, facilitate electron multiplication. Original plans were to add a second coating layer on top of OFHC of TiN or amorphous carbon (a-C) to reduce secondary electron yields[7,8]; but, later results[9] indicated that a-C has lower SEY max than TiN in coated accelerator tubing. Nevertheless, new experimental SEY measurements indicated that there was no need to pursue a-C coating either; since well-scrubbed bare copper can have its SEY max reduced[10] close to 1 (SEY max < 1.3 is needed to eliminate electron cloud problems). In essence copper coating can resolve the resistivity issue, and after scrubbing can reduce SEY max below 1.3, i.e. detrimental effect of electron clouds can be marginalized.

Applying such coatings to an already constructed machine like RHIC without dismantling it is rather challenging task due to the small diameter bore (of 7.1 cm) with access points that are about 500 m apart. A device and technique, which were developed

for *in-situ* coating of the RHIC cold bore vacuum tubes, are described in this paper. Experiments proved that the device and technique could successfully be utilized to coat the RHIC cold bore vacuum tubes. But before embarking on the large task of coating RHIC, additional studies are needed to ensure that the expected benefits of coating the RHIC cold bore vacuum tubes with 10 μm of copper are realized. In the non-cryogenic (warm) sections, of most accelerators including RHIC, where high resistivity is not an issue, the electron cloud problem was solved by using non evaporable getters[11] (NEG).

Airplane canopies, usually made of acrylic, require coating for multiple reasons among them are to allow for electron current flow for canopies not to charge-up; facilitate electron current flow to prevent icing, protect the pilot from laser beams and reflect certain wavelength radiation. Additionally, any deposition on a canopy must be optical coating for maximum visibility. Basically any aircraft canopy coating must be transparent and electrically conducting.

Presently all operational superconducting radio frequency (SRF) cavities and electron guns are made of solid niobium. However, niobium is very expensive and has poor mechanical properties leading to low required design pressures. Consequently, there have been efforts to develop superconducting films for these applications in order to lower manufacturing costs and to provide mechanically stronger cavities. The above techniques can be utilized for coating of elliptical and other surface contour RF cavities with thick superconducting films. Plans are to incorporate ion assisted deposition in those techniques for attaining defect free coatings.

II. DEPOSITION PROCESSES AND OPTIONS

Exploration of coating techniques was done before selecting an approach for RHIC coating. Coating methods can be divided into two major categories: chemical vapor deposition (CVD) and physical vapor deposition (PVD). Reference 12 contains a comprehensive description of the various deposition processes; unless otherwise noted, information contained in the next two sections is referenced to Ref. 12.

Due to the nature of the RHIC configuration, only PVD is viable for in-situ coating of the RHIC vacuum pipes. First, the temperature under which coating can be made cannot be high (400° C is required for some conventional CVD), since the RHIC vacuum tubes are in contact with superconducting magnets, which would be damaged at these temperatures. A second very severe constraint is the long distance between access points. Vapor injected from access points, which are 500 m apart, into tubes with 7.1 cm ID, would likely not propagate far and result in extremely non-uniform coating. But these constraints also severely restrict PVD options. Additionally, there is extremely poor pumping in the 500 m section, which precludes many PVD techniques. Obviously evaporation techniques like ovens cannot be used in 7.1 centimeters ID, 500-meter long tubes, as well as, a wide variety of vapor generation techniques ranging from high temperature evaporation to sputter bombardment by electron beams, lasers, ion beams and plasma, which are precluded by the geometry. During sputtering ambient metal vapor pressure rises, which causes Voltage breakdowns in particle beam generating guns, as well as severely attenuating and even worse reflecting laser beams. Therefore, evaporation must be accomplished locally using a system whose driver is unaffected by higher pressures.

Canopy curvature required development of a device that resulted in 9-axes of motion, which was combined with conformal magnetron cathodes, to successfully optically coat aircraft canopies twenty years ago. This paper is the first publication of that device.

Coating aircraft canopies was performed primarily as PVD; but, reactive gases were used as well. The conformal magnetrons had metallic cathodes operating in a gas mixture, into which reactive proprietary gases were injected at the process end. These coatings, which are highly proprietary, were basically indium tin oxide (ITO) or variants of. Given the positive experience with RHIC coating R&D and with canopy coating, the choice of magnetrons for coating RF cavities is obvious.

III. MAGNETRON DEPOSITION STATE-OF-THE-ART

Of the plasma deposition devices like magnetrons, diodes, triodes, cathodic arcs, etc., magnetrons are the most commonly used plasma deposition devices. Major advantages of magnetron sputtering sources are that they are versatile, long-lived, high-rate, large-area, low-temperature vaporization sources that operate at relatively low gas pressure and offer reasonably high sputtering rates as compared to most other sputtering sources. Because of these superior characteristics magnetron sputtering is the most widely used PVD coating technique. Although arc discharges operate with higher intensity, they require the use of special filters[13] to eliminate macroparticles that reduce the net deposition rate to those of magnetrons.

Typical coating rates by magnetrons (w/argon gas) are 5 nm/sec for a power level of about 10 W/cm^2 on the magnetron cathode, though with intense cooling a cathode power of more than 20 W/cm^2 is achievable.

Since the RHIC geometry is very conducive to cylindrical magnetrons due to the length to radius ratio of the RHIC beam pipe, the choice of a long cylindrical magnetron, similar to that described by A.S. Penfold in reference 12. Ideally, that cylindrical magnetron should be made as long as possible in order to coat sections as long as possible while minimizing or eliminating any need for cathode replacements. The RHIC cold section has varying curvature (with an overall curvature of approximately 1.8 mrad per meter), which does not limit magnetron length. But, mechanical constraint to prevent any sagging does limit the magnetron cathode length to 50 cm.

For coating aircraft canopies conformal magnetrons, which are essentially planar magnetrons with curved geometry, were utilized. Similarly comparable conformal magnetrons are suitable for RF cavities due to curvatures in their geometries. Many RF cavities comprise of elliptical and other surface contours.

IV. THE DEPOSITION TECHNIQUES

Next, deposition systems, which were fabricated and were successfully operated to produce the desired coatings, are described. Basically these are PVD deposition of thin-coatings inside of difficult to access tight or curved geometries. Figure 1 shows a section of a RHIC cold bore arc. As it can be seen from figure 1a, which show a cross section of the RHIC containment shell, the 7.1 cm diameter beam is surrounded by a large iron yoke, which excludes the possibility of applying external magnetic fields to the magnetron. While the RHIC curvature does not limit magnetron length, the cabling system requires guides roughly every 7 meters to prevent cables from scraping against the beam pipe. These guides are discussed at end of the next second level heading.

a)

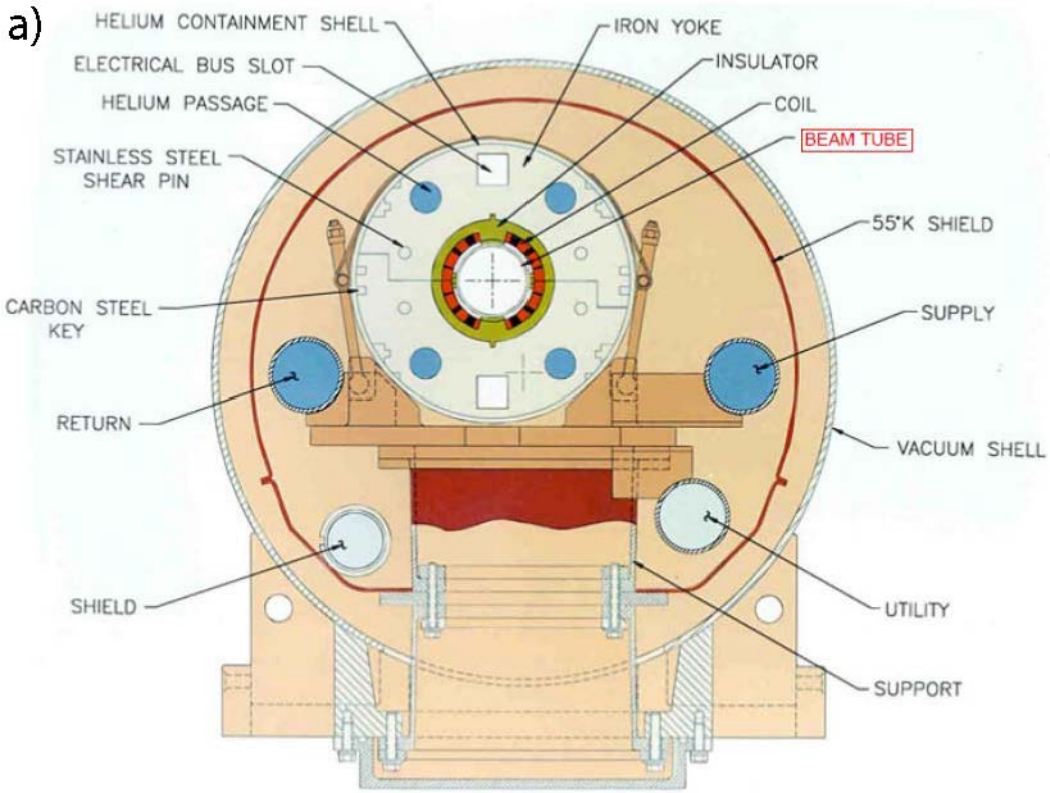
HELIUM CONTAINMENT SHELL
IRON YOKE
ELECTRICAL BUS SLOT
INSULATOR
HELIUM PASSAGE
COIL
BEAM TUBE
STAINLESS STEEL SHEAR PIN
55°K SHIELD
CARBON STEEL KEY
SUPPLY
RETURN
VACUUM SHELL
SHIELD
UTILITY
SUPPORT

b)

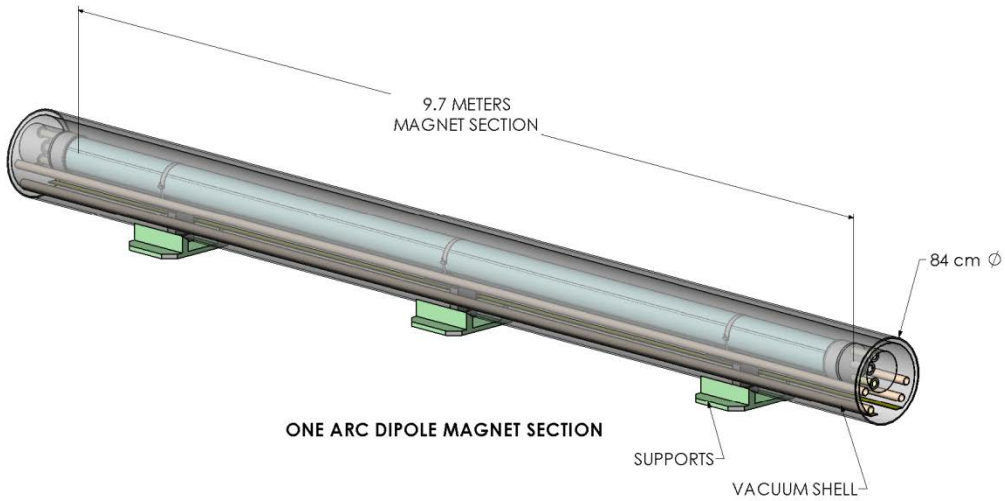
9.7 METERS
MAGNET SECTION
84 cm ∅
ONE ARC DIPOLE MAGNET SECTION
SUPPORTS
VACUUM SHELL

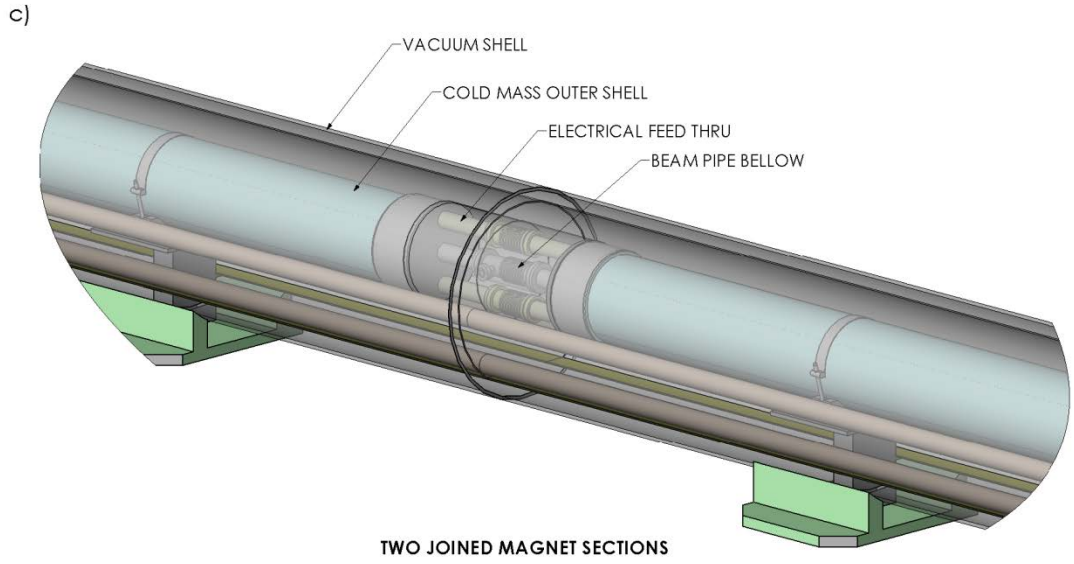

Figure 1: (Color Online) RHIC magnets: (a) Cross section of a superconducting RHIC magnet containment shell, showing the magnet yoke, helium cooling pipes, etc. (b) a 9.7 meter long dipole magnet; its outer containment shell is 84 cm diameter. The inner containment shell, which is at liquid helium temperature and encloses the iron yoke, is 34 cm in diameter. (c) Drawing showing connections between magnets; beam pipe and conduits are connected through bellows.

A. RHIC Magnetron Deposition Mole

Originally, for RHIC, the objective was to develop a plasma deposition device for in-situ coating of long, small diameter tubes with about 5 - 10 μm of Cu following by a coating of about 0.1 μm of a-C. But, recent results[10, 14-17] indicated that clean, conditioned copper coating had sufficiently low SEY max, i.e. no additional coating is needed. The magnetron design underwent a number of iterations. First a mobile magnetron with a 15 cm long cathode was designed, fabricated, and tested to coat various samples of RHIC cold bore tubes with up to 10 μm with OFHC at an initial low coating rate of 3 nm/sec

(copper deposition rates were measured with a 6 MHz crystal rate monitor, which was calibrated by deposition periods and profilometry measurements). Internal ring permanent magnets form the magnetic field; magnetron design is based to what's described in a reference 11 chapter written by J.A. Thornton and A.S. Penfold pp. 76-110. The magnetron assembly was mounted on a carriage (mole) pulled by a cable assembly driven by an external motor. The cable bundle, which is enclosed in 1 inch diameter stranded SS (or braided copper), contains electric power and water cooling feeds, as well as some instrumentation wires. Umbilical spool chamber and the cable assembly are under vacuum. Other aspects including the dragline have been described elsewhere[14-17].

Next a magnetron with a 50 cm long copper cathode was designed fabricated (cooling and weight limits the length), and successfully operated to coat an assembly containing a tube of a full-size, stainless steel, cold bore, RHIC magnet tubing connected to two types of RHIC bellows, to which two additional pipes made of RHIC tubing were connected. To increase the cathode lifetime, a movable magnet package is used, and the thickest possible cathode was made, with a target to substrate distance of less than 1.5 cm. It was rather challenging, when compared to commercial coating equipment, where the target to substrate distance is 10's of cm; 6.3 cm is the lowest experimental target to substrate distance found in the literature. Additionally, the magnetron developed during this project provides unique omni-directional uniform coating.

The magnetron has a 50 cm long copper cathode, which is shown in figure 2. The magnetron is mounted on a carriage with spring loaded wheels that successfully crossed bellows and adjusted for variations in vacuum tube diameter, while keeping the

magnetron centered. The carriage can also be seen in figure 2. Some deposition experiments were performed with spring loaded wheels on both sides of the magnetron, such that a set of wheels rolls over coated areas. No indentation in or damage to coating was observed, i.e. a train like assembly option for coating 500 meter RHIC sections without any interruptions is viable.

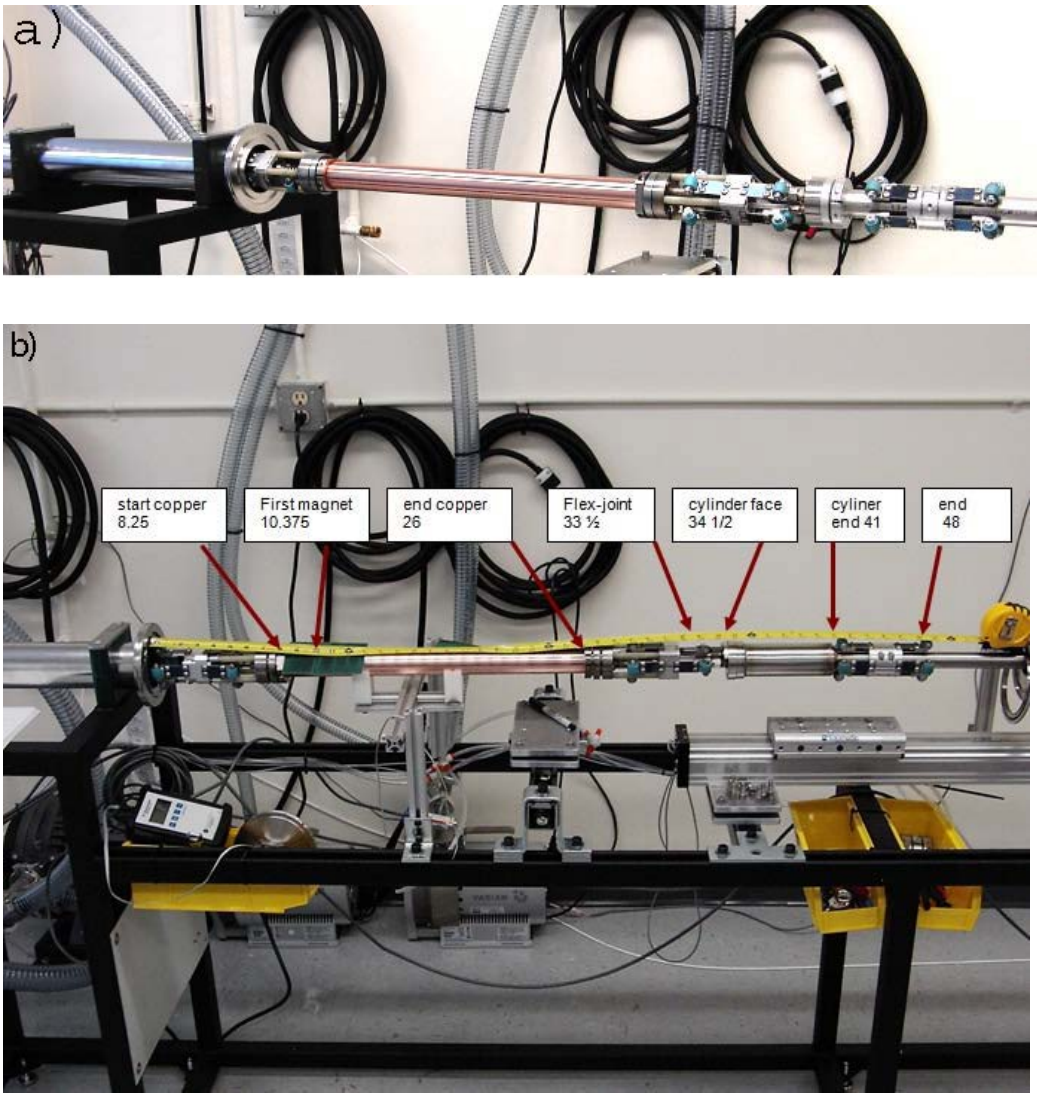

Figure 2: (Color Online) Photos of the magnetron assembly: (a) 50-cm long cathode magnetron and spring loaded guide wheels. Leading edge guide wheels are inserted in a full-size RHIC tubing section. Photo (b) showing the whole magnetron and additional

drive assembly; the cylinder on the right after the flex-joint is motorized. The numbers represent distance in inches from the first wheels on the left.

Figures 3a and 3b are drawings showing details of the external and internal magnetron structure. Magnetron magnetic field is generated by ring permanent magnets separated by spacers. Magnets and spacers are held together by a center rod to form a magnet package. Water cooling is provided internally. Not shown are cables moving the magnetron assembly with its electrical power and cooling water that are fed through a cable bundle, which are enclosed in a flexible braided metal sleeve. Strong internal ring permanent magnets and movable magnet package are employed. Two types of mechanisms, shown in figure 3, for moving the magnet package a magnet and spacer pitch back and forth were tried in order to maximize the copper utilization (having stationary magnets resulted in deep groves, due to fast erosion at magnetic fields maximum, which require frequent cathode replacements).

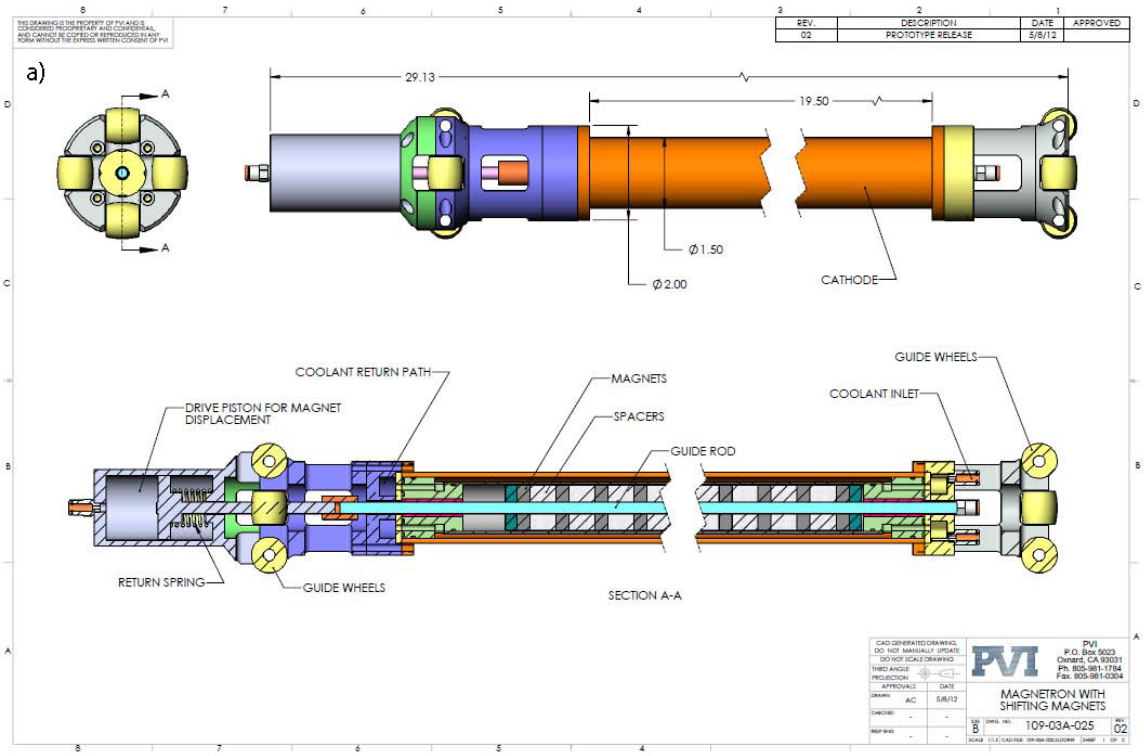

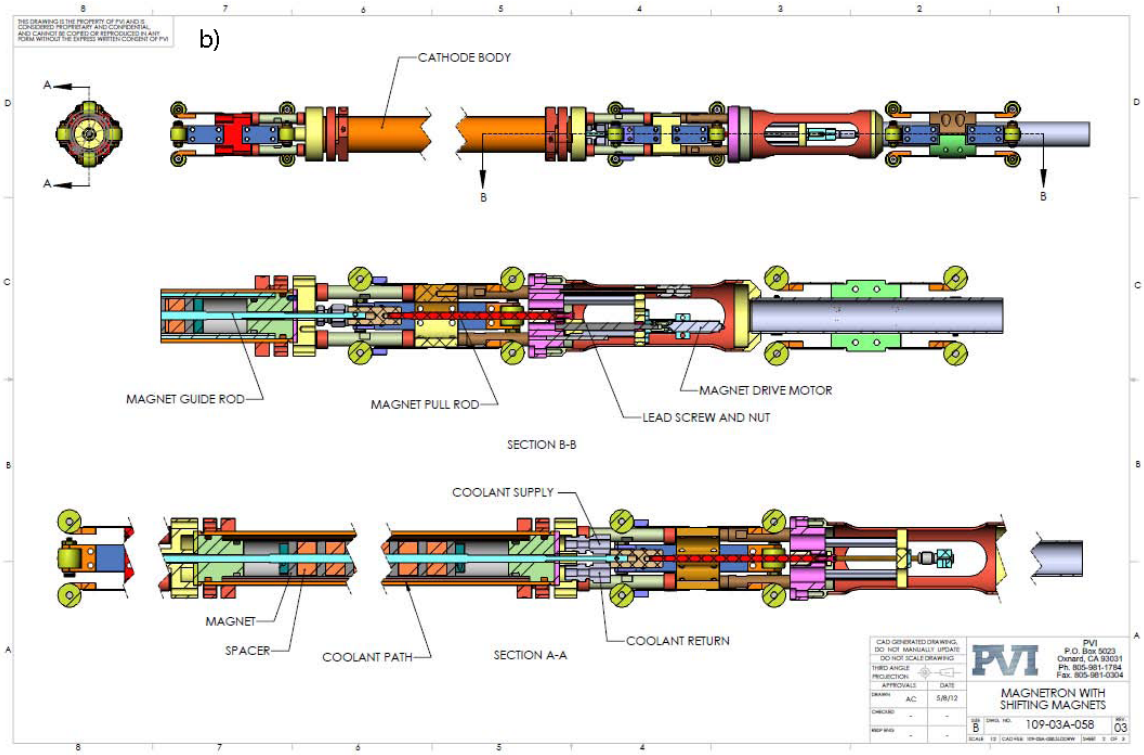

Figure3: (Color Online) Drawings showing two types of mechanisms for moving the 50-cm long cathode magnetron magnet package hydraulic (a) and magnet drive motor motion (b).

One mechanism is based on hydraulics, utilizing the magnetron cooling water. In the second option tried, magnet drive motor motion moves the magnet package (both are proprietary).

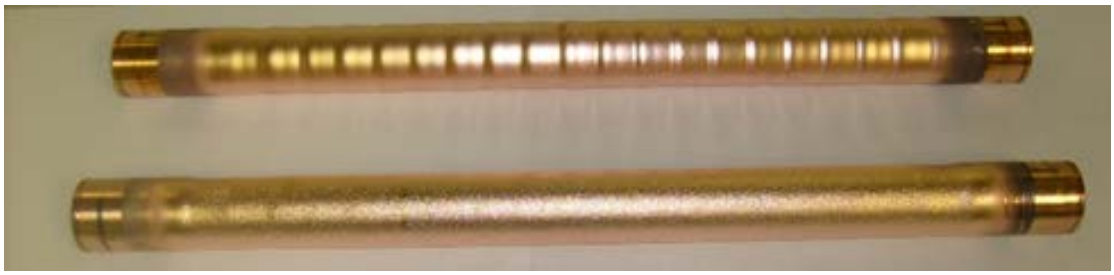

Figure 4: (Color Online) Erosion of 50-cm copper cathodes: hydraulic driven mechanism (top) and magnet drive motor motion (bottom).

It is obvious from the figure 4 erosion results that moving the magnet package via the small magnet drive motion results in more uniform erosion, and hence, better copper utilization.

Prior to utilizing moving magnet package, copper utilization was 12.5% due to deep grooves forming at points of high magnetic field; once the copper thickness at such a deep erosion is reduced to 0.030” (from 0.2”), sputtering needs to be stopped to prevent structural compromise. In the magnetron with the motor driven moving magnet package, copper utilization reached a remarkable 85%.

Cables moving the magnetron assembly with its electrical power and cooling water are fed through a cable bundle. An umbilical cabling system, which is enclosed in a flexible braided metal sleeve, is driven by a motorized spool, shown in figure 5. The whole magnetron and umbilical cabling systems are in vacuum.

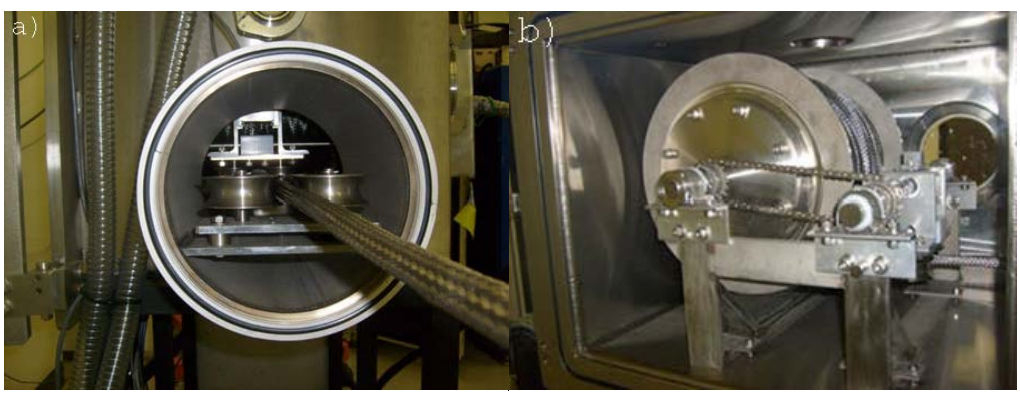

Figure 5: (Color Online) Photos of the umbilical system that feed into the tube bellow assembly (a) and the cable bundle drive and spool (b).

Scaling the umbilical motorized spool drive system to a 500 m cable bundle yields a system that is 3 meters or less in any dimension (plenty room in the RHIC tunnel). Pull cable will be ¼” diameter stranded SS, is typically used in aircraft for flexible linkage with the various airfoil surfaces; very strong (20K tensile) with low elongation. Before starting the coating process in RHIC, the pull cable is attached to a

small motorized carriage, which pulls the cable bundle through the beam pipe until the end opposite to the spool is reached. The magnetron is then attached to the cable bundle to start the coating process.

Due to the beam pipe length and curvature, guides shown in figure 6 are needed to prevent the cable bundle from dragging or scraping against the beam pipe or bellows, even though the cable bundle is always on the uncoated side of the beam pipe. Therefore between the chamber housing the spool and the beam pipe, an additional, guide chamber to mount the guides as the cable bundle is inserted into the beam pipe and to dismount the guides during the deposition process as the cable bundle is to be placed. Each guide is a spring loaded clam shell, having a clamping spring, with flexible guide wheel arms as shown in figure 6. Guide loading (and unloading) is to be performed by three actuators: to bring the guide, place the guide on the cable bundle (conduit), and clamp it; dismounting is performed in the opposite order.

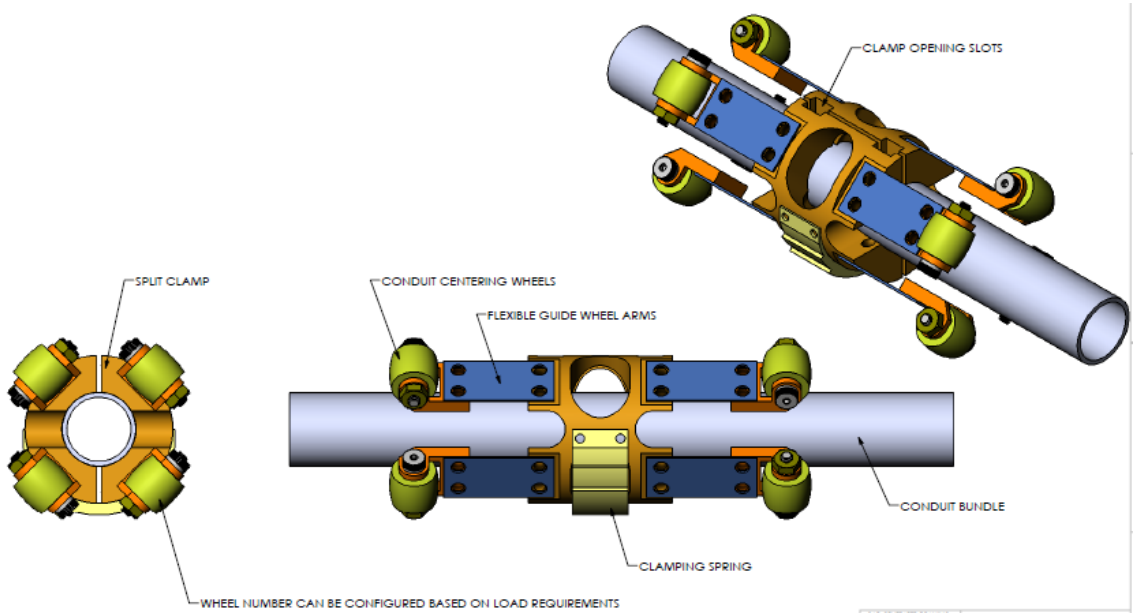

Figure 6: (Color Online) drawings of the guides with flexible wheel arms and clamps to enable mounting when the cable bundle (conduit) is pulled into the beam pipe and dismounting as the cable bundle is coiled on the spool.

At this point in time, an assembly of a RHIC magnet tube sandwiched between two types of RHIC bellows including a shielded bellow with additional sections of RHIC tubing were connected to each bellow for a total length of about 25 meters was successfully copper coated. For this assembly there was no need for guides, since the bellows and additional sections (of quadruples) are straight.

B. Aircraft Canopy Coating Apparatus

For coating aircraft canopies, indium tin oxide (**ITO** or **tin-doped indium oxide**) is a solid solution of indium oxide (In_2O_3) and tin oxide (SnO_2), typically 90% In_2O_3, 10% SnO_2 by weight. It is transparent and colorless in thin layers. Indium tin oxide is one of the most widely used transparent conducting oxide because of its two chief properties, its electrical conductivity and optical transparency, as well as the ease with which it can be deposited as a thin film. As with all transparent conducting films, a compromise must be made between conductivity and transparency, since increasing the thickness and increasing the concentration of charge carriers will increase the material's conductivity, but decrease its transparency.

Thin films of indium tin oxide are most commonly deposited on surfaces by physical vapor deposition. PVI designed and built robotic PVD coating systems for aircraft canopies; the first system was installed and became operational in 1990.

The robotic coating systems were based on using PVI’s proprietary design of conformal shaped planar magnetron cathodes. The cathodes were designed to be single piece units that had a shape that would best match the profile of the Polycarbonate

aircraft canopies. The cathodes were designed for reactive sputtering of ITO using Indium metal targets that had been bent to the required shape and bonded to water-cooled Cu backing plates. Each sputtering source was mounted to a 3-axis robotic manipulator so the cathode could be positioned to maintain a consistent sputtering distance during the sputtering process. The two cathodes were mounted onto a robotic trolley assembly that was installed on a pair of rails mounted to the inside of the vacuum chamber. Each cathode could be articulated with 3 degrees of freedom (roll, pitch & yaw) and the trolley would traverse back and forth down the length of the chamber.

The aircraft canopy was suspended upside down by a separate robotic assembly that could articulate the canopy vertically. The 90-inch travel combined with the conformal shape of the cathodes allowed the aircraft canopies to be sputtered with ITO and to meet the required coating uniformity requirements. In addition to the conformal cathodes, PVI designed and implemented conformal etching electrodes that could be used to clean and activate the surface of the Polycarbonate substrate prior to deposition, and a conformal IR heating array that could be positioned inside of the aircraft canopy to assist with substrate degassing and improve film adhesion.

The combined, 9 axis motion controls of the robotic canopy coating system allowed the user to easily program the flight path of the cathodes so that various shapes of canopies could be coated. Dual encoders on each drive axis ensured position control would be maintained in the event of an electrical problem. In the event of a shut down due to power or interlock violation issues, the system was programmed to go to a “safe” position and allow the operator to determine if the coating run could continue based on the data acquired during the run, up to the point of shut down.

For the ITO film deposition, cathodes were made from indium tin alloy and sputtered in Ar-O_2 gas mixture. Near process end, additional proprietary/classified gases were injected to finalize the film deposition.

Due to the lack of availability of "off-the-shelf" components that were high vacuum compatible in the early 1990's, when these systems were fabricated, PVI had to modify available specialty components (i.e. DC servo motors, gear boxes, sensors…etc.) and design and build most of the mechanical robotic components that were to be used in a high vacuum environment.

V. RHIC MAGNETRON OPERATING PARAMETERS

In contrast to many areas in fusion research, where currents are the controlled parameters in most plasmas while voltages vary, industry typically operate discharges used in sputtering for deposition or in ion sources for implantation with a constant voltage. The main tokamak discharge parameter usually reported is the current. The first author of this communication has been involved in plasma windows[18], hollow cathode arcs for various applications, and ion sources[19] for fusion R&D, where arc currents of plasma discharges are set parameters. In those applications, plasma densities and temperatures are the parameters being optimized.

Plasmas in many industrial applications, like deposition and ion implantation, are optimized to control the sputtering particle energies and angles first, and then adjusted for regulating fragmentation and ionization. However, in this case, unlike other industrial deposition applications, there were constraints, which required that constant power be utilized during copper coating deposition. First of all, deposition power had to be limited to prevent overheating of beam pipe, to avert potential damage to superconducting magnets, which surround the beam pipe (even though hot substrate yield good deposition

results). Second, cathode substrate gap is unusually small, which caused (experimentally) discharge extinguish during constant voltage operation. Third, sputtering rate is generally more constant with power control.

To obtain various coating genres, different magnetron operating modes were experimented with for finding the deposition mode yielding the best adhesion, highest conductivity, and lowest SEY. An important parameter determining the magnetron operating mode is the gas pressure, which plays a similar role in many areas of fusion, hollow cathode arcs and other related research areas, as well as many industrial applications, like ion implantation.

The working gas was argon. The best coating properties were achieved with the magnetron operating DC at a pressure of 5 mTorr, a voltage of 360 V, and a current of 1.4 A. Higher pressure DC operation was at a pressure of 35 mTorr, a voltage of 340 V and a current of also 1.4 A. Experiments were performed with the magnetron operating AC (square-wave) of 40 kHz. For a pressure of 5 mTorr the voltage was 528 V and the current of 1.9 A, while for a pressure of 35 mTorr the voltage was 330 V and the current was 3 A. Note that AC operation required twice the power of DC operation: 1 kW versus 500 W.

Although beyond the scope of this paper, high pressure deposition experiments were performed in an attempt to generate matte deposition with, in principle, lower SEY. But, after reference 10 showed that well-scrubbed copper can have SEY max of 1, that R&D became unnecessary. Nevertheless, for those interested in high and low pressure deposition genres, photos are shown in the appendix.

Operating in the AC modes was supposed to have produced coating with better adhesion due to (argon) plasma ion bombardment during the time when the cathode was positively biased. However, as shown in section 6, good adhesion is obtained after proper surface preparation (discharge cleaning).

Surprisingly no problems were encountered in magnetron discharge initiation for the above operating parameters. There was no need for pre-ionization; pressure was first set, power supply turned on and the discharge started. Problems were encountered when attempting to operate at 2 mTorr or below as well as above 40 mTorr. Nevertheless, to safeguard against discharge extinguishes when coating RHIC, a small beta emitter is to be imbedded in each magnetron (like it's done in Krytron tubes with nickel-63) to keep discharge alive. Additionally, remote plasma ignition, similar to the way is been done in plasma windows, utilizing a Tesla coil and high voltage power are also to be incorporated.

Routine magnetron operation has coating rate 0.0125"/sec or 3.175×10^{-4} meter/sec in 500 W DC operation. Therefore, it would take 1.57×10^{6} seconds or 18.22 days of magnetron sputtering operation to coat a 500 meter long section of RHIC.

As mentioned in the previous section, 85% copper utilization was achieved. Copper volume of the 50 cm long 0.2" (0.508 cm) thick copper cathode tube (with a 5.5 cm radius) is 439 cm^3 of which (85%) 373 cm^3 can be deposited. That deposited copper volume can cover 10 µm thick, 7.1 cm diameter 167 meter long pipe. Therefore, in principle 500 meter section can be coated with about three cathode reloading. However, with realistic contingencies, 5 to 7 reloading will probably be needed.

VI. COPPER COATING RF RESISTIVITY AND SEY

Room and cryogenic temperature SEY measurements were performed at CERN on 2 μm, 5 μm, & 10 μm thick OFHC coated stainless steel samples. Obtained results coupled with those of literature[10, 14-17] indicate that baked & scrubbed copper coating can achieve a SEY max of 1. For completeness it should be pointed out that recently it has been shown that well-scrubbed stainless steel, by electrons and positrons[20], can have its SEY max reduced to 1.3.

RF resistivity measurements[16,17] were performed on 32 cm long RHIC stainless steel tubes coated with 2 μm, 5 μm, and 10 μm, thick OFHC with a folded quarter wave resonator structure. Q values were measured for eight resonant modes in the range of 180 MHz to 2 GHz, from which conductivity values were deduced. Those measurements[16,17] indicated that for the later 2 coatings conductivity was about 5×10^7 mho/meter or about 84% of pure copper. Since joints and connectors reduce the experimentally measured Q, the conductivity value of coatings may be even closer to pure solid copper. Additional details can be found in references 16 and 17. Computations indicate[21] that 10 μm of copper should be acceptable for even the most extreme future scenarios.

Although no published data, on resistivity and transparency, is available for aircraft canopies coated by the system developed at PVI, it obvious that these coating meet the needed requirements; no problems were reported due to these coatings.

VII. COPPER COATING ADHESION STRENGTH

Top industry choice for copper coating stainless steel with good adhesion is to pre-coat the stainless steel with nickel. This option, however, is precluded in this case, since nickel is magnetic. Other pre-coating options were chrome that is hard to sputter and titanium, which was tried. After some trial and error effort, bi-metal copper and titanium magnetron operated successfully to deposit a thin layer of titanium followed by copper coating. Copper to titanium adhesion was excellent; but, titanium adhesion to

stainless steel was not consistently good. Finally, a discharge cleaning procedure, which resulted in excellent adhesion of copper to stainless steel, was developed.

Consistent coatings with good adhesion are achieved routinely with discharge cleaning. Although discharge cleaning for surface preparation has been known for a while[22], ours was optimized with a first (proprietary) step that may not be needed in RHIC, whose vacuum system is clean. The vacuum tubes used in these experiments spent a number of years outdoors and were exposed to the elements. Hence, there was a need for significant cleaning prior to discharge cleaning.

Next a positive voltage (of about 1 kV) is applied to the magnetron or a separate cleaning anode; the discharge is then moved down the tube at a pressure of about 2 Torr.

To test the adhesion strength, a 1/2” wide 1/8” thick sheet of copper was soldered to the 10 μm copper coating of a section of a copper coated stainless steel pipe, which was cut out and inserted in a pull test fixture as shown in figure 7. The optimized results yielded adhesion strength of over 12 kg (the maximum capability pull test fixture) or at least 2.9×10^6 N/m^2. This fact bodes well for magnetic quench survival. Photos of the pull fixtures are shown in figure 7.

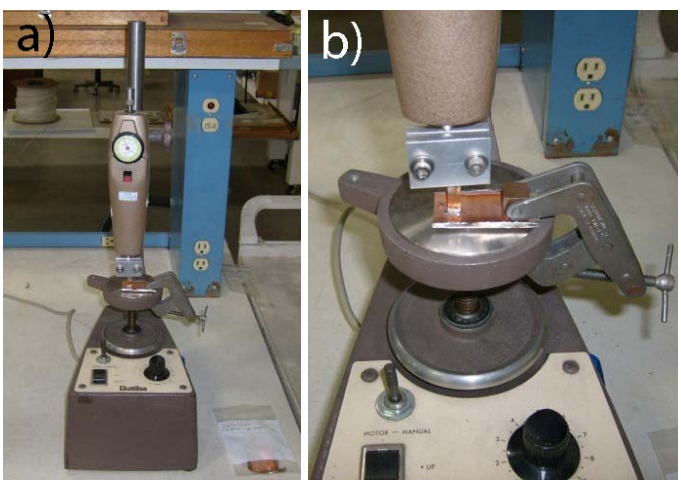

Figure 7: (Color Online) Photos of the pull fixture: (a) entire fixture, (b) test sample view.

VIII. REMAINING ISSUES

While aircraft canopy coating is a well-established technology, there are two remaining issues for RHIC copper coating that must be resolved: determination and

optimization of the RF conductivity at cryogenic temperatures and performing a magnet quench tests with copper coated RHIC cold bore tubing. Otherwise the mechanism of in-situ copper coating the RHIC cold bore resistivity seems feasible. Since the resistivity at cryogenic temperature might be different, it must be measured before embarking on a large task of coating 500 m RHIC cold bore sections.

Furthermore, **s**tudies that were made for thick copper coatings exceeding a micrometer or more have shown that the upper layers of the coatings[23,24] have columnar and other grain structure rather than crystalline. Additionally, as covered in a number of books[25-29], it is a known fact that at low temperatures, electrical conductivity is strongly affected by lattice imperfections and by impurities. In the case of room temperature copper, conductivity is dominated by conduction band electrons, while at cryogenic temperatures, lattice defects and impurities result in very large conductivity reduction. Physically, electrons are scattered off lattice defects, small grains and impurities, causing conductivity reduction.

Ion assisted deposition (IAD) has been known to produce thin film deposition with qualities that are far superior to other deposition methods[30-32]. This method can be used for both physical vapor deposition (PVD) and chemical vapor deposition (CVD). IAD technique establishes a gradual transition between the substrate material and the deposited film and a denser more adherent film. Using IAD to enhance the deposition process also results in thin films with less mechanical stress than can be achieved by other known techniques. Subsequently IAD results in films with a much stronger and more durable adhesion to the substrate. Additionally, IAD eliminates the columnar microstructure often observed in conventional, low temperature physical vapor deposition

to create very dense film structures; in fact IAD can increase the packing densities of optical coatings[31,32] by an order magnitude.

However, IAD requires simultaneous use of an evaporator and an ion beam source, which until recently generated low currents only (micro to milli-Ampere range) and IAD systems were bulky. Hence IAD processes were slow, which increased product price. Consequently, after applying low current IAD to the manufacturing of inexpensive tools, this method was determined not to be commercially viable. Neither is IAD, in that form, suitable for in-situ coating narrow tubes. Presently, IAD is being used primarily in the manufacturing of high-value items, such as aerospace and medical products. Nevertheless, with the advent of the End-Hall ion source, IAD becomes viable for application in tight spaces.

The End-Hall ion source, developed by Kaufman et al[33], generates large currents (up to Ampere levels) with sufficient energy (100's of Volts) to be utilized even in production applications[34], 100's of Volt ions are adequate for several high-value aerospace and commercial medical products[35].

IX. IAD Coating of Long Narrow Tubes and RF Cavities

For reasons described in the introduction, the "Holy Grail" of fabricating cheaper, SRF cavities and electron guns with superior mechanical properties has been to develop a thin film based superconducting coating. To accomplish this goal various thin film deposition methods[36-40] were used. But straightforward deposition tends to result in thin films with lattice defects and impurities, which at cryogenic temperature severely degrades conductivity. Consequently, With only one documented exception[37], none of the superconducting film coating efforts resulted in good outcomes including very recent

results[27], where achieved RRR, which needs to reach 100, did not exceed 22 (and was as low as RRR=2). Even in the only "successful" documented superconducting coating of a copper RF cavity, the production process took 9 weeks for one cavity[37], due to the need for repeated heating (up to 620 C) and cooling. This procedure is unacceptable for numerous devices and machines (e.g. RHIC) due to potential for damage to magnets during the heating cycle and since the results are not very reproducible as 2 to 3 attempts at coating were required for each cavity[37,38].

RF cavity niobium coating can be performed with IAD, utilizing End-Hall ion sources. Furthermore, IAD is suitable film deposition for any application that will operate at cryogenic temperatures, where elimination of lattice defects is crucial; if needed, IAD can be used for the RHIC cold bore tubes.

Due to the large variety of RF cavities it's obvious that detailed design of coating devices will be different for each type of cavity; but the same IAD coating technique can be utilized. PVI robotic coating equipment for aircraft canopies is to be adapted for RF cavity coating. A modified version of conformal magnetrons and a new, End-Hall ion source specifically designed for this coating application mounted on robotic manipulators are to be employed for coating RF cavities with niobium.

As an example, below is diagram for cavity coating device of a rather challenging RHIC 200 MHz storage cavity is shown in figure 8 (by comparison some cavities, which have basically cylindrical shapes are easier to coat). A conformal planar magnetron and an End-Hall ion source can be clearly seen in figure 8.

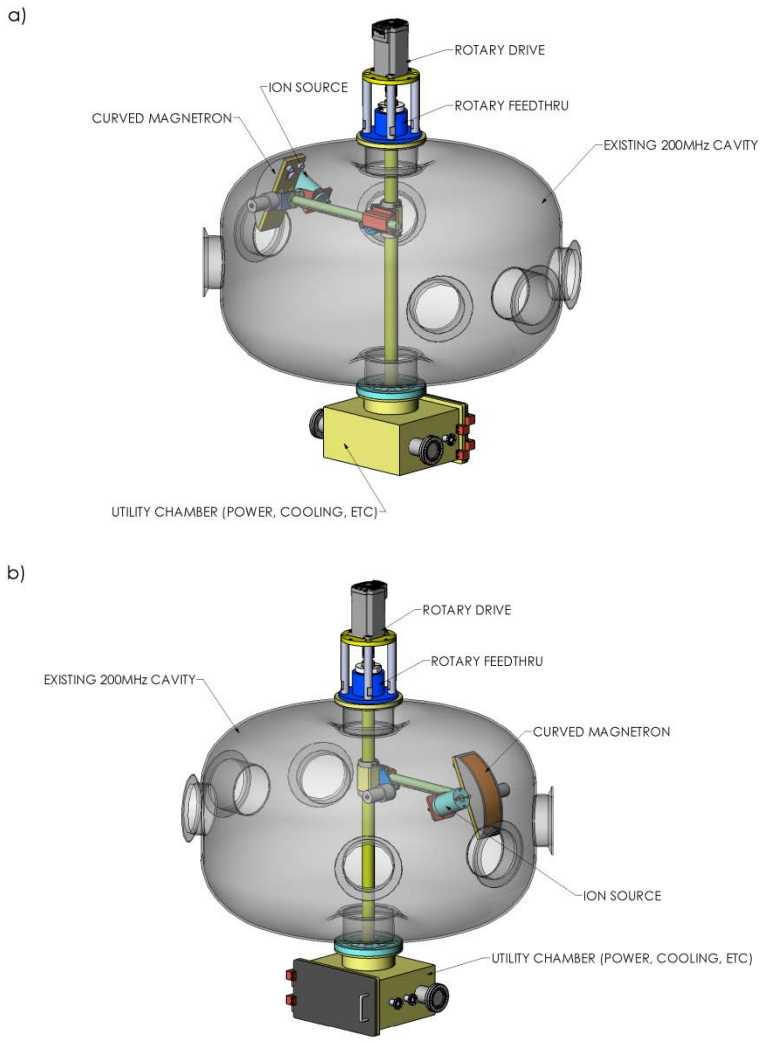

Figure 8: (Color Online) device and technique schematic for RF cavity coating (from two prospectives).

As a contingency, in case present state-of-the-art RHIC copper coating does not result in the desired resistivity reduction at cryogenic temperatures, the magnetron mole described in section 3 can be modified into an IAD device by incorporating ion bombardment. Figure 9 shows two option. Figure 9a displays the concept of ion assisted deposition based on a magnetron sandwiched between two positively biased concavely curved surfaces. To enhance surface plasma of the ion emitter, ring magnets are enclosed,

and if needed, electron emitters will be imbedded in the surface, as it's done in Krytron tubes with nickel-63 to keep the plasma discharge alive.

Utilizing the existing 50 cm long cathode magnetron, by inserting an insulator between the anodes and mounting of the spring loaded wheels, seems to be a straightforward implementation of IAD, as displayed in figure 9b. High transparency grids can be mounted on the magnetron, which can then be biased to a few 100 Volts.

a)

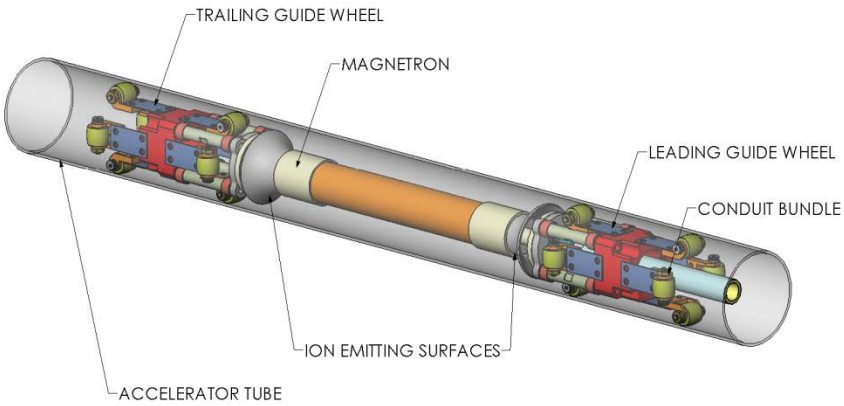

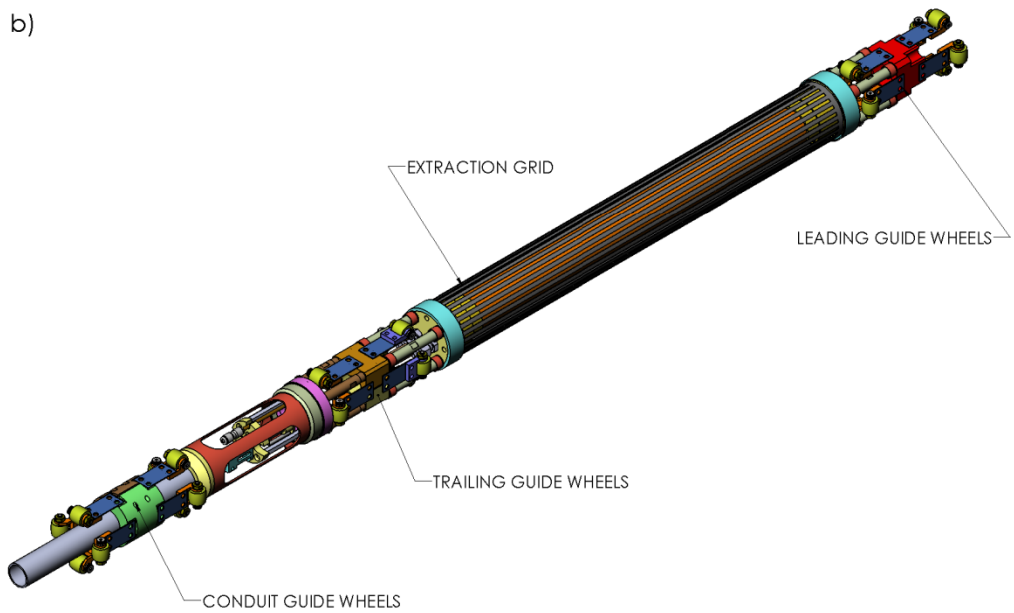

Figure 9: (Color Online) (a) Drawing of a cylindrical magnetron sandwiched between two positively biased concavely curved surfaces ion emitter for IAD. Not shown are magnets enclosed in the positively biased structures. (b) Schematic of integrated IAD magnetron for coating long narrow tubes. Insulators (in blue) are covered with overlapping shields to prevent exposure to plasma and metal deposition.

In either IAD scenario coating rates are expected to be reduced by a factor that could be as high as 2, for multiple reasons Inherently, IAD is a slower process than simple straightforward deposition due to the need for ion bombardment to compress deposited particles into proper crystalline structure as successive layers are deposited. In the case of RHIC, deposition power cannot exceed 1 kW to prevent damage to magnets.

X. CONCLUSION

Devices and techniques described in this paper strongly suggest that in-situ PVD coating of very long, small diameter tubes, as well as elliptical and other surface contour objects, is feasible.

ACKNOWLEDGMENTS

Work supported under Contract No. DE-AC02-98CH1-886 with the US Department of Energy. One of us (A.H.) gratefully acknowledges Mauro Taborelli for his advice and members of Mauro's group at CERN for performing SEY measurements. Notice: This manuscript has been authored by Brookhaven Science Associates, LLC under Contract No. DE-AC02-98CH1-886 with the US Department of Energy.

APPENDIX

To generate deposition genres, high and low pressure magnetron operations of 5 and 35 mTorr in both DC and square-wave AC of 40 kHz; the working gas was argon in all cases. Although best coating properties were achieved with the magnetron operating DC at a pressure of 5 mTorr, the reasoning for high pressure operation was that upper layer are amorphous, matte in appearance, and thus having low SEY max like gold black. Figure 10 display coated samples generated in the four operation modes, which show that higher pressure resulted in matte coating while lower pressure yield shining coatings.

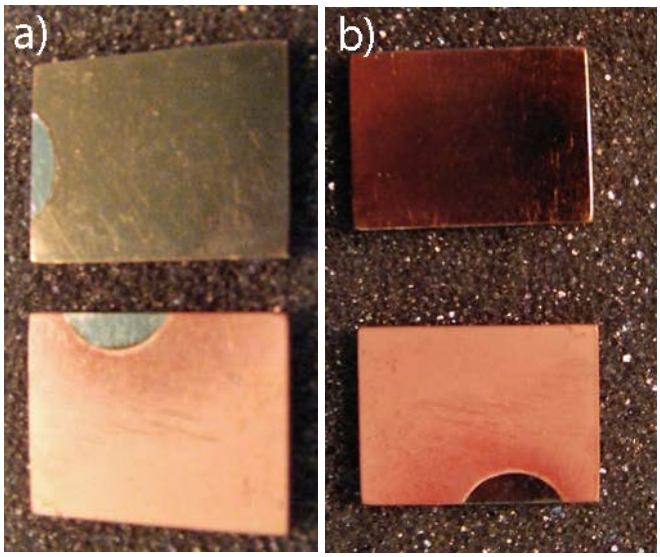

Figure 10: (Color Online) Photos of coated samples in DC operation (a) upper matte at 35 mTorr, lower shinning at 5 mTorr. Similarly AC operation resulted in (b) upper matte at 35 mTorr and lower shinning at 5 mTorr.

Indeed as it can be seen in figure 10, AC operation did generate darker less shinning coatings than DC depositions.

REFERENCES

1. Covered in many textbooks, e.g. A.W. Chao, "Physics of Collective Beam Instabilities in High Energy accelerators", John Wiley & sons Inc. N. Y. (1993).
2. R.P. Reed and A.F. Clark, Editors "Materials at Low Temperatures" American Society of Materials (1983).
3. N.J. Simon, E.S. Drexler, and R.P. Reed, "Properties of Copper and Copper Alloys at Low Temperatures", NIST monograph 177, Government Printing Office (1992).
4. U. Iriso and S. Peggs, Phys. Rev. ST Accel. Beams **8**, 024403 (2005).
5. U. Iriso and S. Peggs, Phys. Rev. ST Accel. Beams **9**, 071002 (2006).
6. W. Fischer M. Blaskiewicz, J. M. Brennan, H. Huang, H.-C. Hseuh, V. Ptitsyn, T. Roser, P. Thieberger, D. Trbojevic, J. Wei, S. Y. Zhang, and U. Iriso, Phys. Rev. ST Accel. Beams 11, 041002 (2008).
7. E.L. Garwin, F.K. King, R.E. Kirby, and O. Aita, J. Appl. Phys. **61**, 1145 (1987).

8. P. Chiggiato, "*Surface treatments and coatings for the mitigation of electron clouds*", presentation to the 23rd LHC Machine Advisory Committee Meeting, 16 June 2008.
9. C. Yin Vallgren, G. Arduini, J. Bauche, S. Calatroni, P. Chiggiato, K. Cornelis, P. Costa Pinto, B. Henrist, E. Métral, H. Neupert, and G. Rumolo, Phys. Rev. ST Accel. Beams **14**, 071001 (2011).
10. A. Kuzucan, H. Neupert, M. Taborelli, and H. Stori, J. Vac. Sci. Technol. A **30**, 051401 (2012). Mauro Taborelli, private communication 2012; M. Furman, private communication 2012.
11. C. Benvenuti, P. Chiggiato, F. Cicoira, and Y. L'Aminot, J. Vac. Sci. Technol. A **16**, 148 (1998)
12. John L. Vossen and Werner Kern Editors, "Thin Film Processes" Academic Press, New York (1978).
13. A.L. Ryabchikov, Surface and Coatings Technology **96**, 9 (1997).
14. A. Hershcovitch, M. Blaskiewicz, W. Fischer, http://trshare.triumf.ca/~pac09proc/Proceedings/.
15. A. Hershcovitch, M. Blaskiewicz, J.M. Brennan, A. Custer, M. Erickson, W. Fischer, N. Jamshidi, C-J Liaw, W. Meng, H. J. Poole, N. Sochugov, M. Taborelli, and R. Todd "*Versatile Device for In-situ Discharge Cleaning and Multiple Coatings of Long, Small Diameter Tubes*" *http://accelconf.web.cern.ch/AccelConf/IPAC10/papers/tupea082.pdf*.
16. A. Hershcovitch, M. Blaskiewicz, J.M. Brennan, A. Chawla, A. Custer, M. Erickson, W. Fischer, N. Jamshidi, J. M. Jimenez, P. Kobrin, A. Kuzucan, R. Laping, C-J Liaw, W. Meng, H. Neupert, H. J. Poole, N. Sochugov, M. Taborelli, R. Todd, and C. Yin-Vallgren, "*Recent RHIC In-Situ Coating Technology Developments*" http://ecloud12.web.cern.ch/ecloud12/proceedings/edited/hershcovitch-edited.pdf
17. A. Hershcovitch, M. Blaskiewicz, J.M. Brennan, A. Chawla, A. Custer, M. Erickson, W. Fischer, N. Jamshidi, J. M. Jimenez, P. Kobrin, A. Kuzucan, R. Laping, C-J Liaw, W.

Meng, H. Neupert, H. J. Poole, N. Sochugov, M. Taborelli, R. Todd, and C. Yin-Vallgren, IPAC'13 proceedings, "*Device and Technique for In-Situ Coating of the RHIC Cold Bore Vacuum Tubes with Thick OFHC*" https://www.bnl.gov/isd/documents/81539.pdf or http://epaper.kek.jp/IPAC2013/papers/thpfi093.pdf

18. A.I. Hershcovitch, V.J. Kovarik, and K. Prelec, Rev. of Sci. Instrum. **57**, 827 (1986).
19. A. Hershcovitch, Physics of Plasmas, **5**, 2130 (1998).
20. W. Hartung, J. Conway, C. Dennett, S. Greenwald, J.-S. Kim, Y. Li, T. Moore, and V. Omanovic, "*Measurements of Secondary Electron Yield of Metal Surfaces and Films with Exposure to a Realistic Accelerator Environment"* http://accelconf.web.cern.ch/AccelConf/IPAC2013/papers/thpfi087.pdf
21. M. Blaskiewicz, "Copper Coating Specification for the RHIC Arcs", C-A/AP/ note #413 Dec 2010 (unpublished).
22. R.W. Vasofsky, "Vapor Deposition of Copper on Stainless Steel 304L", ORNL report Y/DZ 1032, August 17, 1993.
23. J.A. Thornton, J. Vac. Sci. Technol. **11**, 666 (1974).
24. J.A. Thornton, J. Vac. Sci. Technol. **12**, 830 (1975).
25. C. Kittel, Introduction to Solid State Physics, 5th ed., Wiley, New York, 1976.
26. M. W. Zemansky, Heat and Thermodynamics, 3rd ed., McGraw-Hill, New York, 1968.
27. G. White, Experimental Techniques in Low Temperature Physics, 3rd Ed., Clarendon press, Oxford, 1979.
28. J. W. Ekin, Experimental Techniques for Low Temperature Measurements, Oxford University Press, Oxford, 2006.
29. S.W. Van Sciver, Helium Cryogenics, International Cryogenics Monograph Series, DOI 10.1007/978-1-4419-9979-5_2, # Springer Science+Business Media, LLC 2012.
30. John L. Vossen and Werner Kern Editors, "*Thin Film Processes*" Academic Press, New York (1978). Section by J.L. Vossen and J.J. Cuomo on p. 50.

31. P. J. Martin, H. A. Macleod, R. P. Netterfield, C. G. Pacey, and W. G. Sainty, Applied Optics, **22**, pp. 178-184 (1983).
32. D. Manova, J. W. Gerlach, and S. Mändl, Materials **3**, 4109-4141 (2010).
33. H. Kaufman, R. Robinson, and R. Seddon, J. Vac. Sci. Technol. A, 5, 2081 (1987).
34. M. Fulton, "Application of ion assisted-deposition using a gridless end-HaIl ion source for volume manufacturing of thin-film optical filters" SPIE Vol. 2253 pp. 374 – 393 http://proceedings.spiedigitallibrary.org/ and M. Fulton "Developments in Energetic Processes for Optical Coating Applications" SPIE_Paper_5527-9_p 69_Denver_2004.
35. N2 Biomedical (previously Spire Biomedical) http://www.n2bio.com/index.php
36. R. Di Leo, A. Nigro, G. Nobile, R. Vaglio, J. Low Temp. Phys. 78, 41 (1990).
37. A. Sublet et al. "Nb Coated HIE-ISOLDE QWR Superconducting Accelerating Cavities: from Process Development to Series Production", IPAC2014 proceedings, June 2014 Dresden G. http://accelconf.web.cern.ch/AccelConf/IPAC2014/papers/wepri042.pdf.
38. S. Wilde, R. Valizadeh et al. "Development of Thin Films for Superconducting RF Cavities", IPAC2014 proceedings, June 2014 Dresden Germany, http://accelconf.web.cern.ch/AccelConf/IPAC2014/papers/wepme058.pdf.
39. Sergey Belomestnykh, private communication 2014.
40. M. Krishnan et al, "Coaxial Energetic Deposition (CEDTM) of superconducting thin films of Nb for RF cavities", 3rd International Workshop on "Thin films applied to Superconducting RF and new ideas for pushing the limits of RF Superconductivity" July 2008. http://www.jlab.org/conferences/tfsrf/

FIGURE CAPTIONS

1. (Color Online) RHIC magnets: (a) Cross section of a superconducting RHIC magnet containment shell, showing the magnet yoke, helium cooling pipes, etc. (b) a 9.7 meter long dipole magnet; its outer containment shell is 84 cm diameter. The inner containment shell, which is at liquid helium temperature and encloses

the iron yoke, is 34 cm in diameter. (c) Drawing showing connections between magnets; beam pipe and conduits are connected through bellows.

2. (Color Online) Photos of the magnetron assembly: (a) 50-cm long cathode magnetron and spring loaded guide wheels. Leading edge guide wheels are inserted in a full-size RHIC tubing section. Photo (b) showing the whole magnetron and additional drive assembly; the cylinder on the right after the flex-joint is motorized. The numbers represent distance in inches from the first wheels on the left.
3. (Color Online) Drawings showing two types of mechanisms for moving the 50-cm long cathode magnetron magnet package hydraulic (a) and magnet drive motor motion (b).
4. (Color Online) Erosion of 50-cm copper cathodes: hydraulic driven mechanism (top) and magnet drive motor motion (bottom).
5. (Color Online) Photos of the umbilical system that feed into the tube bellow assembly (a) and the cable bundle drive and spool (b).
6. Figure 6: (Color Online) drawings of the guides with flexible wheel arms and clamps to enable mounting when the cable bundle (conduit) is pulled into the beam pipe and dismounting as the cable bundle is coiled on the spool.
7. (Color Online) Photos of the pull fixture.
8. (Color Online) device and technique schematic for RF cavity coating (from two prospectives).
9. (Color Online) (a) Drawing of a cylindrical magnetron sandwiched between two positively biased concavely curved surfaces ion emitter for IAD. Not shown are magnets enclosed in the positively biased structures. (b) Schematic of integrated IAD magnetron for coating long narrow tubes. Insulators (in blue) are covered with overlapping shields to prevent exposure to plasma and metal deposition.
10. (Color Online) Photos of coated samples in DC operation (a) upper matte at 35 mTorr, lower shinning at 5 mTorr. Similarly AC operation (b) upper matte at 35 mTorr and lower shinning at 5 mTorr.