BNL-101333-2016-CP

# *SRF for low energy RHIC electron cooling: preliminary conditions*

**S. Belomestnykh[1,2], I. Ben-Zvi[1,2], M. Blaskiewicz[1], Z. A. Conway[3], A. Fedotov[1], D. Kayran[1], M. Kelly[3], S. A. Kutsaev[3], V. Litvinenko[1,2], B. Mustapha[3], P. N. Ostroumov[3], Q. Wu[1], B. Xiao[1], W. Xu[1], A. Zaltsman[1]**

[1]Brookhaven National Laboratory, Upton, NY 11973 USA
[2]Stony Brook University, Stony Brook, NY 11794 USA
[3]Argonne National Laboratory, Argonne, IL 60439 USA

*Presented at the 16th International Conference of RF Superconductivity (SRF 2013)*
Maison Internationale Universitaire, Paris, France
September 23 – 27, 2013

January 2016

**Collider Accelerator Department**

**Brookhaven National Laboratory**

**U.S. Department of Energy**
**Office of Science, Office of Nuclear Physics**

Notice: This manuscript has been authored by employees of Brookhaven Science Associates, LLC under Contract No. DE-AC02-98CH10886/DE-SC0012704 with the U.S. Department of Energy. The publisher by accepting the manuscript for publication acknowledges that the United States Government retains a non-exclusive, paid-up, irrevocable, world-wide license to publish or reproduce the published form of this manuscript, or allow others to do so, for United States Government purposes.

# DISCLAIMER

This report was prepared as an account of work sponsored by an agency of the United States Government. Neither the United States Government nor any agency thereof, nor any of their employees, nor any of their contractors, subcontractors, or their employees, makes any warranty, express or implied, or assumes any legal liability or responsibility for the accuracy, completeness, or any third party's use or the results of such use of any information, apparatus, product, or process disclosed, or represents that its use would not infringe privately owned rights. Reference herein to any specific commercial product, process, or service by trade name, trademark, manufacturer, or otherwise, does not necessarily constitute or imply its endorsement, recommendation, or favoring by the United States Government or any agency thereof or its contractors or subcontractors. The views and opinions of authors expressed herein do not necessarily state or reflect those of the United States Government or any agency thereof.

# SRF FOR LOW ENERGY RHIC ELECTRON COOLING: PRELIMINARY CONSIDERATIONS*

S. Belomestnykh[1,2#], I. Ben-Zvi[1,2], M. Blaskiewicz[1], Z. A. Conway[3], A. Fedotov[1], D. Kayran[1], M. Kelly[3], S. A. Kutsaev[3], V. Litvinenko[1,2], B. Mustapha[3], P. N. Ostroumov[3], Q. Wu[1], B. Xiao[1], W. Xu[1], A. Zaltsman[1]

[1)] Brookhaven National Laboratory, Upton, NY 11973-5000, U.S.A.
[2)] Stony Brook University, Stony Brook, NY 11794, U.S.A.
[3)] Argonne National Laboratory, Argonne, IL 60439, U.S.A.

*Abstract*

A search for the QCD Critical Point has renewed interest in electron cooling of RHIC ion beams at energies below 10 GeV/nucleon. The electron cooling will utilize bunched electron beams from an SRF linac at energies from 0.9 to 5 MeV. The SRF linac will consist of two quarter-wave structures: a photoemission electron gun and a booster cavity. In this paper we present preliminary design considerations for this SRF linac.

## INTRODUCTION

A search for the QCD Critical Point requires ion-ion collisions at low energies, below 10 GeV/nucleon, RHIC will have to operate below injection energy. However the collider luminosity drops rapidly as particles are decelerated. To alleviate this effect, a cooling scheme with bunched electron beams was proposed [1]. The electron cooler will have to deliver high average current and high bunch charge beams at energies from 0.9 to 5 MeV.

Beams for the Low Energy RHIC electron Cooling (LEReC) will be provided by a short superconducting RF (SRF) linac, which comprises a quarter wave resonator (QWR) photoemission electron gun, a QWR SRF booster and a normal conducting harmonic cavity to correct RF-induced energy spread. Unlike QWRs for low-$\beta$ linacs, the LEReC cavities operate in a horizontal orientation. The two SRF structures will be housed in the same cryomodule with a superconducting solenoid in between. In this paper we describe the requirements for such an SRF linac and the preliminary design considerations.

## SRF LINAC REQUIREMENTS

Parameters of the LEReC electron linac for two representative beam energies and two choices of RHIC RF frequency are listed in Table 1. A new low-frequency 4.6 MHz RF system was proposed [2] to extend the low energy reach of RHIC down to $\gamma = 2.7$. At higher energies, operations with either the old RF system (28 MHz) or the new one are feasible.

The electron beam will be generated by illuminating a multi-alkali ($CsK_2Sb$ or $NaK_2Sb$) photocathode with green (532 nm) light from a laser. The photocathode is inserted into an 84.5 MHz quarter-wave SRF cavity thus forming an SRF photoemission electron gun. The photocathode is located in a high electric field. Immediate acceleration of the electrons to a high energy reduces emittance degradation caused by a strong non-linear space-charge force. The low RF frequency of the gun reduces the effect of RF curvature on the beam. The gun will produce bunch trains with relatively long electron bunches, about 750 ps, with a 84.5 MHz bunch repetition frequency. The bunch train repetition rate will be the same as the repetition rate of ion bunches in RHIC. The optical system will allow creation of dedicated bunch patterns for different RHIC energies and ion bunch lengths with several bunches spaced at the 84.5 MHz frequency followed by a long gap corresponding to the frequency of ion bunches.

While the required beam current (up to 35.8 mA) has yet to be demonstrated from an SRF gun, even higher beam currents were already achieved from photocathodes in an RF gun [3] and a DC gun [4].

The SRF gun design will be similar to the 112 MHz SRF gun developed for the Coherent electron Cooling Proof of Principle (CeC PoP) experiment at BNL [5], with the following major differences: 1) The gun cavity shape will be optimized to improve surface fields and reduce wall losses; 2) The gun will be equipped with two high-power fundamental RF power couplers; 3) There will be a frequency tuner of an improved design. The cathode insertion mechanism and the photocathode stalk will be scaled copies of the 112 MHz gun designs [6, 7].

The RF power, up to 93 kW per cavity, will be delivered via two symmetrically located fundamental power couplers (FPCs). The couplers will be of a coaxial antenna type with fixed coupling. Computer simulations show that the SNS-type coaxial RF window has very good RF properties at 84.5 MHz. At SNS, these windows operate at average RF power exceeding 100 kW. At BNL, we use similar windows in the FPCs of the ERL SRF gun and five-cell cavity.

The sinusoidal shape of the SRF voltage introduces a quadratic beam energy spread due to on-crest acceleration. To bring the energy spread within the required $5\cdot10^{-4}$, we plan to use a 6th harmonic normal conducting copper cavity. Correction of the energy spread will require an acceleration voltage up to 138 kV.

* Work is supported by Brookhaven Science Associates, LLC under Contract No. DE-AC02-98CH10886 with the U.S. DOE
#sbelomestnykh@bnl.gov

Copyright © 2013 by the respective authors

## SRF GUN AND BOOSTER CAVITY SHAPE OPTIMIZATION

The cavity shape optimization goals are to keep the peak surface electric and magnetic fields below 40 MV/m and 80 mT correspondingly, and to improve the cavity RF performance. The surface fields cited above are accepted in the SRF community as "rule of thumb" design goals for CW operation. As the beam pipe aperture in LEReC injector is reduced from 10 cm to 5 cm as compared to CeC PoP, it makes it easier to achieve the desired peak surface fields in the cavities. Preliminary optimization of the cavity shape (Figure 1) shows that achieving the goals is possible: see the cavity parameters in Table 1. ANL has a proven record of designing and building low-$\beta$ QW cavities that exceed the LEReC requirements for maximum surface fields [8, 9].

Table 1: Parameters of the LEReC Electron Linac

| | | | |
|---|---|---|---|
| **Beam** | | | |
| Lorentz factor | 4.1 | 10.7 | 10.7 |
| RHIC RF frequency | 4.55 MHz | 4.67 MHz | 28.03 MHz |
| Electron beam kinetic energy | 1.58 MeV | 4.96 MeV | 4.96 MeV |
| Total charge per bunch train | 4 (9 bunches) | 7 (5 bunches) | 4 (2 bunches) |
| $\Delta p/p$, rms | 5e-4 | 5e-4 | 5e-4 |
| Normalized rms emittance | 2.5 mm·mrad | 2.5 mm·mrad | 2.5 mm·mrad |
| Transverse rms beam size | 4.3 mm | 2.6 mm | 2.6 mm |
| Full bunch duration | 0.5 to 1 ns | 0.5 to 1 ns | 0.5 to 1 ns |
| Electron beam current | 18.2 mA | 32.7 mA | 35.8 mA |
| Beam power | 28.8 kW | 162 kW | 178 kW |
| **SRF gun and booster** | | | |
| SRF frequency | 84.48 MHz | 84.47 MHz | 84.47 MHz |
| Gun voltage | 1.65 MV | 2.58 MV | 2.58 MV |
| Peak surface electric filed, $E_{pk}$ | 25.7 MV/m | 40.3 MV/m | 40.3 MV/m |
| Peak surface magnetic field, $B_{pk}$ | 52.5 mT | 82.2 mT | 82.2 mT |
| $R/Q$ | 122.7 Ohm | 122.7 Ohm | 122.7 Ohm |
| Geometry factor, $G$ | 34.7 Ohm | 34.7 Ohm | 34.7 Ohm |
| Cavity intrinsic quality factor, $Q_0$, at 4.5 K | >1.7e9 | >1.7e9 | >1.7e9 |
| Loaded $Q$ factor | 5.3e5 | 5.3e5 | 5.3e5 |
| Gun RF power | 30.7 kW | 84.9 kW | 92.5 kW |
| Frequency tuning range | 78 kHz | 78 kHz | 78 kHz |
| Booster voltage | 0 | 2.58 MV | 2.58 MV |
| Booster RF power | 0 | 84.9 kW | 92.5 kW |
| **Other parameters** | | | |
| Harmonic cavity frequency | 506.9 MHz | 506.9 MHz | 506.9 MHz |
| Harmonic cavity voltage | 63.4 kV | 198 kV | 198 kV |
| Lase wavelength | 532 nm | 532 nm | 532 nm |
| Average optical power on cathode | 0.85 W | 1.52 W | 1.67 W |
| Laser time jitter, rms | 100 ps | 100 ps | 100 ps |
| Bunch charge jitter, rms | 7 | 7 | 7 |

Copyright © 2013 by the respective authors


ISBN 978-3-95450-143-4

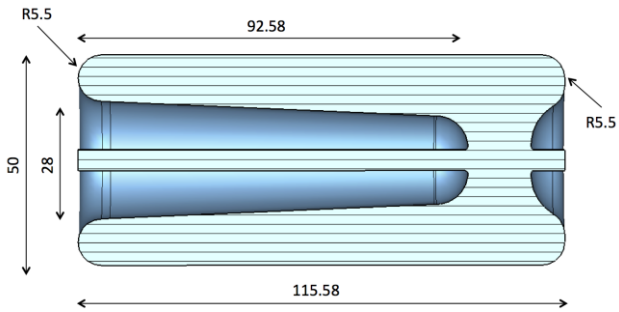


Figure 1: An optimized geometry proposed for the 84.5 MHz SRF booster cavity (all dimensions are in cm). This geometry has lower surface fields and higher *G·R/Q* parameter than the original 112 MHz SRF gun cavity.

The booster cavity will be of a similar design as the gun, but with a simplified center conductor as there will be no need to accommodate the photocathode stalk. Both cavities will be designed to provide energy gain up to 2.6 MeV per cavity. At lower energies, the booster cavity might be turned off and detuned to become "transparent" to the beam. Figure 1 shows one of the optimized geometries proposed for the SRF cavities. Both the SRF gun and the booster cavity will be housed in a single cryostat with a superconducting solenoid occupying the space between them.

## SUMMARY

We are considering a new SRF linac for the LEReC project under development at BNL. The short linac will have to deliver a bunched electron beam with energies from 0.9 to 5 MeV and average currents up to 35.8 mA. The linac will comprise two QWR SRF structures, a photoemission electron gun and a booster cavity, and a normal conducting harmonic cavity for compensation of the beam energy spread induced by SRF cavities. The SRF structures will be housed in a single cryomodule with a focusing superconducting solenoid placed between them. Our plans are to design, fabricate and test the SRF cavities in a vertical cryostat within the next two years.

## REFERENCES

[1] A. Fedotov et al., "Bunched Beam Electron Cooler for Low-energy RHIC Operation," to be presented at NA-PAC'13, Pasadena, CA, 2013, TUOAA1.

[2] V. Litvinenko, "Choosing RF system for low energy RHIC operation", BNL Collider-Accelerator Department Tech Note: C-A/AP/476 (December 2012).

[3] D. Dowell, et al., "First operation of a photocathode radio frequency gun injector at high duty factor," *Appl. Phys. Lett.* **63**, 2035 (1993).

[4] B. Dunham, et al., "Record high-average current from a high-brightness photoinjector," *Appl. Phys. Lett.* **102**, 034105 (2013).

[5] S. Belomestnykh, et al., "Superconducting 112 MHz QWR electron gun," *Proc. SRF2011* (Chicago, IL, USA, 2011), pp. 223-225.

[6] T. Xin, et al., "Design of the fundamental power coupler and photocathode inserts for the 112 MHz superconducting electron gun, *Proc. SRF2011* (Chicago, IL, USA, 2011), pp. 83–86.

[7] S. Belomestnykh, et al., "SRF Systems for the Coherent Electron Cooling Demonstration Experiment," MOP16, these proceedings.

[8] M. Kelly, et al., "Cold testing of superconducting 72 MHz quarter-wave cavities for ATLAS," *Proc. LINAC2012* (Tel-Aviv, Israel, 2012), pp. 348-350.

[9] Z. Conway, et al., "Reduced-beta cavities for high-intensity compact accelerators," *Proc. LINAC2012* (Tel-Aviv, Israel, 2012), pp. 458-460.

Copyright © 2013 by the respective authors