BNL-111759-2016-CP

Commissioning of the 112 MHz SRF gun

S. Belomestnykh[1,2], I. Ben-Zvi[1,2], J. C. Brutus[1], T. Hayes[1], V. N. Litvinenko[1,2], K. Mernick[1], G. Narayan[1], P. Orfin[1], I. Pinayev[1], T. Roa[1], F. Severino[1], J. Skaritka[1], K. Smith[1], R. Than[1], J. Tuozzolo[1], E. Wang[1], Q. Wu[1], B. Xiao[1], T. Xin[1], A. Zaltsman[1]

[1]Brookhaven National Laboratory, Upton, NY 11973 USA
[2]Stony Brook University, Stony Brook, NY 11794 USA

Presented at the 17th International Conference on RF Superconductivity (SRF2015)
Whistler Conference Center, Whistler, Canada
September 13 – 18, 2015

January 2016

Collider Accelerator Department

Brookhaven National Laboratory

U.S. Department of Energy
Office of Science, Office of Nuclear Physics

Notice: This manuscript has been authored by employees of Brookhaven Science Associates, LLC under Contract No. DE-AC02-98CH10886/DE-SC0012704 with the U.S. Department of Energy. The publisher by accepting the manuscript for publication acknowledges that the United States Government retains a non-exclusive, paid-up, irrevocable, world-wide license to publish or reproduce the published form of this manuscript, or allow others to do so, for United States Government purposes.

DISCLAIMER

This report was prepared as an account of work sponsored by an agency of the United States Government. Neither the United States Government nor any agency thereof, nor any of their employees, nor any of their contractors, subcontractors, or their employees, makes any warranty, express or implied, or assumes any legal liability or responsibility for the accuracy, completeness, or any third party's use or the results of such use of any information, apparatus, product, or process disclosed, or represents that its use would not infringe privately owned rights. Reference herein to any specific commercial product, process, or service by trade name, trademark, manufacturer, or otherwise, does not necessarily constitute or imply its endorsement, recommendation, or favoring by the United States Government or any agency thereof or its contractors or subcontractors. The views and opinions of authors expressed herein do not necessarily state or reflect those of the United States Government or any agency thereof.

COMMISSIONING OF THE 112 MHZ SRF GUN*

S. Belomestnykh[#,1,2], I. Ben-Zvi[1,2], J. C. Brutus[1], T. Hayes[1], V. Litvinenko[1,2], K. Mernick[1], G. Narayan[1], P. Orfin[1], I. Pinayev[1], T. Rao[1], F. Severino[1],J. Skaritka[1], K. Smith[1], R. Than[1], J. Tuozzolo[1], E. Wang[1], Q. Wu[1], B. Xiao[1], T. Xin[2], A. Zaltsman[1]

[1)] Brookhaven National Laboratory, Upton, NY 11973-5000, U.S.A.
[2)] Stony Brook University, Stony Brook, NY 11794, U.S.A.

Abstract

A 112 MHz superconducting RF photoemission gun was designed, fabricated and installed in RHIC for the Coherent electron Cooling Proof-of-Principle (CeC PoP) experiment at BNL. The gun was commissioned first without beam. This was followed by generating the first photoemission beam from a multi-alkali cathode. The paper presents the commissioning results.

INTRODUCTION

A 112 MHz superconducting RF photoemission gun [1-3] is designed to provide an electron beam for the Coherent electron Cooling [4] Proof-of-Principle (CeC PoP) experiment under preparation at BNL [5]. The experiment aims to demonstrate the novel concept of cooling ions in the Relativistic Heavy Ion Collider (RHIC). The quarter-wave resonator was developed by BNL in collaboration with Niowave, Inc. The gun will be able to generate electron bunches with a charge up to 5 nC and repetition rate of 78 kHz, matching the RHIC revolution frequency. Parameters of the CeC SRF gun are listed in Table 1. A multi-alkali photocathode layer is deposited on small molybdenum pucks, several of which are stored in a "garage" under ultra-high vacuum. The garage is attached to the gun via a load lock. This allows quick exchange of the pucks inside a half-wavelength long hollow cathode stalk, which serves as an RF choke and is maintained at room temperature. Electrons are emitted when the cathode is illuminated with green (532 nm) light from a laser. Figure 1 depicts layout of the 112 MHz SRF gun components. More details of the gun design can be found in the cited references. In this paper we describe the gun installation and commissioning results, including generating the first electron beam [6]. A comprehensive analysis of the gun performance is under preparation [7].

INSTALLATION AND COMMISSIONING WITHOUT BEAM

Installation and commissioning of the CeC PoP experiment is accomplished in several phases. The gun cryomodule, together with associated sub-systems (cryogenics, RF, cooling water, vacuum, fundamental power coupler/tuner motion, cathodes insertion), was installed in RHIC during summer of 2014 as Phase I of the CeC PoP. The Phase I linac layout is shown in Figure 2. Its commissioning began in the fall of 2014 [8].

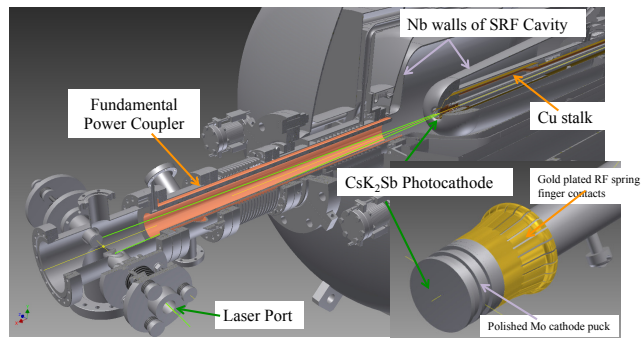

Figure 1: 112 MHz QW SRF gun with FPC, laser port and cathode stalk. Polished molybdenum cathode puck (inset) is housed inside the hollow copper stalk.

Table 1: Parameters of the 112 MHz QWR SRF Gun

RF frequency	112 MHz
Maximum energy gain	2.0 MeV
Electric field at the cathode	27.2 MV/m
Bunch charge	1 to 5 nC
Bunch repetition frequency	78 kHz
R/Q	127.3 Ohm
Geometry factor	38.5 Ohm
Cavity Q_0 at 4.5 K	1.8×10^9
Cavity RF losses at 2.0 MV	17 W
RF losses in the cathode stalk at 2.0 MV	38 W
Frequency tuning range	78 kHz
Frequency tuning with FPC	3 kHz
Q_{ext} of FPC, min.	1.25×10^7
Available RF power	2 kW
Photocathode material	CsK_2Sb
Laser wavelength	532 nm

* Work is supported by Brookhaven Science Associates, LLC under contract No. DE-AC02-98CH10886 with the US DOE
#sbelomestnykh@bnl.goc

Pre-Press Release - Copyright © 2015 CC-BY-3.0 and by the respective authors

ISBN 978-3-95450-178-6

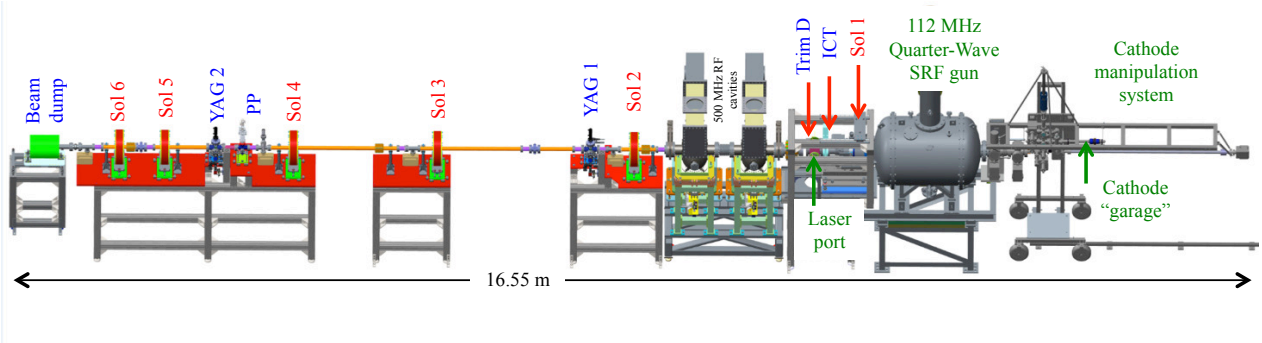

Figure 2: Phase I of the CeC PoP linac installation.

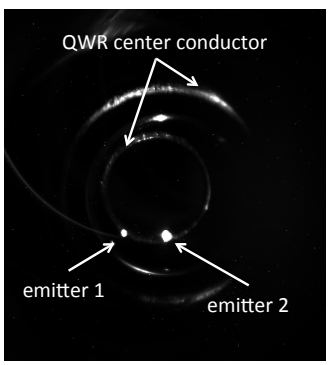

Figure 3: Two active field emitters inside the QWR center conductor.

The gun operates at 4.3 K with liquid helium supplied from a quiet helium source [9], which isolates the 112 MHz cryomodule from noise coming from the RHIC magnet helium supply line and the local helium compressor that processes the boil-off. We started conditioning without a photocathode puck. Initially, numerous multipacting zones were encountered at very low cavity voltages. They have been cleaned out after several days of conditioning and never presented a problem afterwards.

Further conditioning was easier, although we have found more multipacting inside the cavity, fundamental RF power coupler (FPC) and cathode stalk as described elsewhere [10]. Eventually the gun reached the voltage level where its performance was limited by field emission (FE). High power pulsed processing allowed us to proceed further and the gun has reached stable operation in CW mode at 1.3 MV, limited by a very high cryogenic load due to FE. A cavity voltage as high as 1.8 MV could be reached in pulsed mode [8]. Figure 3 is a photo of two active emitters taken during the cavity conditioning with a camera. An outline of the center conductor can be seen in the photo.

Upon installation of a cathode puck with active (with quantum efficiency QE = 2.75%) photoemission layer of CsK_2Sb, we observed very strong multipacting barriers. Intense studies showed that these new barriers are associated with presence of CsK_2Sb on the sides of the cathode puck. Attempts to overcome multipacting were not successful and we decided to use UV-laser cleaning to remove CsK_2Sb material from the cathode sides. The process of laser cleaning generated pressure spikes resulting in complete extinction of QE from the cathode front surface. Fortunately, baking the cathode at an elevated temperature partially restored its QE to 0.3% level. In the meantime, we have applied helium conditioning to the cavity, which allowed us to reduce the FE dark current and improve the cavity performance to 1.7 MV in CW and 2 MV in pulsed mode.

OPERATION WITH FIRST BEAM [6]

The first beam test of the SRF gun was commenced with a temporary laser operating at a repetition rate of 5 kHz. After insertion of a laser-cleaned cathode puck, we were able to immediately establish 1.56 MV CW operation. The laser phase relative to RF was scanned and photo-emitted electron bunches were observed using an integrating current transformer (ICT) [11] installed at the exit of the SRF gun (see Figure 1). Measure QE of ~0.8% is in good agreement with our expectations. With the initial laser spot size at the photocathode of ~1.5 mm FWHM (~0.7 mm RMS), we observed saturation of the extracted charge per bunch at 1.35 nC. We explain this saturation by part of the bunch profile reaching the critical density defined by accelerated filed at the cathode. By enlarging the laser spot size at the cathode to ~2.5 mm, we have increased the maximum generated bunch charge to just above 3 nC. Operating at 5 kHz repetition rate, we generated an average beam current of more than 15 μA. We also increased the energy of the electron beam to 1.7 MeV. Fig. 4 shows an example of oscilloscope traces obtained from the ICT signal.

Attempt to steer the beam to the first YAG screen was not successful – we could observe only a sliver of the beam at nearly maximum settings of trim dipoles, which indicated an obstacle. Meanwhile, we steered the beam into the wall, which caused a very strong multipacting in the fundamental power coupler area at ~40 kV. Conditioning to operational voltage caused a lot of vacuum activity and when the 1.7 MV level was re-established, the cathode QE dropped six-fold. Further attempts to propagate the beam to the first viewer screen were not successful, while the cathode emissivity deteriorated to about 10 pC per pulse.

Pre-Press Release - Copyright © 2015 CC-BY-3.0 and by the respective authors

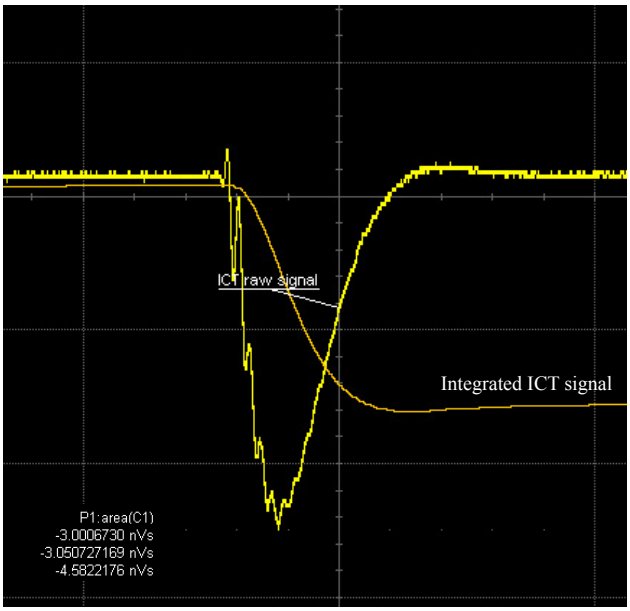

Figure 4: Oscilloscope trace of a raw signal from ICT and its integral. The ICT calibration is 0.8 nC per 1 nVs voltage integral. The integrated signal corresponds to bunch charge of 2.4 nC.

During tunnel inspection it was found that one of the ion pumps has very strong, ~200 G, stray magnetic filed at the beam pipe. The offending magnet was removed. Unfortunately, we did not have a good cathode to replace the spent one so further measurements were performed using dark current. A vertical trim coil in Trim D (see Figure 1) was used to measure the beam momentum and to calibrate its energy and SRF gun accelerating voltage. The YAG1 screen was used to measure the beam position. The measured momentum of the beam is 2.02±0.02 MeV/c, corresponding to the kinetic energy of 1.573 MeV (total energy 2.084 MeV) and the SRF gun accelerating voltage of 1.612 MV. Using this measurements as calibration, we determined that generated photo-emitted electron beam had kinetic energies between 1.6 and 1.7 MeV according to the logged RF pick-up data.

CONCLUSION

The 112 MHz quarter-wave SRF gun was successfully installed and commissioned in the RHIC tunnel. While still limited by field emission at its highest voltage (1.7 MV in CW, 2 MV in pulsed mode), the gun was able to generate a record-high bunch charge of 3 nC from a CsK_2Sb photocathode. At a repetition rate of 5 kHz, the beam current was about 15 μA. During current RHIC shutdown we work on improving reliability and operation of some sub-systems of the SRF gun, the cathode manipulation system in particular. More helium conditioning of the gun cavity is planned to reduce its field emission further. After the RHIC operation resumes in January of 2016, the SRF gun beam testing will continue.

REFERENCES

[1] S. Belomestnykh et al., "Superconducting 112 MHz QWR electron gun," *Proc. SRF'2011*, p. 223.
[2] S. Belomestnykh et al., "Developing of superconducting RF guns at BNL," *Proc. LINAC'2012*, p. 324.
[3] J. C. Brutus et al., "Mechanical design of 112 MHz SRF gun FPC for CeC PoP experiment," *Proc. NA-PAC'2013*, p. 802.
[4] V. N. Litvinenko and Y. S. Derbenev, *Phys. Rev. Lett.* **102**, 114801 (2009).
[5] I. Pinayev et al., "Present status of coherent electron cooling proof-of-principle experiment," *Proc. FEL'2014*, p. 524.
[6] I. Pinayev et al., "First Results of the SRF Gun Test for CeC PoP Experiment," *Proc. FEL'2015*.
[7] I. Pinayev et al., "First operation of a high-gradient high-charge 112 MHz CW superconducting RF gun with CsK_2Sb photocathode," in preparation.
[8] S. Belomestnykh et al., "Commissioning of the 112 MHz SRF gun and 500 MHz bunching cavities for the CeC PoP linac," *Proc. IPAC'2015*, p. 3597.
[9] Y. Huang et al., "Cryogenic systems for proof of the principle experiment of coherent electron cooling at RHIC," *AIP Conf. Proc.* **1573**, 1325 (2014).
[10] T. Xin et al., "Experimental and simulation result of multipactors in 112 MHz QWR injector," *Proc. IPAC'2015*, p. 1938.
[11] Integrated current transformer, Bergoz, http://www.bergoz.com

Pre-Press Release - Copyright © 2015 CC-BY-3.0 and by the respective authors

ISBN 978-3-95450-178-6