BNL-112437-2016-CP

Heat transfer analysis in a higher order mode waveguide for the electron-ion collider at BNL

D. K. Ravikumar, Y. Than, W. Xu, J. P. Longtin

4th International Workshop on Heat Transfer (IWHT2017)
Rio Hotel & Casino, Las Vegas, NV 89103
April 2 –5, 2017

October 2016

Collider-Accelerator Department

Brookhaven National Laboratory

U.S. Department of Energy
Office of Science, Office of Nuclear Physics

Notice: This manuscript has been authored by employees of Brookhaven Science Associates, LLC under Contract No. DE-SC0012704 with the U.S. Department of Energy. The publisher by accepting the manuscript for publication acknowledges that the United States Government retains a non-exclusive, paid-up, irrevocable, world-wide license to publish or reproduce the published form of this manuscript, or allow others to do so, for United States Government purposes

DISCLAIMER

This report was prepared as an account of work sponsored by an agency of the United States Government. Neither the United States Government nor any agency thereof, nor any of their employees, nor any of their contractors, subcontractors, or their employees, makes any warranty, express or implied, or assumes any legal liability or responsibility for the accuracy, completeness, or any third party's use or the results of such use of any information, apparatus, product, or process disclosed, or represents that its use would not infringe privately owned rights. Reference herein to any specific commercial product, process, or service by trade name, trademark, manufacturer, or otherwise, does not necessarily constitute or imply its endorsement, recommendation, or favoring by the United States Government or any agency thereof or its contractors or subcontractors. The views and opinions of authors expressed herein do not necessarily state or reflect those of the United States Government or any agency thereof.

ASTFE American Society of Thermal and Fluids Engineers

Proceedings of the 2nd Thermal and Fluid Engineering Conference, TFEC2017
4th International Workshop on Heat Transfer, IWHT2017
April 2-5, 2017, Las Vegas, NV, USA

TFEC-IWHT2017-17964

HEAT TRANSFER ANALYSIS IN A HIGHER ORDER MODE WAVEGUIDE FOR THE ELECTRON – ION COLLIDER AT BNL

Dhananjay K. Ravikumar[1,2,3*], Yatming Than[1,3], Wencan Xu[1,3], Jon P. Longtin[2,3]

[1]Collider Accelerator Department – Brookhaven National Laboratory, Upton, NY 11973, USA
[2]Department of Mechanical Engineering – SUNY Stony Brook, NY 11790, USA
[3]Center for Accelerator Science and Education – SUNY Stony Brook, NY 11790, USA

ABSTRACT

A key component of the proposed Electron – Ion Collider (EIC) at Brookhaven National Laboratory (BNL) are the Superconducting Radio Frequency (SRF) cavities. SRF cavities are responsible for generating electric fields that oscillate at radio frequencies, which are used in accelerating charged particle beams. Charged particle beams have their own Electric Fields which upon interaction with the field in the RF cavity, generate Higher Order Modes (HOM) of EM oscillations which can be harmful if left unchecked. This HOM wave energy can be considerable and it is therefore not desirable to extract this energy at cryogenic temperatures due to the considerable increase in size of the cryogenic cooling system. HOM waveguides are used to divert this energy from the cold cavity, and is then damped/extracted at room temperature. The SRF cavities operate at 2K and the cryogenic system is typically engineered to provide heat intercept capability at 5K, 35K and additional temperature levels if required. From the thermal standpoint, HOM waveguides provide the unwanted link between room temperature and the cold end thus adding a static thermal load. The other contribution to the thermal load comes from the joule heating of the HOM waveguide due to the passing RF wave. The main aim of this study is to try and reduce the additional load at the 2K cold end and to optimize heat stations' location along the waveguide. . We use ANSYS mechanical to model the problem, with RF load being modelled with a false-convection boundary condition and present the results of our analysis in the following sections. The analysis helps us decide if this is a feasible design for a HOM waveguide from both the RF and thermal standpoints.

KEY WORDS: SRF cavities, Higher Order Modes, Waveguides, Thermal analysis, Joule heating, cryogenic, false-convection

1. INTRODUCTION

The Relativistic Heavy Ion Collider (RHIC) at BNL has been colliding beams of charged particles, mainly hadrons for the past 15 years, to study, among other things what lies at the heart of nuclear matter. The way it does this by creating a huge energy density out of the momentum of accelerated beams of charged particles and then taking snapshots of the events that unfold through its detectors. In recent years, there has been a proposal to upgrade this into an electron – ion collider (eRHIC) [1] which will, instead of colliding two beams of hadrons, collide a beam of hadrons and a beam of electrons. This will be the first machine of its kind operating in this energy regime and thus has unprecedented design and engineering challenges.

The current design for eRHIC includes a Linear Accelerator (LinAc) to accelerate the electron beam. A schematic of the current layout is show in Fig. 1. The LinAc plans to use SRF cavities. The cavities are made of Niobium, which becomes superconducting at a transition temperature T_c = 9.3K. However, there is a need to maintain operating temperatures much below T_c in order to operate at as high a field as possible and to minimize Joule heating on the cavity' surface. Liquid Helium is used to cool the cavity to these temperatures. The critical point for Helium is 5.2 K at 227 kPa pressure. Many systems operate at boiling point of 4.5K, 130 kPa. However at this temperature, the pressure fluctuations from the boiling Helium

*Corresponding Author: ravikumar@bnl.gov

provide a major contribution in detuning the SRF cavity from its resonant frequency. When Helium becomes a superfluid at around 2.17K, because of the extremely high thermal conductivity, evaporation of the fluid happens only at the surface of the fluid volume which means, heat transfer from the cavity surface to the liquid surface happens "silently" as opposed to the violent boiling at 4.2K. In order to improve efficiency of operation, the RF cavity sits in a superfluid helium volume, which is isolated as much as possible from the outside world by means of a cryostat, where pressures in between the superfluid volume and the cryostat walls are maintained at around 10^{-7} Torr thus eliminating heat transfer by conduction and convection and there is also reflective type insulation called Multi-Layer Insulation (MLI) to reduce thermal radiation loads. In addition to this there are thermal shields/stations which are actively cooled by cold gas flowing through them to intercept thermal loads from room temperatures to the cold end.

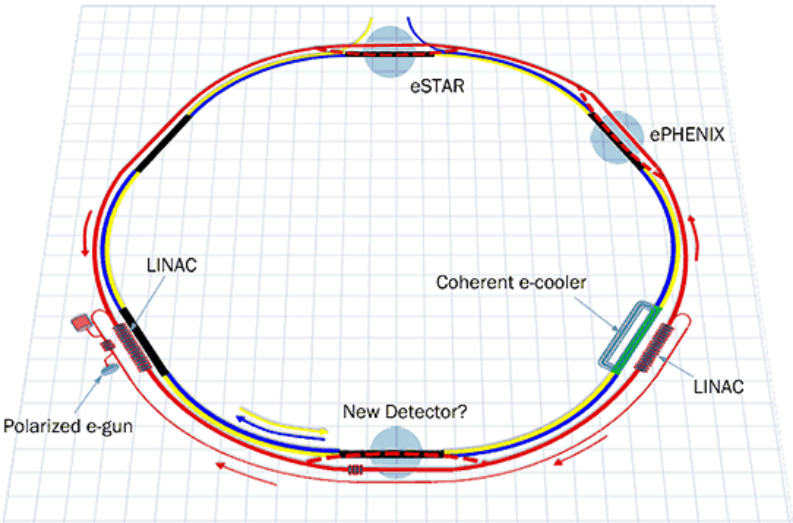

Fig. 1 Layout for eRHIC. Yellow and blue rings denote existing RHIC ring, red denotes electron ring
Source: https://www.bnl.gov/rhic/eic.asp

When charged particle beams at very high velocities pass through the SRF cavity, the electric field due to the moving charge creates image currents, which due to the non-smooth nature of the cavity, experience retardation and distortion and the wakefields that are created as a result act on the beam [2]. The wakefields combined with the non-zero resistance of the cavity material give rise to longitudinal components of the electric field which drains energy from the beam. These are what we call Higher Order Modes and to prevent these adverse effects from propagating downstream, it is of prime importance that this excess unwanted energy be removed.

Higher order modes have oscillation frequencies above the cavity's fundamental frequency of operation. The current cavity, show in Fig. 2 has a design frequency of 650 MHz, which is the fundamental mode. So a higher order mode waveguide must have a cut-off frequency higher than that of the fundamental mode to prevent it from leaking through the HOM Waveguide. The shape is thus chosen with this in mind, in addition to other constraints [3].

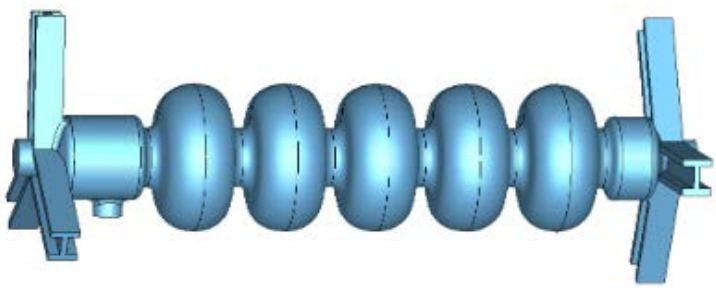

Fig. 2 Shows the HOM waveguides attached to each end of the 650 MHz SRF cavity

One end of the waveguide is attached to the cavity, which is maintained at a temperature of around 2K. The other however, extends to the outer jacket boundary of the cryostat which means that it provides direct thermal path between room temperature of around 300K and the 2K cold system which generates an addition heat leak. There are 6 of these attached to each cavity and there are 80 such cavities in the LinAc

2. PROBLEM DESCRIPTION

The shape of the waveguide is a double ridge, as show in Fig. 3. Warm end is located at the top and the cold end is at the bottom. The cold end is Niobium, which is the same material as the cavity and then there is a transition to stainless steel, joined together by two flanges, one for each material. The stainless steel is copper coated, because of better electrical performance, with a thickness of 20 µm and a Residual Resistance Ratio (RRR) of 50.

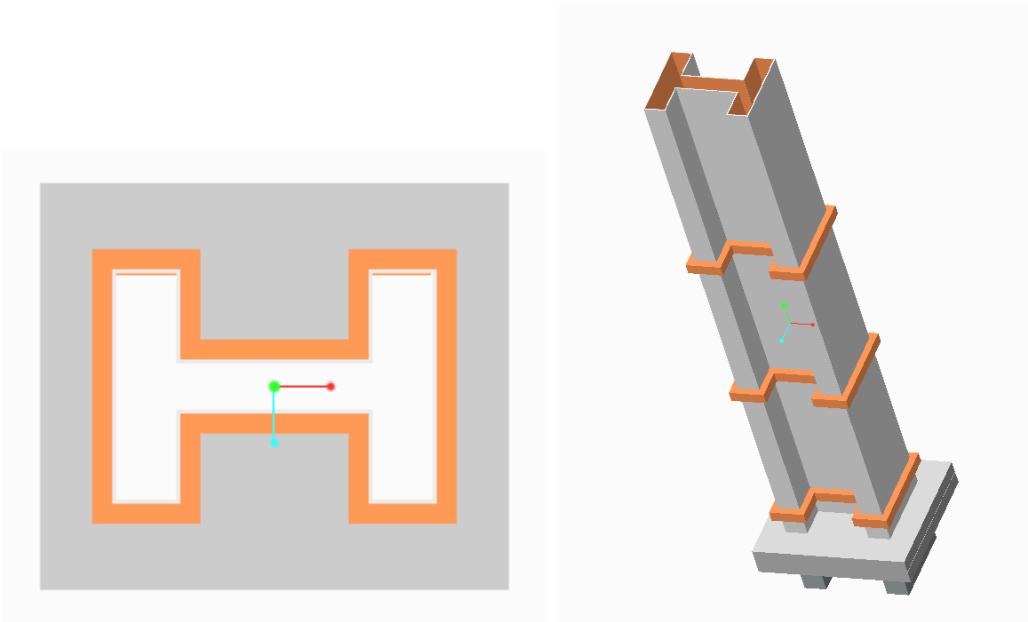

(a) (b)

Fig. 3 (a) shows the cross section of the waveguide and (b) shows the full length view

To minimize the heat leak into the 2K system, three thermal intercepts, made of high purity copper, with a RRR of 500 operating at different temperatures have been positioned to act as heat sinks. There will be thermal straps connecting these intercepts to their corresponding cold Helium pipes. The total length of the waveguide is 60 cm.

For the purpose of this analysis, the warm end at room temperature is set at 300K and the cold is set at 2K. This sets up heat flow along the length of the waveguide. The second dimension to heat flow arises because of additional boundary conditions on the intercepts, specified by the operating temperatures. This sets up the static thermal load case. Varying thermal conductivities as a function of temperature (k(T)) of Copper, Stainless Steel and Niobium have been taken into account with data from [4] [5] [6] .

The dynamic load, has been setup without the use of the ANSYS HFSS. This means, joule heating due to the RF loading has been calculated manually and then has been fed back to ANSYS mechanical by using a convection boundary condition, which we call a false-convection model. The electrical surface resistance of Cu varies with temperature thus the heat loads vary with variations in temperature. This has been replicated in our false-convection model by specifying the convection heat transfer coefficient ‘h’ as a function of temperature (h(T)). The heat dissipation from the RF field is calculated as

$$P = \int H^2 . R_s \, ds \quad (1)$$

Where, P is power dissipated, H is the magnetic field that induces currents in the metal and R_s is the surface resistance of the Cu. This power directly gives us Q/A which is heat flux. This can now be modelled as a convection heat transfer problem by using

$$Q/A = h(T-T_\infty) \quad (2)$$

Where, Q/A is heat flux, h is the convection heat transfer coefficient, T is the surface temperature of the Copper and T_∞ is a constant ambient temperature. Now for any given T_∞, a corresponding 'h' can be obtained that satisfies equation (2), which will be a function of T. This then is the false-convection model that will be employed to model the dynamic load from RF heating.

To improve computational efficiency, the thickness of the Cu coating has been increased by a factor of 10. To maintain the static thermal load the same, the thermal conductivity of the RRR-50 Cu has been decreased correspondingly by a factor of 10.

3. RESULTS AND ANALYSIS

3.1 Static Load The static load problem has been solved first, to get an estimate of the heat loads and temperature distributions across the Cu, Stainless and Niobium bodies. A parametric study has also been done to fix intercept temperatures.

Table 1 Shows the heat load from each intercept with the corresponding boundary conditions. Heat in is positive, heat out is negative.

Boundary type	Boundary condition	Heat in/out
Warm end	300 K	12.32 W
Intercept	85 K	-10.00 W
Intercept	55 K	19.57 W
Intercept	9 K	-14.65 W
Cold end	2 K	-7.25 W

As can be seen from the table above, the intercept at 55K is adding heat into the system rather than taking out heat. So the heat load at the 2K end is 7.25 W which is enormous. The intercept temperature was changed from 55K to 25K and the analysis was performed again.

Table 2 Shows change in heat loads as a result of change in intercept temperature

Boundary type	Boundary condition	Heat in/out
Warm end	300 K	12.35 W
Intercept	85 K	-10.00 W
Intercept	25 K	7.95 W
Intercept	9 K	-8.70W
Cold end	2 K	-7.22 W

The changed intercept temperature means there is lesser heat flowing in compared to the previous case. Heat is still being added to the system and the load to the 2K system has not changed much. So, the third intercept temperature was dropped from 9K to 6.5K and in addition to this, the thermal conductivity of the Copper coating was changed to match the value for RRR50 whereas the previous cases used high purity Copper for the coating.

Table 3 Shows change in heat loads with change in intercept temperature to 6.5K

Boundary type	Boundary condition	Heat in/out
Warm end	300 K	12.17 W

Intercept	85K	-7.55 W
Intercept	25K	-3.15 W
Intercept	6.5K	-0.94W
Cold end	2K	-0.53 W

This changes heat loads considerably, and are very close to values obtained from a simple 1D analytical calculation.

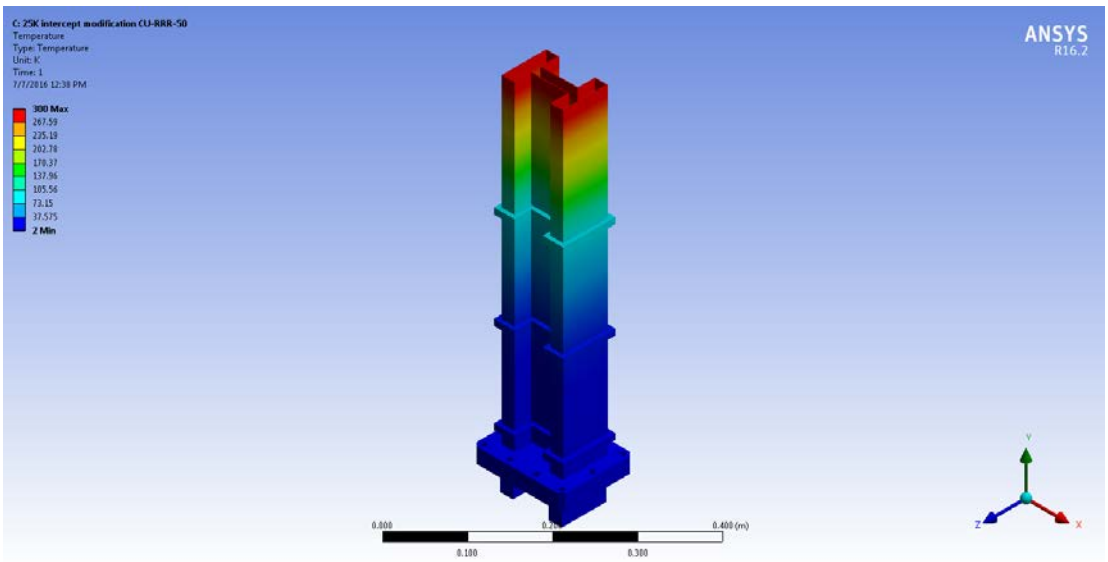

Fig. 4 Temperature distribution along the length of the waveguide

The thermal conductivity of Copper starts increasing with decreasing temperatures with significant changes below the 100K region as is shown in Fig. 6. Conductivity peaks at 26 K and then starts dropping with decreasing temperature. Comparison with Fig 5. Sees this effect manifested as the magnitude of heat flux in the Copper starts rising with drop in temperatures in each section between the intercepts.

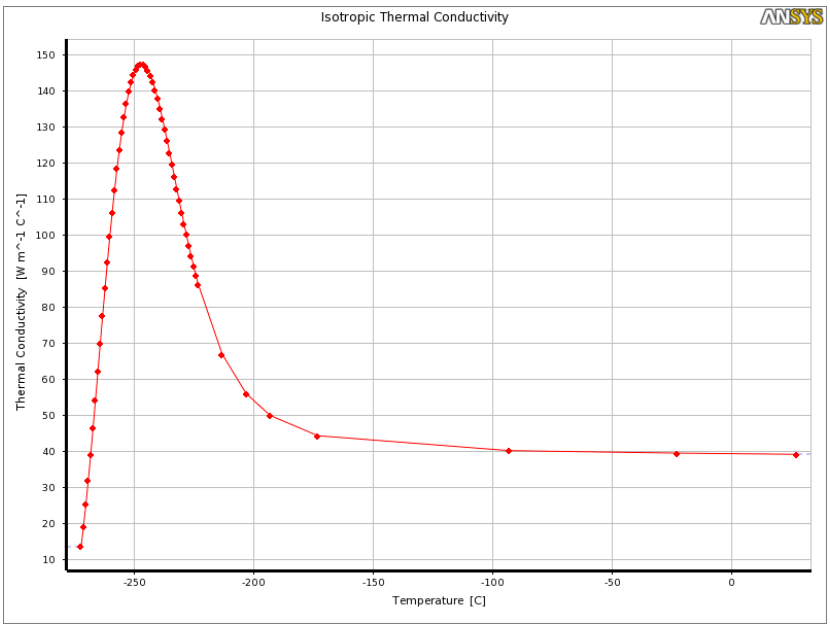

Fig 5. Change in thermal conductivity of RRR50 Cu with temperature.

Stainless steel, being an alloy does not have a similar variation in k (T) but rather drops with temperature, as presented in the plot below.

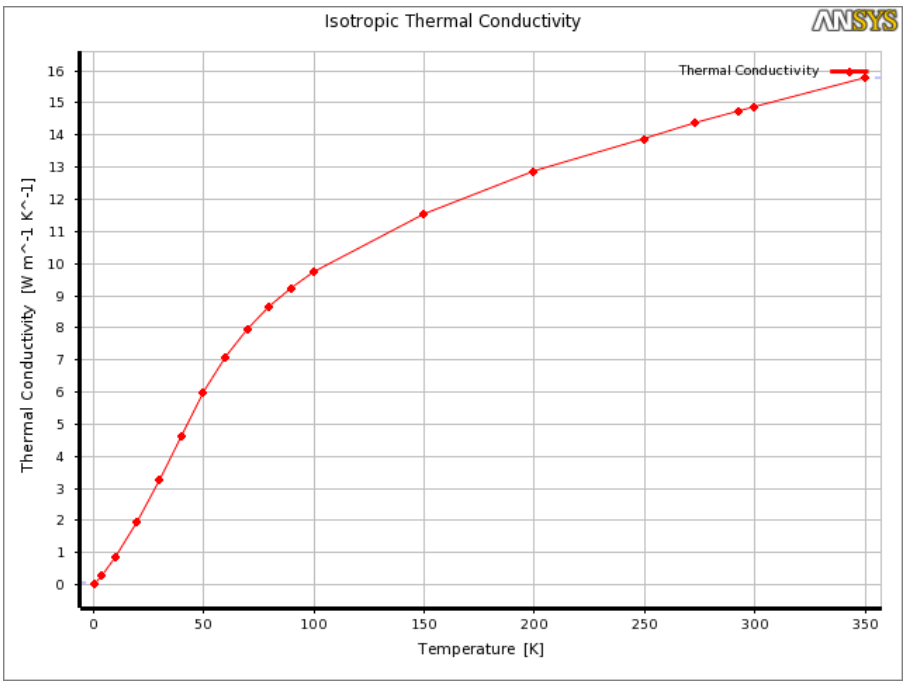

Fig. 6 Change in Thermal conductivity of SS 304 with temperature

These non-linear changes in the thermal conductivity of Copper and Stainless Steel is reflected in the plot of the heat flux vectors as shown in Fig. 5

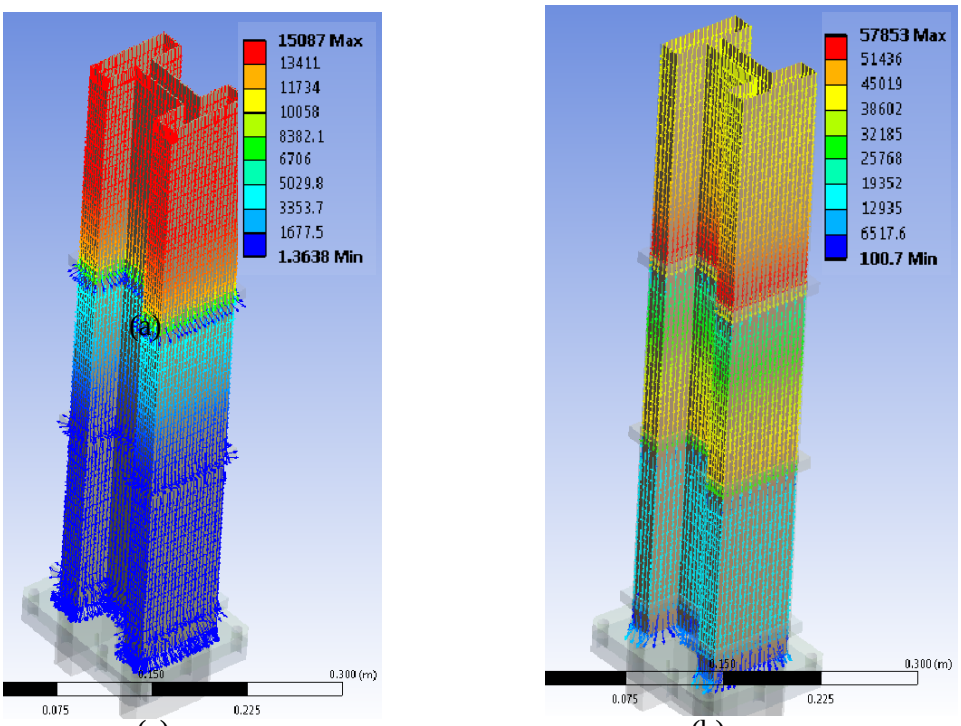

(a) (b)

Fig. 5 (a) showing plot of heat flux vectors along the Stainless steel volume and (b) showing heat flux vectors on the copper coating

Thus the magnitude of heat flux vectors drop with decreasing temperatures in Stainless Steel. Though the thickness of the Copper coating is small compared to that of the Stainless steel, the heat loads carried by both of them are similar because of the much higher thermal conductivity of Copper.

The static load analysis has thus provided us with a temperature distribution along the length of the waveguide, allowed us to perform a parametric study to obtain the right location and corresponding temperatures for proper operation of the intercepts and has allowed us to validate the numerical model with an analytical calculation.

3.2 Dynamic Load The dynamic load has been modelled using the false-convection model explained in the previous section. The fundamental mode decays exponentially in the waveguide and makes a large contribution to the RF heating. As a test for the false convection model, a uniform field strength of 100 A/m was used and corresponding heating loads were calculated. The problem now has an additional nonlinear aspect because of the changing surface resistance of Copper as a function of temperature. This effect has been outlined in the plot shown in Fig 8.

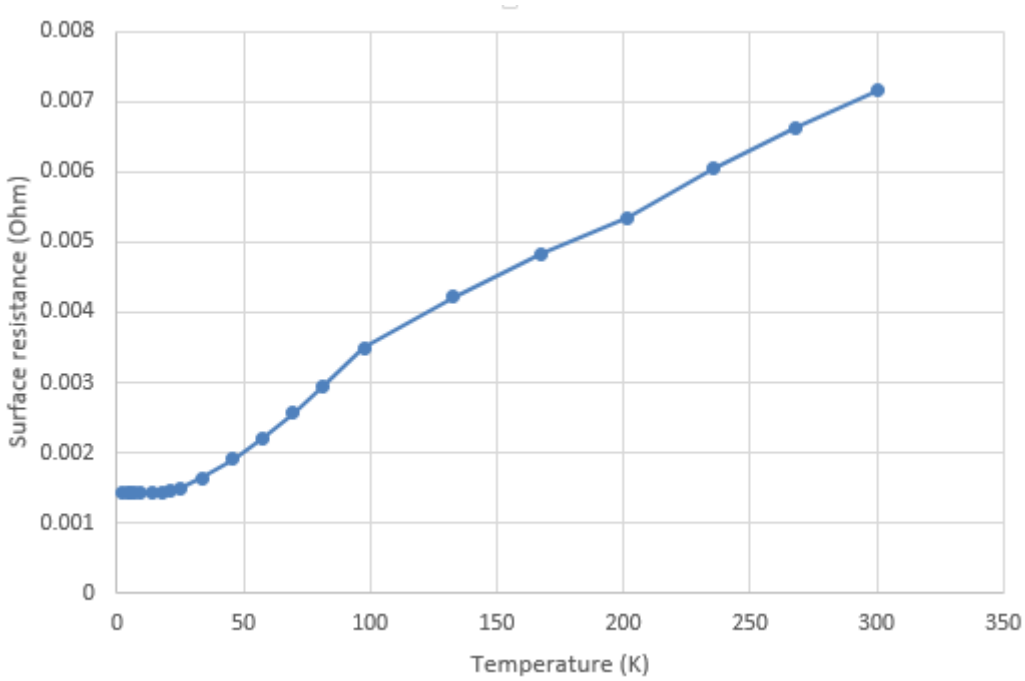

Fig. 8 Plot showing change in surface resistance of copper with change in Temperature

Table 4 Show heat load changes due to RF heating with a constant field strength of 100 A/m

Boundary type	Boundary condition	Heat in/out
Warm end	300 K	9.94 W
Intercept	85 K	-6.97 W
Intercept	25 K	-2.56 W
Intercept	6.5 K	-0.74 W
Cold end	2 K	-4.17 W
Copper surface	False-convection	4.50 W

The heat load contribution from the RF wave is much higher than the actual expected, at about 50% of the static load but this is because a conservative constant field strength value was used. Temperature probes were then inserted at particular locations along the waveguide. RF field strength at these location were calculated

and thus, the change in the RF field was noted with the temperatures at the corresponding location. These were then used to model the exponential decay of the fundamental mode within the waveguide.

Table 5 Heat loads from exponentially decaying field strength.

Boundary type	Boundary condition	Heat in/out
Warm end	300K	13.56 W
Intercept	85K	-7.3 W
Intercept	25K	-3.6 W
Intercept	6.5K	-0.8 W
Cold end	2K	-1.4 W
Copper surface	False-convection	0.03 W

This shows that the heat load from the decaying H field is only 0.03 W. This can also be attributed to the fact that the thermal conductivity in the x and z directions have still not been compensated for the increase in thickness, which would affect heat flow caused by the false-convection boundary condition. A uniform RF field value has been assumed along the cross section of the waveguide. Complications arise due to the geometry in modelling asymmetries in the direction of the cross section. This is justified by the fact that the RF loading is very small compared to the static load. The inclusion of RF loads however changes the temperature profiles in the y direction which in turn changes the value of Cu surface resistance thus changing the value of Joule heating on the Cu surface. Convergence in this regard is achieved manually by retaking data from the same probes and recalculating heat loads and 'h' and then using this again to observe changes in temperature if any.

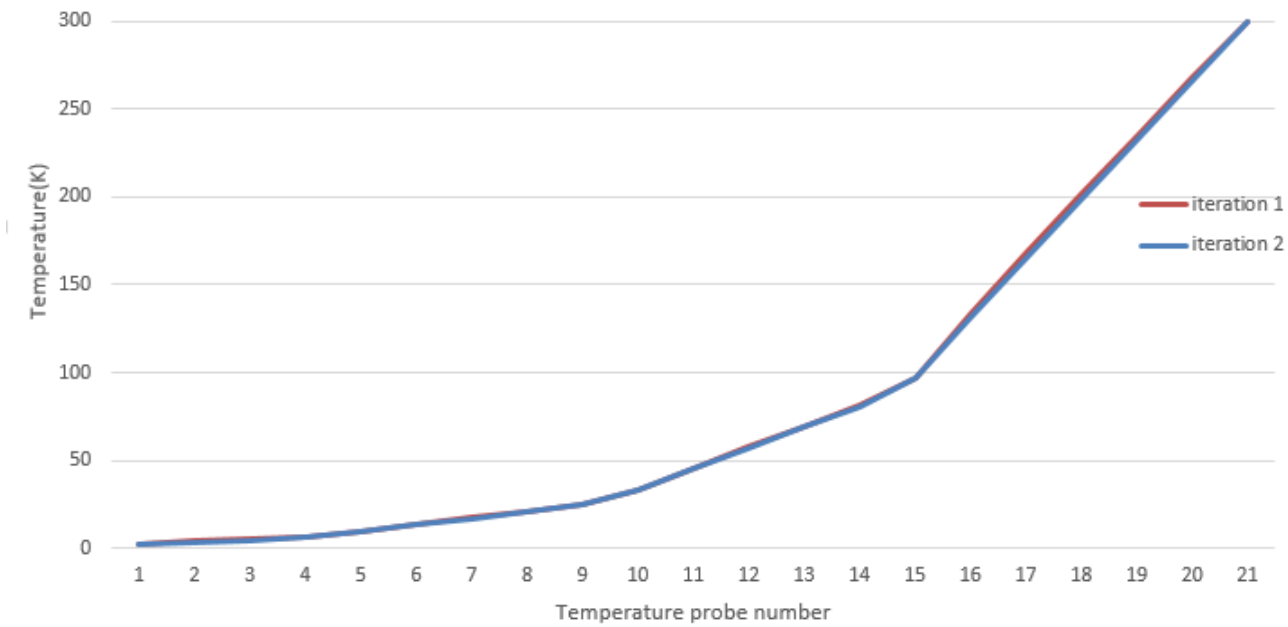

Fig. 9 Plot showing temperatures from two successive iterations.

From Fig. 9, it is seen that temperature values at the same locations agree to within a reasonable margin of error.

6. CONCLUSIONS

The heat transfer through the waveguide has been modelled, with a successful parametric study providing us with proper locations and temperatures for the thermal intercepts. The heat contribution from the dynamic load has been modelled and its effect on the heat load has been noted to be minimal compared to the static

load. Future work would include validation of this model using a different solver and to try and incorporate the effect of radiation within the waveguide and to also implement orthotropic changes in thermal conductivity.

REFERENCES

[1] Aschenauer, E.C. et al "eRHIC design study: An Electron-Ion Collider at BNL," *arxiv: 1409.1633* **Web document**

[2] Holzer, B.J. "*Higher – order modes and heating,"* arxiv: 1501.07013 **Web document**

[3] Xu, W., et al "*Ridge waveguide HOM damping scheme for high current SRF cavity,"* Proceedings of IPAC2016, Busan, Korea, pp. 2367 - 2369 Conference **Proceedings**

[4] Ho, C.Y., and Chu, T.K., "*Electrical resistivity and Thermal conductivity of nine selected AISI stainless steels"*, 06/16/2016, from http://www.inductor-jmag.ru/files/content/a129160.pdf **Webpages: Nonperiodical Web Document**

[5] Ho, C.Y., Powell, R.W., & Liley, P.E., "*Thermal conductivity of the Elements", 06/16/2016, from http://nist.gov/data/PDFfiles/jpcrd7.pdf* **Webpages: Nonperiodical Web Document**

[6] NIST cryogenic database, 06/16/2016 from http://cryogenics.boulder.nist.gov/MPropsMAY/OFHC%20Copper/OFHC_Copper_rev1.htm **Webpages: Nonperiodical web document**