BNL-78058-2007-JA

Development of TQC01, a 90 mm Nb_3Sn Model Quadrupole for LHC Upgrade Based on SS Collar

R.C. Bossert, G. Ambrosio, N. Andreev, E. Barzi, S. Caspi, D.R. Dietderich, P. Ferracin, A. Ghosh, S.A. Gourlay, A.R. Hafalia, C.R. Hannaford, V.S. Kashikhin, V.V. Kashikhin, A.F. Lietzke, S. Mattafirri, A.D. McInturff, I. Novitski, G.L. Sabbi, D. Turrioni, G. Whitson, R. Yamada, A.V. Zlobin

Accepted for Publication in IEEE Transaction on Applied Superconductivity (2006)

June 5, 2007

Superconducting Magnet Division

Brookhaven National Laboratory
P.O. Box 5000
Upton, NY 11973-5000
www.bnl.gov

Notice: This manuscript has been authored by employees of Brookhaven Science Associates, LLC under Contract No. DE-AC02-98CH10886 with the U.S. Department of Energy. The publisher by accepting the manuscript for publication acknowledges that the United States Government retains a non-exclusive, paid-up, irrevocable, world-wide license to publish or reproduce the published form of this manuscript, or allow others to do so, for United States Government purposes.

DISCLAIMER

This report was prepared as an account of work sponsored by an agency of the United States Government. Neither the United States Government nor any agency thereof, nor any of their employees, nor any of their contractors, subcontractors, or their employees, makes any warranty, express or implied, or assumes any legal liability or responsibility for the accuracy, completeness, or any third party's use or the results of such use of any information, apparatus, product, or process disclosed, or represents that its use would not infringe privately owned rights. Reference herein to any specific commercial product, process, or service by trade name, trademark, manufacturer, or otherwise, does not necessarily constitute or imply its endorsement, recommendation, or favoring by the United States Government or any agency thereof or its contractors or subcontractors. The views and opinions of authors expressed herein do not necessarily state or reflect those of the United States Government or any agency thereof.

Printed on recycled paper

Development of TQC01, a 90 mm Nb_3 Sn Model Quadrupole for LHC Upgrade Based on SS Collar

R. C. Bossert, G. Ambrosio, N. Andreev, E. Barzi, S. Caspi, D. R. Dietderich, P. Ferracin, A. Ghosh, S. A. Gourlay, A. R. Hafalia, C. R. Hannaford, V. S. Kashikhin, V. V. Kashikhin, A. F. Lietzke, S. Mattafirri, A. D. McInturff, I. Novitski, G. L. Sabbi, D. Turrioni, G. Whitson, R. Yamada, and A. V. Zlobin

***Abstract*—As a first step toward the development of a large-aperture Nb_3Sn superconducting quadrupole for the Large Hadron Collider (LHC) luminosity upgrade, two-layer technological quadrupole models (TQS01 at LBNL and TQC01 at Fermilab) are being constructed within the framework of the US LHC Accelerator Research Program (LARP). Both models use the same coil design, but have different coil support structures. This paper describes the TQC01 design, fabrication technology and summarizes its main parameters.**

***Index Terms*—Collars, LARP, LHC IR, Nb_3Sn, quadrupole magnet, skin, yoke.**

I. Introduction

An IMPORTANT objective of the US LHC Accelerator Research Program (LARP) is to develop a Nb_3Sn quadrupole for an eventual LHC upgrade [1]. US labs (FNAL, BNL and LBL) are collaborating to build and test the initial short models. Two different structures, using the same two-layer, 90 mm aperture shell type epoxy impregnated coil design, are being pursued. The TQS01 structure was developed and tested on a dummy coil at LBNL. In this approach, coils are assembled and reacted against an outer aluminum shell using keys and bladders [2]. A short quadrupole model TQC01 based on stainless steel collars supported by an iron yoke and thick SS skin is being developed at Fermilab. A short 0.3 m long mechanical model is being fabricated and tested to verify the results of the mechanical analysis. The model is instrumented with strain gauges installed on its main components. Stress distribution is monitored during model assembly at room temperature and after cooling down to liquid nitrogen temperature. This paper describes the TQC01 design, fabrication technology and summarizes its main parameters. Initial coil fabrication experience is reported. ANSYS 2D calculations and measurements on a mechanical model are shown.

Manuscript received September 20, 2005. This work was supported by the Director, Office of Energy Research, Office of High Energy and Nuclear Physics, High Energy Physics Division, U. S. Department of Energy, under Contract DE-AC02-05CH11231.

R. Bossert, G. Ambrosio, N. Andreev, E. Barzi, V. S. Kashikhin, V. V. Kashikhin, I. Novitsky, D. Turrioni, G. Whitson, R. Yamada, and A. V. Zlobin are with Fermilab National Accelerator Laboratory, Batavia, IL 60510-0500 USA (e-mail: bossert@fnal.gov.

S. Caspi, D. R. Dietderich, P. Ferracin, S. A. Gourlay, A. R. Hafalia, C. R. Hannaford, A. F. Lietzke, S. Mattafirri, A. D. McInturff, and G. L. Sabbi are with Lawrence Berkeley National Lab, Berkeley, CA 94720 USA.

A. Ghosh is with Brookhaven National Laboratory, Upton, NY 11973 USA.

Digital Object Identifier 10.1109/TASC.2006.871320

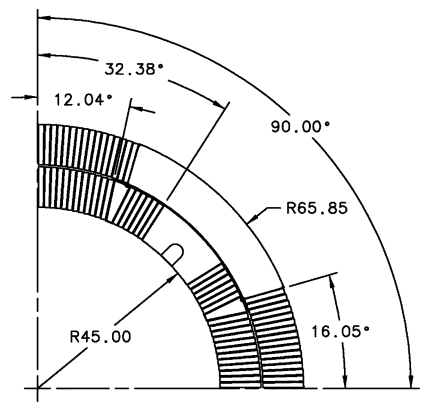

Fig. 1. TQ magnet coil cross section.

TABLE I
TQ Specifications

Parameter	Unit	TQC01
Number of layers		2
Number of turns		136
Coil area (Cu + non Cu)	cm^2	29.33
Assumed non-Cu Jc at 12T, 4.2K	kA/mm2	2.0
Quench Gradient 4.2K/1.9K	T/m	215.6/233.1
Quench Current 4.2K/1.9K	kA	12.94/14.07
Peak field in the coil at quench 4.2K/1.9K	T	11.2/12.1

II. Magnet Design and Analysis

A. Cable and Cross Section

The TQ coil design consists of a 2-layer $\cos -2\theta$ configuration with a 90 mm bore and one wedge in the inner layer (Fig. 1). The cable design was developed in collaboration with BNL and LBNL [3]. It is made of 27 strands each .7 mm in dia., with a nominal keystone angle of 1.0 degrees, width of 10.05 mm and mid-thickness of 1.26 mm. Cable for the first set of TQ magnets will be made from MJR strand that is currently available in quantities sufficient for two short models. Subsequent magnets will use RRP strand currently under development with higher J_c [3]. TQC01 specifications are shown in Table I.

B. Structure

The TQC mechanical structure is shown in Fig. 2. It is based on the structure of the MQXB quadrupoles built at Fermilab for the LHC interaction region [4]. MQXB collars are used, with inner layer poles removed and outer layer poles retained for coil

1051-8223/$20.00 © 2006 IEEE

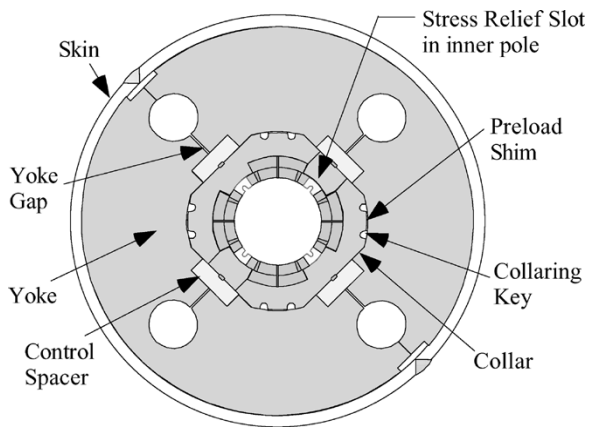

Fig. 2. TQC mechanical structure.

Fig. 3. TQC collar lamination after (left) and before modifications.

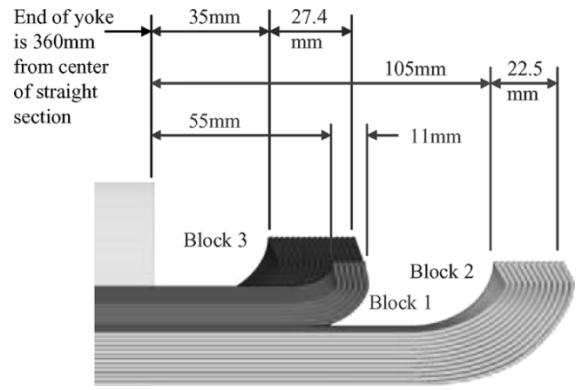

Fig. 4. End block positions.

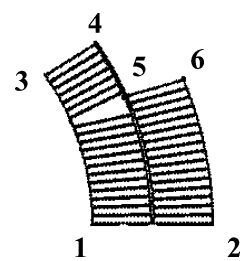

Fig. 5. Key stress points within cross section.

alignment. Fig. 3 shows LHC IR quad collar laminations before and after modification for the TQ structure.

Coil preload and support against Lorentz forces is provided by a combination of collar and yoke support. Collars are held together with trapezoidal shaped collaring keys. Four preload shims are placed radially at the midplane to control coil-yoke interference. Although iron yoke laminations and 12 mm thick stainless steel skins are two-piece, the yoke laminations are cut radially from the collar outside surface to provide "quadrupole-symmetrical" loading. These cuts extend from the outer collar surface to a round opening in the yoke and are shown as "yoke gaps" in Fig. 2. Control spacers limit the yoke compression of the collars, preventing over-compression of the coils and increasing the radial rigidity of the structure. A "stress relief slot", shown in Fig. 2, is added to TQC inner coil poles (not used in TQS), which allows the bronze pole section to deflect slightly when loaded, reducing the maximum azimuthal stress at the coil pole turns.

C. Analysis

LBNL and FNAL collaborated on the magnetic analysis of the coil ends. Fig. 4 shows the position of end turns in the final design (nonlead end shown). The peak field in the straight section of TQC01 (calculated at 13 kA) is 11.1 T. The peak field in the ends is 8.9 T in the inner coil (block 1) and 10.6 T in the outer coil (block 3). These values are slightly different than those of TQS01 due to different yoke configurations.

A preliminary 2D mechanical analysis of preloads within the TQC01 structure has been completed. Design goal is to maintain an azimuthal preload between coil and structure at the poles during excitation. Fig. 5 shows a map of key positions within the coil cross section. Azimuthal prestress in the coils reaches 100 MPa during construction, when the collars are compressed, just before insertion of the keys, at point 3. It decreases after the keys are inserted and hydraulic press load is released, before increasing to 140 MPa during skin welding. Table II lists the peak stress in the coil and magnet structural components at 300 K, 4.2 K and $\mathrm{Bmax} = 233\ \mathrm{T/m}$ at 1.9 K. The skin thickness used in the model was 8 mm. Table II shows the skin stresses to be near the yield strength of the skin material. The skin thickness has been changed to 12 mm, which will give a 50% margin.

TABLE II
STRESSES IN TQC01 COILS AND COMPONENTS (MPA)

	Peak Coil Stress	At Coil Pos. No.	Pole insert	Control Spacer	Collar	Yoke	Skin (Avg)
300K	140	3	250	50	420	170	230
4.2K	150	3	230	80	470	270	400
Bmax	145	2	5	50	460	280	450

III. MAGNET CONSTRUCTION

A. Procedure

The cable is fabricated and insulated at LBNL. It is annealed at 200°C for 4 hours during manufacturing before the final re-rolling to reduce its thickness by 30–60 μm. It is then insulated with a 125 μm thick sleeve made of S-2 fiberglass.

All coil end parts are water jet cut from aluminum-bronze tubes. Part shapes are designed according to a geometry generated from the program BEND [5]. Each coil pair (inner and outer layer) is wound from a single length of cable without an inter-layer splice. The inner coil (layer 1) is wound first, cured, and covered with a sheet of 250 μm thick ceramic. The outer coil is wound on top of the inner, and both are cured together. Inner coil is therefore cured twice. Curing is done at 150°C for

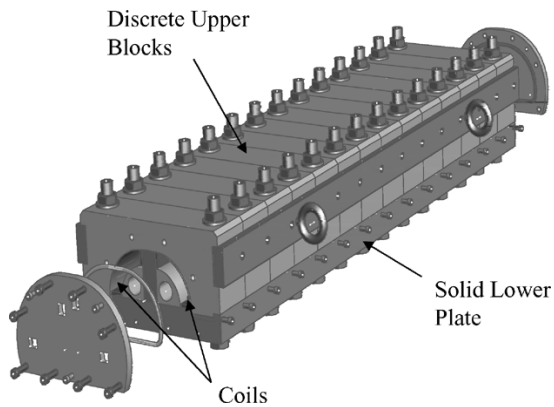

Fig. 6. TQ reaction/impregnation tooling.

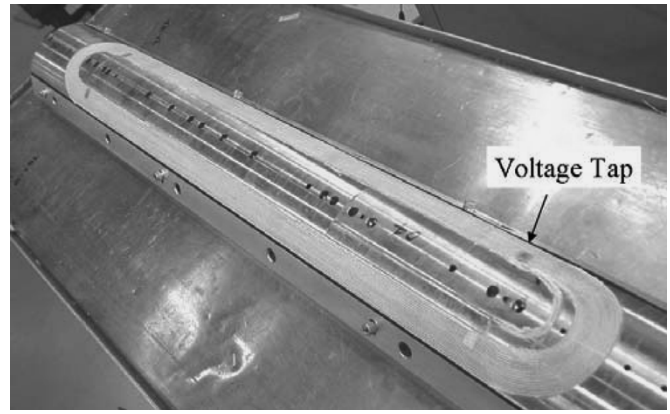

Fig. 7. TQ practice coil.

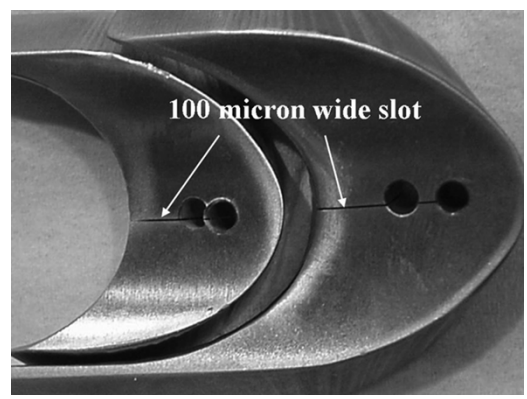

Fig. 8. Slots in end parts.

1/2 hour in a closed cavity mold with an applied azimuthal pressure of 35 MPa. A ceramic binder is applied to the coil surface just before curing [6]. During curing, coil ends are confined but no extra pressure is applied. After curing, mechanical and electrical measurements are taken.

After two coil pairs are produced, reaction is done in another closed cavity fixture (Fig. 6). To avoid damage at reaction temperatures, the coil size is set during curing so that the maximum azimuthal pressure during reaction is 5 MPa. The current target reaction cycle for the MJR cable used in TQC01 is 210 C for 48 hours, followed by 400 C for 48 hours, followed by 640 C for 48 hours [3].

Splicing of the NbTi leads and impregnation is done in a steel fixture identical to the one used for reaction. Coils are impregnated with CTD101 epoxy, under vacuum, at 60°C. The inner coil mandrel is made of teflon in the case of TQC01, which expands during impregnation to minimize the epoxy thickness on the inside surface of the coil.

After impregnation, the coils are assembled and surrounded with ground insulation. Stainless steel laminated collars are placed around the coils and closed in a hydraulic press. Collaring keys are inserted gradually to avoid large stress/strain gradients between loaded and nonloaded areas, and press pressure is released. The yoke and skin are then placed around the collars, compressed, and the skin is welded. 50 mm thick end plates are installed, which include preload bolts to apply axial force to the coil ends. Specific end loading for TQC01 will be established based upon results of a 3D structural analysis and experience with recent Nb_3Sn magnets.

B. Construction Experience

To date, practice cable was fabricated at LBNL and four TQ practice coils (inner-outer pairs) have been wound and cured at Fermilab. Fig. 7 shows a cured practice coil. Voltage taps, consisting of small metal foil "flags" were installed in the outer coil. After reaction they will be attached to a Kapton sheet which has metal strips for voltage tap connections and quench protection heaters printed onto the surface facing the coil. Inner coil voltage taps are attached individually after impregnation.

No major difficulties were encountered during practice coil fabrication, but several areas requiring improvement were identified. Localized de-cabling occurred during winding of the outer coil pole turn. In order to improve stability, the cable tension was reduced from 160 N to 70 N while winding this turn, and a 1/2 turn twist was added to the cable as it leaves the tensioning device. Further optimization steps may be required to prevent de-cabling. Tooling to support the cable in the area where the pole turn of the inner coil enters the outer layer was redesigned and successfully implemented. Longitudinal slots (Fig. 8) were added to end parts to make them flexible enough to be placed onto the coil while still in its free state. The end parts are then compressed into their precise design shape during the curing process, with no gaps between turns and end parts.

In the first practice coil, these cuts were not applied. Instead, coil part surfaces were ground before winding to allow them to be placed onto the coil, as had been done with previous dipole coils. Gaps would then result after curing, which needed to be filled with a ceramic paste.

Azimuthal measurements at 8, 10, 15 and 20 MPa are shown in Fig. 9. Based on these measurements, the reaction mold can be shimmed to limit the azimuthal pressure during reaction to 5 MPa. The measurements can also be used to feed back information on coil size to adjust the curing mold size for future coils, allowing reaction and impregnation tooling cavities to be set to the nominal coil size. In the case of the TQ coils, the measurements indicate that no adjustments are currently necessary.

Practice coils 1–3 were wound with the same reel of cable, while coil 4 was wound with a different reel, possibly causing the smaller size of practice coil 4.

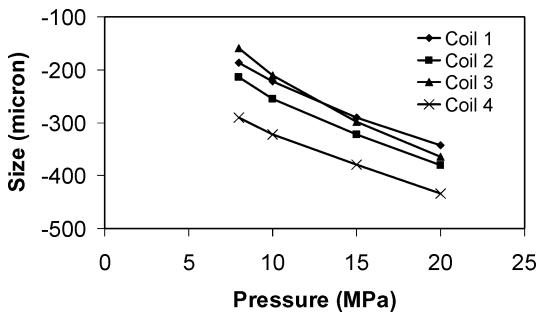

Fig. 9. Coil size measurements. Size shows per side vs. steel master of coil design size.

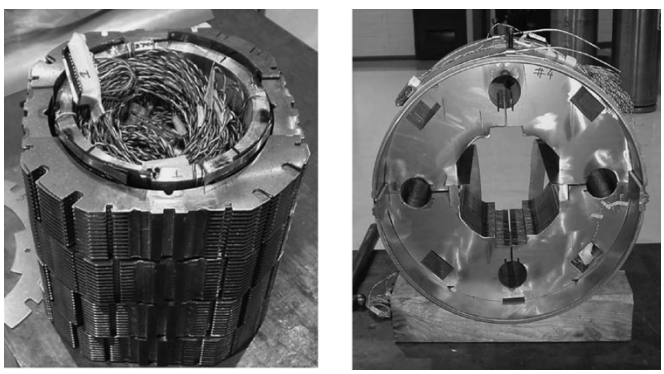

Fig. 10. Assembled mechanical model. Collared section shown at left and yoke without collars shown at right.

After curing, two of the practice coils were reacted and impregnated at FNAL, while the other two were sent to LBNL to further optimize the reaction and impregnation procedures that will be implemented on the TQ production coils.

IV. Mechanical Model

The first two practice coils reacted and impregnated at Fermilab will be cut at their longitudinal center and installed into a mechanical model. The model will be instrumented to measure preloads during construction and after assembly, warm and cold, with and without yoke.

A preliminary assembly of the model was made using "full round" collars as are used on magnet ends, with the center pole area completely removed, and an aluminum tube matched to the outer coil cross section, as shown in Figs. 10 and 11 [7]. Collar laminations are welded together into discrete packs each 40 mm long as can be seen in Fig. 10, and keyed using collaring keys of the same length. To understand stress distribution, gauges were mounted on the surface of the cylinder in both the azimuthal and longitudinal direction as shown in Fig. 11.

Initial data were taken using the collared section without the yoke, to understand details of the collaring process. The strain in the tube was measured while the collaring keys were inserted. Keys were inserted in steps, partially inserting the keys into one collar pack, then moving to the next section longitudinally. Once the entire length was keyed to a predetermined depth, the process was repeated until the keys were fully inserted. In each step, the keys were inserted by 3 mm. Prestress up to 120 MPa was achieved in the aluminum tube.

Fig. 11. Instrumented aluminum tube.

The azimuthal stress in the aluminum tube increased by approximately 10 MPa per mm of key depth. During the actual keying operation, the key depth in an individual step can be controlled to 1 mm. Consequently, the incremental stress between adjacent keyed and unkeyed collar packs can be controlled to within 10 MPa. In magnets with brittle Nb_3Sn conductor, it may be important to limit the incremental stress between adjacent keyed and un-keyed sections during the collaring process.

V. Summary

Two TQ style magnets (TQS01 and TQC01), with a 2-layer design are being constructed in collaboration by LBNL, FNAL and BNL. Both magnets have the same cable and coil cross section, but different mechanical structures. The collar and yoke structure will be implemented at Fermilab in TQC01, using a design similar to the first generation LHC IR quadrupoles. The magnetic analysis is done and the structural analysis is nearly complete. Practice coils have been successfully fabricated and reacted, with the impregnation currently taking place. A mechanical model will be tested with the two completed practice coils. TQC01 tests are planned for April of 2006.

Acknowledgment

The authors would like to thank J. Alvarez and L. Mokhov for their technical expertise during coil fabrication.

References

[1] S. A. Gourlay *et al.*, "Magnet R&D for the US LHC Accelerator Research Program (LARP)," presented at the 19th International Conference on Magnet Technology Genova, Italy, Sep. 18–23, 2005.

[2] S. Caspi *et al.*, "Design and construction of TQS01, a 90 mm Nb_3Sn quadrupole model for LHC luminosity upgrade based on a key and bladder structure," presented at the 19th International Conference on Magnet Technology Genova, Italy, Sep. 18–23, 2005.

[3] E. Barzi *et al.*, "Round and extracted strand tests for LARP magnet R&D," presented at the 19th International Conference on Magnet Technology Genova, Italy, Sep. 18–23, 2005.

[4] R. Bossert *et al.*, "Development of a high gradient quadrupole for the LHC interaction regions," *IEEE Trans. Appl. Supercond.*, vol. 7, no. 2, pp. 751–754, Jun. 1997.

[5] J. M. Cook, "Strain energy minimization in SSC magnet winding," *IEEE Trans. Magn.*, vol. 27, pp. 1976–1988, Mar. 1991.

[6] D. Chichili *et al.*, "Fabrication of shell-type Nb_3Sn dipole magnet at Fermilab," *IEEE Trans. Appl. Supercond.*, vol. 11, no. 1, pp. 2160–2163, Mar. 2001.

[7] G. Tavano, "TQ mechanical model initial results," Fermilab Technical Division Technical Memo TD-05-042..