BROOKHAVEN
NATIONAL LABORATORY

Superconducting Magnet Division

Magnet Note

Author: A. Ghosh

Date: December 20,2000

Topic No: 599-32 (AM-MD-300)

Topic: LHC

Title: Superconducting Wire and Cable Testing

NOTE: First version dated 1/28/98

M. Anerella
A. Blake (c)
J. Cozzolino
J. Escallier (c)
G. Ganetis
M. Garber (c)
A. Ghosh
R. Gupta
H. Hahn (c)
M. Harrison
J. Herrera
A. Jain
P. Joshi (c)
S. Kahn
W. Louie (c)
G. Morgan (c)
J. Muratore (c)
S. Ozaki (c)
B. Parker
S. Peggs
F. Pilat (c)
S. Plate (c)
C. Porretto (c)
W. Sampson (c)
J. Schmalzle (c)
J. Sondericker (c)
S. Tepikian (c)
R. Thomas (c)
D. Trbojevic (c)
P. Wanderer
J. Wei
T. Wild (c)
E. Willen

Superconducting Wire and Cable Testing

1. Overview
2. Scope of work
   a) Schedule of testing
   b) Frequency of testing
3. Facility Upgrade
   a) 1.9K Superfluid operation
   b) Power supply re-configuration
   c) Additional dipole magnets and test cryostats
   d) Cryogenic and Control Systems upgrade
4. Strand Test Procedure
5. Cable Test Procedure
6. Strand and Cable R&D
7. Summary

a

1. Overview

This chapter deals with the testing and evaluation of the superconducting cables and wires that are used in the main LHC dipoles and quadrupoles. It is expected that for the entire duration of the superconductor cable procurement by CERN for the LHC project, BNL will provide the resources to verify the superconducting properties of the cables. Collaboration in this area began in '95 and is scheduled to be completed in the calendar year 2004.

During this period the cable test facility at BNL will be used to measure the critical current, Ic,of LHC dipole and quadrupole cable samples in accordance with the cable specification requirements. The standard tests on production cables will be at 4.2K. However, approximately 10% of the cable samples will be tested in superfluid helium at 1.9K to determine the consistency of the AH shift of the Ic-H curve from 4.2K to 1.9K. In addition, critical currents of an equivalent number of wire samples will be conducted at 4.2K in the field range of 6-ST.

It is anticipated that the production phase of the conductor procurement will commence during calendar year 1999. Pre-selection of the strand and cable manufacturers as well as R&D on conductor will continue through 1998.

Table 1. lists the main characteristics of the LHC dipole Cables 1 and 2.[1] Note that some of the values in this table are modified from previous specifications.

Table 1.

	Cable 1	Cable 2
Cable Width	15.1 -0.02 +0 mm	15.1 -0.02 +0 mm
Cable mid-thickness at 50 MPa	1.90 ± 0.006mm	1.48± 0.006mm
Keystone angle	1.25± 0.05 degrees	0.90 ± 0.05 degrees
Cable thin edge thickness	1.736± 0.006mm	1.362± 0.006mm
Cable thick edge thickness	2.064 ± 0.006mm	1.598± 0.006mm
Cable edge radius	≥0.30mm	≥0.30mm
Cable transposition pitch	115± 5mm	100 ± 5mm
Number of superconducting strands	28	36
Minimum critical current at 1.9 K, with a field normal to broad face.	13750 A at 10 T	12960A at 9 T
Minimum critical current at 4.222 K, with a	14140 A at 7 T	13236 A at 6 T

[1] Conductor specification LHC-MMS/97-152 and LHC-MMS/97-153 (July'97)

field normal to broad face		
Minimum critical current at 1.9K of extracted strand	491 A at 10T	360 A at 9 T
Residual resistance ratio	≥70	≥70
Cable transposition direction	left-handed screw thread	left-handed screw thread
Minimum unit length *	460m	750m

In the near term, testing at BNL will include the following:
a). critical current measurements of cable and strand samples at 4.2 K to monitor pre-selection manufacture of LHC inner and outer cables as and when required by CERN.
b). R & D work on stability tests of LHC prototype cables and strands selected by CERN. Prior to '97 such measurements have been done at 4.2 K for the cables. More recently these tests have also been made in atmospheric pressure 1.9 K superfluid helium. Strand stability measurements are being made at 4.2 and 1.9 K to study the effect of strand coatings and other variations in conductor parameters.

2. Scope of work

Electrical tests of cable samples during the production of cables needs to be done in a timely manner for early detection of problems during cable manufacture. Hence the schedule of tests as well as the frequency of these tests are set by the the production timetable. Experience in such testing was gained during cable fabrication for the HERA dipole magnets at DESY[2] and more recently during the cable manufacture for RHIC dipoles[3] . However, for LHC the number of such tests is an order of magnitude greater than either of the previous projects and hence requires significant upgrade to the existing test facility as described in the subsequent sections.

A) Schedule of Testing

Cable production for the 'pre-series' dipole magnets is scheduled to begin in '99, with the bulk of the manufacture to take place during the years 2000 to '04. The schedule for testing has been based on the preliminary production schedule[4] shown in table 11. The number of cable samples has been calculated on the basis of one test per cabling run, where one cabling run has 4

[2] "Manufacture and Testing of 465km superconducting cable for HERA dipole magnets", R.K.Maix et.al., IEEE Trans. on Magnetics, Vol25, p1656 (1989).
[3] "Manufacture and testing of the Superconducting Wire and cable for the RHIC dipoles and Quadrupoles", A.F.Greene et.al., IEEE Trans. on Appl. Supercon., Vol5, p397(1995).
[4] Based on schedule that was given by D.Leroy 5-15-97

unit lengths of conductor. Hence one cable test will represent either 1840m of Cable 1 or 3120m of Cable 2. Table II shows the expected number of cable samples to be tested in a given year. All of these will be tested at 4.2 K, and ~ 10% will also be tested at 1.9 K.

B). Frequency of Testing.

Using the schedule of cable production, Table III enumerates the number of tests that are to be performed in a particular year. For cables, the highest frequency of testing will be in the latter part of the production, with the number of tests exceeding 800 per year. To meet this frequency of tests, it would require that the tests be conducted at the rate of 16-20 per week. Since typically, 4 samples are tested in one cooldown, cable tests have to be conducted almost daily for a period of four years. This necessitates the use of a *minimum* of two dewar systems equipped with similar dipole magnets, such that they can be alternately warmed-up and cooled down to meet the testing schedule. Three test stations are now planned to meet the LHC test schedule at its peak testing rate.

Table II

Dates	Quantities of Cables		Measurements		
	Cable 1 km	Cable 2 km	Cable 1 #samples	Cable 2 # samples	Total # samples
FY 1999	45	75	100	100	200
FY 2000	184	380	100	129	229
FY 2001	404	822	220	278	498
FY 2002	585	1223	318	418	736
FY 2003	585	1223	318	418	736
FY 2004	585	992	318	318	636
Total	2388	4715	1374	1661	3035
100% tested at 4.2K					3035 Unit Test
10% cables tested at 1.9K					304 Unit Test

Strand electrical testing will be handled by one dewar system ,where either eight Cable1 or four Cable 2 strands are tested in a single day. In these tests the solenoid magnet is kept cold during changing of sample holders.

Magnetization tests for a very limited set of strands will be conducted using the SQUID magnetometer which is available at the Metallurgy Department at BNL.

Table III

Superconductor Testing	Total	FY97	FY98	FY99	FY00	FY01	FY02	FY03	FY04
A): Wire Tests Number	3900	300	300	300	600	600	600	600	600
B): Cable Tests Number @ 4.2K	3435	100	300	200	229	498	736	736	636
Number @ 1.9K	304			20	23	50	73	74	64
C): Strand Magnetization Number	300	30	30	40	40	40	40	40	40

3. Facility Upgrade

The requirements for testing LHC cables are quite different from any earlier conductors in several respects: a) need for 1.9 K, one atmosphere superfluid helium test, b) requirement of sample current capability in the range of 15-20 kA, c) ability to sustain a high testing rate for several years. With this in mind several improvements to the test facility were initiated in FY'96 namely 1) construction of a 1.9 K cryostat system with a lambda-plate, 2) fabrication of a special sample holder for testing cables at 1.9 K with 20 kA capability, and, 3) data acquisition of the V-I curve under current ramp condition. These have since been completed and are in operation. The other upgrades that are in execution or planned are the following : 1) additional dipole test magnets and test cryostats, 2) re-configuration of existing power supplies to deliver 25 kA for the sample current, and 8 kA for the magnet, and the associated bus-work to switch to the three cryostats systems, 3) cryogenic and controls upgrade to (a) facilitate the use of two separate helium refrigerators to fill the existing storage dewars that service the test cryostats, such that either refrigerator can be used to supply helium when the other is off-line due to maintenance or mechanical problems and (b) to semi-automate certain cryogenic operations like warm-up and cooldown of the test cryostats and cryogenic distribution among the cryostats, and c) improve controls and systems for power supply operation, safety protocol, and data acquisition .

A) 1.9 K superfluid operation

As part of a collaboration between CERN and BNL, a test facility was established at BNL to evaluate superconducting cables at 1.9 K and atmospheric pressure for the LHC. This facility was constructed using some existing components modified for operation at 1.9 K and some components supplied by CERN based on the designs incorporated in the low temperature test facilities in operation at CERN.

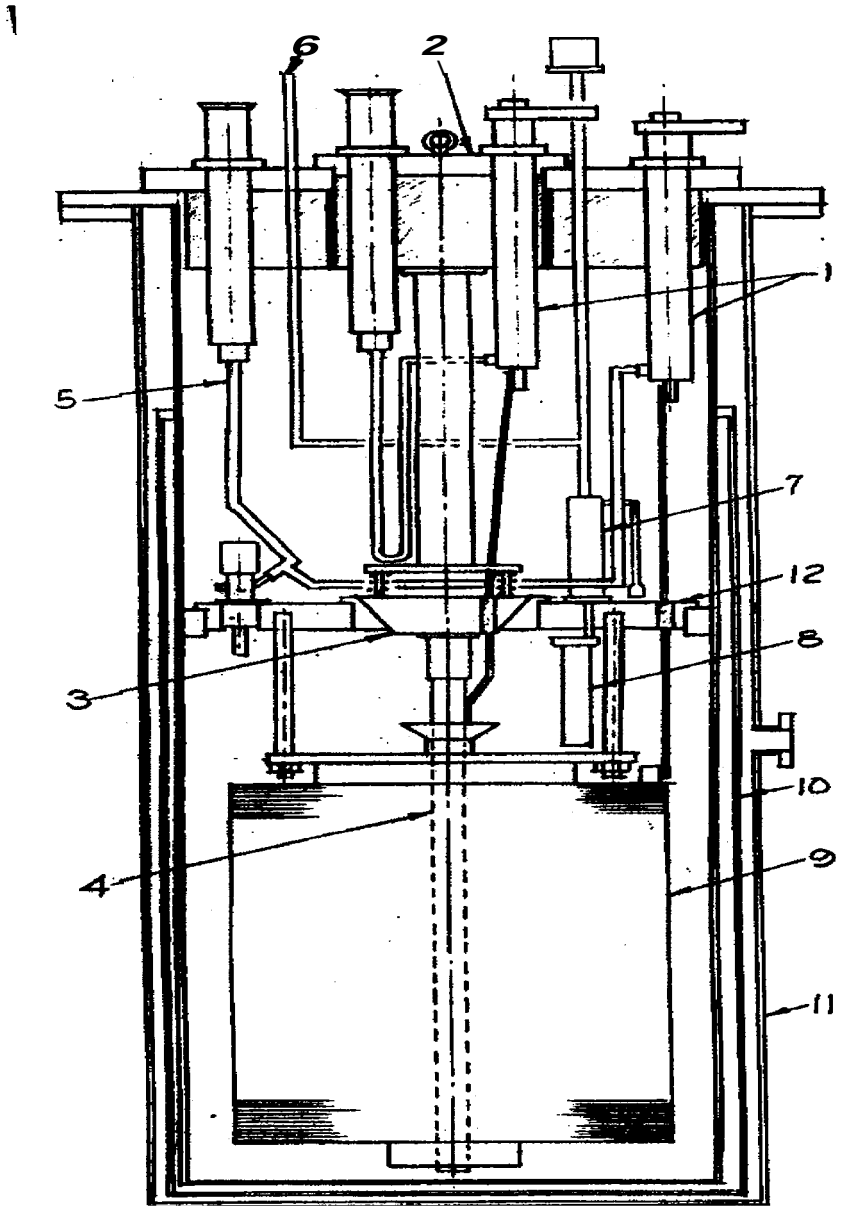

Fig 1. Vertical cryostat: (1) Liquid injection leads, (2) Sample holder, **(3)** Sample holder G-10 plug, (4) Conductor samples, *(5)* Fill line, (6) Pump line, (7) Upper counterflow heat exchanger, **(8)** J-T valve and lower heat exchanger, (9) Test magnet, (10) 10K shield, (11) Vacuum vessel, (12) Lambda plate.

The conductor test facility has several major components: 1) a helium cryostat modified to be capable of operation over a range of temperatures, 2) a large pump station, 3) a superconducting magnet in whose bore superconducting cable samples are positioned, 4) conductor sample holders, *5)* power supplies for the magnet and the conductor samples and 6) instrumentation for the cryostat and superconducting magnet.

An existing helium cryostat, shown in Fig. 1, was modified by the addition of a ring to support a 6.35 cm thick G-10 Lambda plate which separates the 1.9 K volume in the cryostat from the 4.5 K volume above it. A copper thermal shield supported by a ring welded to the helium vessel above the Lambda plate encloses the low temperature volume below the plate and about half of the volume above it. The average temperatwe of the shield is calculated to be about 10 K. Superinsulation is placed between the helium vessel and the shield and between the shield and the vacuum vessel. The heat load on the 1.9 K helium volume is estimated to be less than 10 watts.

Helium is supplied to the cryostat from two 3780 liter storage dewars connected to a 170 liter/hr (700 W) liquifier/refrigerator. Since there is some interest in pumping the entire helium volume to below atmospheric pressure for some tests, the power leads for both the test magnet and the conductor samples, which are placed inside the bore of the magnet, are cooled by injecting helium from the supply transfer line directly into the bottom of the leads. The lead flows are manually controlled at this time but are being programmed to respond to current changes in the several leads.

The pump system is a two stage system assembled by Nash-Kinema, Inc. The first stage is a plugged rotor booster driven by a 74.6 kW (100 HP) three phase motor. The second stage is a NASH liquid ring pump, also driven by a 74.6 kW motor. Control of the suction pressure is achieved by the use of a bypass valve to control spoiling of the inlet gas flow. All active components are under computer control using a GE Programmable Logic Controller. The PLC actively controls the inlet pressure and monitors operating parameters critical to the functioning of the system. Should any operating parameters fall outside normal limits, the system is shutdown to minimize damage to any component.

Once the helium level is established in the cryostat, these pumps are turned on, which pump on the helium in a three cylinder heat exchanger, supplied by CERN, mounted just below the Lambda plate as shown in Fig. 1. Liquid helium drawn through a small tube from just above the Lambda plate passes through a vacuum insulated heat exchanger above the plate where it is cooled by exchanging with the helium being pumped. The helium then passes through a J-T valve into the lower heat exchanger, and back through the upper heat exchanger to the pumps and recovery. Details of the 1.8 K cryogenic operations can be found in ref [5][5] .

[5] "A facility for evaluating superconductors above atmospheric pressure at 1.8 K , A.G.Prodell and A. Arn, presented at the ICMC conf. Portland, WA (1997)

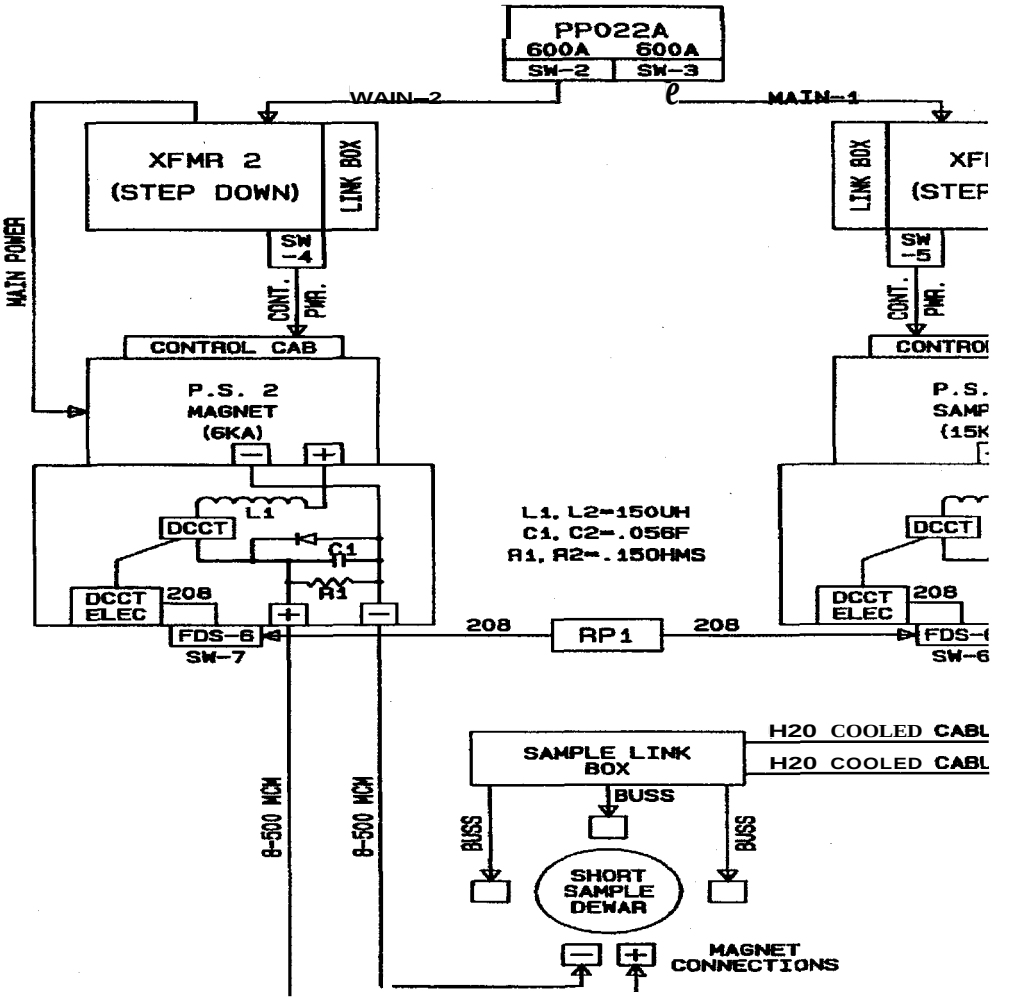

Fig 2. Present Power Supply configuration.

B) Power Supply Re-configuration

The current power supply system to the cable test cryostat consists of two Rapid Electric Co. air-cooled supplies. The supplies are SCR controlled and each is capable of producing 15 kA DC at 24 volts. One power supply delivers current to the magnet (PS2) and the other (PS1), to the conductor samples. The magnet power supply has been derated and operates at only *6* kA, while the supply for the cable samples is capable of supplying its full rated current of 15 kA.

To increase the cable current to 25kA, the two 15kA supplies are being configured to be energized in parallel. The test magnets which only require a maximum current of 5kA will be fed from another **8** kA 12 V supply. A PC-based control and monitoring system is being implemented to match the needs of the test sequence.

C) Dipole Magnet and Test Cryostats

The cable samples are measured in the central field of a 4-layer dipole magnet, which has been in use since 1989. The magnet has a clear bore of 75 mm and an effective magnetic field length of 76 cm of which **6**1 cm is uniform to 0.1 % longitudinally along the axis. It is capable of generating a magnetic field intensity of 7.5 T with a current of 3400 A at 4.5 K and 10 T with a current of 4900 A at 1.9 K. The iron yokes were adapted from parts originally made for the CBA project at BNL and uses cable identical to the inner and outer cables of the SSC 4 cm magnets. A thermally activated superconducting switch is installed across the magnet so that it can be operated in the persistent mode. Details of the construction can be found in ref **[6]**[6] .

Although this magnet reached the design field of 7.8 T at 4.5 K, it has shown considerable training at 1.9 K. The highest field reached so far has been ~ 9.0 T, however on a routine basis the field is set at 8.7 T for cable measurements.

Although two cryostats are a minimum requirement, it is prudent to have a third identical system to offset additional testing demands as well as serving as a back-up system. For these additional test cryostats that are required for production cable testing, two magnets similar in design to the existing dipole are being constructed. Since the old SSC 4cm cables are not readily available, the two inner coils of the new magnets are being fabricated using SSC 5cm inner cables which are available from SSC surplus inventory. For the outer two layers, RHIC dipole cables are being used. These are geometrically similar to the old SSC 4cm outer cable, except that RHIC conductors have a higher Cu/Sc ratio of 2.25 as compared to 1.8. Because the old coil fabrication tooling is being used with the present cables which are wider than the old SSC 4cm cables, the clear bore of these new magnets will be **68** mm. Sample holders are being modified to fit inside this reduced aperture. The additional test cryostats are being designed to operate only in ~ 4.3 K pool-boiling Helium I.

D) Cryogenic and Systems Control Upgrade

The upgrade of the cryogenic system to support the LHC conductor test program includes the installation of helium transfer lines together with a wet expander and J-T valve in parallel to liquefy helium from a second refrigerator/liquifier into the existing storage dewars. The system operates with either the wet expander or the J-T valve on-line. This upgrade helps to ensure continuity in the production of liquid helium by having one of the liquifiers in operation while the other liquifier serves as a back-up machine to be used when the operating liquifier is shut down for maintenance or repairs. Each of the two liquifiers has sufficient liquefaction capacity to support the LHC conductor test program on its own.

The upgrade of the cryogenic system will also include modifications and additions to the transfer lines such that each of the two storage dewars may be filled by either of the two liquifiers and each of the three test cryostats may be filled from either of the two storage dewars.

Additional valves and controls will be added to semi-automate several of the sequential operations associated with the use of the vertical test cryostats and to control simultaneously different operation in each of the three cryostats. These operations would include, for example, the initial pump and purge of the cryostats after installation of conductor samples, cooldown of the cryostat either by initial heat exchange of helium gas with liquid nitrogen followed by a continuing cooldown and fill with liquid helium or by direct cooldown and fill with liquid

[6] " A Nb3Sn high field Dipole", R. McClusky, K.E. Robins, and W.B.Sampson, IEEE Trans. on Magnetics, Vol27, p1993 (1991).

helium, maintenance of the liquid helium level in the cryostat during conductor tests, control of the helium flow to cool power leads, venting of the helium to another test cryostat or to gas recovery when tests are completed, and warmups of the cryostat.

4. Strand Test Procedure

Wire Critical Current Determination

General Outline: Definition of Critical Current

The V-I curve is determined as a function of increasing current until an irreversible transition or quench occurs. This measurement is normally carried out in the specified external field (**6** T - **8** T) applied normal to the wire axis, and in a temperature bath of liquid helium at 4.2 K. No correction is made for self-field effects. For currents less than the quench current the V-I curve is reversible. The critical current, I,, is defined as that at which the resistance per unit length, R, is:

$$R = 10^{-14} / (\pi d^2/4), \text{ ohmslm}$$

where d is the wire diameter in meters. The effective resistivity of the wire is 10^{-14} ohm · m at the critical current.

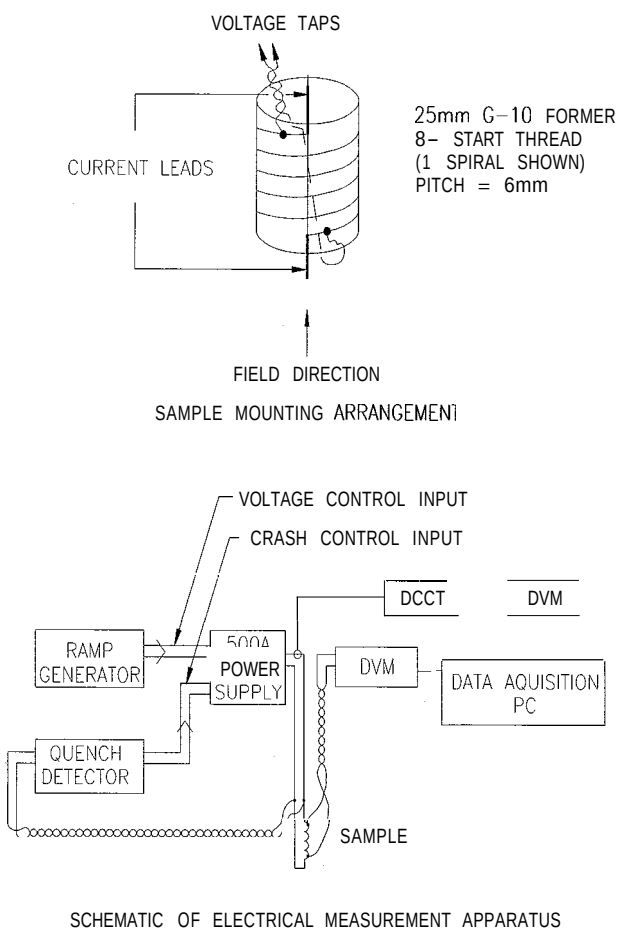

Fig. 3 Schematic of the Strand Electrical Measurement

Sample Mounting

The sample wire is most conveniently mounted on a cylindrical grooved form which is made of G-10, and which fits into a solenoid magnet. The monofilar arrangement, *Fig.* 3, is used; this lends itself to multiple sample mounting if desired. Voltage taps are arranged as shown. Adequate tension is used during the wire mounting in the groove to prevent wire motion and hence training.

The V-I curve may be taken either point-by-point (current constant for each measurement) or continuously if induced signals due to ramping are not too large or noisy. When the V-I curve is determined by the latter procedure, care is taken to ensure that there is no rate effect for the ramp rate used. Typically, the current is supplied by a stable, well-filtered power supply. The current is measured to a precision of ± 0.5%. Electronic circuitry for quench protection is used to protect the sample during a quench.

The Quality Index (n) is estimated using the equation ρ = constant × I". Data points corresponding to p-values less than 10^{-14} ohm-m will usually be less accurate than those for which p is greater than this value. Above 10^{-13} ohm-m resistive heating may cause the observed voltage values to be too large. Hence, in fitting a straight line to the log-log plot of the data, the region corresponding to $10^{-14} \leq \rho \leq 10^{-13}$ ohm-m is emphasized.

Magnetic Field

The external field is applied by means of a **8** T superconducting solenoid. The field is uniform over the sample reference length to ± 0.5%. The direction between field and wire axis is 90" ± 6" everywhere. This range of angles corresponds to an estimated variation in I, of <0.5%.

Bath Temperature Correction

The specification temperature is 4.22 K, that of boiling helium at standard atmospheric pressure. The bath temperature is recorded with the aid of cryogenic thermometry with a precision off. 0.002K (2 mK). **A** "linear T" type of correction is applied for temperatures different from 4.22 K:

$$\frac{I_c}{I_t} = \frac{T_c - 4.22}{T_c - T}$$

$$T_c(B) = 9.2\left[1 - \frac{B}{14.5}\right]^{0.59}$$

where $T_c(B)$ is the transition temperature at the specified magnetic field. I, is the current measured at temperature T, and I, is the critical current at the specification temperature.

Wire R(293) and RRR Determination

The same test set-up is used to measure the wire resistance at room temperature and at low temperatures. The resistance per meter is determined at room temperature (293 K) and just above the superconductor transition temperature (T, ~ 9.5 K). These quantities are designated R(293) and R(10), respectively, and are measured with an accuracy of 0.5%. The ratio R(293)/R(10) is defined to be the residual resistance ratio, RRR.

R(293) is determined chiefly by the copper matrix. For a given wire diameter it provides a measure of the copper-to-non-copper volume ratio. R(10) is determined chiefly by the residual

resistance of the copper matrix and R(293). The ratio RRR provides a measure of the electronic purity of the copper matrix.

Currents in the range 0.1 to 1.0 **A** for the R(293) determination and 1 to 10 **A** for the R(10) determination are provided by a well regulated and filtered DC power supply. The current is measured by means of a shunt of 0.25% accuracy thermometer of sensitivity 0.1°C is conveniently used for this purpose as an uncertainty of 1°C is not accurate enough to determine the copper-to-superconductor ratio to ±0.01. Since the measurements are made at room temperature the differences from 293 K necessitate a temperature correction. Designating the observed resistance as R_m and the ambient temperature as t(°C), the resistance at the reference temperature of 293 K is calculated as follows:

$$R(293) = R_m/[1 + 0.0039\,(t - 20)]$$

The effect of the Nb-Ti is negligible for the purpose of this correction.

Cu/Sc Ratio Calculation

The copper: superconductor volume ratio (x) is calculated from R(293) and RRR by means of the formula

$$x = \frac{1 - R(293)\,A / \rho_s}{R(293)\,A / \rho_{Cu} - 1}$$

where R(293) = resistance of the strand at 293K in ohms/m

ρ_{Cu} = resistivity of the copper at 295K, in ohm · m

$= r_i \dfrac{RRR}{(RRR - 1)}$

r_i = resistivity of pure copper at 293K

$= 1.682 \times 10^{-8}$ ohm · m

ρ_s = resistivity of Nb-Ti at 295K

$= 60 \times 10^{-8}$ ohm · m

and **A** = wire cross section area in m^2

$= \pi d^2/4$ (d = wire diameter in m)

5. Cable Test Procedure

Cable Critical Current Determination

Introduction

The sections which follow describe the test method used at BNL to determine transport critical currents of meter long cable samples. The measurement of critical currents of order 10^4 **A** is more difficult than the corresponding measurement for a wire carrying several hundred amps for a number of reasons. Large power supplies are required and sensitive voltage measurements must be made in the presence of much noise. Forces on the samples are large and care is required to restrain mechanical motion. Finally, self-field effects are large and must be carefully corrected. This section describes the methods and procedures which have been

developed at BNL over a number of years. These procedures have proven suitable for production testing.

The critical current of a cable, I_c, is somewhat less than the sum of the individual wire values as there is invariably some degradation during the fabrication of the cable. This is expressed as follows:

$$D = 1 - (I_c/\Sigma I_{cw})$$

where ΣI_{cw} = sum of the Ic's of the wires in the cable. An allowance for degradation, in modern practice, is $D < 0.05$ (=5%).

The critical current is a function of temperature, T, and magnetic field, B. It is generally necessary to convert (or "correct") short sample test results obtained at particular values of T and B, to values corresponding to a standard temperature and field. The steps in this conversion are as follows:

a) Obtain raw data for several applied fields: I_c, critical current at bath temperature, T, and applied field, B_a.

b) Calculate the peak field, B: the sum of the applied field and the self field, due to the measurement current.

c) Convert I_c at field B to I_c, the value corresponding to reference temperature T_{ref}.

d) Plot I_c vs. B and calculate I_c at the reference field from a linear fit to the data.

The calculations used in the above steps are described in detail below. The I_c vs. B short sample curve may be combined with the load line of the magnet to obtain a prediction of its expected performance.

Definition of Critical Current

Accelerator magnet cables are designed to carry currents of 1-15 kA in fields of order 6-7 T, at 4.2 K. The voltage drop under these conditions is not zero; typically it is a few microvolts per meter. The variation of voltage with current can be measured in a range corresponding to about 0.5 μV/m to 50 μV/m. Smaller voltages are difficult to measure. At the high end, the V-I curve is unstable and an irreversible quench occurs. For currents less than the quench current, the V-I curve is reversible. The critical current is a property of the reversible portion of the V-I curve. It is defined as that current for which

$$V/I = 10^{-14}/(N\pi d^2/4)$$

where V = voltage drop per m, I = current in amps N = no. of wires in cable d = wire diameter in m. The shape of the V-I curve is of the form $V = \text{constant} \times I^{n+1}$. (Note that n is defined from the equation $\rho = \text{constant} \times I^n$). The quantity n is routinely measured as required by the specifications. Large n-values are indicative of uniform filaments. The n-value is, therefore, a useful diagnostic for monolithic conductors and individual wires, although less so for cables. Usually low n-values is associated with conductor damage due to cabling. It is sometimes required that n exceed a specified value for some types of conductor.

The quench current is dependent on T and B in a somewhat similar way as the critical current. Unlike the critical current, however, it is also dependent on several external factors: insulation, ramp rate, mechanical security. These affect the characteristic feature of quench current behavior, viz., training. This is the increase in quench current upon successive

applications of current until, except in pathological cases, a limiting or plateau value is reached. This value is referred to as I_c. Temperature and field corrections are not generally made for I_c.

(a)

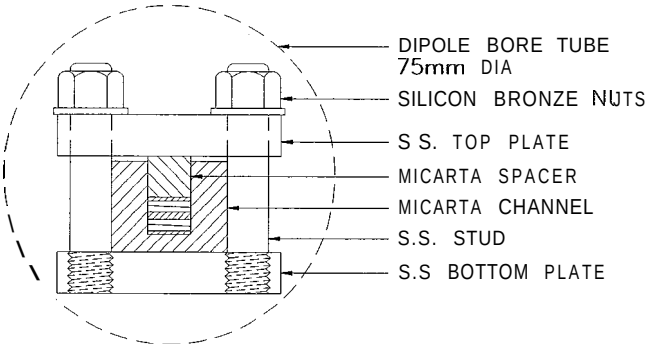

(b)

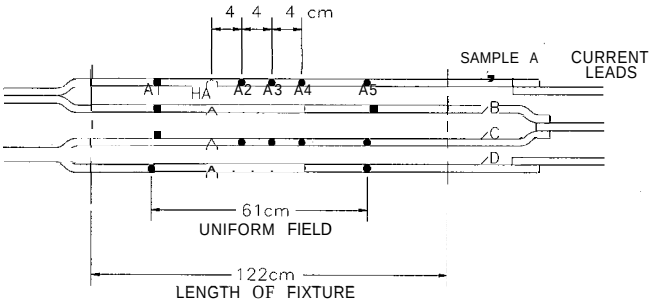

(c)

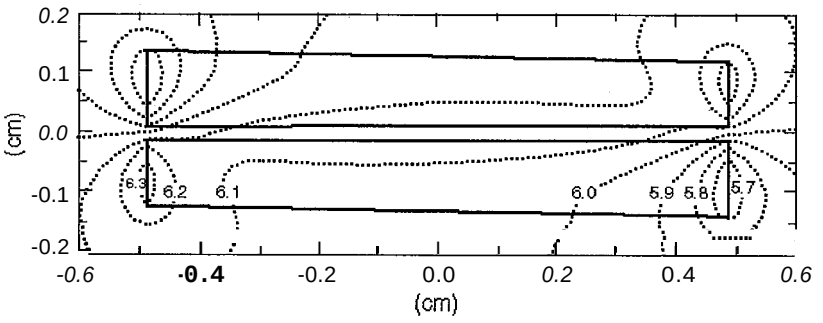

Fig. 4(a) Mechanical assembly of **2** pairs of cable. (b) Electrical Wiring Schematic. (c) Contours of constant field magnitude for perpendicular applied field of 6T and current of 10kA. The peak field of 6.4T occurs at the thin edge of the cable.

The number of training quenches is minimized in short sample testing by using bare cable samples and by strong mechanical clamping as discussed below. I, is generally greater than I, and, as it provides a measure of the ultimate current carrying capability of the cable, it is routinely recorded. If I, is less than I,, the latter may be determined by extrapolation provided there is enough of the V-I curve to permit this. However, in this event I, is of academic interest only as it cannot be attained in practice.

Sample Mounting

The samples are mounted in a compression fixture which is illustrated in Fig. 4. The usual test arrangement involves four bare cable samples. As these are keystoned, (i.e., they are trapezoidal in cross-section), care is taken to alternate thick and thin edges so that pairs of conductors present parallel surfaces to the clamping faces. As indicated in Fig. 4 there are a series of separators: 0.76 mm. thick G-10 strips which carry electrical instrumentation described below, and 0.25 mm. thick Mylar strips which insulate adjacent samples of the upper and lower cable pairs.

Compression is applied by tightening 9.53 mm (3/8 in.) bolts. These run along each side at 38 mm intervals. **A** torque of 53 N-m (240 inch-pounds) is used to tighten the bolts. This produces a clamping pressure of 54± 7 MPa for the 15 mm wide LHC cables at room temperature. The pressure has been found to increase slightly at low temperature. With this method training behavior is limited to a few quenches.

The sample compression fixture is supported together with the sample leads from a room temperature flange, which may be rotated. The standard configuration for quality control testing is the perpendicular one, i.e., the applied dipole field is perpendicular to the sample faces. In this configuration, a strong twist about a vertical axis is generated by a bifilar sample for currents above a few kiloamps in fields above several Tesla. Rotation of the sample fixture relative to the magnet is prevented by means of a locating key on the fixture and a slotted plate at the bottom of the magnet.

Figure 4 shows schematically how the cables are connected to each other and to the gas cooled leads. The connections are made using ordinary soft solder over a 15 cm. length. **A** typical joint resistance is about 10^{-9} ohm. The samples are excited in pairs, either A-B, or C-D.

Electrical Instrumentation

Primary instrumentation consists of the following:

- Five voltage taps and thin foil heater element for each sample.
  These are contained on the G-10 strips shown in Fig. 4. The voltage taps work by the pressure contact of a copper wire across the width of the sample; the leads run out through a fine groove in the G-10. The heater element is a strip of stainless steel foil, 0.013 mm. thick **x** 3 mm. x 6 mm, which is located in a shallow well formed in the G-10 strip.

- Hazemeyer DCCT secondary current standard.
- Digital voltmeters, 6-1/2 digit, 0.1 μV sensitivity

- Nicolet 12 bit, 4 channel digital oscilloscope.
- Two calibrated carbon resistor thermometers, located at each end of the magnet.
- Isolation preamplifiers, 1 mV noise level.

Secondary instrumentation consists of the following:

- Quench current protection circuits for the magnet, the gas-cooled leads, and the samples.
- DC power supplies for persistent switch, and sample heater element.
- Pulse power supply for sample heater element.

Measurement Procedure

The cable samples are energized in pairs, either A-B or C-D in Fig. 4, and the V-I curves are determined simultaneously for each member of the bifilar pair. In the event that one member has a low I, its partner may not be measurable in the set-up. The latter must be tested at another time with a partner having a comparable I, - another piece of the same cable, for example. In situations like the preceding, a minimum of two and perhaps three of the cable samples can be measured. In quality control tests of production cables, the match between samples is close enough that I_c's can usually be determined for all four samples. In the rest of this section we shall describe the procedure for testing one cable only, it being understood that a pair of samples, or all four, are under simultaneous test.

The measurements are made with the helium bath level above the upper sample and well above the top of the dipole magnet. The magnet field is set to a desired value and locked in with the persistent switch. The standard arrangement is such that the field is oriented perpendicular to the cable face.

The relative direction of the current flow and of the magnet field is very important for reasons which will be discussed below. Therefore, the polarity of the power supply connections is carefully checked. Before the V-I curve is measured the sample is trained. This is done by ramping the current until a quench occurs. For relatively high Cu/SC ratio cables, as in the RHIC design, one quench is usually sufficient to reach the plateau value of I,.

In the past a point-by-point method was employed to measure the V-I curve. For LHC testing voltage-current readings are taken with a current ramp of ~200A/s. The most important feature of this method is that a very high degree of filtering of noise voltage can be achieved by the following technique. The noise is mostly in the form of harmonics of the line frequency. By integrating the voltage signal for an integer number of cycles, this harmonic noise is filtered to a very low value. In practice, the integration is over 10 cycles, and AC peak-to-peak voltages of order 10^{-3} volts are reduced to an effective uncertainty in any DC reading of 10^{-7} volts. I, is determined while ramping by means of a peak-reading DVM. I, is determined by one sample of the pair being measured; this value is a lower limit of I, for the other sample. By observing the quench on a digital oscilloscope one can determine in which sample the quench originates. It is usually the one with the lower I, value.

The V-I data are converted to log ρ - log I data and fitted by a straight line. This gives the 10^{-14} ohm · m current and the n-value (the slope of the log-log plot). The following data are the result of the measurement: B,, T, I,, I,, n, where B, is the applied field, and I, is the quench

current or a lower limit of it. This procedure is repeated for each of the four cables at several fields in the vicinity of the specification field.

Temperature Calculation

Calculations of the critical currents at temperatures other than that at which I, is measured are made using the same procedure outlined in the procedure for wires. The only difference being that the field B is not just the applied field but that which takes into account the field produced by the cables as explained below.

Magnetic Field Correction[7]

The magnetic field is the sum of the applied field produced by the dipole magnet and the self-field produced by the measuring current. The laker produces a substantial correction. However, since the self-field is spatially non-uniform and depends upon the geometrical details of the bifilar sample, its effect on the V-I curve is difficult to calculate precisely. Experience has shown that the following assumptions give results which are self-consistent for a wide variety of geometry and which give reliable predictions of magnet behavior.

a)The critical current of the sample is determined by the peak magnetic field. This depends, of course, on the orientation of the applied field and the direction of the sample current. This important point will be discussed further in the next section.

b)The sample current is distributed uniformly over, and normal to, the area of the trapezoid which encloses the cable cross-section.

c)The geometry is accurately reproducible; this is a matter of care in assembly, as discussed above.

With the dipole field perpendicular to the wide face of the sample, the peak field occurs at a point on the surface of the sample where the self-field and the applied field are very nearly parallel; that is, they are simply additive. For the standard test configuration, therefore, the self-field correction can be written:

$$B = B_{peak} = B, + c \times I$$

where B, = dipole field and c = geometric constant. Below is given the value of c for LHC cable, for B, perpendicular to the sample, and for the standard BNL test geometry in which the bifilar samples are separated by 0.25 mm

Self-field constant, c, gauss/amp, for LHC Cable1 : 0.249

Self-field constant, c, gauss/amp, for LHC Cable2: 0.255

Critical Current of the Thin Edge:

The thin edge of a keystone-shaped cable is of special interest for two reasons. First, it forms the inner surface of a dipole (or quadrupole) magnet coil, and the maximum value of the field occurs there. Second, this part of the cable experiences the most deformation during fabrication, and possibly the most degradation. The bifilar sample test arrangement with applied field perpendicular has the characteristic feature that the peak fields occur at diagonally opposite points, at the two thin edges (c.f. Fig. 4). Experience has shown that when the current is reversed, so that the peak field points are along the thicker edges, a higher critical current is measured (even though the calculated peak field is slightly higher in this case). This is due to the smaller degree of degradation along this edge. In practice, the quality control test determines the critical current for the thin edge; i.e. the field and current direction are oriented as in Fig. 4

[7] " The effect of self field on the critical current determination of multifilamentary superconductors", M.Garber et.al., IEEE Trans. on Magnetics, Vol25, p1940 (1989)

Data Averaging Using I-B Graph

The critical currents are plotted on a graph of I vs. B and I, is obtained from an interpolation to the specification field.

The degradation of the cable, as mentioned before, is $D = 1 - (I_c/\Sigma I_{,,})$. In practice, a few wires may be measured and $\Sigma I_{,}$ estimated from this sample, but in cases where questions arise as to whether D meets a specification, it is necessary to determine $I_{,,}$ for all the wires in the Cable Map.

We have ignored the fact that the critical current of a wire is also subject to a self-field effect. However, it has become general practice not to take account of this correction, notably in discussions of J_c in the literature. For cables it is not acceptable to ignore self-field corrections for the reasons given previously: sensitivity of measurements to sample configuration and comparison of data with magnet performance. As a result of this convention, the specified degradation is lower than the true degradation, which would take account of wire self-field effect and lead to a larger value of $\Sigma I_{,,}$.

Cable R(293) and RRR Determination

As in the case of wires, the cable resistance at 293 K and that at 10 K is determined using the same set-up used for Ic determination. The residual resistance ratio, RRR, is defined to be R(293)/R(10). R(293) is measured with an accuracy of 0.5%; R(10) is measured with an accuracy of 2%.

The quantity RRR provides a measure of the state of anneal of the copper matrix. It may be used to check that a cable has been given a post-cabling heat treatment in order to facilitate coil winding, if this has been specified. Such cables have RRR values over 100, whereas, typically, cables have values around 70, if the wire has had a final anneal, and 35 if it has not been annealed after the final drawing stages.

The room temperature measurement is made using a DC current of 1 A, and voltage contacts 61 cm apart (see Fig. 4). A thermocouple device of 0.1^0C accuracy is used to determine the ambient temperature. Normally occurring room temperature variations produce significant variations in the measured resistance. Designating this resistance as R_m and the ambient temperature as $t(^0C)$, the resistance at the reference temperature of 293 K is calculated as follows:

$$R(293) = R_m/[1 + 0.0039\,(t - 20)]$$

The effect of the Nb-Ti is negligible for the purpose of this correction

The low temperature measurement is a dynamic one, made by inducing a superconducting-normal state quench while the cable is carrying current. Referring to Fig. 4, a quench is triggered in Cable A, for example, by means of heater HA. The resulting waveform observed at nearby voltage taps, A2-A3 or A3-A4, consists of three parts: a superconducting state baseline voltage, a linear ramp voltage corresponding to the passage of the superconducting-normal interface between the voltage taps, and a slowly increasing signal characteristic of the normal state resistance. The latter increases in time due to normal state heating. However, at first the voltage is almost constant due to the residual resistance characteristic of the copper. Thus, there is a kink in the voltage waveform at the beginning and at the end of the linear ramp portion. The voltage difference between these two points equals the current times the residual resistance of the section of cable between the voltage taps. The resistance per centimeter is determined for two pairs of taps (A2-A3 and A3-A4 in the above

illustration) and averaged. The taps are relatively close to the heater in order to minimize the effect of current fall-off which results from the increase of normal state resistance as the quench propagates. The usual specification is for zero magnetic field. However, the above measurement may be made in an external field, in order to determine the magnetoresistance effect. Routinely only the resistance in zero field is measured.

Copper/Superconductor Ratio

The copper/superconductor ratio of the cable is determined in nearly the same manner as for the wire; The same formulas are used but with two exceptions:

a) The area is that of all the wires, viz., $N\pi d^2/4$.

b) The spiral path of the wires necessitates applying a length correction to the measured value of R(293). For LHC cables R(293) is replaced by $1.045 \times R(293)$ in the formula .

The resistance determination of Cu/SC for cables is routinely done in the BNL short sample test procedure and serves as an accurate check on the wire data. Cable and wire Cu/SC values agree to better than 2% in well-behaved cases, i.e. those in which there have been no errors in the strands used for cabling. This determination is, therefore, an important quality control check. An example of a cable test report is given below:

HC Superconductor Cable Test Report **4/18/96**

:able: **LHC 28161**

:un No. **3804** **Ic(6.0T)=** **15.87** KA

B, T	T, K	It, A	Iq, A	n	Ic, A
6.33	4.490	12887	13364	27.1	14569
6.60	4.505	11571	12324	23.0	13282
6.87	4.505	10538	13364	23.9	12212

B T	Ic KA	Jc A/mm^2
6.00	15.869	2351
7.00	11.664	1728
8.00	7.459	1105

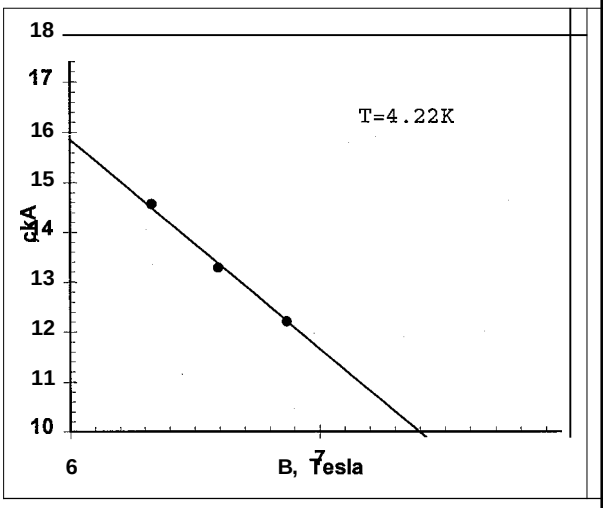

:(295)= 14.12 uohms/cm, **RRR=** 83
:(10K)= 0.17 " **C/Sc=** 1.85

:omments: Ratio of I_5/I_6=1.265.

6. Strand and Cable R&D

Two years ago, a collaboration work with CERN was begun to examine the intrinsic stability of cables' . stability is defined in terms of the minimum quench energy MQE of the cable, i.e. that energy input, of short duration applied to a small section of one wire in the cable, which is just sufficient to quench the sample. In the past attempts to measure MQE by using resistive heaters which are insulated from the strand have always yielded a high value since the thermal time constant of the heater-wire system is usually large and not well controlled. More recently ,a technique of using graphite paste heaters attached directly on the strand have proven to be effective in reducing the time constant and have yielded MQE values for single strands that are of the same order as theoretical calculations. We have successfully used this technique to measure the MQE of LHC single wires and insulated cables.

MQE tests on several LHC cables are being made to study the following:

1. Effect of cable compaction on the stability at 4.2 K and 1.9 K. This series of cables were manufactured at LBL.
2. Effect of different 'porous metal' filling of cored cables on the stability of such cables in 1.9 K superfluid helium.
3. Effect of different surface coatings on the strands. This primarily has implications in understanding the interplay of inter-strand resistance and stability.

Results to date show that the level of compaction of the cable has a significant effect on the stability of the cable to transient heat input both at 4.4 K and in superfluid helium at 1.9 K. The low compaction cable has a larger internal void space for trapped helium which helps in raising the MQE of such cables. However, the choice of compaction has to be balanced with the need to have a mechanically good cable with tight dimensional control. This has prompted CERN to change the cable dimension to decrease the compaction from 91.2 to 89.9 %.

Research on cored cables was motivated by the need to look for alternate cable designs that would reduce the eddy-current effect in LHC dipoles. Putting a resistive core into the center of a Rutherford cable increases resistance between the strands in the crossover direction, which greatly reduces the coupling currents, even when the adjacent turns remains small[9] . This allows one to improve stability by soldering strands together or using porous metal, without incurring a penalty for increased coupling. Preliminary results indicate that although the eddy current

---

"Minimum quench energies of Rutherford cables and wires", A.K.Ghosh et.al., IEEE. Trans. on App. Supercon. Vol. 7 p954 (1997).

"Rutherford cables with Anisotropic transverse Resistance", J,D. Adam er.al. IEEE. Trans. on App. Supercon. Vol. 7 p958 (1997).

coupling is reduced, this comes at the expense of reduced stability at 1.9 K, even when adjacent strands are soldered with a porous metal solder.

The recent specification for LHC cables made from AgSn coated strands calls for a post-cabling anneal at 190 C for several hours. Studies at CERN have shown that this treatment increases the inter-strand resistance from a few y-ohms to few tens of μ-ohms . This is being done to reduce the effects of eddy-current coupling on the harmonics of the magnet. The effect of this heat-treatment on the stability of the cables are being studied.

In addition to the cable tests, MQE measurements are also being done on a series of strands to understand whether the stability of such strands depend on any of the following :

1. NbTi alloy source
2. Different strand designs like whether the strand is single or double-stacked.
3. Difference in processing parameters that is employed by different wire manufacturers.

Results to date indicate that the stability of the strands as gauged by MQE measurements do not show any appreciable difference based on the source of the alloy and the processing of the wires. However, critical current measurements as a function of temperature show that the billet design does influence the relative stability of these strands. Further work is being done to understand this dependence.

7. Summary

The preceding sections describe the resources that will be available for testing and evaluation of the superconducting cables and wires for the LHC magnets. The facility upgrade will be completed by the end of 1999, in time to be ready for the cable production testing. It is expected that this collaboration will be successfully completed in the year 2004.