The only official copy of this file is the one on-line on the Superconducting Magnet Division website. Before using a printed copy, verify that it is the most current version by checking the document issue date on the website.

Large Hadron Collider
Magnet Division Procedure

Proc. No.: LHC-MAG-R-1043

Issue Date: February 28, 2001

Rev. No.: C

Rev. Date: May 6, 2003

Title: LHC D1/D2/D3/D4 Flex Joint Assembly

- Prepared by: _____Signature on File_____
- Cognizant Engineer/Scientist: _____Signature on File_____
- LHC Project Engineer: _____Signature on File_____
- Production Section Head: _____Signature on File_____
- Electrical Engineer: _____Signature on File_____
- Q. A. Approval: _____Signature on File_____
- ES&H Review: _____Signature on File_____

REVISION RECORD

Rev. No.	Date	Page	Subject	Approval
A	2/28/01		Initial Release	
B	6/5/02		Changes per ECN MG2096	
C	5/6/03		Changes per ECN MG2144	

The only official copy of this file is the one on-line on the Superconducting Magnet Division website. Before using a printed copy, verify that it is the most current version by checking the document issue date on the website.

1 Scope:

This procedure describes the assembly of LHC D1/D2/D3/D4 Flex Joint Assemblies.

2 Applicable Documents:

RHIC-MAG-R-7242	RHIC Hypot Testing
RHIC-MAG-R-7243	RHIC Low Precision Resistance Insulation Test
RHIC-MAG-Q-1004	Discrepancy Reporting Procedure
RHIC-MAG-R-8554	RHIC Soldering Base Specification
BNL Dwg. No. 14010382	D1 Flexible Joint Assembly
BNL Dwg. No. 14010203	D2 Flex Joint Assembly
BNL Dwg. No. 14010560	D3 Flex Joint Assembly
BNL Dwg. No. 14010516	D4 Flex Joint Assembly

3 Requirements:

3.1 Material/Equipment:

Crimp Tool	BNL Dwg. No. 25-1513.01-3
Flexible Joint Terminal Locating Fixture	BNL Dwg. No. 25-1473.01-4
Flexible Joint Solder Fixture	BNL Dwg. No. 25-1488.01-5
Flexible Joint Holding Tool	BNL Dwg. No. 25-1490.01-4
Flexible Joint Manual Wrapping Machine	BNL Dwg. No. 25-1481.01-5
D2 Flex Joint Assembly Tool	BNL Dwg. No. 25-1837.01-5

3.2 Safety Precautions:

3.2.1 The technicians shall be qualified by their cognizant technical supervisor in the operation of the required electrical test equipment and the electrical testing procedures. They shall be familiar with the latest revisions of the applicable documents referenced in section 2. In addition, some of these tests require the technician to have special training.

3.2.2 Some of the electrical test procedures have specific safety requirements. The technicians performing these specific tests shall rigorously follow all the safety requirements listed as well as those prescribed by the BNL ES & H Standard.

The only official copy of this file is the one on-line on the Superconducting Magnet Division website. Before using a printed copy, verify that it is the most current version by checking the document issue date on the website.

3.2.3 Hypot testing poses a Class "C" electrocution hazard. At least two properly trained technicians must be present to perform this testing. When testing, a trained technician shall be stationed at any point where the item under test is accessible to unauthorized people, and barriers shall be set up. Signs shall be posted reading "DANGER HIGH VOLTAGE" and warning lights shall be turned on.

3.2.4 Do not use alcohol near any ignition sources. Dispose of the alcohol-soaked wipes/rags in a container designed for flammable waste.

3.2.5 Specific steps of this procedure contain Electrical & Mechanical Assembly operation that impact the environment. Prior to performing these steps, personnel shall complete the applicable facility specific environmental training.

3.2.6 Eye protection should be worn when removing flux, especially on hot surfaces. If surfaces are above 140F, thermally insulated gloves (such as welder's gloves) must be worn to protect from burns.

3.3 Procedure:

3.3.1 Preparation of Inner and Outer Flexible Joint Sub-Assemblies.

3.3.1.1 Unreel two lengths of superconductor both 95 inches long. This will meet the requirements of the drawing plus about six inches.

3.3.1.2 Mark cut points on superconductor and solder-fill to each side of cut line as indicated. Cut superconductor at cut points.

3.3.1.3 Unreel two pieces of copper cable:

Dimensions in inches

	D1 / D2 / D4	**D3**
Outer Flex Joint Sub-Assembly	26.13 ± .1	23.75 ± .1
Inner Flex Joint Sub-Assembly	24.13 ± .1	20.55 ± .1

Temporarily secure loose end of electrical insulation with tape then cut cable.

The only official copy of this file is the one on-line on the Superconducting Magnet Division website. Before using a printed copy, verify that it is the most current version by checking the document issue date on the website.

3.3.1.4 Align the superconductor with the cable and secure the ends of the cable to the superconductor temporarily with tape.

For the inner flex joint sub-assembly, the superconductor should extend 9.0 inches beyond one end of the cable.

For the outer flex joint sub-assembly, the superconductor should extend 11.0 inches beyond one end of the cable.

This allows about an inch to be clipped away from each later, after attachment of the terminals. Make sure that the superconductor and cable are flush when in the approximate shape of the sub-assemblies.

3.3.1.5 Remove electrical insulation from 0.5 inch wide area on copper cable as noted, and temporarily secure loose end of electrical insulation with tape. Clean this area with alcohol. Clean superconductor, and solder to copper cable at this location only using the flexible joint solder fixture (BNL Dwg. No. 25-1488.01-5). Notice that this fixture can accommodate 12 assemblies.

3.3.1.6 Wrap indicated length "D" with electrical insulation as shown on drawing using the flexible joint manual wrapping machine (BNL Dwg. No. 25-1481.01-5) and a 50% (+0%, -5%) overlap.

3.3.1.7 Remove the temporary tape and the insulation from ends of copper cable as noted. Clean ends using alcohol.

3.3.1.8 Clean insides of terminals using alcohol. Apply small amount of soldering paste to terminals.

3.3.1.9 Install terminals for the outer sub-assembly in the appropriate terminal locating fixture.

3.3.1.10 Insert superconductor/copper cable sub-assembly into terminals. Verify that superconductor length is correct and sub-assembly fits fixture shape properly.

3.3.1.11 Crimp terminal to cable using the crimping tool (BNL Dwg. No. 25-1513.01-3) and solder terminals to cable.

NOTE

Ensure unused solder is recycled or disposed of properly

The only official copy of this file is the one on-line on the Superconducting Magnet Division website. Before using a printed copy, verify that it is the most current version by checking the document issue date on the website.

3.3.1.12 Prepare upper interconnect bus bar for soldering by cleaning the surface that mates with the flex joint (the end with the tapped holes) for a distance of 2.0 inches from the end, using alcohol.

3.3.1.13 Verify that the tapped holes will accept a screw; chase threads as required.

3.3.1.14 Apply a very thin film of soldering paste to the surface of the upper interconnect bus bar that mates with the flex joint.

3.3.1.15 Attach upper interconnect bus bar to the inner flex joint sub-assembly using drawing hardware. Torque the screws to 5-7 in-lbs.

3.3.1.16 Clean the rest of the terminals and bus bar along the surface where the superconductor will be soldered to it using emery cloth and alcohol, removing oxide and oils, and clean the superconductor using alcohol.

3.3.1.17 Apply flux paste to the contact surfaces of the terminal bus bar and superconductor. Form the superconductor, positioning it per the drawing, and clipping it to the terminals and bus bar. Dip each end into the solder pot, joining superconductor to terminals and bus bar.

NOTE

Ensure unused solder is recycled or disposed of properly

3.3.1.18 Clean off excess soldering paste and trim the superconductor (on the short end) to be flush with the end of the terminal.

3.3.1.19 Insulate the sub-assembly just formed by wrapping between the two points marked "W1" as indicated on drawing. Use a 50% (+0%, -5%) overlap.

3.3.1.20 Insulate the opposite end of the same sub-assembly between the other two points marked "W1". Use a 50% (+0%, -5%) overlap.

3.3.1.21 Repeat steps 3.3.1.9 through 3.3.1.20 for the inner sub-assembly.

3.3.2 Flex Joint Assembly

3.3.2.1 Mate inner and outer flex joint sub-assemblies with NOMEX separator between them, and place in wrapping support tool (BNL Dwg. No. 25-1490.01-4). The interconnect bus bars should be lined up, such that their cross section is symmetric, not skewed.

The only official copy of this file is the one on-line on the Superconducting Magnet Division website. Before using a printed copy, verify that it is the most current version by checking the document issue date on the website.

3.3.2.2 Install the splitters. Verify that proper alignment of the bus bars is maintained.

3.3.2.3 Install NOMEX separator between bus bars, and NOMEX protector on inside of curve as shown. Wrap bus bars between the two points marked "W2", including NOMEX within wrap where indicated.

3.3.2.4 Wrap inner and outer sub-assemblies together using a 75% (+0%, -5%) overlap (enclosing the NOMEX separator positioned as shown on drawing). Wrap from points "W3" to points "W4", on both sides of the flex joint, but do not cut insulation at point "W4"! Lay flex joint spine in place and from points "W4" on, include it within the wrap. Overlap wraps for one inch at center as noted.

3.3.2.5 Install the splitter cover assembly and the splitter cover using drawing hardware. Torque screws to 18-22 in-lbs.

3.3.3 Final Testing and Preparation

CAUTION

Electrical shock hazard exists when performing electrical tests. See paragraph 3.2.

3.3.3.1 Measure the insulation resistance between the inner and outer conductors of the flex joint assembly using an ohmmeter per RHIC-MAG-R-7243 and record the results. Verify resistance is at least 20 MΩ.

3.3.3.2 Slide conduit over bus bars.

3.3.3.3 Make a temporary "drip guard". The drip guard should be fashioned from 2.5 inch wide NOMEX. See figure 1. Install the drip guard between the bus bars, with the open side of the channel facing downward, and inserted into the conduit approximately 1.5 inches.

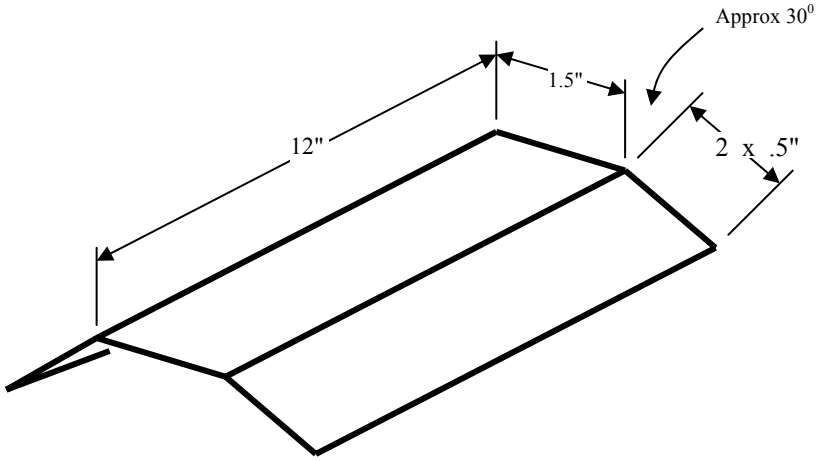

The only official copy of this file is the one on-line on the Superconducting Magnet Division website. Before using a printed copy, verify that it is the most current version by checking the document issue date on the website.

3.3.3.4 Clean ends of bus bars using alcohol to prepare for soldering. Apply a very thin film of soldering paste to the surface that mates with the 8.0 inch long extension pieces for a distance of 1.5 inches. Clean the jumper bars and the copper rivets (MS51945-116) with alcohol.

3.3.3.5 Place the jumper bars on the bus bars and install the rivets. Do not set, peen, stake, or swage the rivets.

CAUTION

Hot Surfaces. Personnel Injury from Burns. Gloves should be worn if handling fixtures above 140F

3.3.3.6 Heat the joints to flow the solder. When fixture reaches 450F, tighten all the bolts and verify that the fixture is closed. Turn the heaters off and allow fixture to cool. Disassemble and remove fixture when temperature drops below 200F. Clean off excess soldering paste. Repeat this for the second extension piece, repositioning the temporary drip guard as necessary.

3.3.3.7 Remove temporary drip guard and clean thoroughly between bus bars as required.

3.3.3.8 Trim the long end of the superconductors to length per the drawing. Tin the leads before clipping.

CAUTION

Electrical shock hazard exists when performing electrical tests. See paragraph 3.2.

NOTE

Ensure unused solder is recycled or disposed of properly

3.3.3.9 Repeat the measurement of the insulation resistance using an ohmmeter per RHIC-MAG-R-7243 and record the results. Verify resistance is at least 20 MΩ.

3.3.3.10 Perform the hypot test at 5 kV per RHIC-MAG-R-7242 and record the results. Maximum allowable leakage 10μa.

The only official copy of this file is the one on-line on the Superconducting Magnet Division website. Before using a printed copy, verify that it is the most current version by checking the document issue date on the website.

4 Quality Assurance Provisions:

4.1 The Quality Assurance provisions of this procedure require that the technician shall be responsible for performing all assembly operations in compliance with the procedural instructions contained herein and the recording of the results on the production traveler.

4.2 The technician is responsible for notifying the technical supervisor and/or the cognizant engineer of any discrepancies occurring during the performance of this procedure. All discrepancies shall be identified and reported in accordance with RHIC- MAG-Q-1004.

4.3 Measuring and test equipment used for this procedure shall contain a valid calibration label in accordance with RHIC-MAG-Q-1000.

5 Preparation for Delivery:

N/A