“PHOBOS” HI Group

Mark D. Baker
Brookhaven National Laboratory

Over a billion events served...

Sukhanov

Species

# of events

Energy (GeV)

	p+p	d+Au	Cu+Cu	Au+Au
410	**20M**			
200	**100M**	**150M**	**400M**	**250M**
130				**4.3M**
62.4			**110M**	**22M**
55.9				**1.8M**
22.5			**20M**	
19.6				**~1M**

- Baker
  - Acting Spokesperson (Feb.-Sep. 2004)
  - Deputy Spokesperson
- Chai
  - Online datamover
- Nouicer
  - Si systems expert
- Pak
  - Operations Coordinator
- Steinberg
  - Project Manager
- Sukhanov
  - Data Acquisition

PHOBOS Physics: Multiplicity

BNL in bold yellow

Key analysis roles played by: **Nouicer, Steinberg, (Baker)**

"conveners"

Multiplicity papers (corr. authors)

Committee

Baker/Steinberg

- Phys. Rev. Lett. 85, 3100 (2000) - G. ROLAND
- Phys. Rev. Lett. 87, 102303 (2001) - WUOSMAA
- Phys. Rev. C 65 , 31901R (2002) - **STEINBERG**
- Phys. Rev. Lett. 88 , 22302 (2002) - G. ROLAND (BAKER chair)
- Phys. Rev. C 65 , 061901R (2002) - **STEINBERG**
- Phys. Rev. Lett. 91, 052303 (2003) - **BAKER**
- nucl-ex/0301017, subm. to PRL - **STEINBERG**

Baker, Pak

Pak

Hofman/Nouicer

- Phys. Rev. Lett. 93, 082301 (2004) - **NOUICER**
- Phys. Rev. C70 021902R (2004) - HOFMAN
- nucl-ex/0409021, PRC-RC (in press, 2005) - **NOUICER**
- nucl-ex/0507xxx, subm .to PRC-RC - **STEINBERG**

BNL group plays a leading role

Why multiplicity?

Steinberg, UCSB/ITP, April 2002

Geometry

Impact parameter, Participants, Binary Collisions

Entropy Production

Stopping, Gluon production, Saturation, Fragmentation

Time Evolution

Formation, Expansion, Hadronic rescattering, Freezeout

If we can factorize the role of trivial **geometry**,
QCD can tell us about **entropy**,
if information survives **hadronization**

Recent multiplicity results

nucl-ex/0507xxx

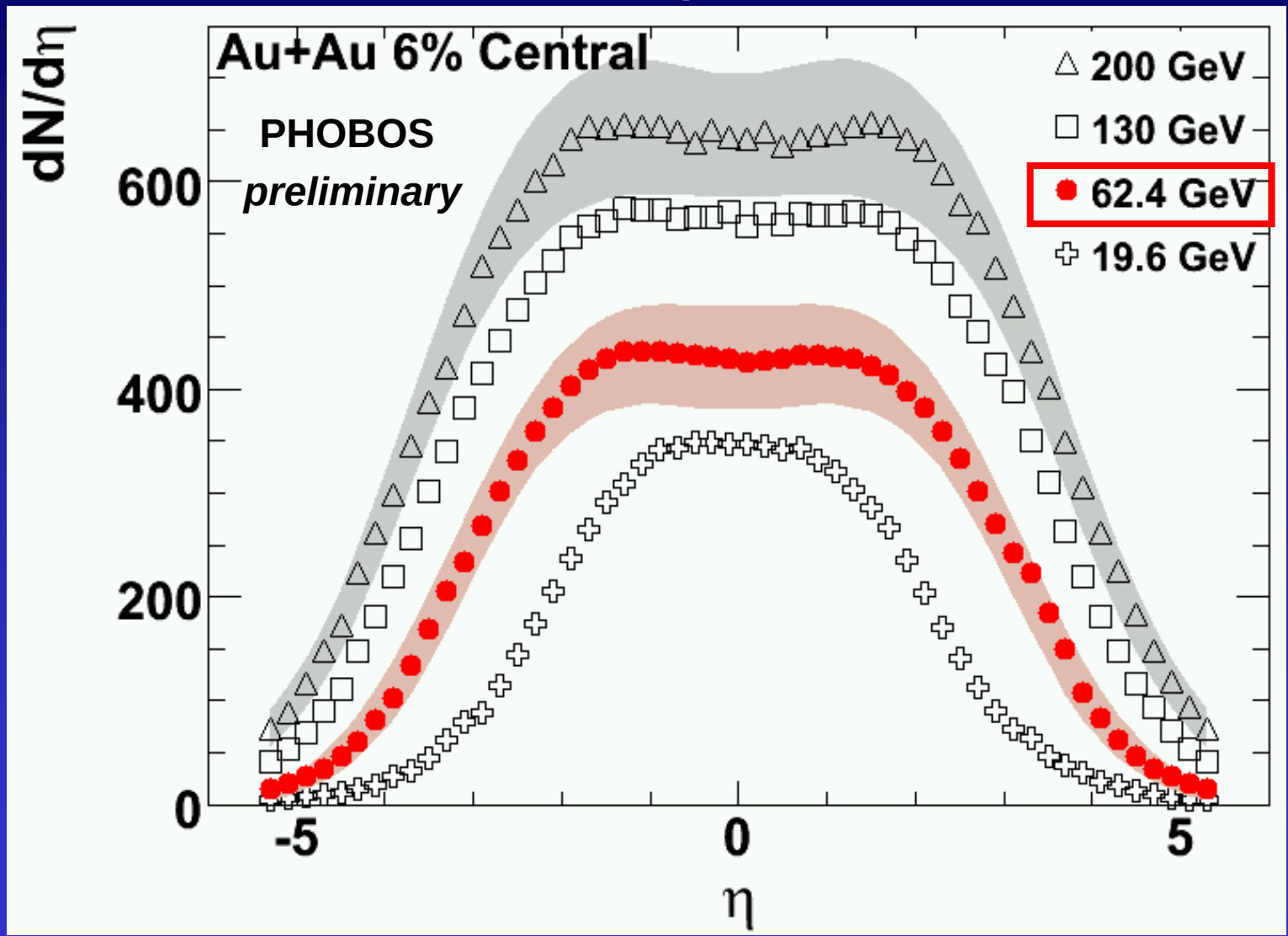

Energy / Geometry factorization

nucl-ex/05xxxxxx, subm .to PRC-RC

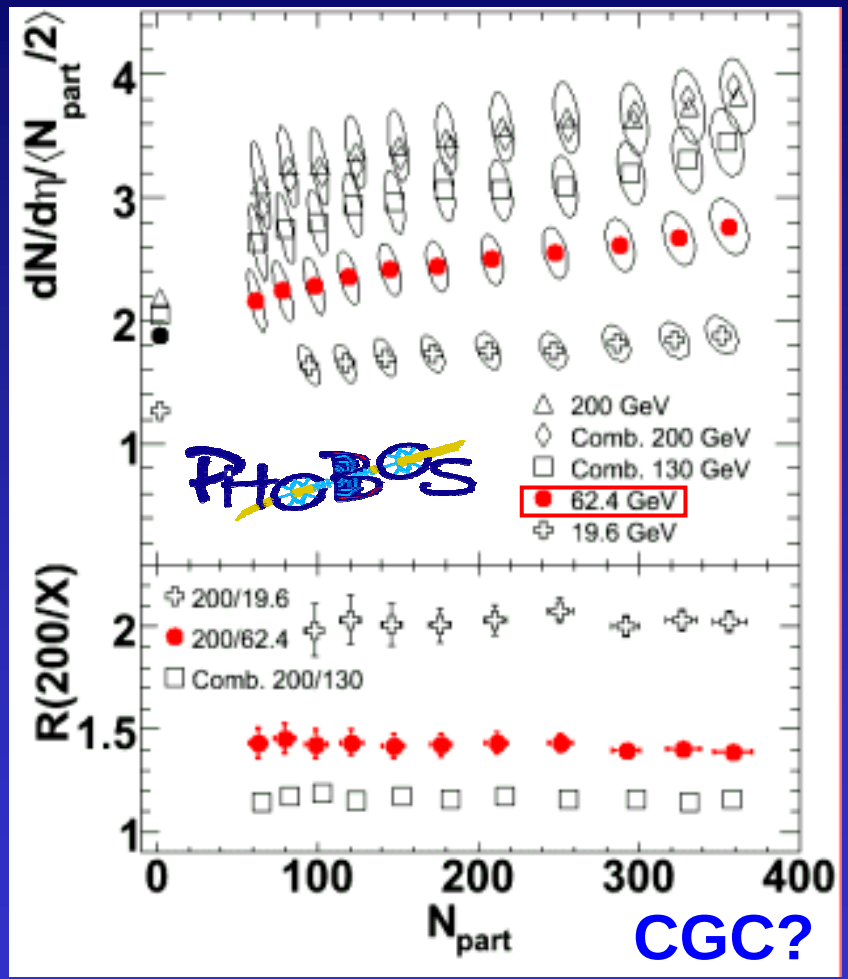

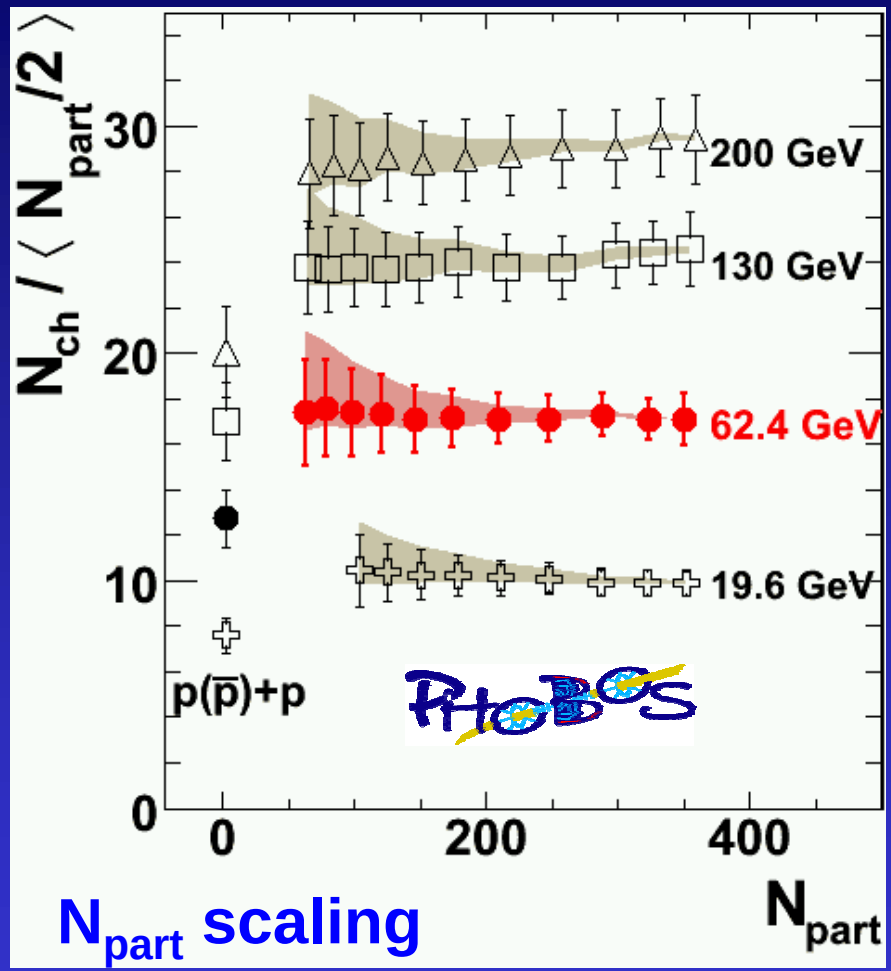

PHOBOS Physics: the other half

BNL in yellow

- Phys. Rev. Lett. 87, 102301 (2001) -
- Phys. Rev. Lett. 89, 222301 (2002) - (BAKER,GEORGE on comm.)
- Phys. Rev. C 67, 021901R (2003) - (GEORGE on committee)
- Phys. Lett. B 578, 297 (2004) - (STEINBERG on committee)
- Phys. Rev. Lett. 91, 072302 (2003)- (BAKER, HOLZMAN on comm.)

- Phys. Rev. C70, 011901R (2004) - **GEORGE** (ratios) (PAK on committee)
- Phys. Rev. C70, 051901R (2004) - (STEINBERG on committee)
- Phys. Rev. Lett. 94, 082304 (2005) - (STEINBERG chair)
- Phys. Rev. C70, 061901R (2004) - (BAKER, HOLZMAN on comm.)
- Phys. Rev. Lett. 94, 122303 (2005) - (BAKER on committee)
- nucl-ex/0407012, subm. to PRC-RC - **GEORGE*** (flow) (BAKER on committee)
- nucl-ex/0409001, subm. to PRC-RC - **HOLZMAN** (HBT)
- Phys. Rev. C71, 021901R (2005) - (PAK on committee)

* - taken over by Mignerey

PHOBOS "White Paper", Nucl. Phys. A 757, 28 (2005) **BAKER, STEINBERG** contributed text

BNL group participates strongly

Elliptic Flow and Source Size

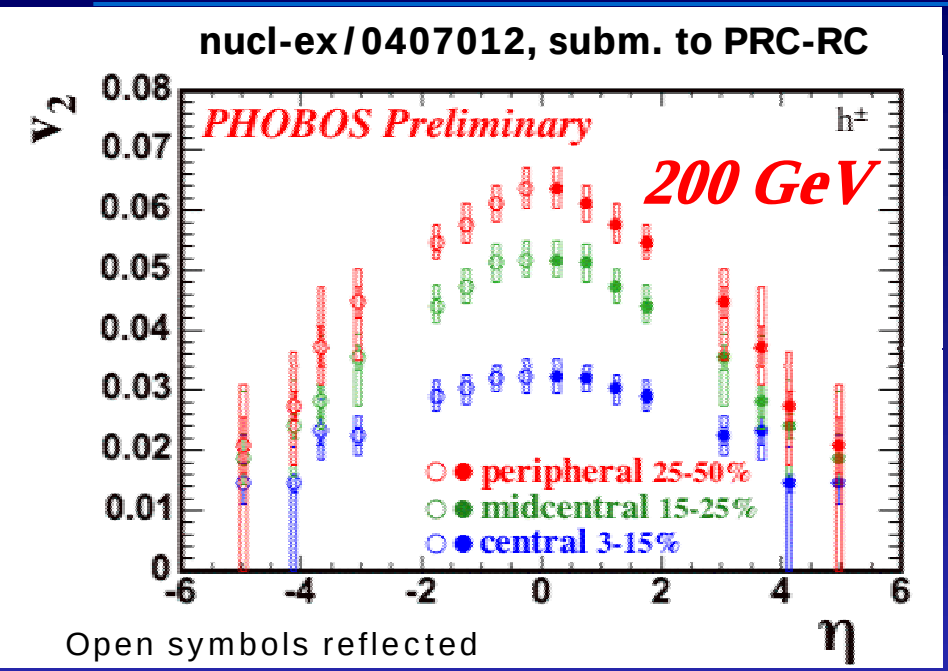

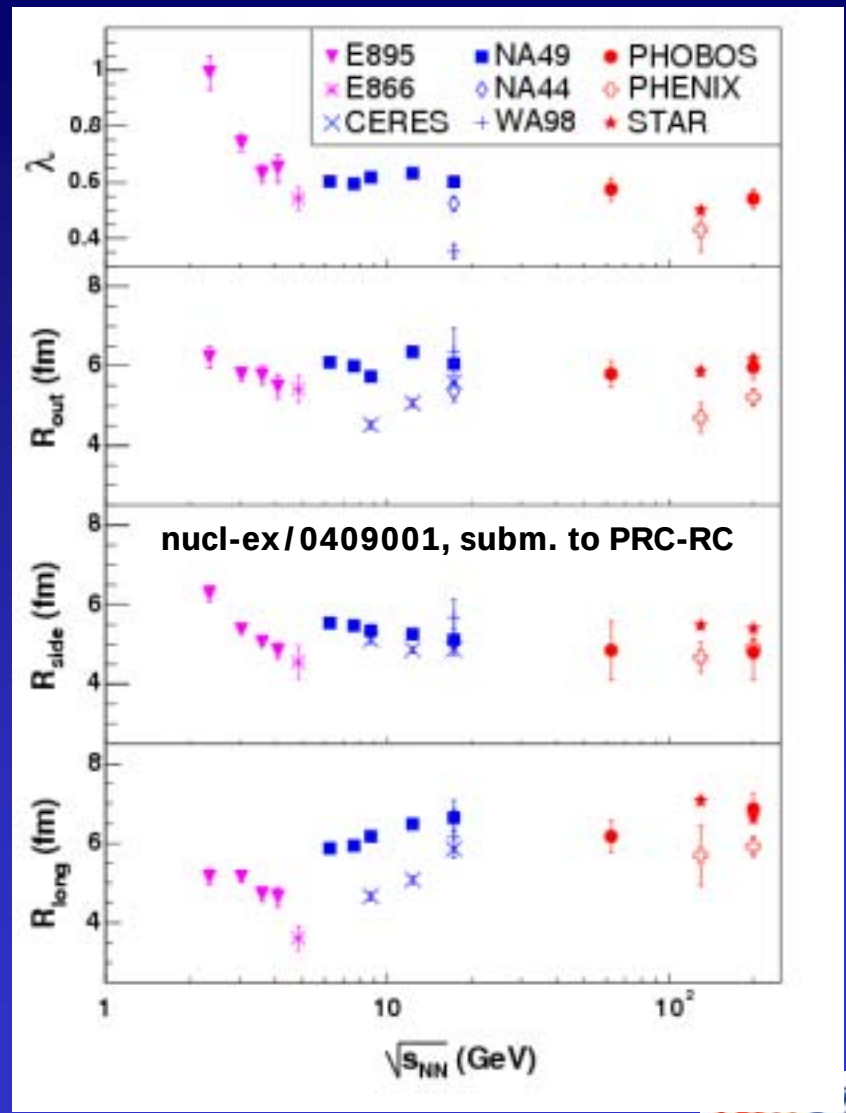

- Elliptic flow over a uniquely broad range of η.
- HBT at a unique energy.

Quark Matter Presentations

BNL in yellow

- January 2001:
  - Plenary: **G. Roland**
  - Parallel: **George,** Holzman, **Katzy,** Pak, **Park**
  - Summary: Steinberg
  - Program Comm.: Baker
- July 2002:
  - Plenary: Baker
  - Parallel: **Manly, C. Roland,** Steinberg, **Wosiek**
- January 2004:
  - Plenary: Steinberg
  - Parallel: **Belt,** Holzman, Nouicer, **Veres, Wozniak**
- August 2005:
  - Plenary: **G. Roland**
  - Parallel: **Manly,** Steinberg**, Stephans, Trzupek**

Selected talks since 1/2004

- Baker
  - RHIC/AGS Users' Meeting Plenary, May 2004
- Chai
  - RHIC/AGS Users' Meeting workshop, June 2005
- Nouicer
  - Quark Matter, January 2004
  - JPS/APS Hawaii meeting workshop, September 2005
- Steinberg
  - Talks
    - Quark Matter plenary, January 2004
    - Plenary Summary talk, Strange Quark Matter, September 2004
    - Quark Matter, August 2005
  - Organizer:
    - Strange Quark Matter September 2004
    - RHIC/AGS Users' Meeting workshops, June 2005

Support for Education

- BNL-resident PhD students graduated since 1/2004
  - Abigail Bickley (U. of Maryland - now at Colorado)
    - Collaborated closely with George
  - Chia-Ming Kuo (NCU-Taiwan)
    - Officially co-advised by Baker
  - Carla Vale (MIT - now at Iowa State)
    - Collaborated closely with George

Awards in the last month:

RHIC/AGS 2005 Users' Meeting

Praveen Chaudhari with thesis award-winner Abigail Bickley

Peter Bond with poster session winner Carla Vale

Phobos Analysis Plans

- BNL Group (+PHOBOS)
  - dN/dη distributions
  - Event-by-event dN/dη
    - Fluctuations/correlations
  - Flow: v_1 and v_2
  - HBT @ low pT (w/ NCU)
  - Charged hadron spectra
    - Including very low p_T

- Other Phobos plans
  - Identified spectra
  - Particle/antiparticle ratios
  - Tagged p/n+Au spectra
  - Phi meson
  - 2-particle correlations over a large η range

Steinberg: Head of Computing, RCF Liaison

Unique event-by-event capabilities

(until full PHENIX Si Vertex comes online)

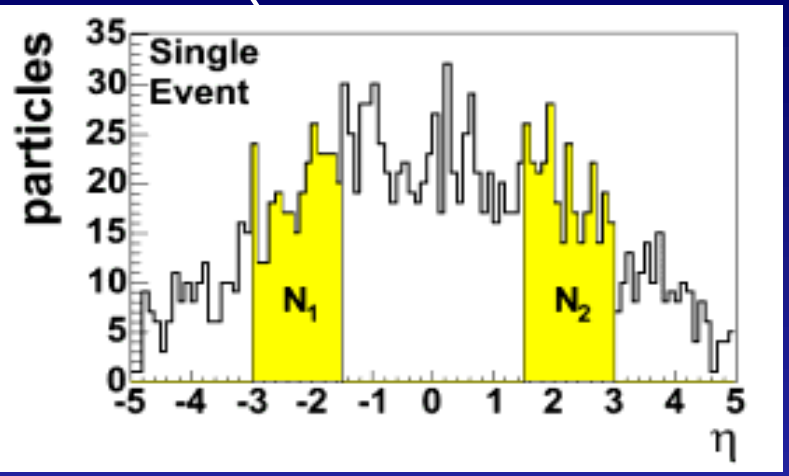

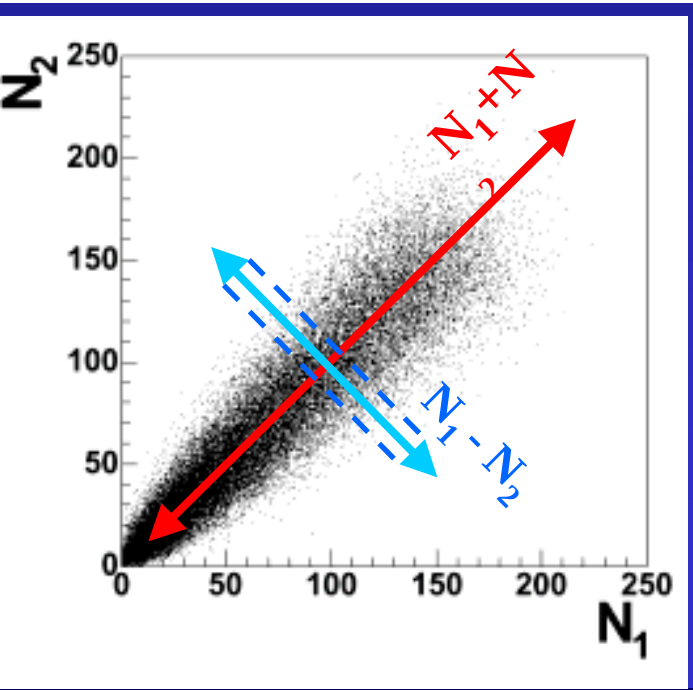

Chai, Users' Meeting 2005
Steinberg, QM2005

Measure σ_C

$$C = \frac{N_1 - N_2}{\sqrt{N_1 + N_2}}$$

Phobos experiment summary

- Physics conclusions so far (White paper)
  - High energy density matter created at RHIC w/ unusual properties.
  - The data are simpler than the models
    - Scaling behavior and factorization of energy/centrality dependences
      - Suggests global constraints
      - Illustrates importance of the collision geometry in the intial state and early evolution of the system (Color Glass Condensate?)
- Plans: Use unique features of Phobos data already on tape to study this further.

Participation in Phenix VTX

Baker, Chai,
Nouicer, Pak,
Steinberg, Sukhanov

Joined PHENIX VTX proposal
Upgrade PHENIX's medium-probing capability

- Open heavy flavor (c,b)
- Resolution at high p_T
- Event-by-Event reaction plane

Strawman design under investigation

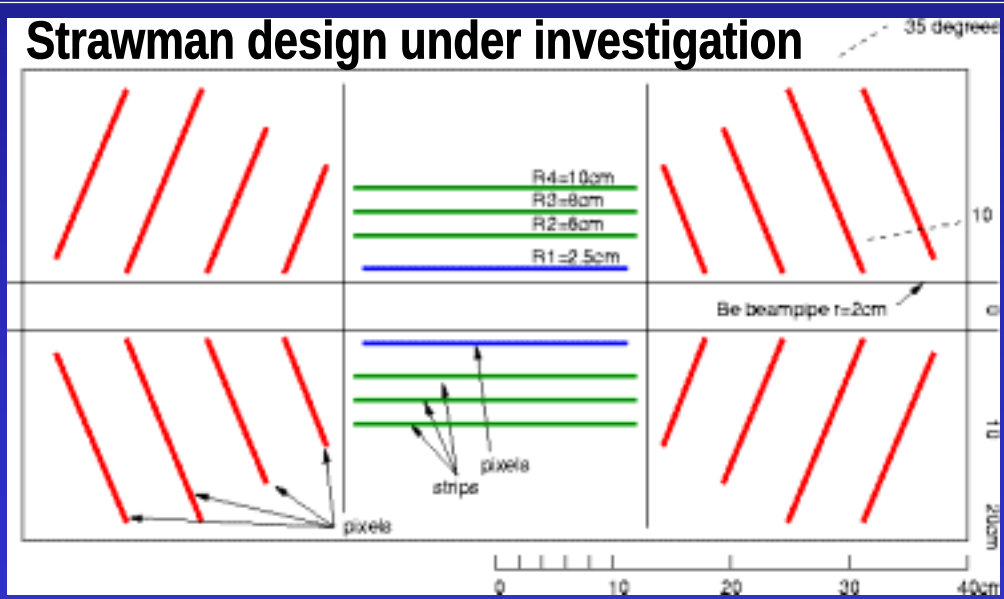

Integration responsibilities in Phenix

- **Pak** is “Integration & Aux. Systems Manager”, VTX
- Very active in Phenix for ~1.5 years
- Collaboration Member for 1/2 year

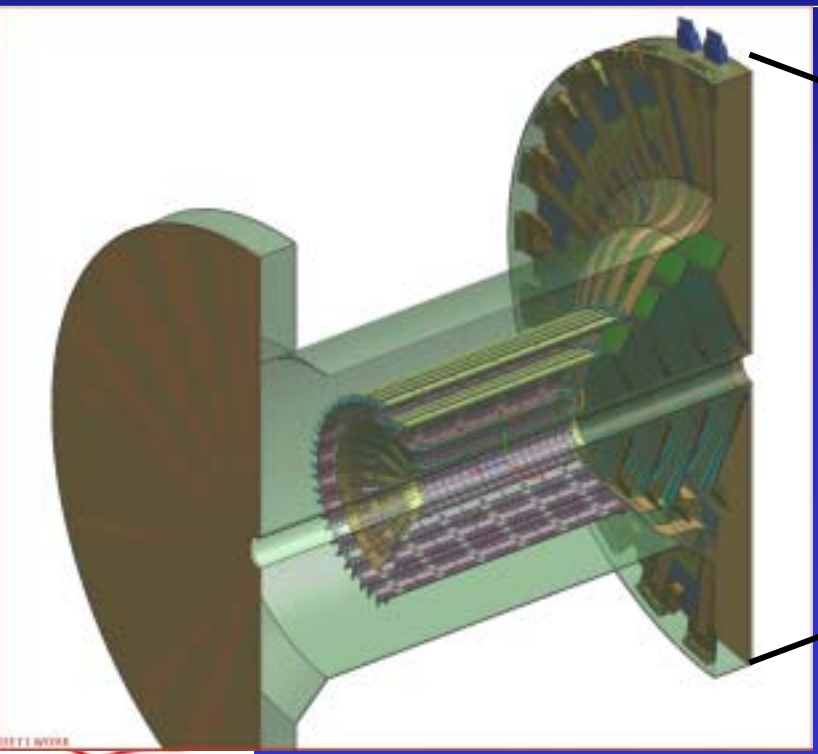

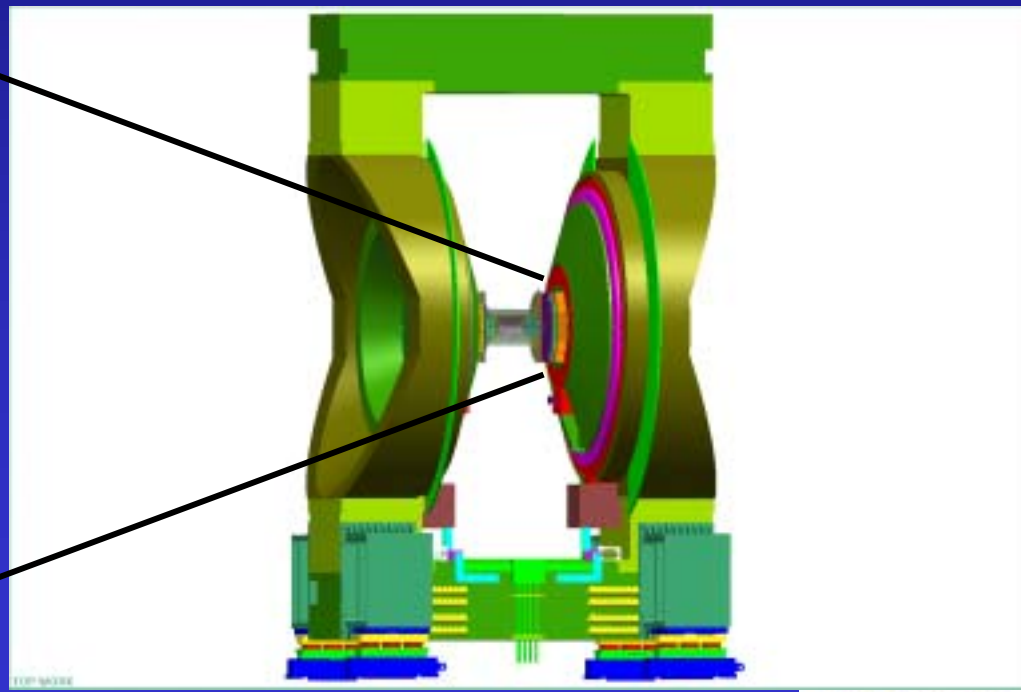

Enhancing the Si expertise of Phenix

- **Nouicer** is head of the BNL Si testing lab.
  - Active in Phenix VTX for ~ 1 year
  - Close collaboration with SBU, RBRC,ISU
  - Helping establish labs at SBU & UNM
- Lab is already active
  - Wafers tested, 1 diced & retested
  - Sensors → RIKEN for module construction

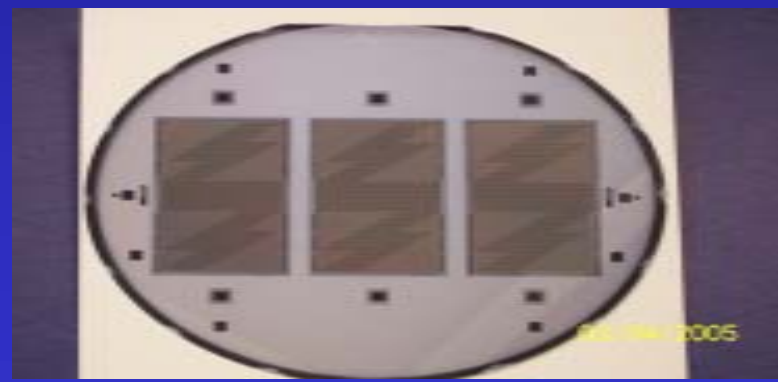

Planned Analysis / Physics using VTX

- Technical operational support (a la PHOBOS)
  - Calibrations (& database)
  - Hit clustering algorithms
  - Detector-specific online plots
- Heavy flavor vs. ϕ & p_T
  - Leverages our work on collective flow with a Si barrel in Phobos
    - (George), Baker, Nouicer
- Event-by-event global fluctuations
  - Leverages our work on fluctuations in Phobos
    - Baker, Chai, Steinberg

Group Plans for ATLAS-HI

- Our group:
  - Baker: Co-leader of US-ATLAS HI effort
  - Steinberg: “Day 1 Physics” at ATLAS
    - pp and PbPb
- Collaborate closely with BNL groups:
  - U.S.Atlas BNL-Physics (HEP) group
    - Takai, Nevski, Gordon ...
  - S. White, BNL-Physics (NP)
- And with U.S. Groups:
  - Colorado, Columbia, SBU-Chemistry
- Ex-PHOBOS collaborators…
  - INP-Cracow, Heinz Pernegger (CERN)

PHOBOS BNL Group (1/2004)

- 7-8 FTEs supported (~50/50% Res./Ops.)
  - Mark Baker (group leader)
  - Rachid Nouicer (BNL/UIC - 50/50%)
  - Robert Pak
  - Iouri Sedykh
  - Peter Steinberg
  - Andrei Sukhanov
  - Zhengwei Chai (RA)
  - Burt Holzman (RA)
- Not supported on DOE-NP PHOBOS funds
  - Don Barton (CA)
  - Chia-Ming Kuo (student - NCU Taiwan)
  - Alan Carroll (CA-retired)
  - Nigel George (LOA)
  - Michael Hauer, Helen Seals, Maciej Stankiewicz (stud.)

PHOBOS BNL Group (7/2005)

- 6.5 FTEs supported (~50/50% Res./Ops.)
  - Mark Baker (group leader)
  - Rachid Nouicer (full time)
  - Robert Pak
  - ~~Iouri Sedykh~~ → CERN
  - Peter Steinberg
  - Andrei Sukhanov
  - Zhengwei Chai (RA)
  - ~~Burt Holzman (RA)~~ → FNAL
- Not supported on DOE-NP PHOBOS funds
  - Don Barton (CA)
  - Chia-Ming Kuo (postdoc - NCU Taiwan)

Future Needs (FY06--)

- Roughly Constant Effort scenario FY05 → FY06
  - Mark Baker (PHOBOS/ATLAS + PHENIX)
  - Rachid Nouicer (PHOBOS/PHENIX)
  - Robert Pak (PHENIX)
  - Peter Steinberg (PHOBOS/ATLAS + PHENIX)
  - Andrei Sukhanov (PHENIX)
  - Zhengwei Chai (RA-PHOBOS/PHENIX)
  - new hire (RA- PHENIX/ATLAS)
  - joint-hire + student w/ SUNYSB-Chem.
    - Joint-staff + 1 student cost = 1 postdoc cost
    - Note: may be a neutrino or heavy ion position
- Modest growth in FY07-FY08 would be ideal.

PHOBOS HI Group - Summary

- The last five years (and last 1.5 years)
  - PHOBOS has been very productive.
    - 8 PRLs, 15 other papers, >1000 citations total
  - BNL group has played a leadership role in the physics research
    - Particularly in terms of multiplicity
- The future
  - PHOBOS data analysis should be supported to exploit unique capabilities for data on tape.
  - Group gradually shifting focus to Phenix (Si VTX)
  - Working on U.S. ATLAS Heavy Ions.

LHC Heavy Ions with ATLAS

Mark D. Baker (& Helio Takai)

Brookhaven National Laboratory

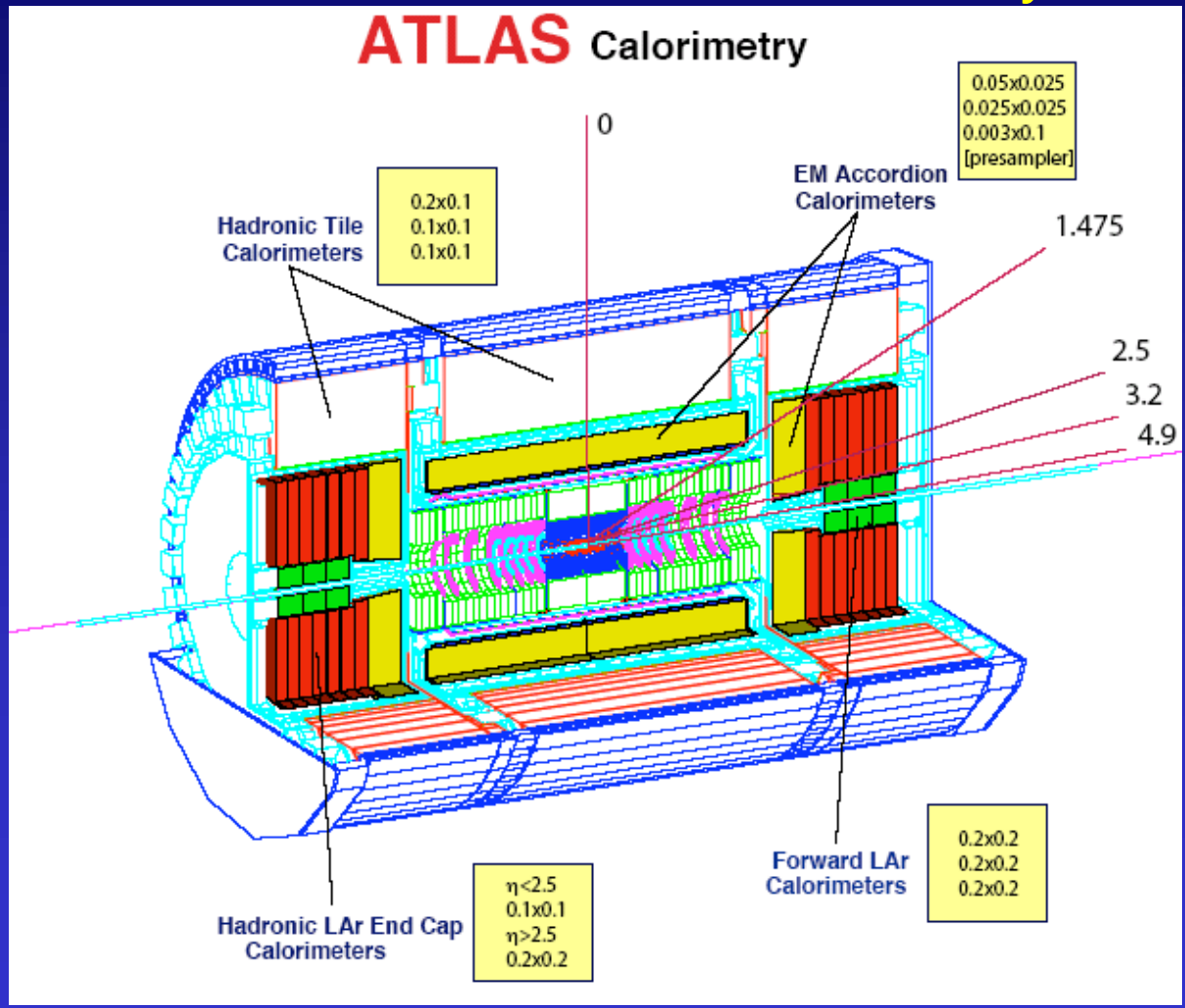

Why LHC?

The Artist's view

Takai, November 2004

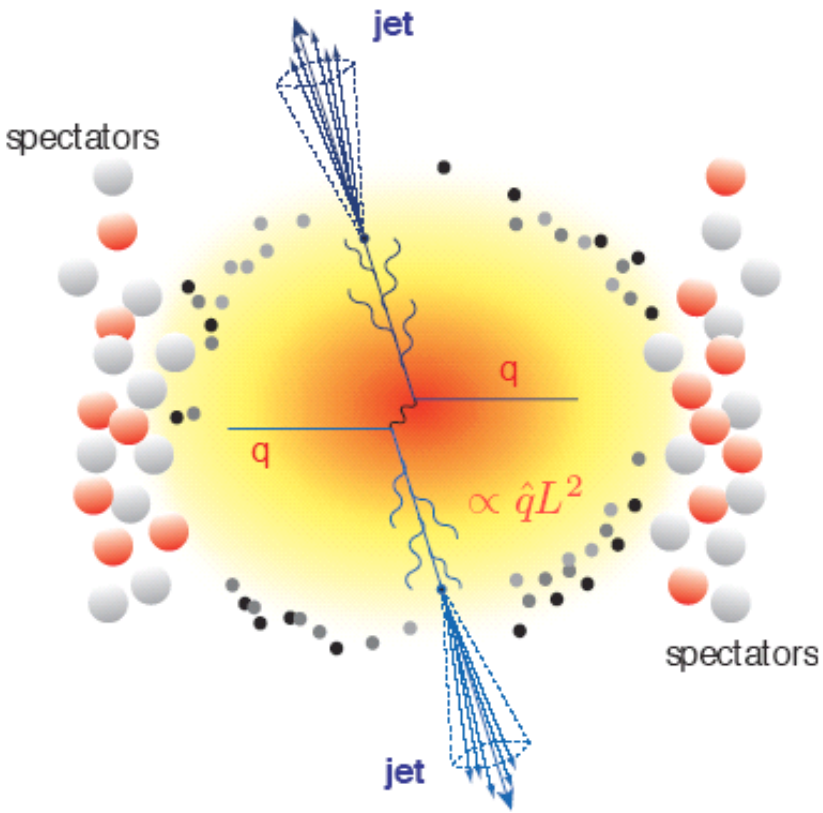

LHC heavy ion collisions are expected to produce a hotter, denser and longer lived QGP.

The increase in hard process cross section make them a good tool to explore the hot QCD matter.

The energy loss of hard scattered partons provides a direct probe of color charge density of medium.

Upsilon states and J/ψ can serve as thermometers of the hot QCD matter.

"Quenching" = induced gluon radiation

Why Atlas (&LHC)?

ATLAS *can study jets at moderate p_T where quenching is still strong and at very high p_T where quenching is expected to disappear.*

Rates

PbPb collisions will produce large amounts of jets!!!! Each collision will produce 1 (one) E_T=20 GeV jet. In each 10^6s run at nominal luminosity of $4x10^{26}$ we expect:

p_T threshold	jets
50 GeV	$40x10^6$
100 GeV	$1.0x10^5$
200 GeV	$2.0x10^4$

($|\eta|<2.5$), A. Accardi, N. Armesto and I.P. Lokhtin, hep-ph/0211314

We also expect ~1000 γ+jet events in a 1 GeV bin at E_T= 60 GeV
~ 500 $Z^0(\mu^+\mu^-)$+jets total

ATLAS *has a hermetic and highly segmented calorimeter both 'ongitudinally (in* R *) and transversely (in* η *and* Φ*).*

Day one physics (pp & PbPb)

- Multiplicity
  - Bjorken's revenge?
    - Return of boost invariance
  - Logarithmic in $\sqrt{s}$?
  - Landau ($N_{total} \sim s^{1/4}$)
- Elliptic flow
  - Limited by hydrodynamics?
- Spectra
  - First look at jet quenching

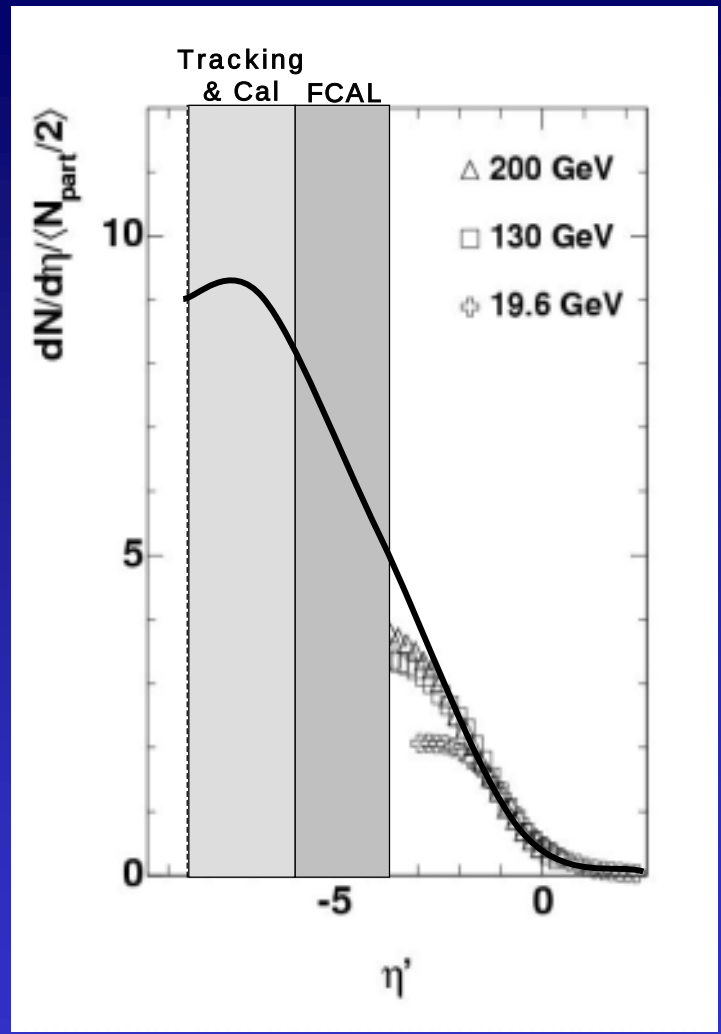

Adapted from Steinberg, Atlas Week, 2/2005

Zero-Degree Calorimetry

- Useful for Heavy Ion Physics
  - centrality
  - luminosity measurement
- Useful to mainstream Atlas Collaboration / LHC
  - Day 1 p+p collision tuning & luminometry
    - A. Ratti, H. Schmickler, S. White
- eRHIC preview (low Q^2)
  - Ultraperipheral collisions yield
    - high energy $\gamma\gamma$ & γA

Luminosity Scale in Heavy Ion Runs from Calculated EM Processes

for PbPb@LHC A.J.Baltz, C.Chasman and S.White NIM A417 (1998) 1

ATLAS Zero Degree Calorimeter Stationed @ +/-140m from I.P.

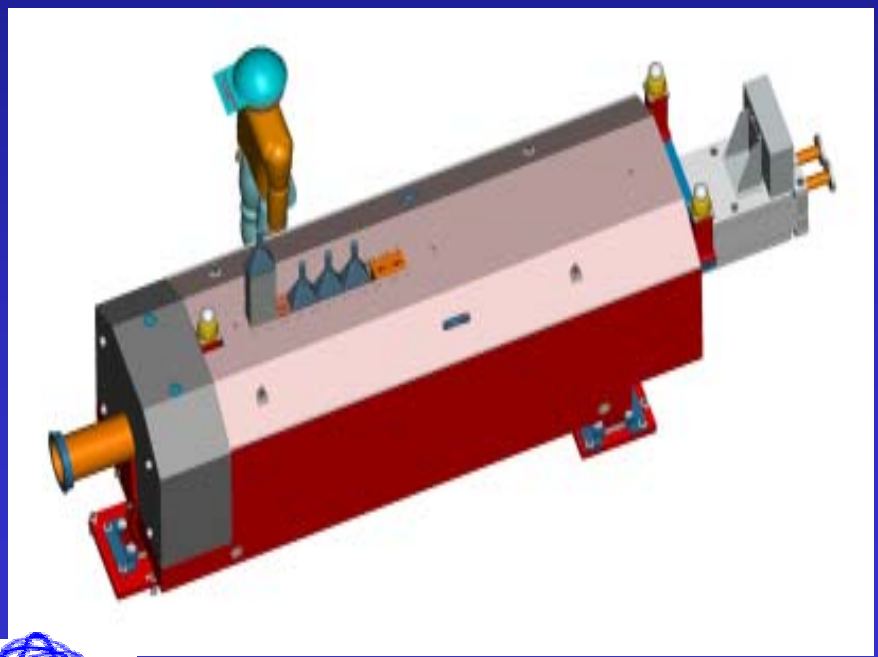

EM processes in RHIC data

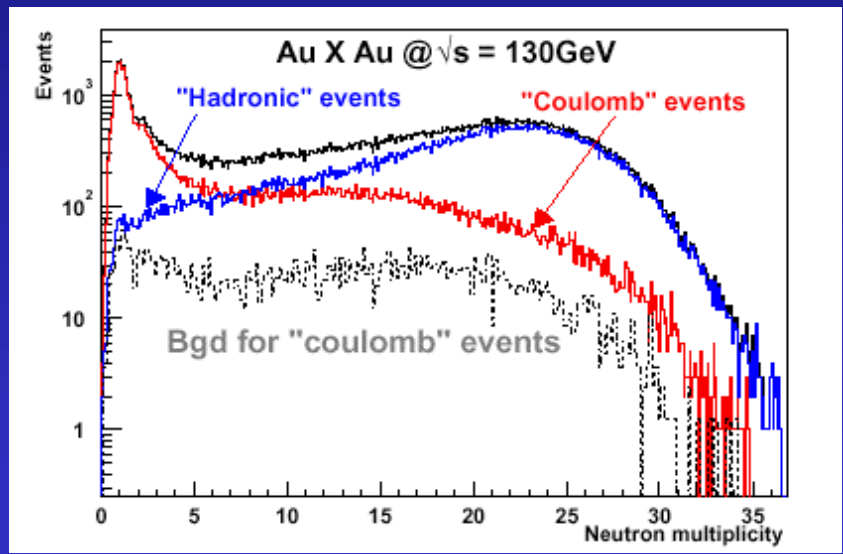

eRHIC Preview (hard photoprod.)

Jets into the large acceptance calorimeter!

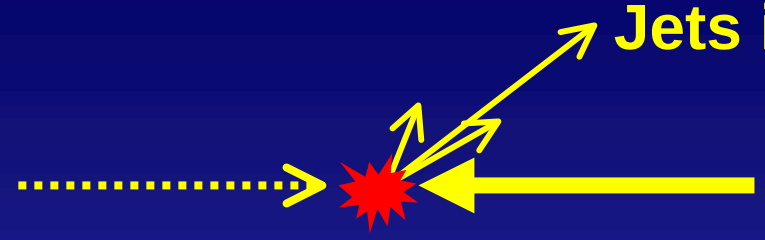

20 GeV γ **5.5 A TeV Pb**

Event yields from a 1 month HI (Pb-Pb) run at nominal Luminosity.
Counts per bin of δpt=2 GeV
$\delta x_2/x_2$=+/- 0.25

(M. Strikman,
R. Vogt and S.White)

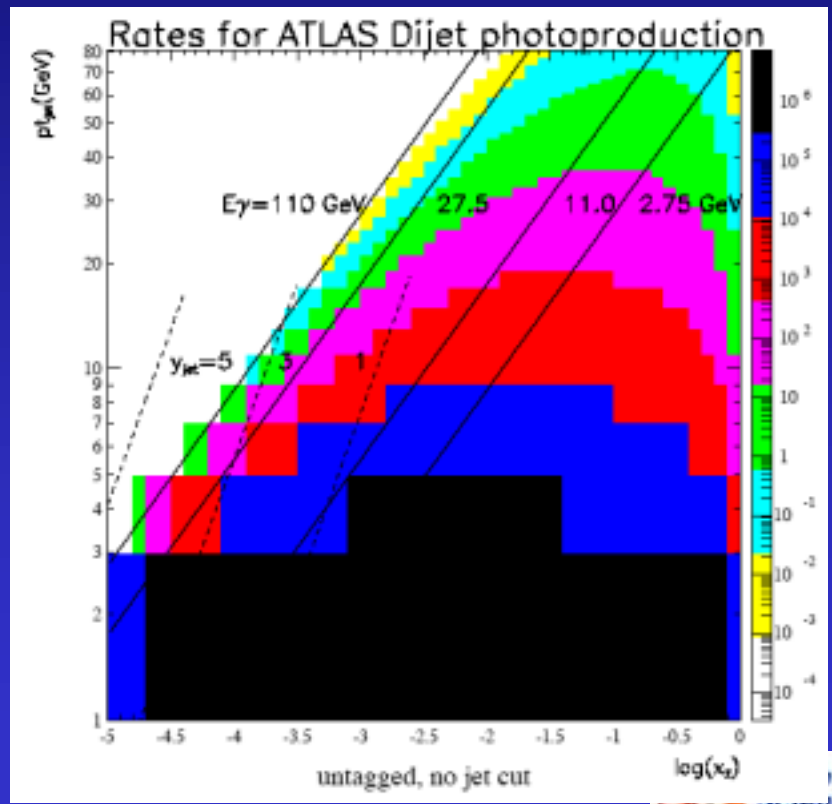

ZDC budget request

ZDC Calorimeter Construction

Constant FY 05 $k

	FY 05	FY06	FY07	Total
Pre-R&D				
R&D	50			50
CDR				
PED/EDIA	25	50		75
Construction		300	75	375
Preops				
TEC	25	350	75	450
TPC	75	350	75	500
Planned redirect				
Needed New Funds (TPC-redirect)	75	350	75	500

It may be possible to lower this cost even further. Under study.

CERN view of ATLAS-HI

- LHCC (LHC Committee):
  - "encourages the ATLAS Collaboration to continue their studies for heavy ion physics with a view to submitting a Physics Performance Report." - May 2004
- Hermann Schmickler, CERN-AB-BDI-GL
  - w/ S. White: "On the Potential Use of Zero-Degree Calorimetry for LHC Luminosity Monitoring", LARP Meeting, Port Jefferson, NY - April 2005
  - Glossary:
    - AB = Accelerators and Beams Dept.
    - BDI= Beam Diagnostics & Instrumentation
    - GL = Group Leader
    - LARP = U.S. LHC Accelerator Research Program

Atlas Heavy Ions (11/2004)

- European
  - LHEP
  - U. Bern
  - CERN
  - Lebedev Institute
  - INFN
  - IPNP - Prague
  - UF -Rio de Janeiro
  - U. Geneva
  - INP - Cracow (PHOBOS)
- United States
  - BNL Physics (NP+HEP)
  - Colorado
  - Columbia
  - (LBNL)

Strong U.S. group already!

NP: Cole, Nagle, White

Assemegan, Gordon, Nevski, Takai & many more

Atlas Heavy Ions (7/2005)

- European
  - **LHEP**
  - **U. Bern**
  - **CERN**
  - **Lebedev Institute**
  - **INFN**
  - **IPNP - Prague**
  - **UF -Rio de Janeiro**
  - **U. Geneva**
  - **INP - Cracow (PHOBOS)**
- United States
  - **BNL Physics (NP+HEP)**
  - **Colorado**
  - **Columbia**
  - **(LBNL)**
  - BNL Chemistry
  - SBU Chemistry
  - Interested:
    - SBU Physics

ATLAS HI Summary
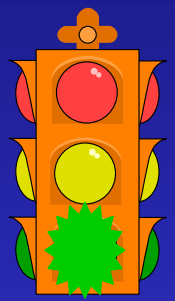
- ATLAS is ideal for studying jets & quarkonia
  - high granularity of the calorimeter
  - external muon spectrometer
  - Si vertex detector availability on day 1
- Very leveraged investment
  - Collaboration requirements on DOE-NP are minimal
    - manpower for triggering & physics analysis
    - some computing resources
    - ZDC desired, but not required by collaboration
  - Strong U.S.ATLAS (HEP) group in proximity to RHIC
- U.S. ATLAS-HI Collaboration is healthy and growing
- Lots of work & great physics ahead!