RF Systems

James Rose, Radio Frequency Group Leader

NSLS-II ASAC Review

March 26, 2009

Office of Science
U.S. DEPARTMENT OF ENERGY

BROOKHAVEN NATIONAL LABORATORY
BROOKHAVEN SCIENCE ASSOCIATES

Outline

- Introduction
- Linac
  - Linac Front End
  - Linac
- Booster
  - Cavity
  - Transmitter
- Storage Ring
  - 500 MHz SRF cavity
  - 300 kW RF transmitter
  - 1500 MHz Landau cavity
  - Cryogenic system
- Conclusions

RF Phase, Energy Stability Requirements

Guo, Carr, Krinksy, Rose PAC 2007

$$\sigma_\delta = \sqrt{\frac{1}{2}\left(\frac{\Delta p}{p}\right)^2 + \sigma_{\delta,0}^2} = \sqrt{1+\frac{1}{2}f^2\sigma_{\delta,0}}$$

$$f = (\Delta p/p)/\sigma_{\delta,0}$$

$$\sigma_{y'}^2 = \frac{\lambda_n}{2L}\sqrt{1+16n^2N_w^2\sigma_\delta^2} + \varepsilon_y/\beta_y$$

$$y = y_0 + \eta_y\langle\delta\rangle$$

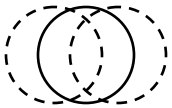

	$\Delta\varphi$ (deg)	$d\delta$ ($\times 10^{-4}$)
Centroid jitter due to Residual dispersion (ID's)	0.81	3
Vertical Divergence (from momentum jitter)	2.4	9
Dipole, TPW (position stability due to momentum jitter)	0.27	1
Timing experiments (5% of 15ps bunch @>500Hz)	0.14	0.5

Klystron RF Feedback Loop

- Klystron RF stability vs. DC supply: TH2161B
  - RF phase variation vs. beam voltage (constant mod. Anode voltage) 12 degrees/% ! Twelve degrees per percent anode variation !
  - RF power vs. beam voltage 0.2dB/%
- PSM power supply typical performance (54kV,12A)
  - Full range < 1% pk-pk
  - 75V from 1kHz-2kHz (0.1%) = 1.2 degrees
  - 15V from 2kHz-4kHz
  - 3V from 4kHz-12kHz
  - 50V for >12kHz

This is limiting factor in APS, ~1 degree phase jitter after feedback using mod-anode

Need phase feedback!

NSLS-II RF VOLTAGE, POWER REQUIREMENTS

	Baseline Capability with 2 RF Cavity Systems Required Voltage 3.3 MV		Fully Build-out Capability with 4 RF Cavity Systems Required Voltage 5 MV	
	#	P(kW)	#	P(kW)
Dipole	60	144	60	144
Damping wiggler	3 (21 m)	259	8 (56m)	517
Cryogenic-PMU	3	76	6	127
EPU	2	33	4	66
Additional devices	~7	120	~10	200
TOTAL		529		1003
Available RF Power		540		1080

Beam Loading parameters

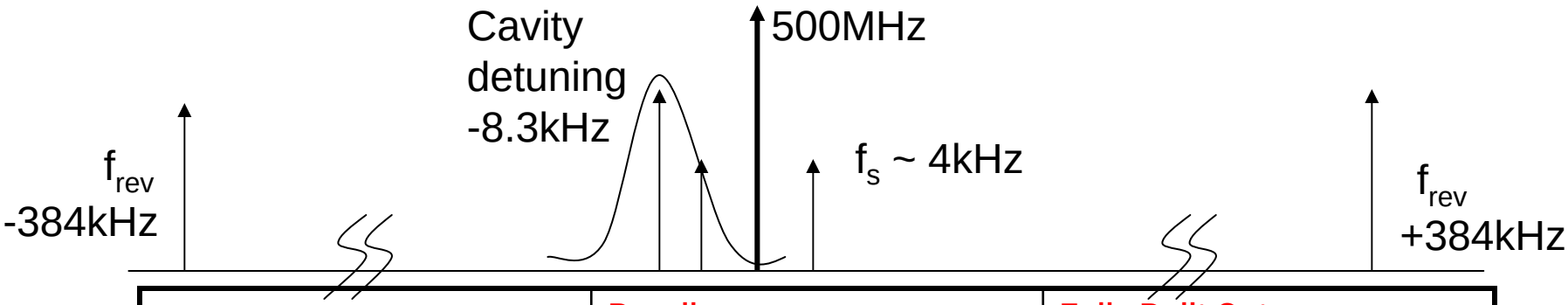

	Baseline	Fully Built Out
R/Q	44.5	44.5
Q_0	$7.5*10^8$	$7.5*10^8$
Revolution Frequency	384 kHz	384 kHz
Total V	3.3 M	4.9 MV
Synchrotron Frequency	3 kHz	4 kHz
Number of cavities	2	4
Q_L*	$1.2*10^5$	$6.7*10^4$
Bandwidth (FWHM)	4 kHz	7.4 kHz
Frequency detuning	-6.4 kHz	-8.3 kHz
* Q_L ~ 86k for minimum reflected power over all phases (preliminary)		

Technical Requirements & Specifications

- 200 MeV LINAC 15nC, 1% total energy spread
- Booster RF System: Petra cavity delivering 1.2 MV for 0.7% acceptance powered by 80 kW IOT amplifier capable of accelerating 10nC charge
- Storage Ring 500 MHz System: SCRF cavity delivering 2.5MV powered by 300kW klystron amplifier capable of storing 300mA with feedback incorporated in a digital RF cavity controller
- SR 1500 MHz Passive SCRF Landau Cavity: 1MV field @+90deg for bunch lengthening, excited by beam
- Liquid Helium Refrigerator System: 850+ Watts at 4.5K for meeting requirements of four 500MHz and two 1500MHz cavities (fully built out system)

Progress since Last ASAC meeting: LINAC

- Commercial Turn Key Systems: SLS, DIAMOND, SOLEIL, ASP, ALBA
- NSLS-II Requirements Close to SOLEIL's, however we are pushing current, energy spread: Front end early delivery to develop flexible bunch pattern modulation of gun
- Beam loading along 15 nC 224 ns bunch train is ~2.5 MeV in 1st structure, compensated by injecting during field risetime at expense of energy gain

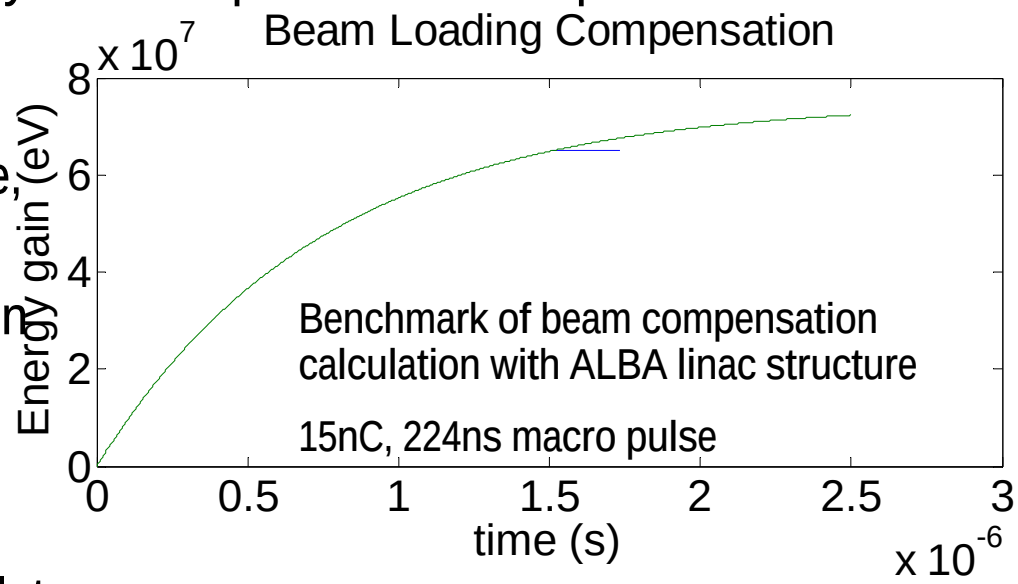

- Procurement documents nearly complete
- Single contract with two phases, possibly (likely?) combined to a single phase if funding available

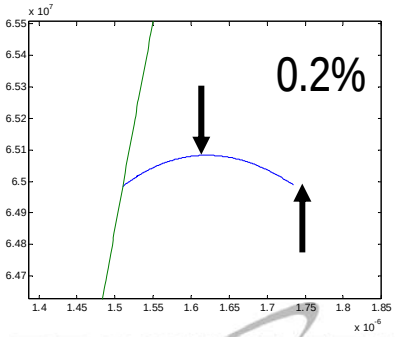

ALBA

Booster RF

- Booster energy: 200MeV →3 GeV
- RF frequency: 500 MHz
- Repetition rate: 1 Hz
- Beam current: 28 mA (15 nC circulating charge)
- Energy loss per turn: 625 keV
- Energy acceptance: 0.7% at 3 GeV → 1.2 MV booster RF voltage = 36 kW cavity power for 7-cell cavity
- Momentum compaction: 0.0072
- Synchrotron frequency: 20 kHz
- Beam current = 28 mA → Beam power 18 kW
- Total pwer requirement ~54 kW for PETRA-type 7 cell RF cavity

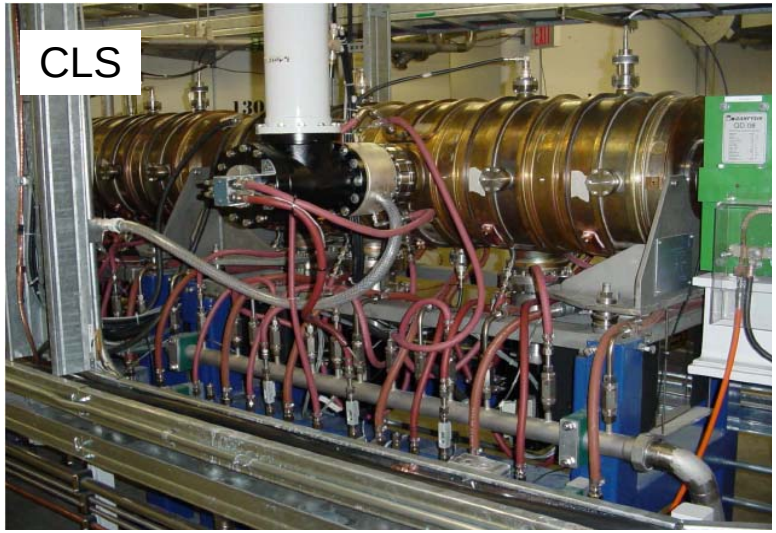

BOOSTER RF SYSTEMS

- Decision to use DESY 7-cell PETRA type cavity with spare
- Cavity installed in laboratory, coupling set. Development of coaxial high power transition in process.

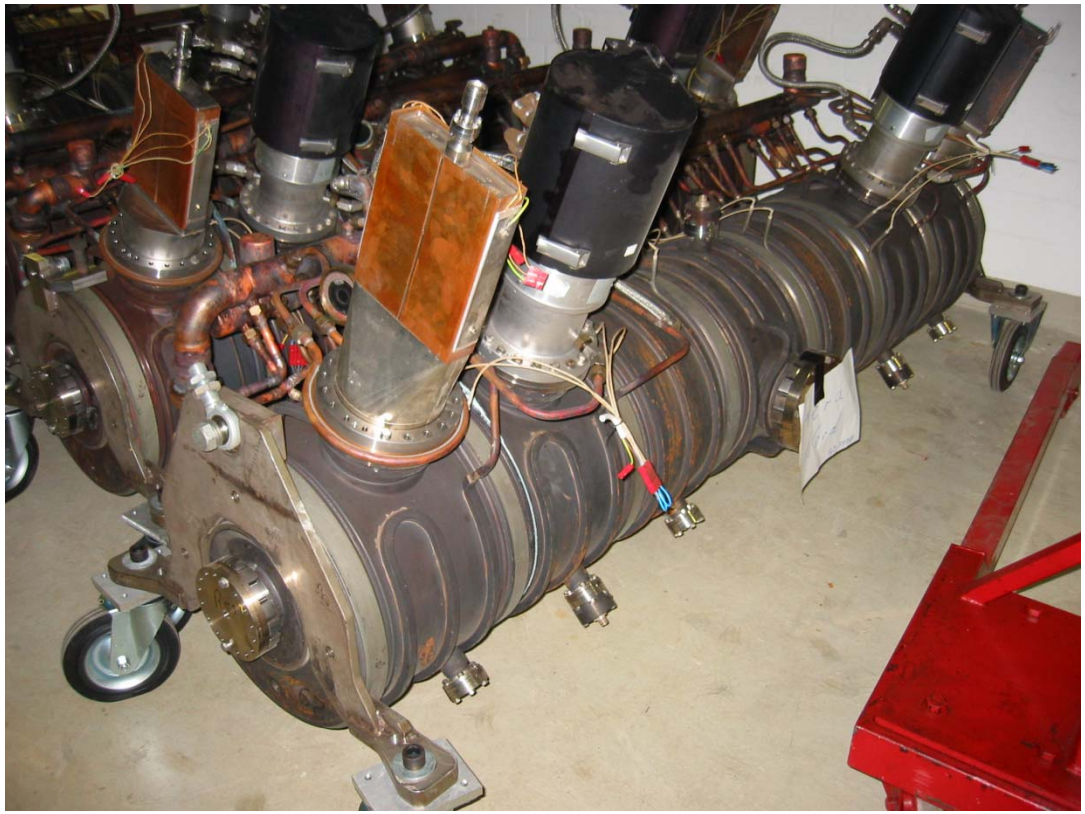

Early availability allows head start of modifications to cavity tuner electronics, power coupler and near-term test of cavity controller. Allows more level manpower loading: Finish before delivery of storage ring systems.

NSLS-II Booster Cavity in RF Laboratory

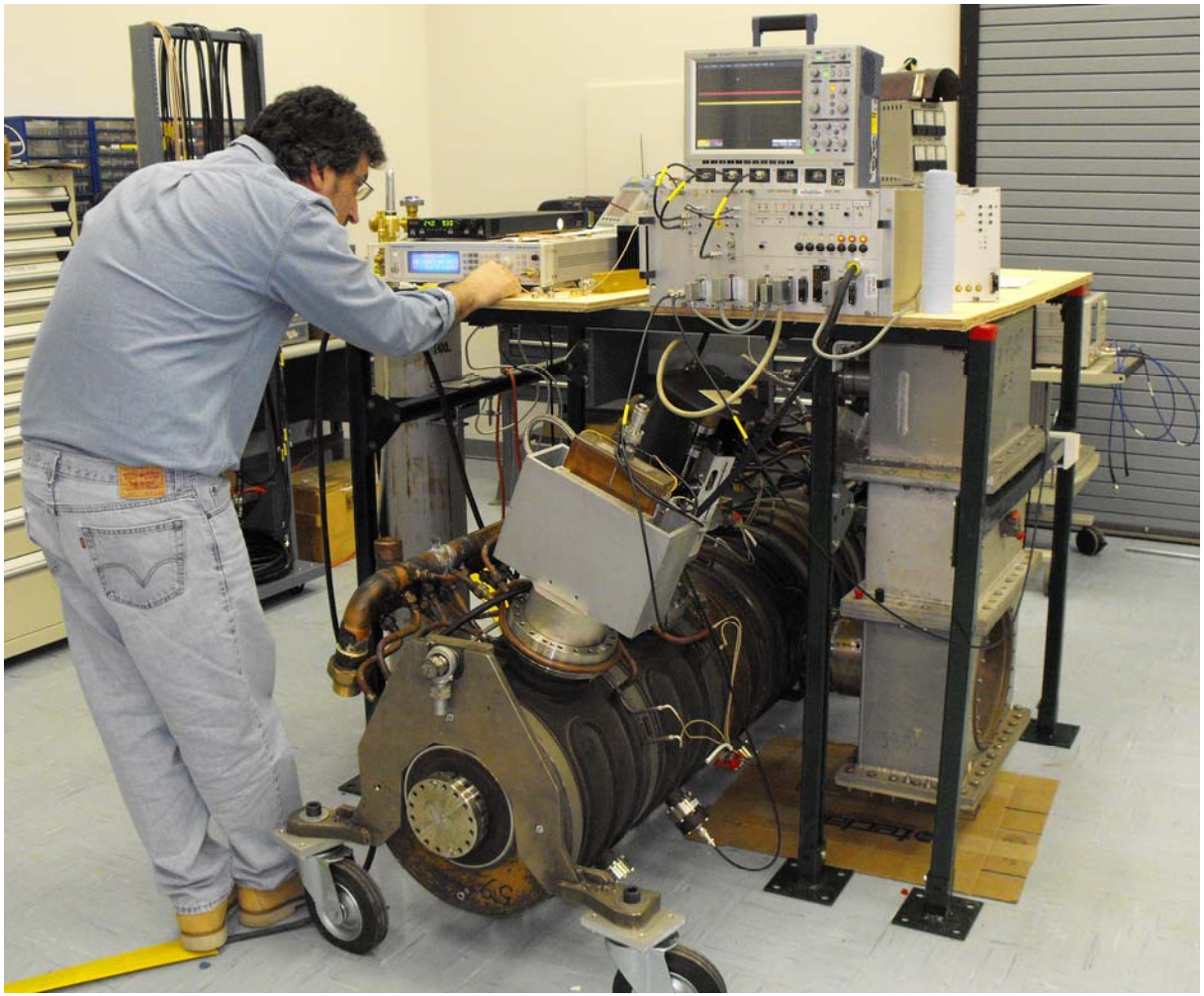

Waveguide-coupling loop transition installed, loop coupling adjusted to be critical coupled to copper losses at 1.2MV, beam loading at 3 GeV, 15 nC. Drawings for coaxial line feed being evaluated.

DESY electronics for tuning loop installed and being commissioned: Decide what functions to keep and what to design into digital controller after original is working

BOOSTER 500 MHz Transmitter

- Booster 7 cell cavity well matched to 80 kW IOT amplifier
- Several commercial IOT tube vendors/ broadcast transmitter
- Tube manufacturers have designed 90 kW IOT□s for scientific community: better matched to cavity loads
- Performance exceeds specification of 1.2 MV and synchrotron losses for 10 nC at 3 GeV, allowing flexibility operations

	3.0 GeV		3.15 GeV	
	10 nC	15 nC	10 nC	15 nC
1.2 MV	47.9 kW	53.8 kW	50.5 kW	57.7 kW
1.3 MV	53.9 kW	59.8 kW	56.5 kW	63.7 kW
1.4 MV	60.9 kW	66.8 kW	63.5 kW	70.7 kW
1.5 MV	67.9 kW	73.8 kW	70.5 kW	77.7 kW

Assuming 10% transmission losses and 10% tube degradation ~64kW available from transmitter

MatLAB Modeling of Storage Ring RF-Beam Interaction

Model necessary to answer questions on phase and amplitude stability of beam in presence of feedback loops, jitter due to DC power supply variations

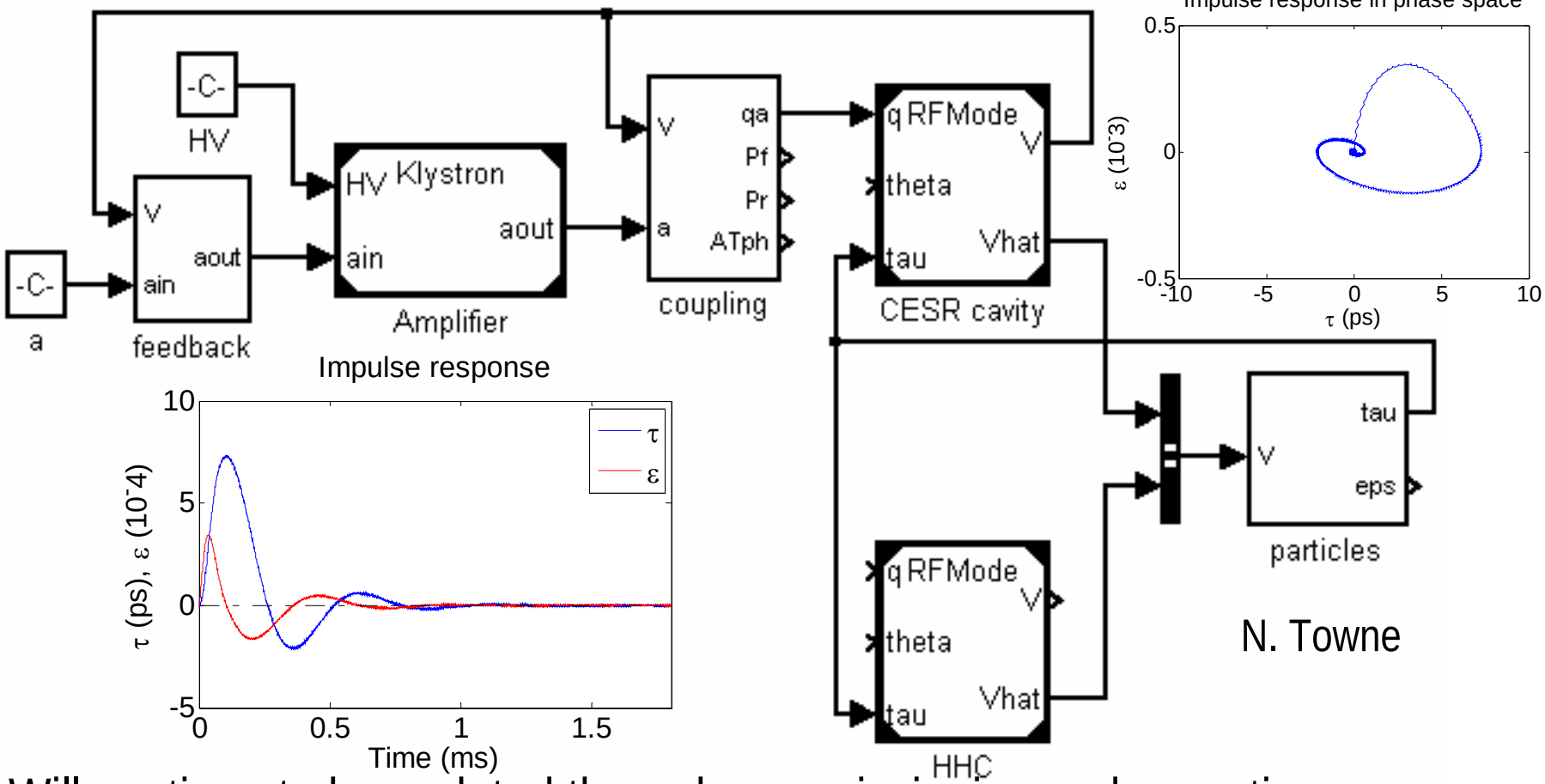

N. Towne

Will continue to be updated through commissioning and operations

Closed-loop un-stretched response functions

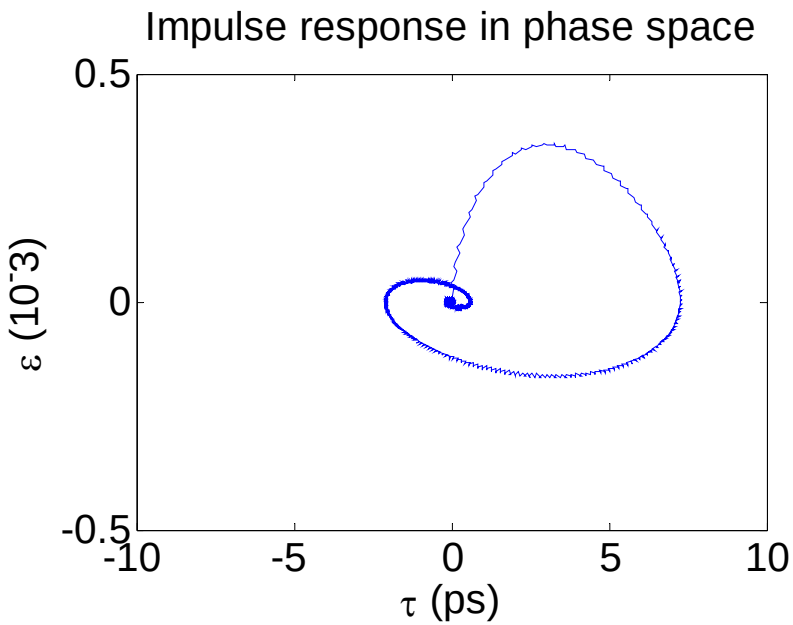

Impulse in amplitude or phase is applied to the RF input to the cavity

Rigid bunch model of beam reacts to impulse and acts back on cavity fields

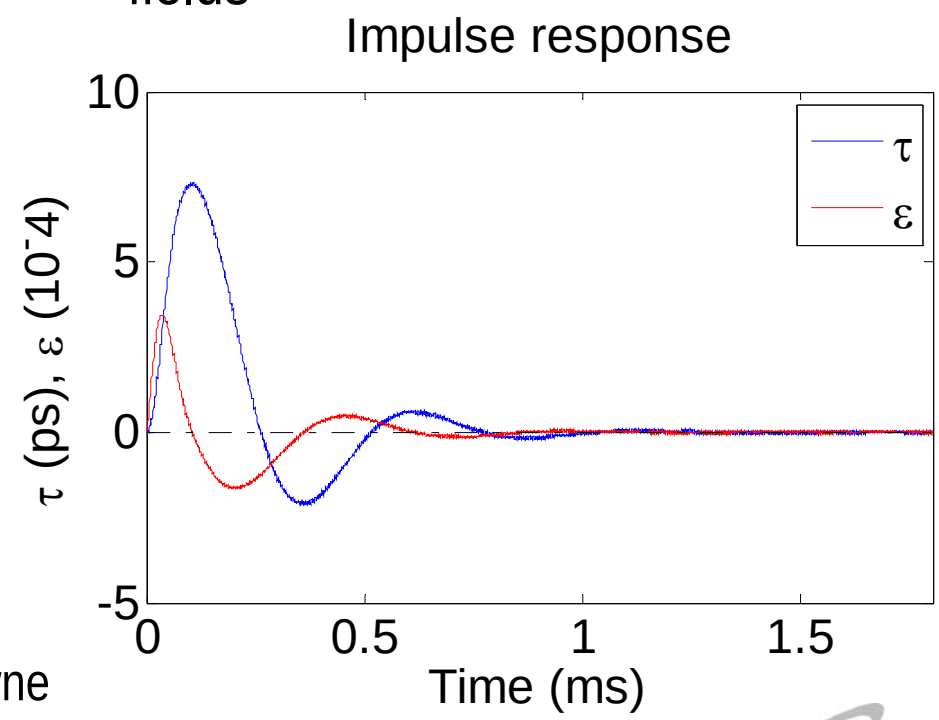

Here the feedback is direct RF feedback hand tuned to provide Robinson reactive beam stability. Impulse response is subsequently used to derive beam transfer functions

N. Towne

Matlab model synthesis

Full model used for linearization

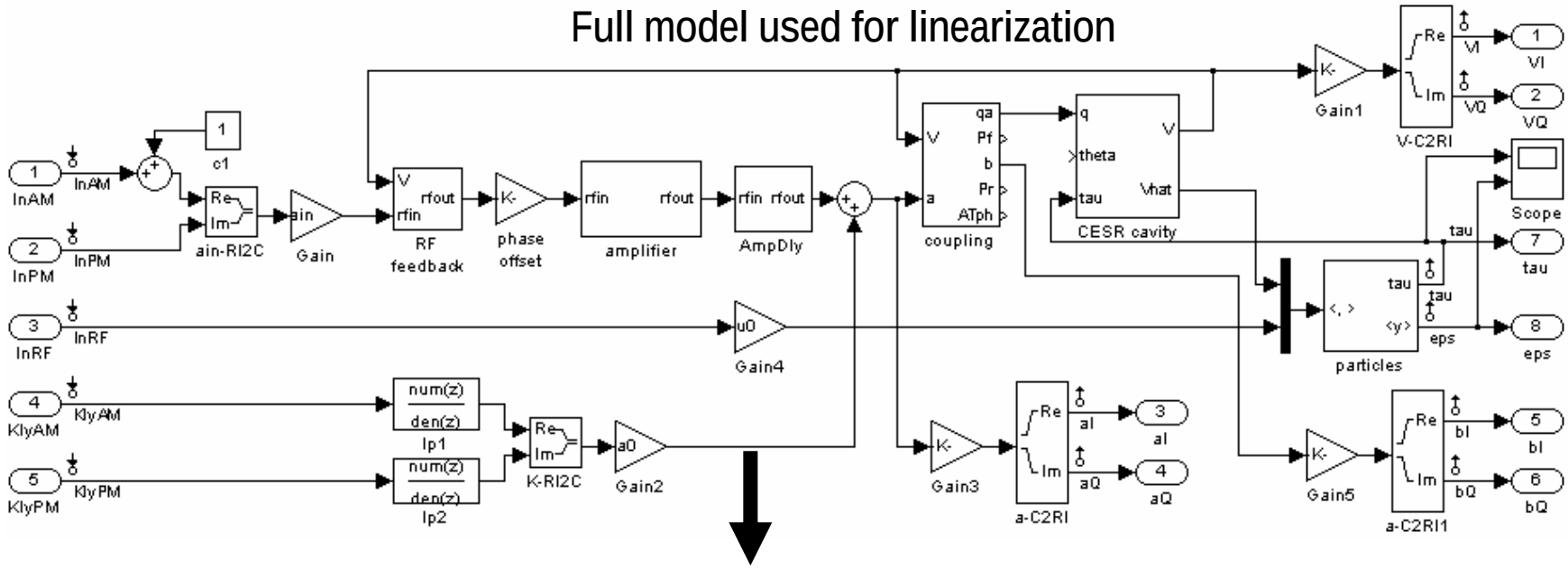

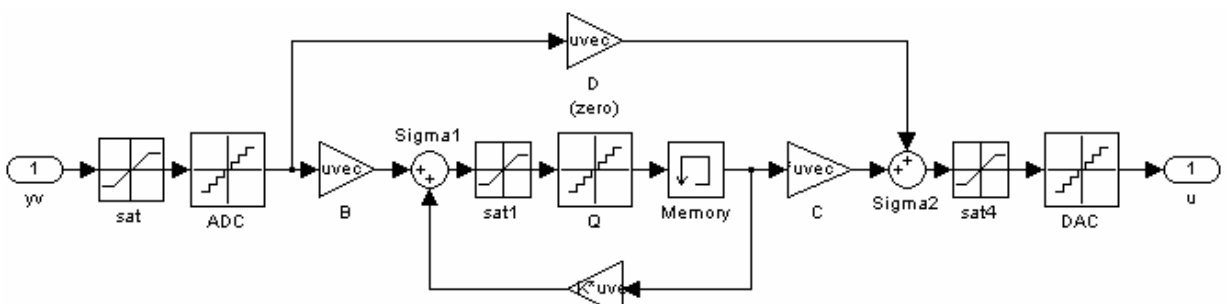

Fixed point state-space model showing saturation and quantizer blocks.

LQG Controller implementation as call from digital PI controller

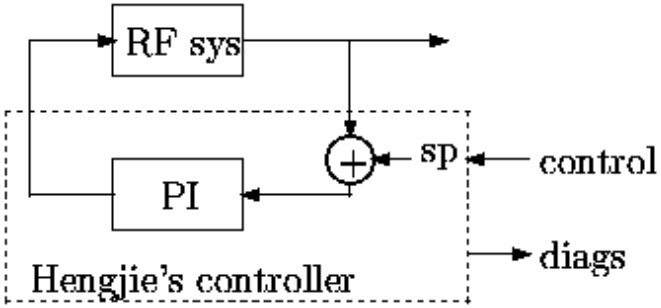

Proportional-integral Controller

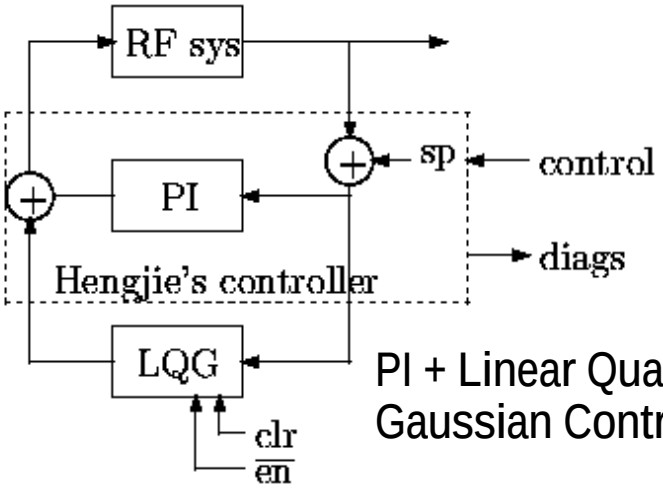

PI + Linear Quadratic Gaussian Controller

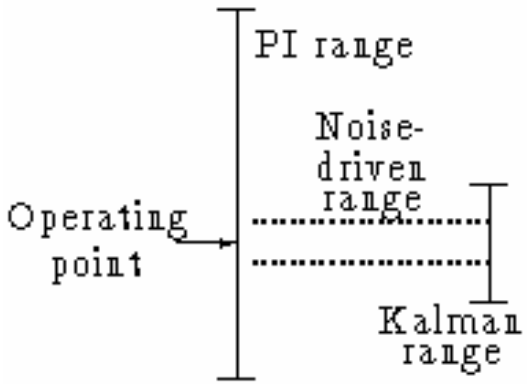

PI controller is used for injection, setup. LQG controller enabled during machine store, PI restored during fault, upset conditions

Controller	σ_τ (deg)	(σ_ε) x10^{-3}
None	1.4	0.33
FP LQG	0.017	0.015
PI	0.40	0.15

NSLS-II technote #53: Design of a Linear-Quadratic-Gaussian Controller for a Single-Cavity Rigid-Bunch RF-System - N. Towne

Cavity Controller Prototype Board Working! Sine input, Sine output

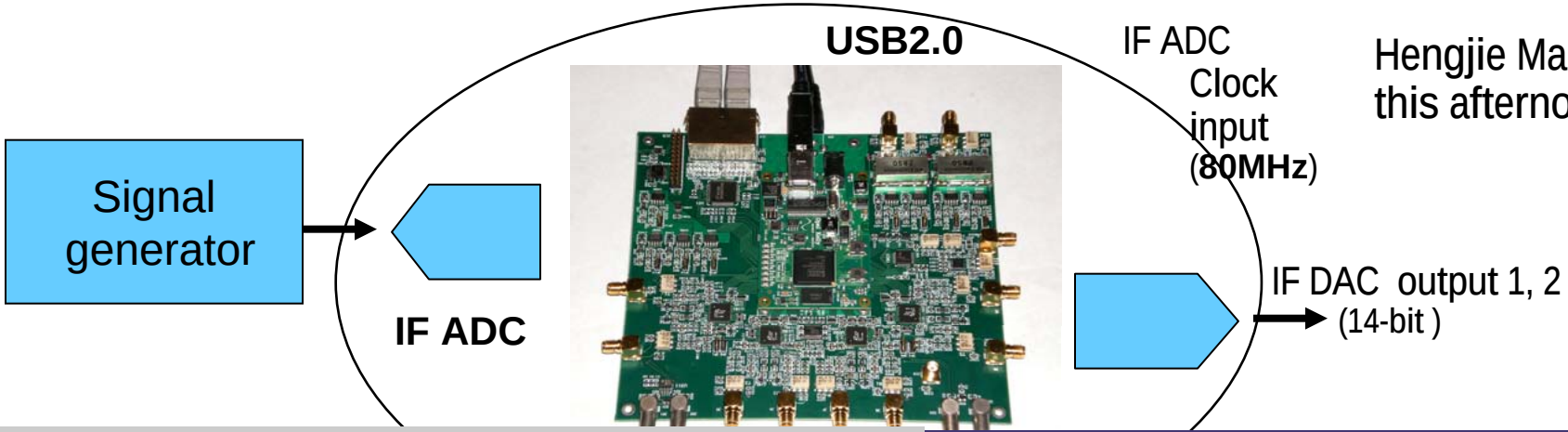

Hengjie Ma's talk this afternoon

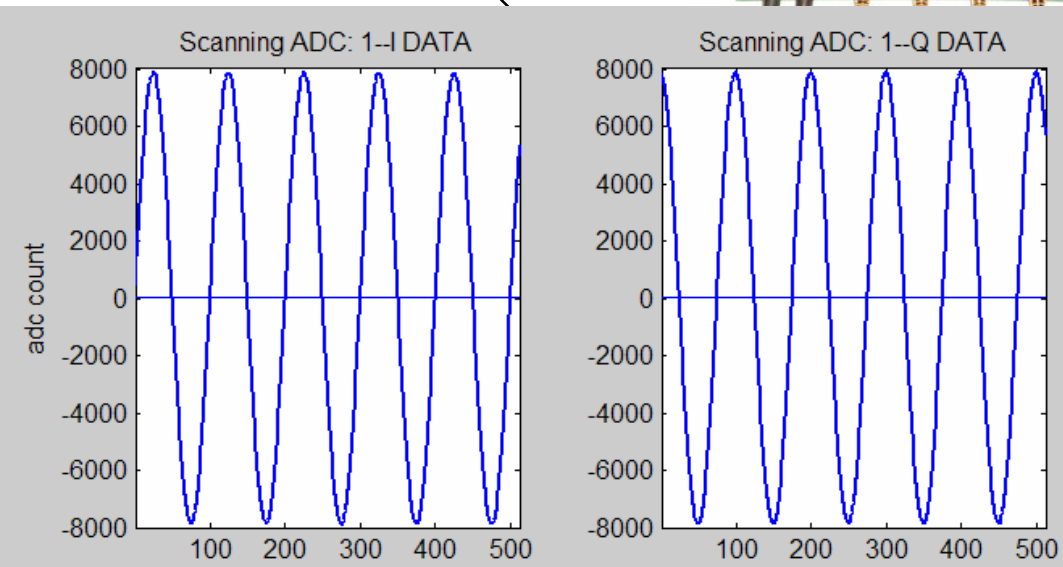

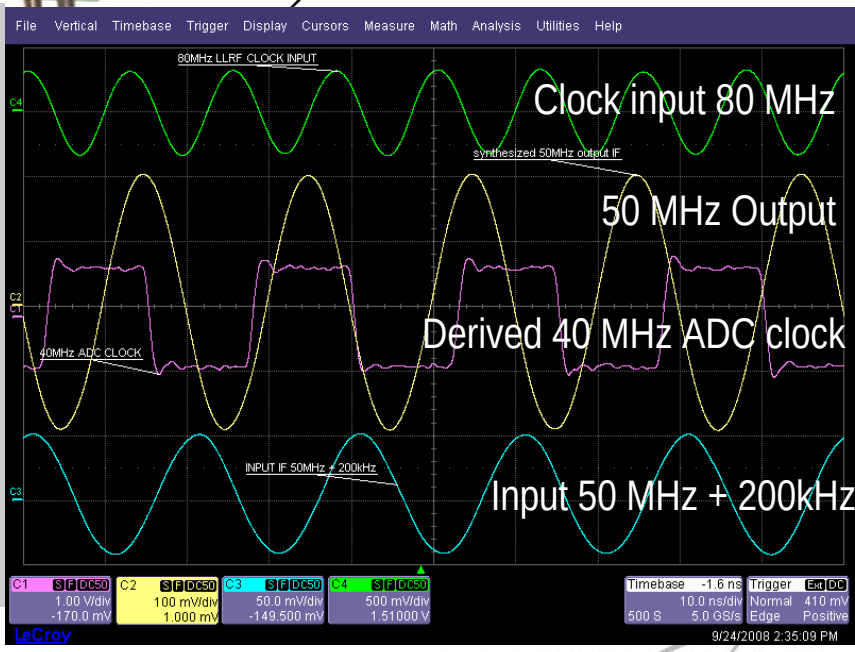

MATLAB API reading 14 bit ADC data through USB port

Storage Ring Cavity

- CESR-B Cavity baseline: Commercially produced, 12 in service in storage rings around the world
- KEK-B Cavity as option: 500MHz version installed at BEPC-II, working with KEK and industry to produce cavities for NSLS-II
- Both are highly damped HOM free cavities: CB instabilities unconditionally stable
- Conventional facilities layout is compatible with both cavities, all RF / Cryo tunnel feed-throughs are in the conventional facility design documents
- Two SBIR's in place to develop US vendor for new SCRF cavity for synchrotron light sources: long term strategy for cavities 3,4

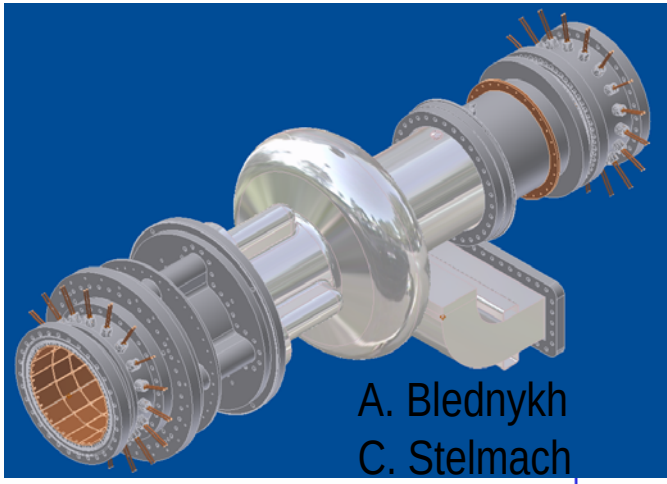

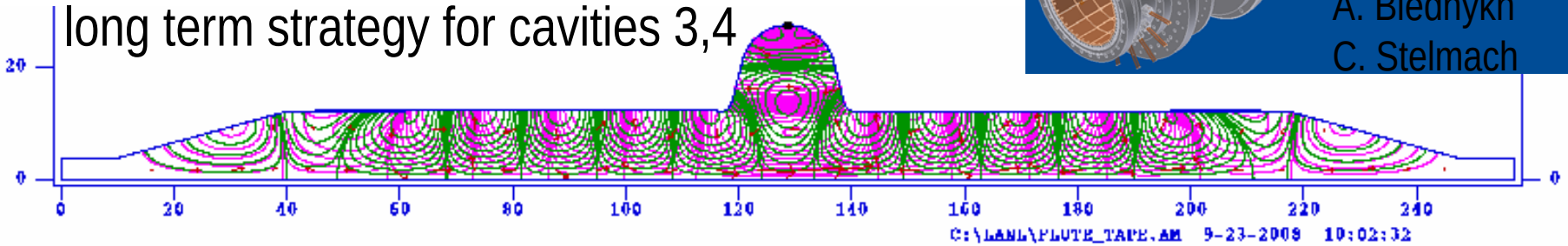

SRF Cavity Pressure Vessel Analysis

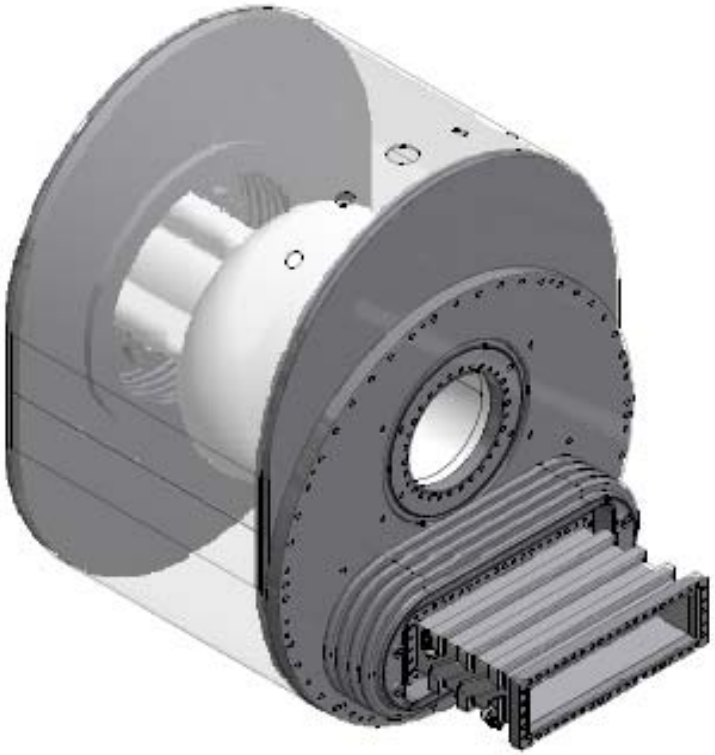

KEK-B cavity is pressure vessel stamped (Japan) Need to get equivalence in US by BNL committee approval

CESR-B cavity can not be ASME stamped: LHe vessel, excluding niobium cavity was stamped by Meyer Tool. Need to get BNL approval for ASME equivalency

Fault analysis→ pressure requirements; 3-D drawing model created for input into ANSYS for stress analysis; full manufacturing procedure to be written: Raw material yield stress, weld procedures and samples, pressure tests.

Need to have BNL safety committee approval for methods before going for RFP: If vendor follows and documents procedure, committee will pass.

“KEK-B-like” cavity development

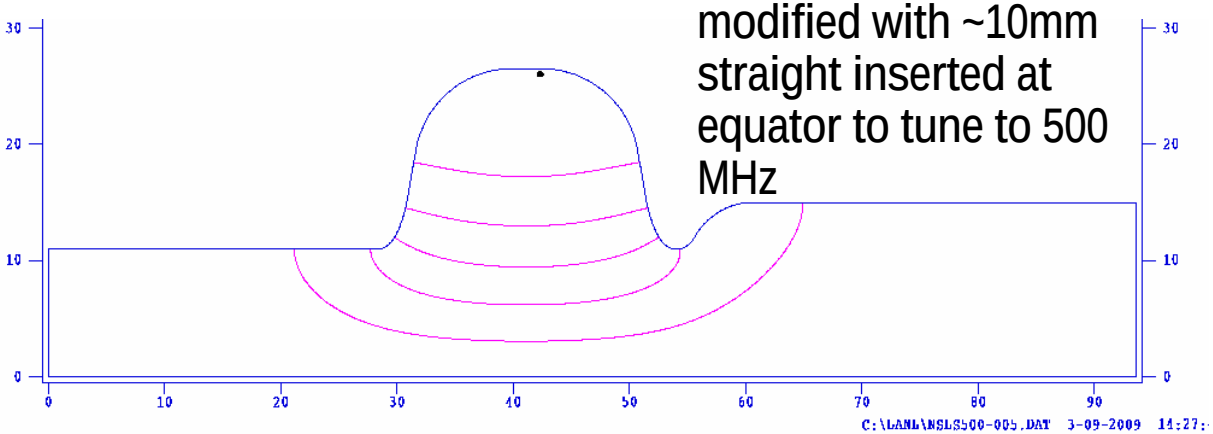

BEPC cavity is KEK-B modified with ~10mm straight inserted at equator to tune to 500 MHz

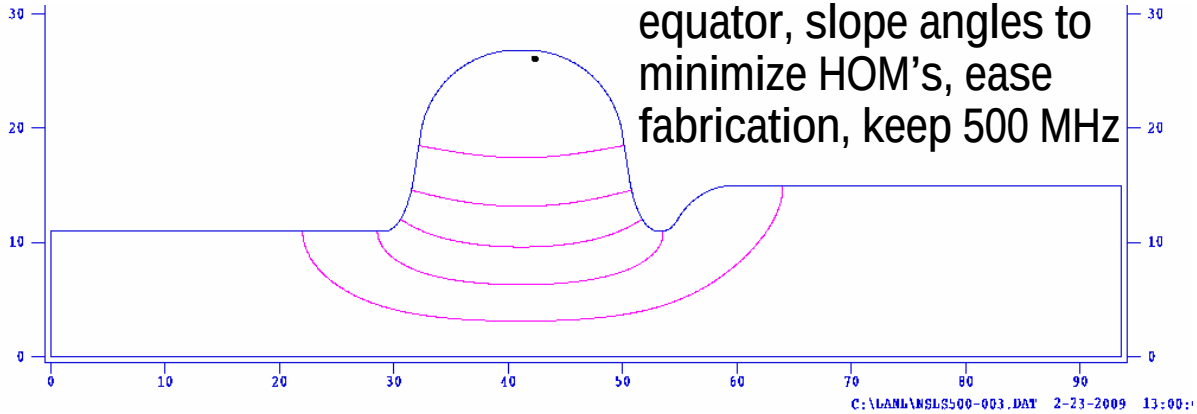

NSLS-II cavity studies vary radius, straight at equator, slope angles to minimize HOM’s, ease fabrication, keep 500 MHz

KEK-B is 508 MHz

BEPC-II has 500 MHz version

-KEK-MELCO design

HOM’s factor of ~2 higher than KEK-B

Work has been started in developing low HOM 500 MHz NSLS-II cavity to be manufactured by MHI with KEK testing

MHI already manufacturers antennae coupler: reduces high risk item.

Progression from KEK-B to NSLS-II: monopole

Takeshi Yanagisawa

KEK508	full model		
f [MHz]	Q	R/Q [Ω]	R [Ω]
508.99	4.95E+08	46.71	2.31E+10
1022.09	126.7	5.54	7.02E+02
1609.83	548.8	0.50	2.72E+02

BEPC500	full model ferrite to taper = 50mm		
f [MHz]	Q	R/Q [Ω]	R [Ω]
499.97	5.27E+08	47.80	2.52E+10
945.61	128.0	6.30	8.06E+02
1072.06	1115.8	0.65	7.21E+02
1140.39	30.7	3.42	1.05E+02
1534.74	146.9	0.81	1.18E+02

NSLS500-004 ferrite to taper = 50mm			
f [MHz]	Q	R/Q [Ω]	R [Ω]
499.99	4.92E+08	47.78	2.35E+10
1014.39	107.9	3.45	3.72E+02
1060.21	59.2	2.36	1.40E+02

NSLS500-006 ferrite to taper = 50mm			
f [MHz]	Q	R/Q [Ω]	R [Ω]
499.96	5.28E+08	47.83	2.52E+10
946.41	139.5	6.53	9.11E+02
1538.02	239.6	1.53	3.67E+02

Progression from KEK-B to NSLS-II: dipole

Takeshi Yanagisawa

KEK508 full model			
f [MHz]	Q	R/Q [Ω/cm]	R [Ω/m]
606.64	225.2	0.04337	9.77E+02
649.41	96.1	0.25524	2.45E+03
687.68	1014.9	0.52013	5.28E+04
707.16	215.7	1.54075	3.32E+04
1100.82	174.7	0.10314	1.80E+03
1134.51	63.6	0.14744	9.38E+02
1193.30	66.4	0.18268	1.21E+03
1679.06	748.4	0.01594	1.19E+03

NSLS500-004 full model ferrite to taper = 50mm			
f [MHz]	Q	R/Q [Ω/cm]	R [Ω/m]
606.55	240.0	0.04701	1.13E+03
648.02	119.5	0.32194	3.85E+03
685.91	161.0	1.41473	2.28E+04
707.30	60.8	0.66338	4.03E+03
1099.40	250.2	0.07707	1.93E+03
1116.42	142.0	0.17728	2.52E+03
1678.37	3791.2	0.01003	3.80E+03

BEPC500 full model ferrite to taper = 50mm			
f [MHz]	Q	R/Q [Ω/cm]	R [Ω/m]
605.68	284.1	0.08963	2.55E+03
633.00	195.7	0.33550	6.56E+03
683.67	67.1	0.85406	5.73E+03
711.25	80.8	0.71160	5.75E+03
824.76	237.2	0.03505	8.31E+02
1083.25	270.8	0.09020	2.44E+03
1111.69	110.5	0.15588	1.72E+03
1676.36	862.0	0.01538	1.33E+03
1680.95	1862.6	0.12156	2.26E+04

NSLS500-006 full model ferrite to taper = 50mm			
f [MHz]	Q	R/Q [Ω/cm]	R [Ω/m]
605.36	287.6	0.08349	2.40E+03
633.09	200.8	0.33493	6.73E+03
682.39	62.8	0.77945	4.89E+03
709.18	79.9	0.80216	6.41E+03
1086.69	342.6	0.12180	4.17E+03
1108.19	108.9	0.13541	1.48E+03
1663.05	1950.2	0.00638	1.25E+03
1683.80	789.2	0.12644	9.98E+03

SR RF 500 MHz TRANSMITTER

- 300 kW Klystron amplifier with switching power supply base-lined: established at CLS, BEPC, Shanghai
- Tight tolerances on RF amplitude and phase requires phase feedback around klystron
- Combined IOT's as option: inherently lower phase jitter vs. anode voltage simplifies feedback loops, increased number of vendors supplying tubes.
- Both systems compatible with conventional facilities layout
- Solid state systems considered for systems 3 and 4: R&D plan in place, but not started yet
- SS amplifier may be bid by industry

PSM power supply with 300 kW klystron at BECP

Bunch Lengthening: A Landau or Touschek cavity?

- Harmonic cavity is required to lengthen the bunches to decrease charge density thereby increasing Touschek lifetime

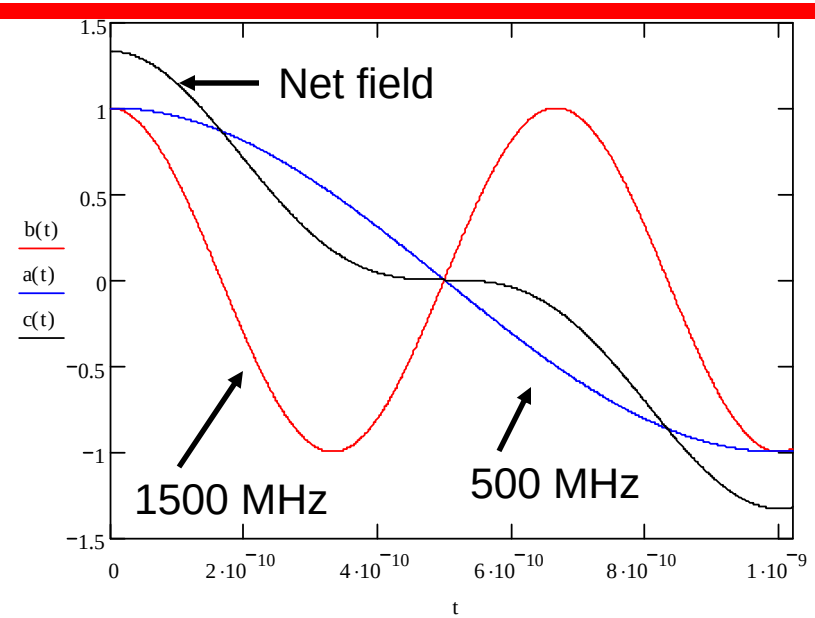

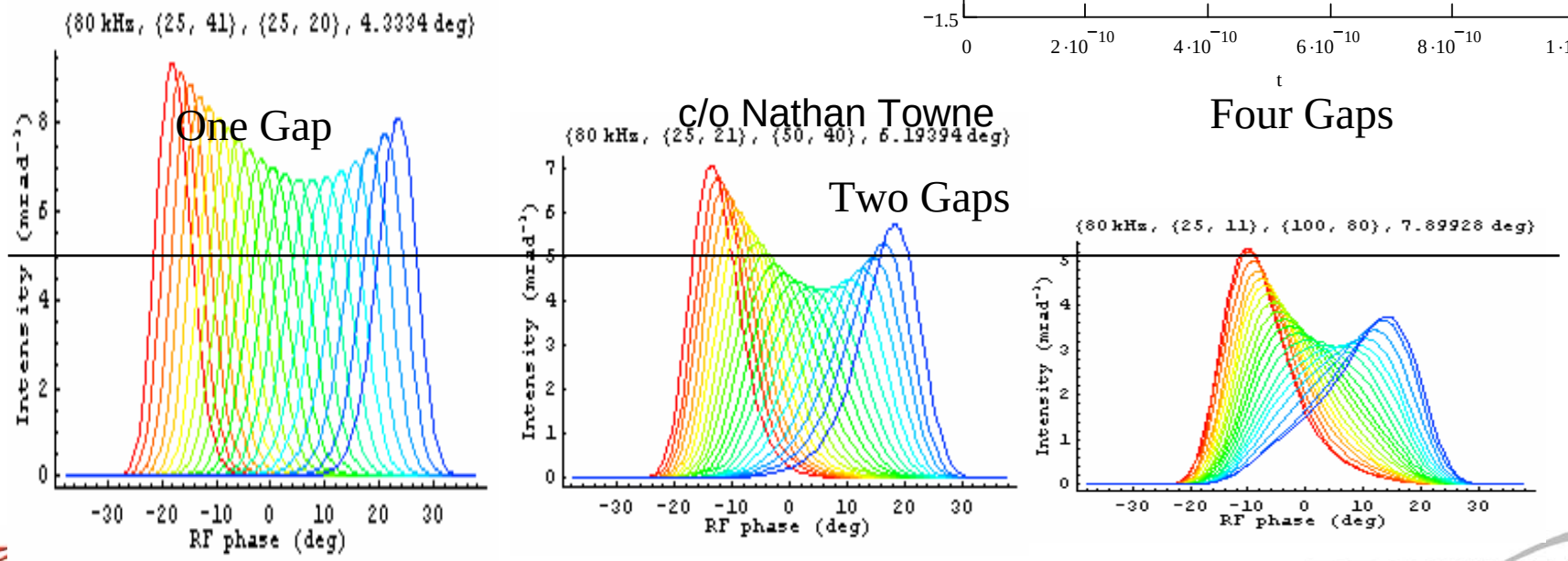

Passive Landau Cavity

- Monitoring industries' efforts to commercialize Super3HC cavity
- Collaborating with US industry to produce passive two cell SCRF 1500 MHz cavity in a SBIR

SBIR initial results promising:

More compact, better damping than Super3HC

Not needed until 2015, ample time for development

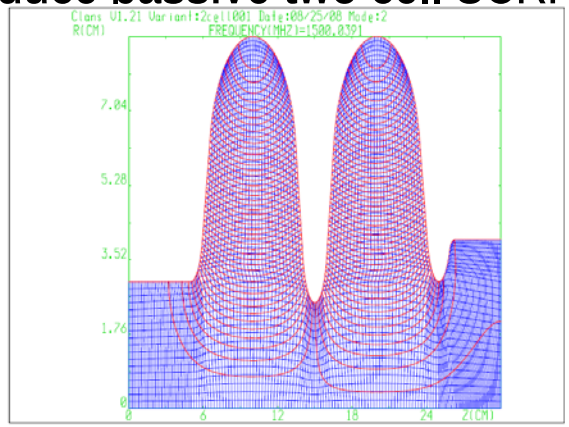

Early, asymmetric design

T. Yanagisawa

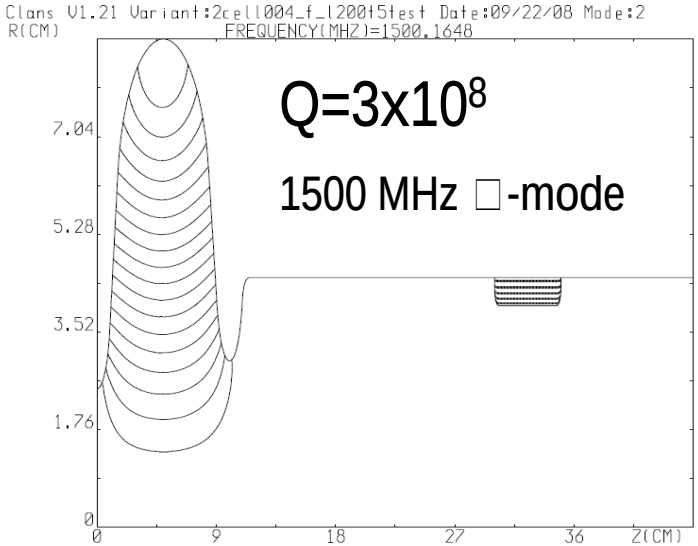

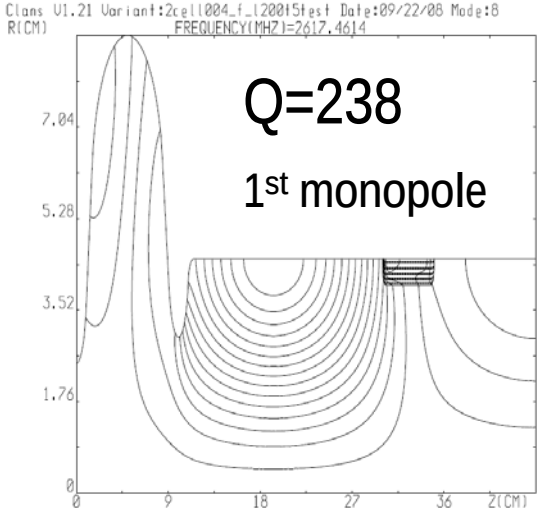

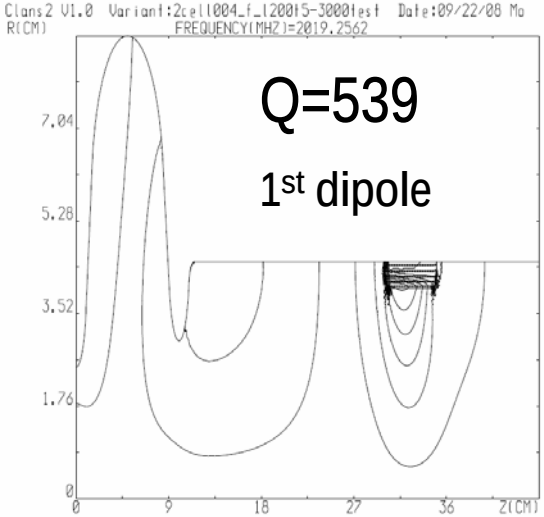

Cavity design – fundamental mode parameters and zero-mode R/Q

T. Yanagisawa

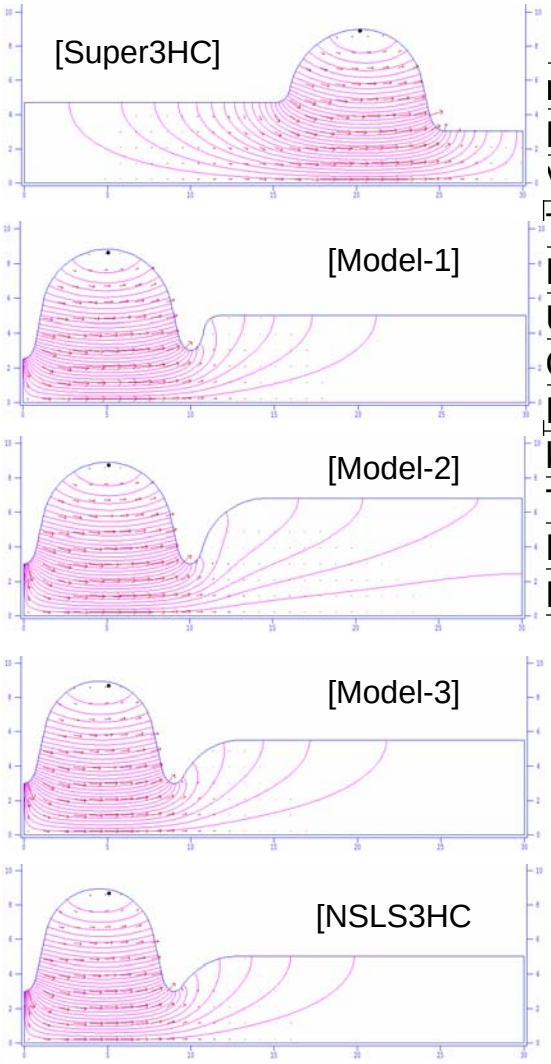

name		Super3HC	Model-1	Model-2	Model-3	NSLS3HC
Freq(pi)	MHz	1500.07	1500.65	1500.00	1500.07	1500.07
V	MV	0.50	0.50	0.50	0.50	0.50
T	Deg K	4.5	4.5	4.5	4.5	4.5
Pd	W	10.3	7.9	8.4	9.5	9.4
U	J	0.297	0.215	0.231	0.238	0.237
Q		2.72E+08	2.58E+08	2.60E+08	2.37E+08	2.38E+08
R/Q	Ohm	89.3	123.3	115.1	111.3	111.9
k			0.01153	0.02218	0.02471	0.02519
TTF		0.451	0.629	0.612	0.671	0.675
Freq(0)	MHz		1491.97	1483.27	1481.42	1481.06
R/Q (0)	(0-mode)	N/A	?	0.0415	0.033	3.3

Model NSLS3HC has transverse HOM impedances factor 3 lower than Super3HC and zero mode impedance acceptable. Models 2 and 3 look very promising, with HOM impedances comparable to Super3HC, zero-mode impedances lower.

We are certain that there is a compromise solution that exceeds requirements!

Calculation code ; SuperFISH

Niowave Copper Model Drawings

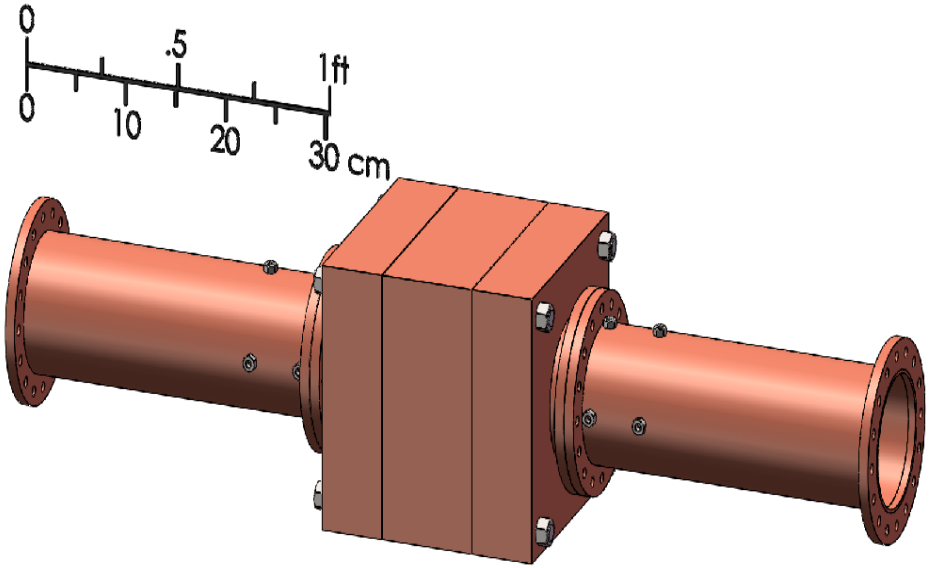

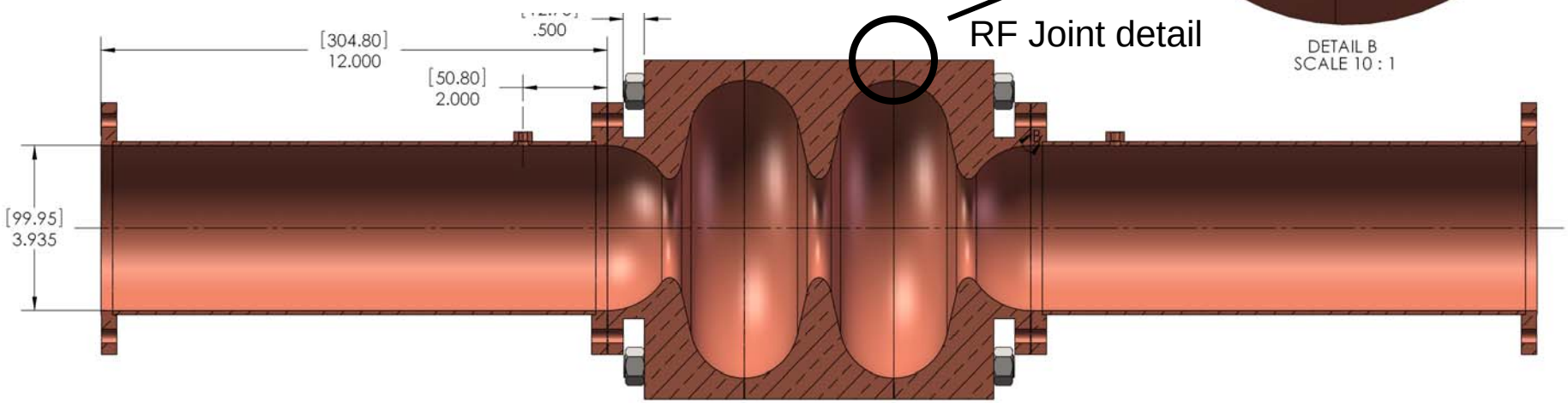

1500 MHz Landau cavity copper model

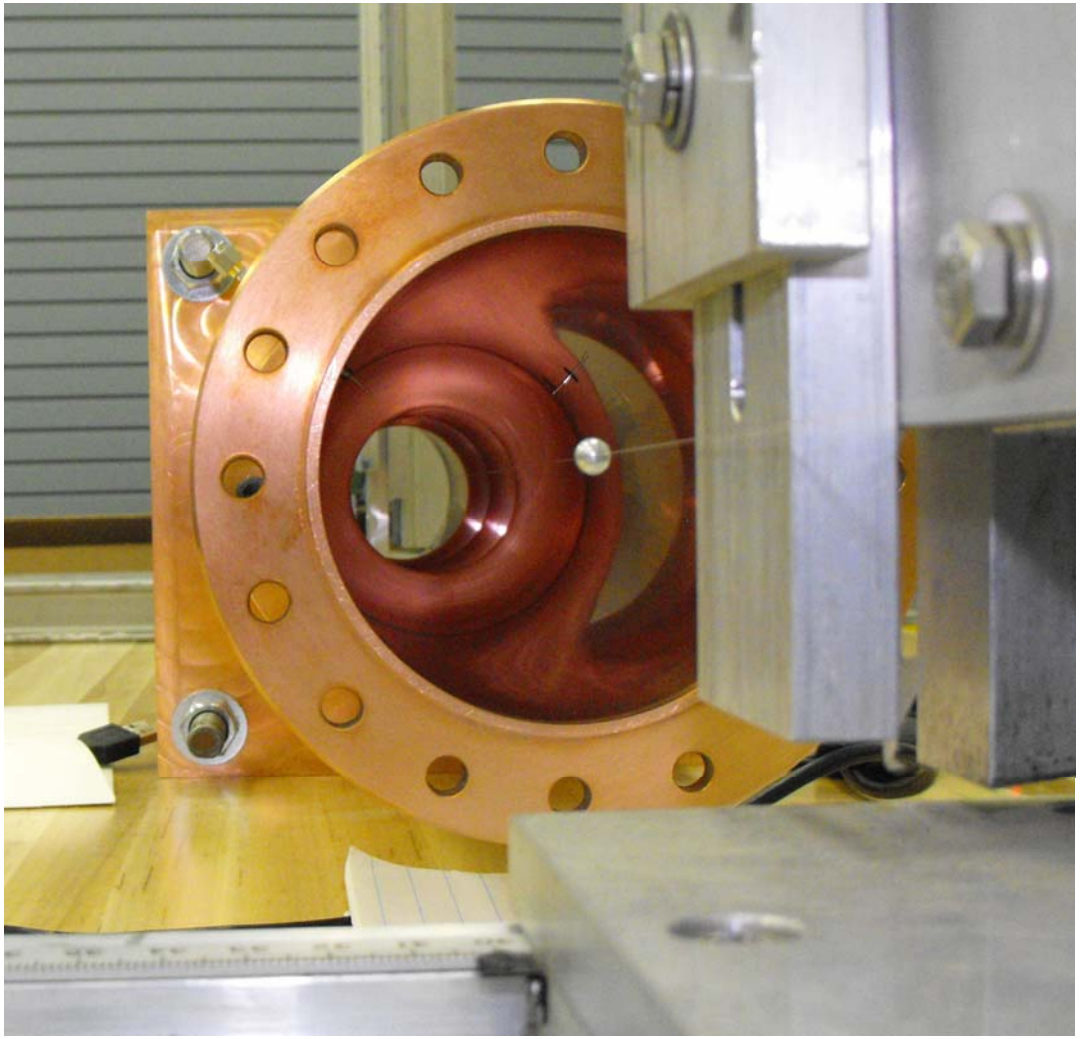

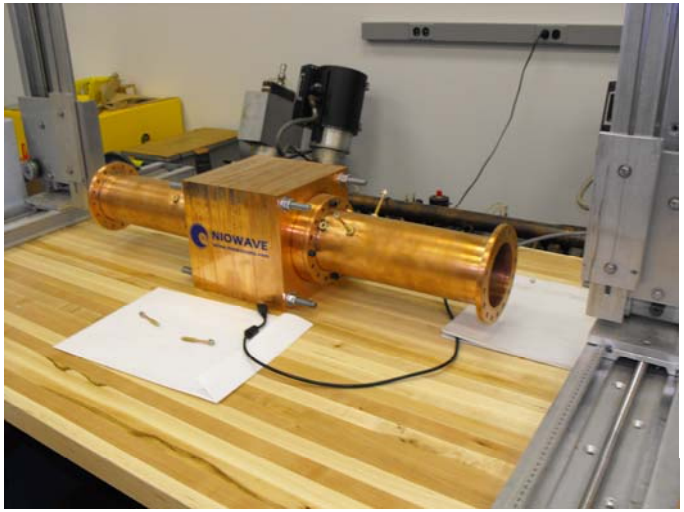

Cavity evaluation in progress including beadpull tests, HOM spectra, mode separation

Cryogenic Systems for SCRF

- Helium Refrigerator ~900 W @ 4.5 deg K
- Significant progress this year, two consulting firms provided preliminary system design (ACT Inc.) and piping layouts (E. Quimby Inc.)
- Preliminary design nearly complete, Final design by industry
- Piping and Installation Diagram (P&ID) completed which includes all major components, piping and valves.
- On basis of P&ID, all cryogenic piping routing has been planned between compressor building, RF building and tunnel
- All tunnel penetrations defined for both CESR-B and KEK-B cavity designs, Super3HC

RF Cryogenic System: Detailed system design; Final design by vendor

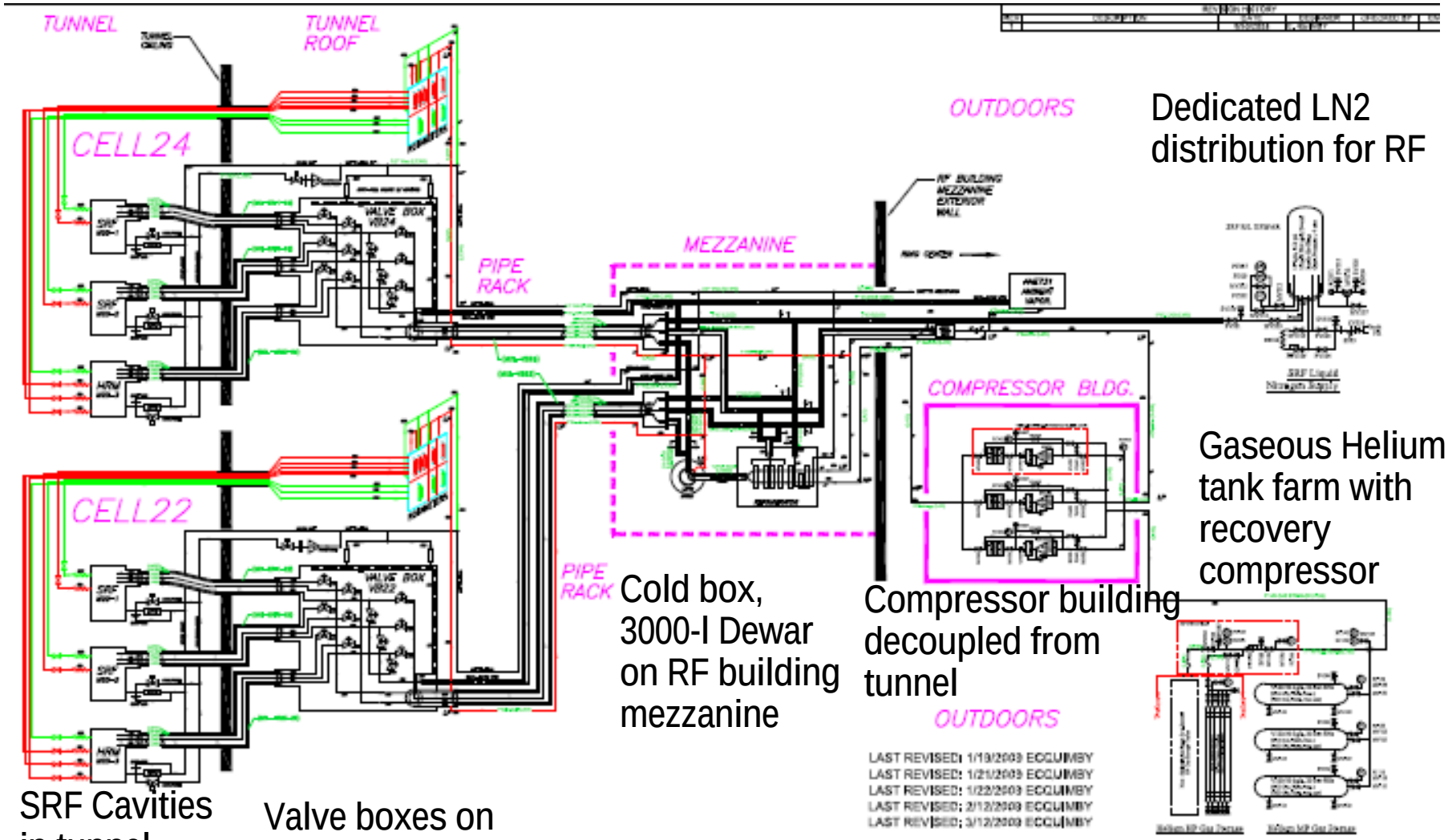

Dedicated LN2 distribution for RF

Gaseous Helium tank farm with recovery compressor

Cold box, 3000-l Dewar on RF building mezzanine

Compressor building decoupled from tunnel

SRF Cavities in tunnel

Valve boxes on tunnel roof

Detail of Cryogenic system diagram

All piping described with preliminary pressure and flow rates. Valves identified, routing between points laid out. Piping table created.

Preliminary design of valve box next.

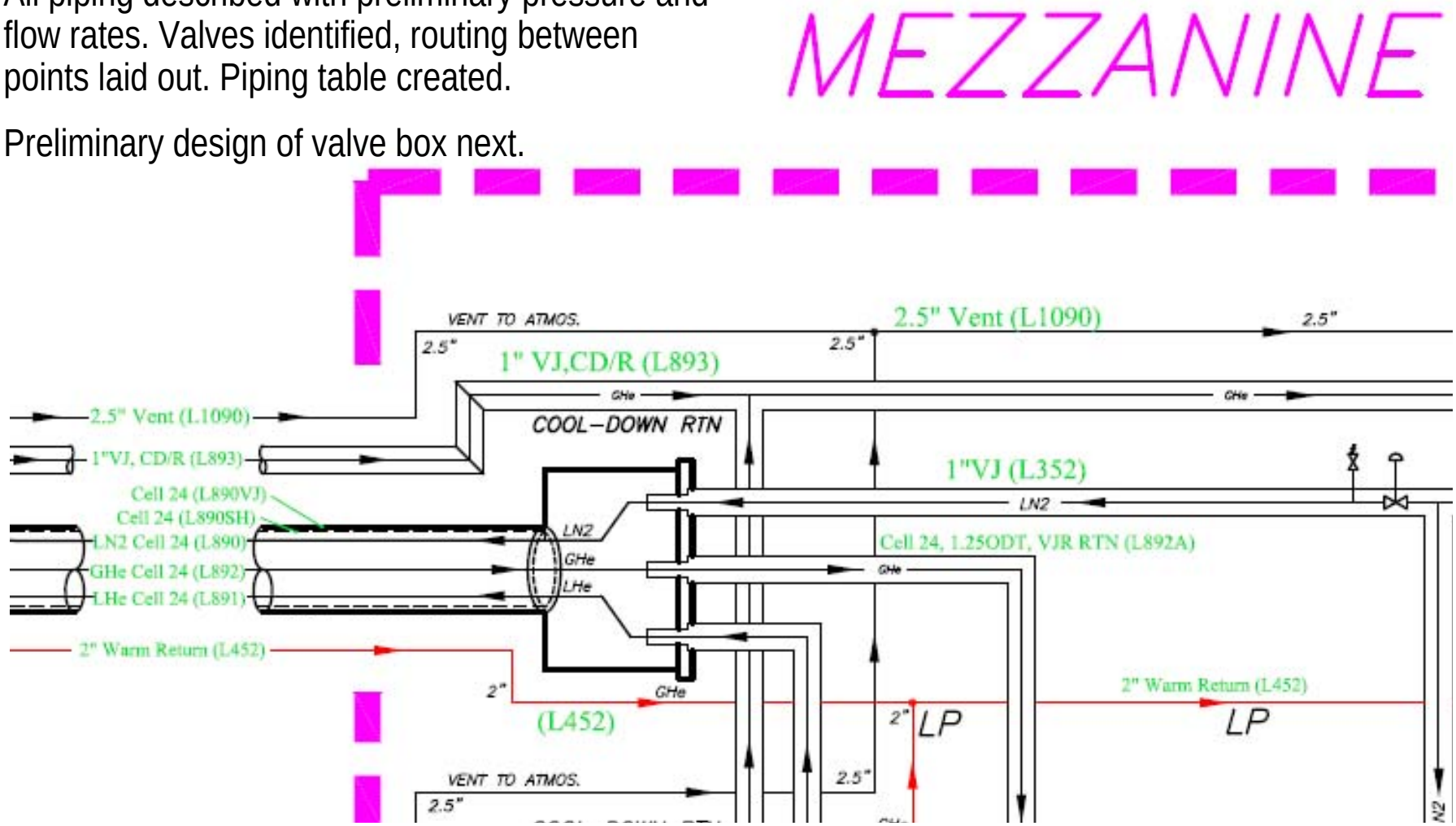

Schedule Baseline

- LINAC
  - LINAC Procure June 2009, One contract award, two phases. Phase-I Linac front end=gun, pre-bunchers: installation and test March 2010
  - LINAC- Phase-II remaining 200 MeV Linac: October 2010, install Nov 2011 (May 2011) and commissioning December 2012. With improved funding, may move Phase-II up 6 months, depends on conventional facilities
- Booster RF
  - PETRA 7 cell cavity- In laboratory under test and development of tuners, coupler
  - IOT Amplifier-Procure November, 2010. Booster commissioning May 2013
- Storage Ring RF
  - SCRF 500 MHz cavity- Procure October 2009 RF Building B.O. Aug, 2011
  - 300 kW 500MHz amplifier- Procure October 2009
  - LLRF- Staged development; Master oscillator done, controller 2nd prototype complete, system design, fabrication and test through 2012
  - Landau Cavity- Procure February, 2012 receive August 2013
  - RF LHe Cryogenic Systems-Procure December, 2010 Install June 2012
  - Storage ring commissioning October, 2013

Near Term Plans

- Procure Linac
- Final design of Linac FE experimental setup
- Booster PETRA cavity: Develop tuner loop, power coupler modifications
- Test second prototype controller board on booster cavity
- Qualify SRF cavities for compliance with DOE 10CFR851
- Incorporate Canadian Light Source klystron/CESR cavity transfer function into MATLAB model of CLS, benchmark against machine studies, incorporate into NSLS-II model and determine NSLS-II RF system performance
- Recommend approach to 300 kW transmitter: IOT vs. Klystron
- Support 500MHz and 1500MHz SBIR's
- Preliminary design of cryogenic valve box

Summary

- Basic design approach unchanged since CD-0
- Design maturity is sufficient to write detailed system specifications for LINAC, Booster RF Transmitter, Storage Ring Transmitter, SR Cavity and Cryomodule, Landau Cavity and Cryogenic system (DONE)
- Conventional facilities layout and major water, AC power system interfaces 100% complete
- Alternate designs for SR cavity transmitter and Landau cavity being pursued, fully compatible with conventional facilities.

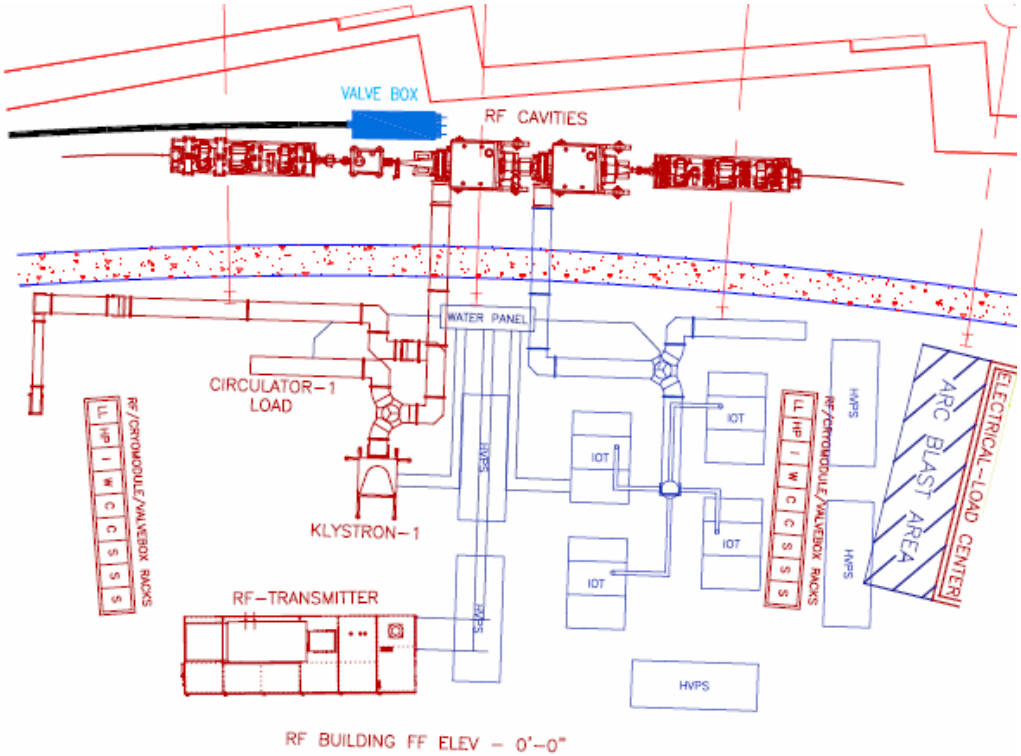

Acknowledgements

This work was performed by and under the guidance of

Alexei Blednykh, John Cupolo, Ray Fliller, Bill Gash, Hengjie Ma, Andy Marone, Bob Meier, Payman Mortazavi, George Mulholland, Jorge Oliva, Satoshi Ozaki, Ed Quimby, Jim Rose, Timur Shaftan, Bob Sikora, Nathan Towne, Ernst Weihreter, Ferdinand Willeke and Takeshi Yanagisawa as well as the support of the entire NSLS-II team.

We would also like to thank the SCRF groups at Cornell, KEK, CLS and TPS for their continuing help and encouragement, in particular Hasan Padamsee, Sergie Belomestnykh, Valery Shemelin, Takaaki Furuya, Mark de Jong and Chaoen Wang

BACKUP SLIDES

- Technical backup

Normal conducting vs. SCRF for NSLS-II

Ground Rules:

Systems will be compared at the fully built-up requirements of 5MV, 1000kW beam power.

Both NC and SCRF systems will include a passive, SCRF harmonic cavity for bunch lengthening.

Four approaches were studied:
CESR-B, KEK-B, PEP-II and BESSY-II cavities.

The two systems with demonstrated experience in Light Sources (CESR-B and PEP-II) will be compared head to head for the full-up ring configuration.

(Photon Factory cavities are similar in performance to BESSY, used in ASP, but have not yet received Toshiba quote)

We are confident that both approaches will work, it is a question of technical performance, cost and risk

PEP-II Cavity Cost

The cost to produce the PEP-II cavity for SPEAR 3 was as follows[1]:

$360k per cavity, produced to SLAC drawings by ACCEL

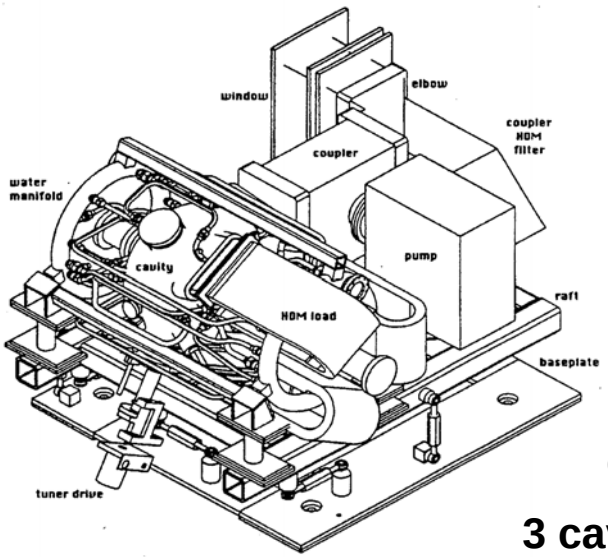

+$30k for tuner

+$30k for ceramic power window

+$120k for power coupling box

+$100k for three HOM waveguide+loads

Total ~$660k

Length = 1.6 meters, 9.6m for 6 cavities

does not fit in single straight

3 cavities (4.8m) plus harmonic requires 6.3m

Compared to 7.2m for 2 CESR-B + harmonic for same performance

The tuner, window, power coupling box and HOM waveguides are challenging to build and were manufactured in the SLAC shops. There is some cost risk associated with these numbers, since the cavities were produced some 4 (?) years ago and copper costs have sky-rocketed. Much of the fabrication had to be done within the SLAC shops due to difficult brazing operations which could not be performed in industry.

[1] H. Schwarz

CESR-B vs. PEP-II Systems Cost comparison

	PEP-II	CESR-B
RF Transmitters	$9.45M (6)	$6.3M (4)
RF Cavities	$3.96M (6)	$7.28M (4)
Cryo-plant cost*	~$2M (150W@4.5k)	$5.3M (700W@4.5k)
Water System**	1626kW rf + 78kW cryo	693kW rf + 364kW cryo
Landau Cavity	$1M	$1M
Longitudinal Damper	N/A	N/A
Subtotal Capital cost	$16.11M	$19.88M
RF AC power	$1.793M/year	$1.159M/year
Cryo-plant AC power*	$39k/year	$150k/year
Water plant AC power	$199k/year	$124k/year
RF klystron tubes	$225k/year	$150k/year
Cryogenic gases*	$5k/year	$15k/year
Subtotal Operating	$2.261M/year	$1.618M/year
Total capital +30 year ops	$84.24M	$68.42M
* Includes Harmonic cavity systems ** Cost estimate in progress, advantage SCRF		