National Synchrotron Light Source II

Project Progress Report

August 2011

All is quiet on site as the sun sets late in August. Progress on Lab–Office Buildings 1 and 2 (left side of image) is quite evident.

report due date:
September 20, 2011

Steve Dierker
NSLS-II Project Director

Brookhaven National Laboratory
Upton, New York 11973

OVERALL ASSESSMENT

The National Synchrotron Light Source II project continues to make excellent progress with satisfactory cost and schedule performance. The cumulative Schedule Performance Index (SPI) is 0.96; the cumulative Cost Performance Index (CPI) is 1.02. The Accelerator Systems were close to an "on schedule" performance for the month.

Construction of the ring building and lab–office buildings (LOBs) remains ahead of schedule. Beneficial occupancy of the injection building occurred in early August and pentant 3 beneficial occupancy is planned for late September, at which point the building will be completely enclosed.

Excellent progress was made in most areas of Accelerator Systems (ASD) during August, resulting in a current period SPI for ASD of 0.99. The linac front-end has been delivered and installed in preparation for initial performance testing. A successful Production Readiness Review (PRR) for the booster dipole magnets was held and these components are now in production. Magnet production continues to improve, and based on recent success with the 35 mm dipole magnets, a PRR is being scheduled for mid September. All other magnet suppliers have now ramped up production rates. Deliveries of components for the vacuum, electrical utilities, and power supply systems continue; substantial progress was made in ASD installation in pentants 1 and 2, the RF building, and the computer room.

Progress continued on the procurement of long-lead-time beamline components for the six Project beamlines. The Preliminary Design Review (PDR) for the hutches is scheduled for the third week in September, and a detailed work plan and delivery schedule are being finalized. A number of excellent results from the R&D program were accomplished, as summarized later in this report.

With all committee members on board, preparation for the Accelerator Readiness Review is ramping up for linac commissioning. The projected early completion date remains at March 2014 and the critical path for the project continues to pass through the 35 mm dipole magnet deliveries, girder assembly and installation, and integrated tests and commissioning of the storage ring. Activities funded by the American Recovery and Reinvestment Act (ARRA) continue to be on schedule and on budget.

UPCOMING EVENTS 2011

DOE NEXT Project CD-1 Review	Aug 30–Sept 1
Final Design Review, Booster-to-Storage Ring Transport Line	Sept 9
Preliminary Design Review, Hutches	Sept 20
Fast Orbit Feedback Workshop	Sept 20, 21
Production Readiness Review (PRR), 35 mm Dipole Magnets	Sept 22
IXS Beamline Advisory Team (BAT) Meeting	Sept 26
ALD's Conceptual Design Report (CDR) Review for NIH Beamlines	mid Nov

ACCELERATOR SYSTEMS

Magnets. All magnet suppliers are ramping up production rates (with the exception of dipole magnets; see below). However, because most magnets now are being shipped via surface rather than air, most of these magnets are in transit. We have received only the 9 magnets that were air-shipped as exceptions to facilitate girder assemblies.

Machining of the 35 mm dipole that was bonded using the modified and strengthened stacking jig was completed. Initial magnetic measurements showed an overall good field quality. Detailed magnetic measurements were completed and had acceptable field quality. Buckley Systems is preparing to bond another 35 mm dipole yoke with modifications formulated by the NSLS-II Project engineering team, which suggests that further improvement to the bonding process could result from increasing relative tension on the middle tie rods compared to the outer ones, and reducing overall rod tension to conform to the bonding pressure recommended by the lamination steel manufacturer. This was confirmed by tests with pressure-dependent film, where (Fig. 1) white surface color shows areas receiving low pressure (much of the top piece) and red indicates areas receiving high pressure.

Figure 1. Impact of the optimized improved stacking fixture and optimized distribution of applied tension (top, before optimization; bottom, after).

The first dipole manufactured using the modified and strengthened stacking jig was completed, measured, and delivered to BNL. The second magnet was bonded with a somewhat reduced compression for bonding, closer to that

recommended by the lamination material manufacturer, then machined. The analysis by the NSLS-II Project engineering team reported that the bonding was successful and the core behaves as a solid unit, but there were moderately more micro-fissures than occurred with previous methods. Based on these successes, a Production Readiness Review (PRR) is being scheduled for September 23.

Fabrication of the stacking and bonding jig for the 90 mm dipole is now in progress. Consultations are in progress on the compression rod arrangement to optimize the pressure distribution on the laminations. The multipole production is progressing well; all suppliers are in the production phase. Approximately three dozen multipoles were in transit or ready for shipping at the end of August.

Close supervision of the manufacturing remains a necessity. A recent difficulty has been the potting of the coil at Tesla, which is holding up the completion of many quadrupoles.

Vacuum systems. Five long vacuum chambers were assembled, baked, and vacuum certified in August, bringing the total available multipole and dipole chambers to 94. Both S4A and S5A chambers are in full production mode. The second girder/chamber for C25G2 was assembled and baked. The responses to the request for proposals (RPF) for the damping wigglers chamber were received and are being evaluated. Detailed layouts for exit port beampipes were generated for two types of beamline front ends. Design and analysis of the absorber for damping wiggler radiation behind the exit port continues. Ten stick absorbers were received and are being tested. The first-article RF bellows housings were received and are being measured. Vacuum layout of the booster-to-storage ring (BtS) transport line (TL) is ready for the final design review (FDR). The drawings for the linac-to-booster (LtB) transport drift beampipes were released to BNL Central Shops for fabrication.

Seven residual gas analyzers were received and are being tested. More than 20% of the vacuum gauges and controllers (VGC) have been received. All ion pump controllers (IPCs) and 20% of the titanium pump controllers (TSPCs) are also in house. Installation of IPCs, TSPCs, and VGCs continues in pentant 1. Vacuum cabling for cell 28 is almost completed.

Power supplies. The contract for the main dipole power supply has been awarded and a kickoff meeting with the supplier is scheduled. The power supply controller (PSC) software for multipole power supplies is now complete. Production PSC electronics boards are being received and tested. All testing hardware and software is available. More than 75% of the PSC chassis and about half of the chassis for the power supply interface have been received. Tests revealed a technical problem, which has been solved. The design for the polarity switching power amplifiers for the dipole correction magnet power supplies, including prototype testing, is completed and procurement is underway.

The first production power converter units are being installed in racks in pentant 1. The second delivery of such units has been received and there are now enough power converters for pentants 1 and 2 and the transport lines.

The final equipment enclosures were received in August, bringing the total onsite units to 575. All production low-precision temperature control chassis have been delivered. A test procedure and traveler have been completed, and testing has started on units needed for pentant 1 and the computer room. The procurement documentation drawing package is being worked on for the chassis for the high-precision temperature controller chassis. AC power requirements for the computer room have been revised. The cable tray design for the computer room is completed and all cable tray parts are in house. We now have sufficient UPS units for three pentants, the computer room, and the injector area.

Linac. The linac front end has been delivered and installed in Bldg. 729 for initial performance testing. The accelerating structures are completed and final tests were performed (Figs. 2, 3). Most components of the linac are at hand. The solid state modulators for the linac RF systems have been completed and have undergone successful acceptance testing.

Figure 2. Final check on the 200 MeV linac accelerating structures.

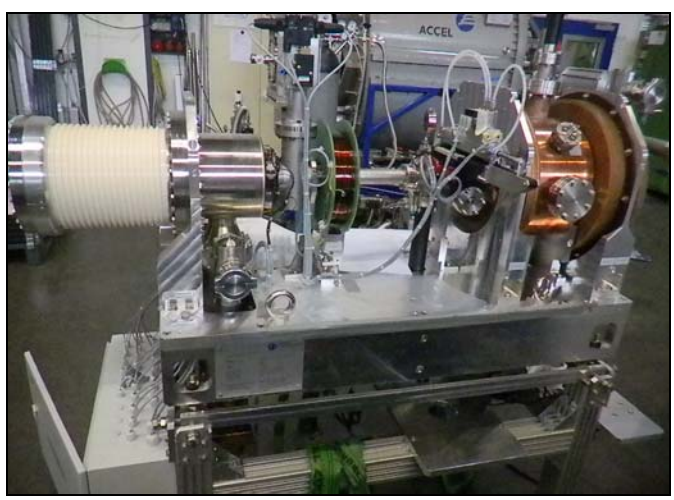

Figure 3. Completed linac front end prior to delivery to BNL in August.

Booster. A successful PRR for the booster dipole magnets was held and these components are now in production. A considerable number of yokes have already been stacked. Production of other components (stands, vacuum, power supplies, instrumentation, and controls) is in full swing.

Insertion Devices. The issue of the price increase for the permanent magnet material for the damping wiggler has been resolved, and work on the damping wiggler is proceeding. The design of the elliptically polarized undulator (EPU) will be reviewed in mid September. The procurement documents for the EPU vacuum chamber are completed. Hall probe scans of the calibration array with our Kugler measurement bench show excellent repeatability, with an error as low as a few Gauss-centimeter. The 4 m vacuum vessel (vacuum seal test) is completed and meets the requirements; the system is being shipped to BNL. The proposals for the IVU21 (SRX beamline) have been evaluated and the final selection process has started. The deadline for receiving bids for the IVU20 has been extended to September 23 at the request of the bidders. Procurement documents for the IVU22 (IXS beamline) have been updated, taking into account a desirable option for purchasing for future beamline projects.

RF. RF transmitter systems have been delivered and installation has begun (Fig. 4). Superconducting cavity design continues. The cavity program faces some difficulty due to the late delivery of Nb material as well as the poor quality of the much-delayed material; this situation is getting necessary attention from both technical and procurement management.

Figure 4. Delivered RF transmitter systems in the NSLS-II RF building.

Mechanical utilities. The first water pumps for deionized (DI) water systems have been delivered on site (Fig. 5).

Installation. Although much progress has been made, the current ASD installation work at the ring building is about 3 months behind schedule due to late delivery of production magnets, learning curves for infrastructure installation such as cable pulling and electrical utility work, and interference from the ring building contractor completing its punch list. This delay exhausted available built-in schedule float between the end of installation and the beginning of the storage ring commissioning. However, the projected project early completion date remains at March 2014 with the critical path running through delivery of the 35 mm dipole, completion of storage ring installation, and startup/commissioning.

Figure 5. Water pumps for NSLS-II deionized water systems.

In pentant 1, the remaining floor plates (excluding those across from the 6-ft opening) have been grouted and the forms removed. The second magnet/girder has been installed in the tunnel (Fig. 6). The third magnet/girder is in vacuum bakeout and is scheduled to be installed during the week of Sept. 12.

Parts have been ordered to plumb the racks to the process chilled water; the first run has yet to be installed and approved. The interlock conduits have been finished. The installation of 480-Volt outlet plugs in the tunnel is complete. To improve safety conditions, the installation of speed rail to extend the height of the mezzanine rail where the racks are near the edge of the ratchet wall is complete in pentant 1.

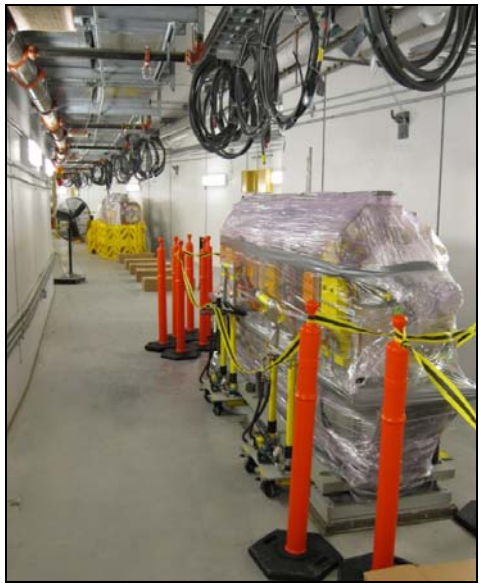

Figure 6. Second girder installed.

All racks have been put in place on the mezzanine of pentant 2. The cable tray installation is complete. Dipole girders are being delivered to the experimental floor for final integration. The A-frame hoists for dipole integration have been delivered to the experimental floor and will be assembled during the first week of September. Technician cages were assembled on the experimental floor.

Installation has proceeded in the RF building. Cable trays and DI water piping have been completed to the extent that installation of RF transmitters could start (Fig. 7). The installation of the cable tray in the computer room is complete and the AC cabling is in process. The installation of transformers in the UPS room is progressing and the RF transmitter waveguide has been received.

Figure 7. Preparation for transmitter installation in the RF building.

On August 12, beneficial occupancy was obtained for the injector building**.** The stands for the LtB TL have been machined and assembled to the base plates. BNL electricians have begun installing the LtB TL cable tray. The installation of the DI piping in the linac has begun.

Figure 8. Klystron gallery.

EXPERIMENTAL FACILITIES

Experimental Facilities continued to prepare various procurement packages for optics components and to finalize remaining designs for beamlines. Progress continued in the procurement of long-lead-time beamline components. The RFP for the CHX beamline optical components package was released. Plans are being made for the preliminary and final design review meetings for the lead and steel hutch contracts with Global Partners in Shielding, Inc. (GPS), Passaic, NJ. The PDR for the hutches is scheduled for the third week in September, and a detailed work plan and delivery schedule are being finalized.

CHX. The CHX team worked on the procurement package for the beamline optics. It includes a horizontally deflecting flat mirror, a cryogenically cooled "pseudo channel-cut" double crystal monochromator, and a double multilayer monochromator. The solicitation will be released in early September, with a deadline for proposal submissions on Oct 13. These instruments will push the state of the art for mechanical stability toward 50 nrad (rms) on a wide range of time scales—a feature required to take full advantage of the coherence properties of the NSLS-II source in studies of dynamics with x-ray photon correlation spectroscopy. A second procurement package for a multipurpose "5+2 circle" diffractometer is also well advanced. The Specifications and Statement of Work (SOW) were completed and are being reviewed by the procurement team.

IXS. The SOWs for the IXS first optics enclosure (FOE) package and the KB Mirror System are in final form and being reviewed by the procurement team. The Specifications documents for both packages are being developed.

In high-energy-resolution optics R&D, following the excellent results obtained in July at SPring-8 from the collimator dispersing wavelength (CDW) optics experiments and the internal optics management review, effort has focused on preparing for the first test experiment at PETRA III, scheduled for Oct/Nov. The spectrometer concept combining the 4B monochromator and the CDW analyzer will be tested for the first time with the goal of achieving a total resolution better than 1 meV for the baseline scope. The 1 meV prototype test end station is being commissioned and will be shipped to PETRA III in October before the beamtime test. The 4B crystals and precision positioning mechanism have been designed and are being fabricated. An article addressing the important issue of multiple wave diffraction in the CDW optics, based on theoretical simulations and experimentation at NSLS beamline X16A, has been accepted for publication.

HXN. The HXN Beamline Component Package posted for proposals in mid-July is scheduled to receive proposals by late September.

For nanopositioning development, the team extensively tested a newly developed high-load "stick and slip" piezo stage that was custom designed for the HXN microscope to meet the temperature stability requirement. The test con-

firmed that the stage is able to hold a load up to 480 g without slipping, in both the ambient and in-vacuum environment.

From Aug. 17 – 24, the HXN team carried out nanofocusing experiments at the APS beamline 26-ID. The optics fabrication group prepared a 43 micron-thick MLL that was mechanically polished down to 7 micron thickness, and a first RIE-sectioned MLL. The 43 micron-thick MLL produced a focusing size of ~35 nm. The focus size, somewhat larger than expected, was attributed to a fracture in the MLL near the interface between the MLL and the bonded Si wafer, required for mechanical sectioning. Based on this finding, the optics fabrication group proposed a method of fabricating MLLs whereby the topmost MLL layers can be protected.

The first RIE-sectioned MLL produced a focus size ~20 nm (horizontal) x 35 nm (vertical), an improvement due to the use of a larger vertical MLL. In addition, the experiment produced excellent focus beam stability, with a measured focus drift less than 8 nm per hour, which is about a 3-fold stability enhancement from the previous experiments. The improved beam stability enabled extremely effective scientific investigation. In particular, the HXN team was able to collect both x-ray fluorescence and small angle scattering signals from the sample in parallel, so that elemental distribution and electronic density distribution could be analyzed simultaneously. On the other hand, the MLL did not produce the expected level of focusing, but the cause for this performance is well understood and an improved fabrication method will be implemented. Figure 9 shows a differential phase contrast image obtained from a Pt test pattern with the smallest feature size of 20 nm. To our knowledge, this is the highest-resolution x-ray image in the hard x-ray regime. In the same experiment, the team investigated a solid-oxide fuel cell sample; the data are currently being analyzed.

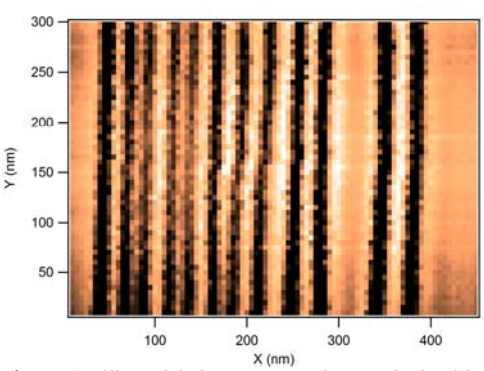

The black lines are 20 nm Pt lines separated by increasing distance, from left to right. The four left-most lines are separated by 20 nm. A 5 nm step size was used to obtain the image.

Figure 9. Differential phase contrast image obtained from a Pt test pattern.

CSX. The internally water cooled mirrors contract has been awarded. The CSX beamline team is working on the SOW and Specifications for the toroidal mirror system in the FOE. In parallel, the team is also preparing the SOW and Specs for the monochromators and the bendable mirror for the coherent branch. Progress has been made in design of the beamline white beam slits, differential pump, and all elements in the FOE. Work in progress includes research and optimization for the best elements for coating the beamline optics.

XPD. The specific requirements for a Double Laue Monochromator in support of the XPD beamline were set forth in the RFP letter and its corresponding attachments, sent out on July 22. All proposals are due on September 17. The Specifications and SOW for the XPD beamline components (but not optics, except for the high-res monochromator) are being reviewed and will be signed off shortly. This package includes the optical bench in the experimental endstation. Its preliminary design is shown in Figure 10.

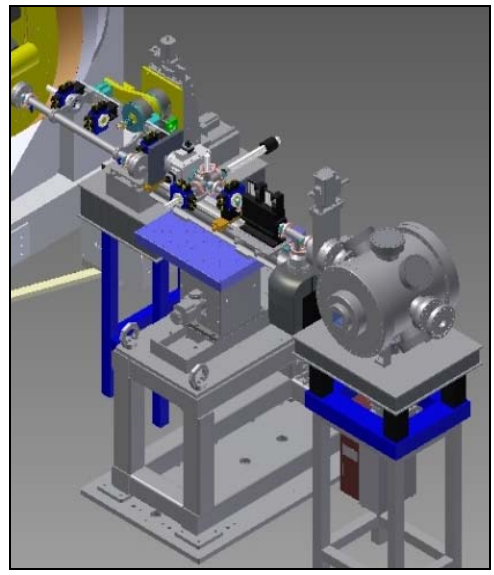

Figure 10: Preliminary design of the XPD optical station.

SRX. The Specifications and all necessary documents for the SRX Optics Package are being finalized. The SOW for the KB mirror optics package has been written; the finished draft for the Specifications is being reviewed internally. After the arrival of a Delta Tau controller with 18-bit True-DAC output, experiments to test sample stages have begun. The first step is to connect the coarse stage, fine stage, and interferometer with the controller. In parallel, work on the Specifications for sample stages and support has begun.

Optical metrology. The contract for the Nano Radian Surface Profiler (NRSP) gantry was awarded to Q-SYS. The FDR will take place on September 20 and the delivery date is scheduled for the end of January 2012. The NRSP will be based on the Bessy/NOM system but with several optical heads. The first head will use an Elcomat autocollimator (AC), the second a dedicated "long trace profiler" (LTP) optical system, and the third a Shack–Hartmann system to attempt high slope resolution on a small radius of curvature.

The Elcomat AC will be used initially with a dedicated state-of-the-art pentaprism in order to finalize the NRSP. Eventually, a dedicated double-wall enclosure will be built to achieve the T stabilization that is required for nm-precision metrology measurements.

An alternative approach to the NRSP is to extend the performance of a standard Fizeau-type interferometer (which reaches a surface-height resolution of 0.08 nm) to the precise

measurements of SR optical components (with a long, narrow footprint and large deviation from a flat surface). This extension is accomplished using the existing Fizeau-type interferometer to perform stitching interferometry. For this project, the final design is completed (subcontracted to Winlight Systems/France) and some parts are already ordered. Most of the equipment and the final 2D drawing will be delivered at the end of October when the fabrication of the mechanical parts will commence. In the meantime, all electronic equipment will be tested using the NSLS-II Delta Tau controller. An important effort is needed to produce software to be able to move the mirror under test. Discussions with the software group are underway to get some help in developing dedicated software. The system should be ready for tests in March of 2012.

Optics fabrication. Silicon polishing done in the optics labs now can routinely achieve less than 1 nm surface roughness. Measurements using the ZYGO stitching interferometer have obtained ~0.4 nm on multiple witness samples. This polishing was obtained using a 20 nm colloidal silica chemical–mechanical polishing (CMP) slurry. An experimental plan to test several etching and polishing processes for subsurface crystal damage has been drafted, and work will commence after the 4-bounce crystals have been completed for the IXS group beamtime at PETRA-III in late October.

A 43 micron-thick MLL has been mechanically thinned to 7 microns, and our first RIE-sectioned MLL has been tested, along with the mechanically thinned optic, by the HXN group. They found that the RIE recipe needs to be further adjusted to better comply with the nitrogen-impregnated MLLs we have been producing recently. A new marker layer algorithm has been implemented and tested: a marker layer is inserted with a constant depth displacement (including digitization due to MLL layer thicknesses), to provide for simpler metrology. Nitrogen inclusion during MLL growth was found to reduce the film stress by approximately a factor of 6. A new MLL was produced with 8,058 layers and a total growth thickness of 68 microns. This is a new record for multilayer growth.

PROCUREMENT ACTIVITIES

Two significant solicitations (>$100K, estimated) were released to industry through FedBizOps in August. RFPs for Storage Ring In-Vacuum Undulator and the Custom DC Amps were posted on FedBizOps on August 5 and August 31, respectively. Responses are due in Sept–Oct and awards are expected to be made by mid to late October. Eight significant procurements were awarded in August, for a total of $7.6M.

CONVENTIONAL FACILITIES

Figure 11. Work on the building envelope for LOB 2 progressed well in August.

Construction of the ring building and LOBs made excellent progress during August and continues to remain ahead of schedule. Exterior envelope and interior build-out is underway (Figs. 11, 12) for LOBs 1 through 3 and foundations are in progress for LOB 4. Continued favorable weather enabled high productivity.

Figure 12. Partition walls in LOB 1 being studded out.

The beneficial occupancy of the injection building in early August enabled accelerator installation activities to take place in pentants 1 and 2 and the installation of RF and linac equipment in the RF and injection buildings. Pentant 2 provides ample temporary storage for the ever-increasing deliveries of various production components. With turnover of the injection building, nearly half the ring building space has been completed sufficiently for ASD to accept occupancy and conduct installation activities. Punchlist work in the occupied areas is steadily being completed and is being coordinated under a work permit system.

Work on the remaining sections of the ring building continues to progress well. The roof system is now completed and exterior siding panel installation is underway in pentant 5 (Fig. 13). Pentant 3 is scheduled to be ready for beneficial occupancy in late September, and at that point the building will be completely enclosed.

Figure 13. Pentant 5 ready for the final sections of ring building siding.

Interior mechanical and electrical work is ahead of schedule in pentants 3, 4, and 5. Interior finish work is also progressing well, and turnover of the final pentant (5) is expected several months early. Completion of exterior sitework, which includes paving, finished grading, and seeding of the entire site, is underway, with grading of the interior courtyard essentially complete (Fig. 14); work on the exterior areas is underway. Final grading and seeding by the ring building contractor will be completed in October; however, some areas will be left for completion by the LOB contractor in 2012 due to the added LOB construction scope.

Figure 14. Grading of the interior courtyard is nearly complete.

RECENTLY HIRED

Li Li – Postdoc Research Assoc. – Coherent Diffraction, Photon Div.

Benjamin Seidman – Office Services Assistant – Business Division

COST/SCHEDULE BASELINE STATUS

The cumulative Cost Performance Index (CPI) is 1.02 and the cumulative Schedule Performance Index (SPI) is now at 0.96, both well within the acceptable range. The project is 60% complete, with 27% of contingency and management reserve remaining, based on EAC work remaining. The project current-month CPI is 0. 93, green status; the project current-month SPI is 0.92, green status.

The project current-period SPI of 0.92 is due to negative schedule performance in Conventional Facilities (0.81 SPI in August), due primarily to delays in the installation of magnet transformers and electrical distribution panels in pentants 3 and 4. Conversely, Accelerator Systems was close to "on schedule" performance for the month due primarily to early delivery of the linac front end, which generated an SPI of 0.99 for Accelerator Systems. Experimental Facilities continues to perform close to plan on a cumulative basis for both cost and schedule.

The critical path for the project has not changed since last month; the systems on the critical path include 35 mm dipole magnet deliveries; pentant 5 girder assembly, installation, survey, and alignment; subsystem test diagnostics; EPU installation; integrated tests; and commissioning of the storage ring. The projected early completion date for the project remains at March 2014. There are 15 months of float between the project early completion milestone and CD-4, with approximately 33% schedule contingency.

ENVIRONMENT, SAFETY, AND HEALTH (ESH)

The beneficial occupancy readiness evaluations (BOREs) continued on schedule. BOREs have been completed for pentants 1 and 2, the RF and compressor buildings, and the injection building. To be completed in September are the BOREs for pentant 3, the cooling tower, and utility tunnel.

Significant efficiencies have been gained from experience with the BORE process: with the recent evaluations there have been fewer pre-start items and less time from the BORE inspection to approved changes leading to occupancy.

The Accelerator Readiness Review (ARR) committee has been selected and all committee members are now on board. An initial meeting of the committee will take place at the Accelerator Safety Workshop during the week of Sept. 19. The intent of the meeting is to update the committee on the progress of the injection facility, injector hardware, and the necessary documentation being developed. Several groups are working on documentation necessary for a successful commissioning ARR, including operational procedures, emergency procedures, and training and qualifications criteria; these tasks are on schedule to be completed in late September.

The NSLS-II project is being carried out to design and build a world-class user facility for scientific research using synchrotron radiation. The project scope includes the design, construction, and installation of the accelerator hardware, civil construction, and experimental facilities required to produce a new synchrotron light source. It will be highly optimized to deliver ultra-high brightness and flux and exceptional beam stability. These capabilities will enable the study of material properties and functions down to a spatial resolution of 1 nm, energy resolution of 0.1 meV, and with the ultra-high sensitivity necessary to perform spectroscopy on a single atom.

DOE Project Milestone Schedule

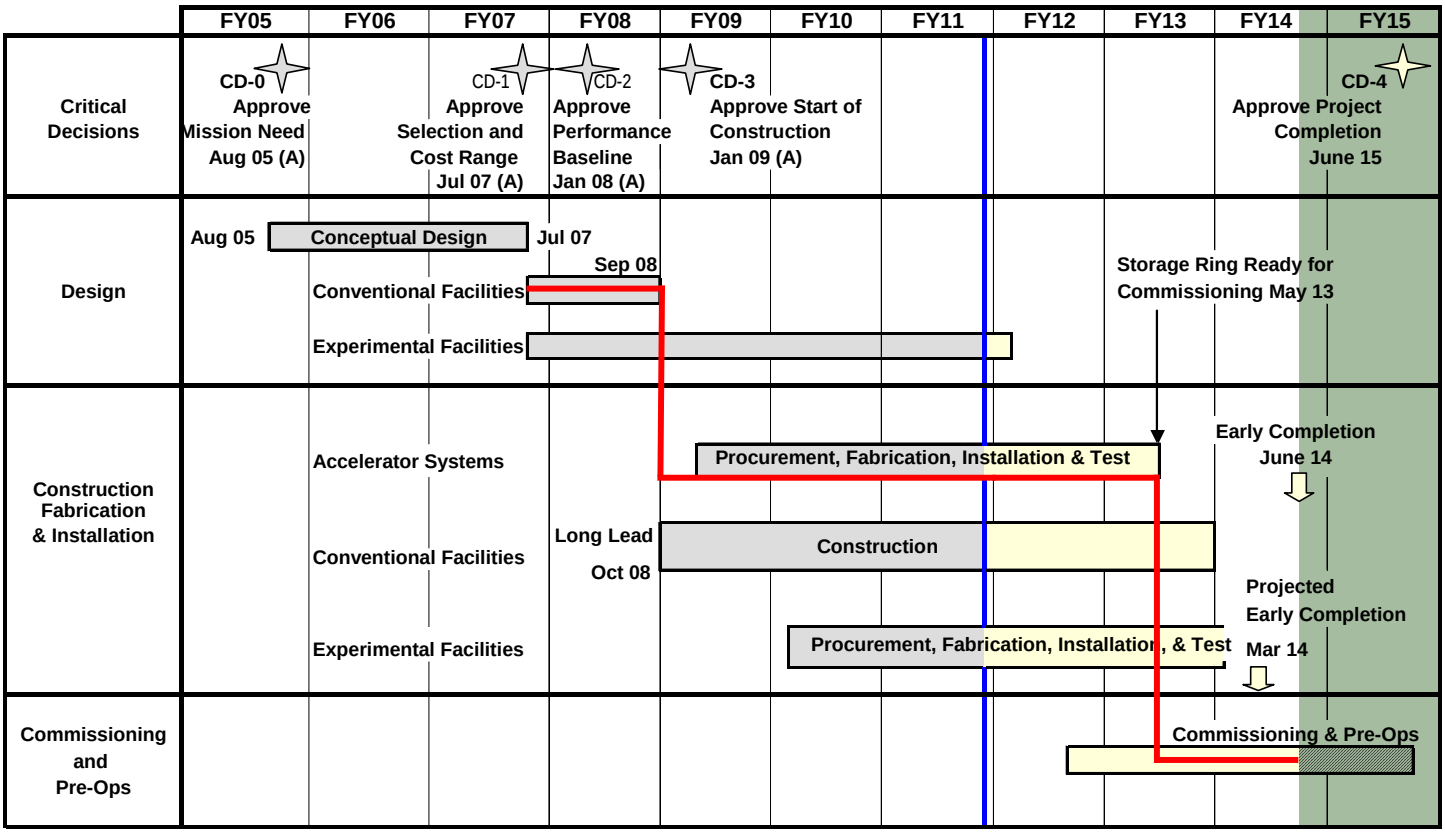

Funding Profile

Funding Type	NSLS-II Funding Profile ($M)											
	FY05	FY06	FY07	FY08	FY09	FY10	FY11	FY12	FY13	FY14	FY15	TOTAL
R&D			3.0	20.0	10.0	2.0	0.8					35.8
OPC	1.0	4.8	19.0									24.8
PED			3.0	29.7	27.3							60.0
Construction					216.0	139.0	151.3	151.4	47.2	26.3		731.2
Pre-Ops							0.7	7.7	24.4	22.4	5.0	60.2
Total NSLS-II Project	1.0	4.8	25.0	49.7	253.3	141.0	152.8	159.1	71.6	48.7	5.0	912.0

Key Personnel

Title	Name	Email	Phone
Federal Project Director	Frank Crescenzo	crescenzo@bnl.gov	631-344-3433
NSLS-II Project Director	Steve Dierker	dierker@bnl.gov	631-344-4966

EVMS for WBS 1 (NSLS-II Project) as of August 31, 2011

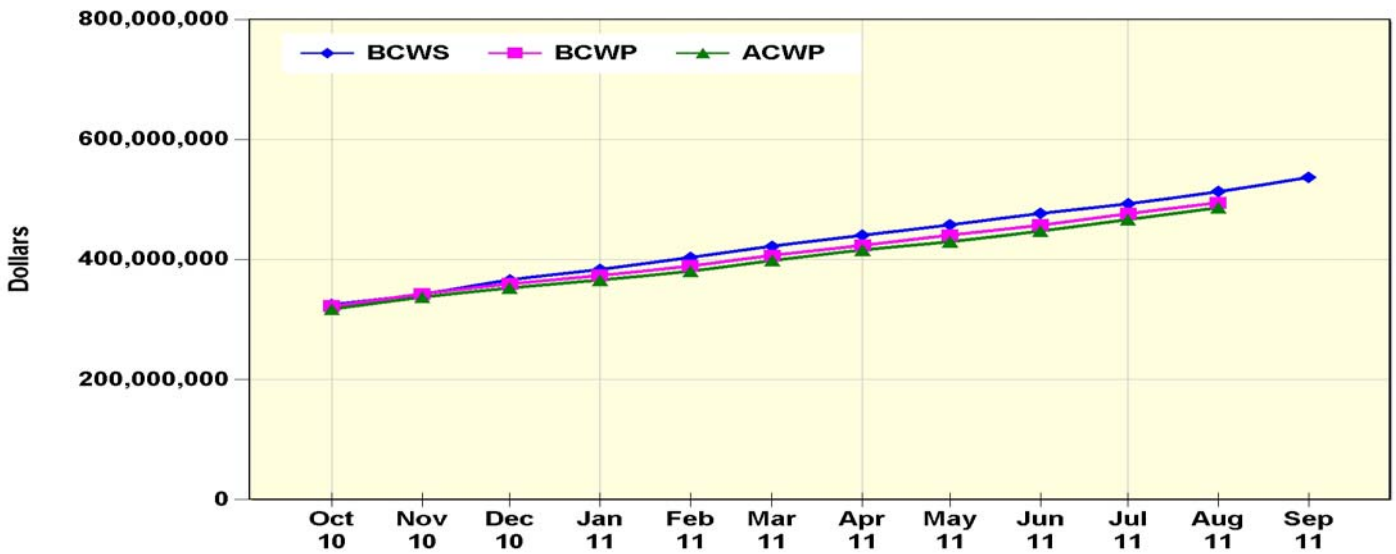

Cumulative to Date (K$):	Oct-10	Nov-10	Dec-10	Jan-11	Feb-11	Mar-11	Apr-11	May-11	Jun-11	Jul-11	Aug-11	Sep-11
BCWS	325,023	342,599	366,097	383,810	403,733	422,436	440,566	457,942	476,911	493,071	513,275	537,066
BCWP	322,376	342,811	359,505	373,554	389,554	406,989	423,737	440,842	457,437	476,392	494,904	
ACWP	317,488	337,351	352,687	366,062	380,891	398,418	416,068	429,933	447,653	466,719	486,560	

Project as of 8/31/11	Current Period	Cum-to-date
Plan (BCWS) $K	$ 20,203	$ 513,275
Earned (BCWP) $K	$ 18,512	$ 494,904
Actual (ACWP) $K	$ 19,841	$ 486,560
SV $K	$ -1,692	$ -18,371
CV $K	$ -1,329	$ 8,343
SPI	0.92	0.96
CPI	0.93	1.02
Budget at Completion $K (PMB [UB])		$ 820,053
Planned % Complete		62.6%
Earned % Complete		60.4%
Mgmt Reserve/Cont as % of BAC remaining		28.3%
Mgmt Reserve/Cont as % of EAC remaining		27.0%

The IPT can find further details on NSLS-II cost / schedule data at: http://www.bnl.gov/nsls2/project/IPT/default.asp.

Milestones – Near Term	Baseline	Done
L2-BAT reviews of 100% prelim. designs for project BLs completed	9/2010	✓
L3-SR RF Cavities – Contract Award	10/2010	✓
L3-Accelerator SR Controls – Design Complete	10/2010	
L2-Ring building pentant 1 BOD	2/2011	✓
L3-Lobby BOD	2/2011	
L3-Accelerator Injector System Design Complete	2/2011	
L3-Accelerator SR Insertion Devices – Design Complete	5/2011	✓
L3-Accelerator SR Safety Systems – Design Complete	5/2011	
L2-RF Building BOD	5/2011	✓
L3-Ring Building Pentant #2 BOD	6/2011	✓
L3-Accelerator SR Beamline Front Ends – Design Complete	8/2011	
L3-Ring Building Pentant #3 BOD	9/2011	
L3-Accelerator SR Design Complete	11/2011	

L3 = Level 3 milestone, L2 = Level 2 milestone

Schedule Performance Index, Project to Date:

SPI **0.96**

Cause & Impact: No reportable variance.
Corrective Action: None Required.

Cost Performance Index, Project to Date:

CPI **1.02**

Cause & Impact: No reportable variance.
Corrective Action: None Required.

Ten PCRs were approved in August.

PCR #	Area	Δ cost	Title or Description	PCR #	Area	Δ cost	Title or Description
11-268	PD	$392.6k	Add'l Labor - Crystal Fabrication & Metrology Labs	11-305	PD	$364.6k	Lead & Steel Hutches – Contract Award
11-298	PD	$0k	CAM Changes for Experimental	11-309	PD	$0k	Rephase 4B Monochrometer Plan
11-299	AS	$0k	Incorporate Supplier's Schedule for EPU contract	11-311	AS	$521.4k	Main Dipole Power Supply Contract Award
11-312	AS	<$277k>	Procurement Schedule Revisions	11-306	AS	$494.7k	Injector & RF Piping Contract Award Implementation
11-289	CF	$198k	Misc. EW Howell LOB Contract Changes #1	11-316	CF	$0	Torcon Safety Incentive (Feb. 2011 – May 2011)

ARRA DETAILS

The Recovery Act has provided advanced funding for NSLS-II construction, created jobs, and substantially reduced the cost and schedule risks for the project. The overall schedule for the ring building completion has not been accelerated; however, Recovery Act funds have allowed for re-ordering of the work sequence with a six-month acceleration of the injection building completion. Acceleration of the injection building allows for earlier installation and commissioning of the injector, which had been close to the critical path. This addition of schedule float significantly reduces the schedule risk for the accelerator. In addition, Recovery Act funds have allowed for accelerated completion of the Laboratory–Office Buildings by approximately 15 months, which has enabled the project to maximize the cost advantage of the depressed construction market.

ARRA$ as of 8/31/11	Current Period	Cum-to-date
Plan (BCWS) $K	$ 2,024	$ 119,431
Earned (BCWP) $K	$ 2,590	$ 122,157
Actual (ACWP) $K	$ 3,196	$ 120,714
SV $K	$ 566	$ 2,727
CV $K	$ -606	$ 1,444

ARRA Milestones		
Description	Baseline Date	Status
Pour tunnel slab CL 024-030.	12/30/09	Completed 11/25/09.
Begin concrete tunnel roof pentant 1.	12/10/09	Completed 11/12/09.
Complete tunnel slab pentant 2.	1/15/10	Completed 1/15/10.
Pentant 2 tunnel walls complete.	3/16/10	Completed 3/11/10.
Begin steel erection pentant 1.	4/14/10	Completed 3/16/10.
Start metal decking for pentant 1 Service Building.	5/12/10	Completed 4/14/10.
Pentant 5 tunnel slab complete.	5/25/10	Completed 12/9/10.
Begin experimental floor concrete, pentant 1.	6/2010	Completed 6/7/10.
Begin experimental floor concrete, pentant 2.	7/2010	Completed 6/21/10.
Complete structural for steel pentant 3.	9/2010	Completed 8/13/10.
Complete chilled Water Plant enclosure.	9/2010	Completed 8/2010.
Pentant 1 building enclosure complete.	10/2010	Completed 10/2010.
RF building enclosure complete.	11/2010	Completed 11/2010.
Injection building enclosure complete	12/2010	Completed 8/2011.
Permanent power available, pentant 1	1/2011	Completed 1/2011.
Pentant 1 ready for beneficial occupancy	2/2011	Completed 3/2011.
RF Building ready for beneficial occupancy	3/2011	Completed 6/2011.
Chilled Water expansion complete	4/2011	Completed 3/2011.
Injection building ready for beneficial occupancy	5/2011	Completed 8/2011.
Pentant 2 ready for beneficial occupancy	6/2011	Completed 7/2011.
Permanent power available, pentant 3	8/2011	Completed 7/2011.
Pentant 3 ready for beneficial occupancy	9/2011	Anticipate completion late September.

Blue text is new.

CONTRACT PERFORMANCE REPORT
FORMAT 1 - WORK BREAKDOWN STRUCTURE

FORM APPROVED
OMB No. 0704-0188

1. CONTRACTOR	2. CONTRACT	3. PROGRAM	4. REPORT PERIOD
a. NAME Brookhaven Science Associates	a. NAME National Synchrotron Light Source II (NSLS-II)	a. NAME August 2011 EV8	a. FROM (YYYYMMDD) 2011 / 08 / 01
b. LOCATION (Address and ZIP Code) Brookhaven National Laboratory, Upton,NY	b. NUMBER	b. PHASE	b. TO (YYYYMMDD) 2011 / 08 / 31
	c. TYPE / d. SHARE RATIO	c. EVMS ACCEPTANCE NO YES X (YYYYMMDD)	

5. CONTRACT DATA

a. QUANTITY	b. NEGOTIAT COST	c. ESTIMATED COST OF THORIZED UNPRICED WOF	d. TARGET PROFIT/ FEE	e. TARGET PRICE	f. ESTIMATED PRICE	g. CONTRACT CEILING	i. DATE OF OTB/OTS (YYYYMMDD)
1	912,000,000	0	0	912,000,000	0	0	

8. PERFORMANCE DATA

ARRA vs. REGUL Cost Account	CURRENT PERIOD					CUMULATIVE TO DATE					AT COMPLETION		
	BUDGETED COST		ACTUAL COST	VARIANCE		BUDGETED COST		ACTUAL COST	VARIANCE				
ITEM	WORK SCHEDULED	WORK PERFORMED	WORK PERFORMED	SCHEDULE	COST	WORK SCHEDULED	WORK PERFORMED	WORK PERFORMED	SCHEDULE	COST	BUDGETED	ESTIMATED	VARIANCE
(1)	(2)	(3)	(4)	(5)	(6)	(7)	(8)	(9)	(10)	(11)	(14)	(15)	(16)
A ARRA													
1.05.01.02.01 CF Project Office Construction Management	0	0	0	0	0	0	0	0	0	0	168,151		
1.05.02.02.01 CF Title II A/E Design	0	0	0	0	0	300,000	300,000	311,719	0	-11,719	300,000		
1.05.03.02.01 General Requirements	0	2,575	2,576	2,575	-1	5,182,343	5,290,385	3,329,014	108,042	1,961,370	5,295,535		
1.05.03.02.02 Site Work	0	10,326	10,326	10,326	0	3,456,532	3,576,550	3,403,518	120,018	173,032	3,611,419		
1.05.03.02.03 Pentant 1 and Service Building	0	2,751	0	2,751	2,751	19,501,848	19,366,165	19,096,446	-135,683	269,719	19,446,336		
1.05.03.02.04 Pentant 2 and Service Building	0	2,477	18,728	2,477	-16,251	15,414,127	15,393,612	15,490,493	-20,515	-96,881	15,453,256		
1.05.03.02.05 Pentant 3 and Service Building	439,915	77,594	33,227	-362,320	44,368	10,179,191	10,315,032	10,407,517	135,840	-92,486	10,363,240		
1.05.03.02.06 Pentant 4 and Service Building	36,200	0	0	-36,200	0	2,393,628	2,596,595	2,772,290	202,967	-175,694	2,749,735		
1.05.03.02.07 Pentant 5 and Service Building	7,377	32,537	26,538	25,160	5,999	6,985,008	6,929,718	7,036,259	-55,290	-106,541	7,145,854		
1.05.03.02.08 Injection Building	0	149,164	52,228	149,164	96,936	5,584,306	5,542,348	5,378,594	-41,958	163,754	5,937,308		
1.05.03.02.09 RF and Compressor Building	0	8,750	0	8,750	8,750	4,952,780	4,922,847	4,950,780	-29,933	-27,933	4,950,780		
1.05.03.02.10 Lobby	0	11,775	63,375	11,775	-51,600	3,005,358	2,931,779	2,877,799	-73,579	53,980	2,986,150		
1.05.03.02.11 Cooling Tower and Process Water	0	196,284	196,283	196,284	1	4,466,519	4,368,398	4,330,020	-98,121	38,378	4,471,519		
1.05.03.02.12 Underground Mechanical Utilities	0	1,073	0	1,073	1,073	8,573,121	8,572,270	8,573,121	-851	-851	8,573,121		
1.05.03.02.13 Site Electrical Utilities	28,593	2,350	2,700	-26,243	-350	8,363,031	8,406,320	8,574,801	43,289	-168,481	8,411,720		
1.05.03.02.14 LN2 and GN2 Systems	0	0	0	0	0	0	0	0	0	0	0		
1.05.03.03 Electrical Substation and Feeder (Contract)	0	0	117,849	0	-117,849	2,943,143	2,943,143	2,851,832	0	91,312	2,943,143		
1.05.03.04 Chilled Water Plant (Contract)	0	0	138,408	0	-138,408	9,200,000	9,184,400	9,033,851	-15,600	150,549	9,200,000		
1.05.03.06.01 LOB 1	944,196	940,942	1,142,820	-3,255	-201,879	6,038,999	6,871,786	6,853,477	832,787	18,308	16,603,830		
1.05.03.06.02 LOB 2	392,187	873,969	975,728	481,782	-101,759	1,018,448	2,358,316	2,810,296	1,339,868	-451,980	6,873,152		
1.05.03.06.03 LOB 3	175,314	277,132	415,374	101,818	-138,241	1,872,145	2,287,803	2,631,759	415,658	-343,956	13,188,199		
ARRA Totals:	2,023,782	2,589,699	3,196,160	565,917	-606,460	119,430,528	122,157,467	120,713,587	2,726,939	1,443,880	148,672,448		
ARRA Undist Budget											260,642		
ARRA Totals:	2,023,782	2,589,699	3,196,160	565,917	-606,460	119,430,528	122,157,467	120,713,587	2,726,939	1,443,880	148,933,090		

CLASSIFICATION (When Filled In)

CONTRACT PERFORMANCE REPORT
FORMAT 1 - WORK BREAKDOWN STRUCTURE

FORM APPROVED
OMB No. 0704-0188

1. CONTRACTOR	2. CONTRACT	3. PROGRAM	4. REPORT PERIOD
a. NAME Brookhaven Science Associates	a. NAME National Synchrotron Light Source II (NSLS-II)	a. NAME August 2011 EV8	a. FROM (YYYYMMDD) 2011 / 08 / 01
b. LOCATION (Address and ZIP Code) Brookhaven National Laboratory, Upton,NY	b. NUMBER	b. PHASE	b. TO (YYYYMMDD) 2011 / 08 / 31
	c. TYPE / d. SHARE RATIO	c. EVMS ACCEPTANCE NO YES X (YYYYMMDD)	

5. CONTRACT DATA

a. QUANTITY	b. NEGOTIATED COST	c. ESTIMATED COST OF AUTHORIZED UNPRICED WORK	d. TARGET PROFIT/ FEE	e. TARGET PRICE	f. ESTIMATED PRICE	g. CONTRACT CEILING	i. DATE OF OTB/OTS (YYYYMMDD)
1	912,000,000	0	0	912,000,000	0	0	

6. ESTIMATED COST AT COMPLETION

	MANAGEMENT ESTIMATE AT COMPLETION (1)	CONTRACT BUDGET BASE (2)	VARIANCE (3)
a. BEST CASE	0		
b. WORST CASE	0		
c. MOST LIKELY	0	912,000,000	912,000,000

7. AUTHORIZED CONTRACTOR REPRESENTATIVE
a. NAME (Last, First, Middle Initial)
c. SIGNATURE
d. DATE SIGNED (YYYYMMDD)

8. PERFORMANCE DATA

WBS[2] / WBS[3] / Control Acct / ITEM (1)	CURRENT PERIOD BUDGETED COST WORK SCHEDULED (2)	BUDGETED COST WORK PERFORMED (3)	ACTUAL COST WORK PERFORMED (4)	VARIANCE SCHEDULE (5)	VARIANCE COST (6)	CUMULATIVE TO DATE BUDGETED COST WORK SCHEDULED (7)	BUDGETED COST WORK PERFORMED (8)	ACTUAL COST WORK PERFORMED (9)	VARIANCE SCHEDULE (10)	VARIANCE COST (11)	AT COMPLETION BUDGETED (14)	ESTIMATED (15)	VARIANCE (16)
1.01 Project Management													
1.01.01 Project Management													
WBS[3]Totals:	213,862	213,862	76,818	0	137,045	6,026,040	6,026,040	6,138,664	0	-112,625	7,962,806	8,446,608	-483,802
1.01.02 Environmental, Safety & Health													
WBS[3]Totals:	119,705	119,705	126,271	0	-6,566	3,965,334	3,965,334	4,408,401	0	-443,066	6,478,032	6,914,532	-436,500
1.01.03 Project Support													
WBS[3]Totals:	1,155,757	1,155,757	1,322,191	0	-166,433	34,017,330	34,017,330	34,539,280	-0	-521,950	43,353,294	44,209,869	-856,575
1.01.04 Quality Assurance													
WBS[3]Totals:	67,448	67,448	74,207	0	-6,759	2,394,529	2,394,529	2,128,764	0	265,765	3,397,133	3,397,133	0
1.01.05 Configuration Management & Document Control													
WBS[3]Totals:	30,452	30,452	25,836	0	4,616	1,290,148	1,290,148	1,056,007	0	234,142	1,972,567	1,972,567	0
WBS[2]Totals:	**1,587,225**	**1,587,225**	**1,625,323**	**0**	**-38,098**	**47,693,381**	**47,693,381**	**48,271,115**	**-0**	**-577,734**	**63,163,831**	**64,940,708**	**-1,776,877**
1.02 R&D and Conceptual Design													
1.02.01 Accelerator Systems R&D													
WBS[3]Totals:	9,167	24,318	0	15,151	24,318	11,115,267	11,208,829	10,952,151	93,563	256,678	11,460,076	11,890,274	-430,198
1.02.02 Experimental Systems R&D													
WBS[3]Totals:	351,492	312,246	359,807	-39,247	-47,562	17,448,638	17,224,224	16,813,404	-224,414	410,820	19,166,550	18,771,057	395,493
1.02.03 Conceptual Design - Accelerator Systems													
WBS[3]Totals:	0	0	0	0	0	12,998,214	12,998,214	12,960,504	0	37,709	12,998,214	12,960,504	37,709
1.02.04 Conceptual Design - Experimental Facilities													
WBS[3]Totals:	0	0	0	0	0	709,445	709,445	712,450	0	-3,005	709,445	712,450	-3,005
1.02.05 Conceptual Design - Conventional Facilities													
WBS[3]Totals:	0	0	0	0	0	3,886,952	3,886,952	3,872,878	0	14,074	3,886,952	3,886,952	0
1.02.06 Conceptual Design - Project Management & Support													
WBS[3]Totals:	0	0	0	0	0	7,086,188	7,086,188	7,326,180	0	-239,992	7,086,188	7,325,314	-239,126
1.02.07 Project Management - R&D													
WBS[3]Totals:	18,933	18,933	86	0	18,847	5,287,229	5,287,229	5,034,226	0	253,003	5,305,339	5,066,213	239,126
WBS[2]Totals:	**379,593**	**355,497**	**359,894**	**-24,096**	**-4,397**	**58,531,932**	**58,401,081**	**57,671,793**	**-130,851**	**729,288**	**60,612,763**	**60,612,763**	**-0**
1.03 Accelerator Systems													
1.03.01 Accelerator Systems Management													
WBS[3]Totals:	94,496	94,496	32,946	0	61,549	4,205,130	4,205,130	4,639,858	0	-434,727	6,127,100	6,127,100	0
1.03.02 Accelerator Physics													
WBS[3]Totals:	219,338	219,338	219,257	0	81	7,568,121	7,568,121	7,680,328	0	-112,207	10,071,767	10,071,767	0
1.03.03 Injection System													
WBS[3]Totals:	1,512,890	3,171,165	1,231,509	1,658,275	1,939,656	28,871,950	27,798,261	19,149,978	-1,073,688	8,648,283	43,877,439	44,581,159	-703,720
1.03.04 Storage Ring													
WBS[3]Totals:	6,558,884	4,375,476	5,840,170	-2,183,408	-1,464,694	92,213,858	72,339,828	74,352,487	-19,874,030	-2,012,660	157,422,839	162,461,140	-5,038,301
1.03.05 Controls Systems													
WBS[3]Totals:	329,616	410,673	648,336	81,057	-237,663	12,077,394	11,431,415	11,181,299	-645,979	250,116	20,317,707	20,317,707	0
1.03.06 Accelerator Safety Systems													
WBS[3]Totals:	230,676	31,456	175,789	-199,220	-144,333	3,201,529	1,957,694	3,092,924	-1,243,835	-1,135,230	6,070,137	7,674,127	-1,603,990
1.03.07 Insertion Devices													
WBS[3]Totals:	533,787	851,558	940,848	317,771	-89,290	7,105,850	5,745,915	5,740,376	-1,359,935	5,539	24,227,823	26,337,726	-2,109,903
1.03.08 Accelerator Fabrication Facilities													
WBS[3]Totals:	15,799	224,099	75,473	208,300	148,626	7,333,010	6,901,186	6,770,009	-431,824	131,177	7,358,739	7,589,500	-230,761
WBS[2]Totals:	**9,495,485**	**9,378,260**	**9,164,328**	**-117,225**	**213,932**	**162,576,842**	**137,947,550**	**132,607,260**	**-24,629,292**	**5,340,291**	**275,473,552**	**285,160,226**	**-9,686,675**
1.04 Experimental Facilities													
1.04.01 Experimental Facilities Management													
WBS[3]Totals:	124,338	96,843	140,550	-27,495	-43,708	3,880,037	3,831,024	4,685,937	-49,013	-854,913	4,877,349	5,780,777	-903,428
1.04.02 Standard Local Controls & Data Acquisition Systems													
WBS[3]Totals:	0	0	0	0	0	69,585	52,582	3,457	-17,003	49,125	69,585	319,585	-250,000
1.04.05 User Instruments													
WBS[3]Totals:	500,351	500,534	472,829	183	27,706	10,879,103	10,575,263	9,883,447	-303,840	691,816	64,445,109	65,402,368	-957,258
1.04.06 Front End User Requirements Development													
WBS[3]Totals:	0	0	0	0	0	456	456	2,111	-0	-1,655	456	2,111	-1,655
1.04.07 Optics Labs													
WBS[3]Totals:	36,215	17,012	10,513	-19,203	6,499	1,094,109	858,476	748,109	-235,633	110,367	1,509,737	1,824,972	-315,235
WBS[2]Totals:	**660,904**	**614,389**	**623,892**	**-46,515**	**-9,503**	**15,923,291**	**15,317,801**	**15,323,061**	**-605,490**	**-5,260**	**70,902,236**	**73,329,814**	**-2,427,577**
1.05 Conventional Facilities													
1.05.01 Conventional Facilities Management													
WBS[3]Totals:	354,535	354,535	269,144	0	85,391	11,042,952	11,042,952	10,719,378	0	323,574	15,887,326	15,887,326	0
1.05.02 Conventional Facilities Engineering and Design													
WBS[3]Totals:	121,670	128,319	132,242	6,649	-3,923	21,452,431	21,446,691	20,504,813	-5,740	941,878	23,181,410	22,554,320	627,090
1.05.03 Conventional Facilities Construction													
WBS[3]Totals:	7,447,574	5,963,490	7,567,923	-1,484,084	-1,604,433	194,127,634	201,417,177	200,446,784	7,289,543	970,393	256,999,385	258,524,086	-1,524,701
1.05.04 Integrated Controls & Communications													
WBS[3]Totals:	16,915	0	2,256	-16,915	-2,256	898,387	778,400	523,368	-119,987	255,033	1,256,000	1,256,000	0
1.05.05 Standard Equipment													
WBS[3]Totals:	0	0	1,592	0	-1,592	57,263	0	11,931	-57,263	-11,931	1,025,586	1,025,586	0
1.05.06 Conventional Facilities Commissioning													
WBS[3]Totals:	22,455	13,279	12,871	-9,176	408	385,939	273,908	168,201	-112,031	105,707	578,000	578,000	-0
WBS[2]Totals:	**7,963,149**	**6,459,623**	**7,986,028**	**-1,503,526**	**-1,526,405**	**227,964,605**	**234,959,128**	**232,374,474**	**6,994,522**	**2,584,654**	**298,927,708**	**299,825,319**	**-897,611**
1.06 Pre-Operations													
1.06.01 Management - Pre Ops													
WBS[3]Totals:	0	0	0	0	0	0	0	0	0	0	20,170,700	20,170,700	0
1.06.02 Accelerator Systems - Pre Ops													
WBS[3]Totals:	116,923	116,923	81,344	0	35,579	584,616	584,616	312,505	0	272,111	17,071,591	17,071,591	0
1.06.03 Experimental Facilities - Pre Ops													
WBS[3]Totals:	0	0	0	0	0	0	0	0	0	0	3,823,660	4,652,102	-828,442
1.06.04 Spares													
WBS[3]Totals:	0	0	0	0	0	0	0	0	0	0	9,134,454	9,134,454	-0
WBS[2]Totals:	**116,923**	**116,923**	**81,344**	**0**	**35,579**	**584,616**	**584,616**	**312,505**	**0**	**272,111**	**50,200,405**	**51,028,847**	**-828,442**
Performance Measurement Baseline - PMB	20,203,279	18,511,917	19,840,808	-1,691,362	-1,328,891	513,274,668	494,903,558	486,560,208	-18,371,111	8,343,350	819,280,496	834,897,678	-15,617,182
Undistributed Budget											772,011		
Sub Total	20,203,279	18,511,917	19,840,808	-1,691,362	-1,328,891	513,274,668	494,903,558	486,560,208	-18,371,111	8,343,350	820,052,507		
Contingency/Mangement Reserve											91,947,493		
Total Project Cost -TPC	20,203,279	18,511,917	19,840,808	-1,691,362	-1,328,891	513,274,668	494,903,558	486,560,208	-18,371,111	8,343,350	912,000,000		