National Synchrotron Light Source II

Project Progress Report

June 2009

July 20, 2009

Steve Dierker
NSLS-II Project Director

Brookhaven National Laboratory
Upton, New York 11973

OVERALL ASSESSMENT

A very successful Start-of-Construction Celebration event for the National Synchrotron Light Source II project was held on June 15. Many dignitaries, officials, and laboratory staff attended the event to commemorate the occasion.

At the DOE Independent Project Review (IPR) conducted by the Office of Science on June 9–11, the review committee concluded that the project has made excellent progress since CD-3 approval. The project continues to be on schedule and on budget with excellent technical progress and reasonable cost and schedule contingencies. Overall, cost and schedule performance for the project is satisfactory except in a few areas where delays in staffing occurred. The mitigation plan to increase labor resources in targeted Accelerator Systems areas is being actively implemented.

Ring building construction continuous make good progress and is slightly ahead of schedule despite heavy frequent rainfall during June. Main activities were earthwork and utility installation, where about 50% of the ring building footprint area is ready for foundation concrete work and the center and secondary reference monuments were erected.

In Accelerator Systems, validation of the alignment requirements for the storage ring magnet and girder system was accomplished and component designs are progressing from development into procurement. Activities in production procurements continued for major subsystems such as magnets, the linac, vacuum chambers, and booster cavities.

The Final Design Plan for the Experimental Facilities was produced. The overall design and associated R&D programs progressed well, and according to the plan. Conceptual Design Reports for the six project beamlines are being developed with a goal to complete them by September 2009.

SCHEDULED EVENTS 2009

Inelastic X-ray Scattering (IXS) Beamline Advisory Team (BAT)	July 8
Hard X-Ray Nanoprobe (HXN) BAT meeting	July 9
Pulsed Magnet Design and Measurement Workshop	July 27–28
Sub-micron X-ray Spectroscopy (SRX) BAT meeting	July 30–31
X-ray power diffraction (PWD) BAT meeting	August 6
Coherent Soft X-Ray (CSX) BAT meeting	August 10
Coherent Hard X-Ray (CHX) BAT Meeting	August 11
Accelerator Systems Advisory Committee (ASAC) meeting	Oct. 22-23
Conventional Facilities Advisory Committee (CFAC) meeting	Fall 2009
DOE Review of the NSLS-II Project	Nov. 17

ACCELERATOR SYSTEMS DIVISION (ASD)

Substantial work was accomplished during the month of June. Overall, the cost for performed work is under budget, but the schedule variance continued to slowly grow. NSLS-II Project management recognized the significance of this trend and authorized the addition of up to 36 FTE staff to mitigate the schedule variance. Requisitions are in place for some of the identified positions, but the effects of this schedule mitigation will take some time to become evident.

The major achievement in June was the validation of one of the most demanding alignment requirements for the storage ring—which was accomplished using laboratory rigging staff, a truck, and a forklift. In this test, a prototype multipole girder, which had been precisely aligned using the vibrating wire alignment system and fiducialized using a laser tracker system, was picked up from the measurement facility in Building 902 and placed on a truck by a BNL rigging crew. It was driven from Building 902 to the truck station at the south side of the laboratory (Fig. 1) , where a waiting forklift raised and lowered it back onto the truck, which returned to Building 902 where the girder was unloaded and moved to the environmental room. After the position of the girder was reestablished using the laser tracker system, as will be done when girders are placed in the tunnel, the magnetic field center alignment of the prototype magnets was measured using the vibrating wire system. Their alignment was found to be within a few microns of the original positions, well within the required tolerance. The test validated the robustness of the magnet/girder system for transport between Building 902 and the NSLS-II building, as well as the methods planned for use during tunnel installation to reestablish critical magnetic alignment in the storage ring.

Fig. 1: Moving the prototype girder, in test of magnetic alignment issues.

Key decisions have been made for the detailed configuration of storage ring (SR) components. To address a concern regarding the SR dynamic aperture, a "third chromatic knob" will be included in the SR lattice in the dispersion region between the two bending magnets. This section of the ring has three sextupoles, one in the center and two symmetrically placed about the center, providing two independent chromaticity adjustments. The preferred method for creating the third knob is to shift the downstream sextupole upstream 15 cm and power it separately from its

former partner. This change allows control of the horizontal second-order chromaticity, improving the dynamic aperture of the machine. Related design changes are in progress for the vacuum system (move a pump and absorber, change pole face machining), girder (change component placement), power supplies, and accelerator physics.

Component designs are progressing from development into procurements. First-article BPMs and power supply regulators have been received for evaluation, and dipole extrusions that were successfully bent by BNL shops were sent for prototype machining to three vendors. Further along are the multipole magnets, where bids from seven vendors are under evaluation with the goal of releasing them for procurement by the end of August.

Infrastructure development continues, with progress toward major equipment for the various laboratories, including the ultrasonic cleaner for the vacuum facility, and the Hall probe bench and the environmental room for the insertion device laboratory. The vacuum gauge/RGA test stand has been assembled and is operational, and the components for the ion pump speed measurement dome are being assembled in the vacuum laboratory.

Basic development work on controls continues, with tools in place for utilization of RTEMS and the implementation of IRMIS, where power systems information is already being loaded into the information database. A test timing system has been set up in the controls lab and is being used to test the integration of drivers with EPICS. Activities in support of XFD include implementation of the controls system for X16A at NSLS and ordering controls instrumentation for the optical metrology lab.

Power supply development continues on the dipole and for the multipole supplies; in particular, the power supply controller itself and the two channel corrector supplies. The Controls group has begun testing the "1-wire" devices for measuring temperature and AC current. Component testing, such as measuring DCCT performance in "real" situations, is underway. A full water-cooled air-exchange rack system with five NSLS-II prototype power supplies also is in tests.

The new safety shutter design with flexible bellows exceeded a half-million cycles without a vacuum failure on the bellows in June tests. System changes (to the front ends and PPS) to utilize this design were evaluated and coordinated.

EXPERIMENTAL FACILITIES DIVISION (XFD)

The Experimental Facilities Division continued to make very good progress on staff hiring in June. Three offers have been accepted by the selected candidates for the Inelastic X-ray Scattering beamline scientist, the nanopositioning engineer, and the beamline development scientist positions. Interviews for additional beamline scientists and engineers as well as for a mirror metrology scientist have been scheduled for July.

The 0.1 meV R&D group continued effort in the R&D beamline commissioning at NSLS. The incident x-ray beam has been set to the required energy, 9.1 keV, and has been characterized in its angular divergence. The divergence has been reduced to a level that should be satisfactory for the initial high-resolution optics test. Crystal optic pieces have been fabricated and installed. Alignments of various optics components are proceeding according to the experiment plan. Fig.2 (below) shows the schematic picture of the optics test instrument including the temperature stabilizing ovens that house the dispersive crystals.

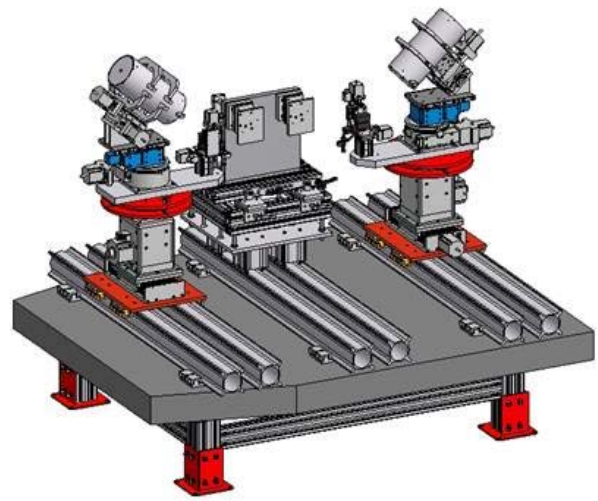

Fig. 2: Schematic of the optics test instrument.

In the area of 1nm optics, a test multilayer has been fabricated using a small deposition system on loan from the physics department at BNL. This multilayer piece has been used to test the reactive-ion-etching procedures that the R&D group is developing as a new way to make a thin slice of multilayer Laue lens. Initial results have been obtained at the Center for Functional Nanomaterials, and characterization of the etched piece is in progress.

Conceptual designs of the six project beamlines are progressing. Heat-load analyses for silicon monochromator crystals for standard undulator beamlines have been completed. Beamline layouts are being finalized, and conceptual design reports are being written and will be discussed at the upcoming Beamline Advisory Team meetings scheduled during the months of July and August.

CONVENTIONAL FACILITIES DIVISION (CFD)

Ring building construction by the general contractor Torcon continues slightly ahead of schedule despite heavy frequent rainfall during June. Mobilization at the site is essentially complete except for future lower tier subcontractors. All CFD procurements, except for the Laboratory Office Buildings (LOBs), have been awarded or released for bid. CFD activity continued to be slightly ahead of schedule, with a Schedule Performance Index (SPI) of 1.05. Cost performance remains on budget with a CPI of 1.02.; as Torcon was able to complete other activities despite the abnormally heavy rainfall for the month.

The major activity planned for June was earthwork. The contractor was ahead of the baseline schedule at the start of June, but frequent heavy rain interfered with excavation of the building footprint, backfilling, and compaction of engineered fill. Better weather in late June enabled earthwork to resume, and that schedule is back on track. Excavation of the utility tunnel area is underway, with Pentant 1 and parts of Pentants 2 and 5 (approximately 50% of the ring building footprint) ready for foundation concrete work to begin. The balance of the building footprint has been excavated to type B material and will be brought to design elevation with engineered fill.

Concrete formwork and pouring operations began in June with completion of the center and secondary reference monuments. Formwork is also underway for the utility tunnel under Pentant 2 and will begin in early July for the Pentants 1, 5, and 2 foundations. The concrete contractor has begun to build a mock-up of the ratchet wall to verify dimensions and positioning of inserts and embedments.

The installation of electrical, water, and storm drain utilities began in June with excellent progress. All utility installations across Brookhaven Avenue except for steam are finished. The completed road crossings will enable rapid installation of electric ductbank and water piping on the site in July. The stormwater system for the site's southwest quadrant has been completed and will continue along the western boundary to the north side of the site in July.

Contractor submittals continue to come in for major elements. More than 600 structural steel shop drawings were received in late June; their review by the project team is being expedited. Most of the raw structural steel has been delivered from the mill to the fabricator so fabrication can begin as soon as the shop drawings are approved.

CFD procurement activities during June included receipt of bids on the Electrical Substation Installation contract and for provision of the 69kV circuit breaker. Both bids were below estimates. The 69kV breaker has been awarded and the Substation Installation package is being processed for award in July. The Chilled Water Plant construction contract was awarded July 1. The Chilled Water Piping contract was put out for bid in June, with bids due July 9. By late July all CF construction contracts should be awarded with the exception of the LOBs.

RECENT HIRES

Alessandro Cunsolo – Associate Physicist – IXS Beamline, XFD
Steven Klare – Electrical Engineer - Injection Systems, ASD
Edmund Kujawski – Mechanical Technician – Vacuum Systems, ASD
Evgueni Nazaretski – Nanopositioning Engineer, XFD
Ruben Reininger – Beamline Development Scientist, XFD
Kurt Vetter – Electrical Engineer - Diagnostics & Instrumentation, ASD

PROCUREMENT ACTIVITIES

The quadrupole magnet proposals were received on June 10 and sextupole magnet proposals were received on June 18. All proposals are being evaluated by the Proposal Evaluation Panel (PEP). The dipole, large aperture, and corrector magnet proposals were posted on FedBizOps on June 3, with proposals due July 9.The electrical substation expansion bids were received on June 11 and are being evaluated.

COST/SCHEDULE BASELINE STATUS

The cumulative Cost Performance Index is 1.04 and the cumulative Schedule Performance Index is 0.96. Both have green status and are well within the DOE acceptable range. The monthly CPI for the project is 0.92 (green status) and the monthly SPI is 0.99 (also green). Both current period variances indicate a significant improvement in performance from the previous month. The critical path for the project has not changed with the June status. The critical and near-critical paths have been reviewed and the project continues to have 250 days of float after the early finish date. An additional float of 160 days is internal to the project, distributed to delivery and installation of the booster and the completion of conventional construction. The ASD schedule is currently under review and will be revised within the next two months.

ARRA activities: Excavation of Pentant 1 foundations started on schedule and is on track for completion by early July. Proposals for the Chilled Water contract and Electrical Substation and Feeder contract have been received for evaluation. Both contracts are expected to be awarded in July.

ENVIRONMENT, SAFETY, AND HEALTH (ESH)

The NSLS-II project continues to work closely with Site Protection Services to assure that the inflow of contractors to the site does not back up at the main gate and that contractor processing is streamlined. On days when large numbers of contractors are expected, administrative assistance from NSLS-II has been provided to the main gate for initial contractor access to the site. A badging station is currently being installed in the NSLS-II construction trailer to allow photo badging. When it is complete, contractors will report directly to the NSLS-II work site for all badging and training.

As site construction activities ramp up, NSLS-II staff is working closely with Torcon and the subcontractors to develop Phase Hazards Analyses (PHAs), which record the work steps, hazards, and controls to reduce the risk of incident. The PHAs also provide a mechanism for feedback from the workers to improve future work.

The BNL Independent Assessment and Oversight Group, in conjunction with Liberty Mutual Insurance Co., is conducting an independent Construction Safety assessment for NSLS-II. Phase One of the assessment (documentation review) will be complete in mid July. Subsequent phases to review training and observe operations will continue throughout the summer. The assessment is expected to end in October. Liberty Mutual has also been engaged to provide follow-on periodic (typically monthly) site visits for construction safety. These visits will be documented and results will be provided to the NSLS-II and Torcon staff as part of the project's focus on continually improving the construction safety program.

Pictured above, from left: U.S. Department of Energy (DOE) Brookhaven Site Office (BHSO) Manager, Michael Holland; Stony Brook University President, Shirley Strum Kenny; DOE-BHSO Federal Project Director for NSLS-II, Frank Crescenzo; Brookhaven National Laboratory (BNL) Associate Lab Director for Light Sources and NSLS-II Project Director, Steve Dierker; DOE Deputy Director for Science Programs, Patricia Dehmer; U.S. Senator Kirsten Gillibrand; U.S. Senator Charles Schumer; BNL Director, Sam Aronson; Battelle Executive Vice President for Global Lab Operations, Ron Townsend.

Concrete forms and reinforcing steel

Completed center monument

Installation of west storm line

Installation of Substation

PROJECT DESCRIPTION

The NSLS-II project is being carried out to design and build a world-class user facility for scientific research using synchrotron radiation. The project scope includes the design, construction, and installation of the accelerator hardware, civil construction, and experimental facilities required to produce a new synchrotron light source. It will be highly optimized to deliver ultra-high brightness and flux and exceptional beam stability. These capabilities will enable the study of material properties and functions down to a spatial resolution of 1 nm, energy resolution of 0.1 meV, and with the ultra-high sensitivity necessary to perform spectroscopy on a single atom.

DOE Project Milestone Schedule

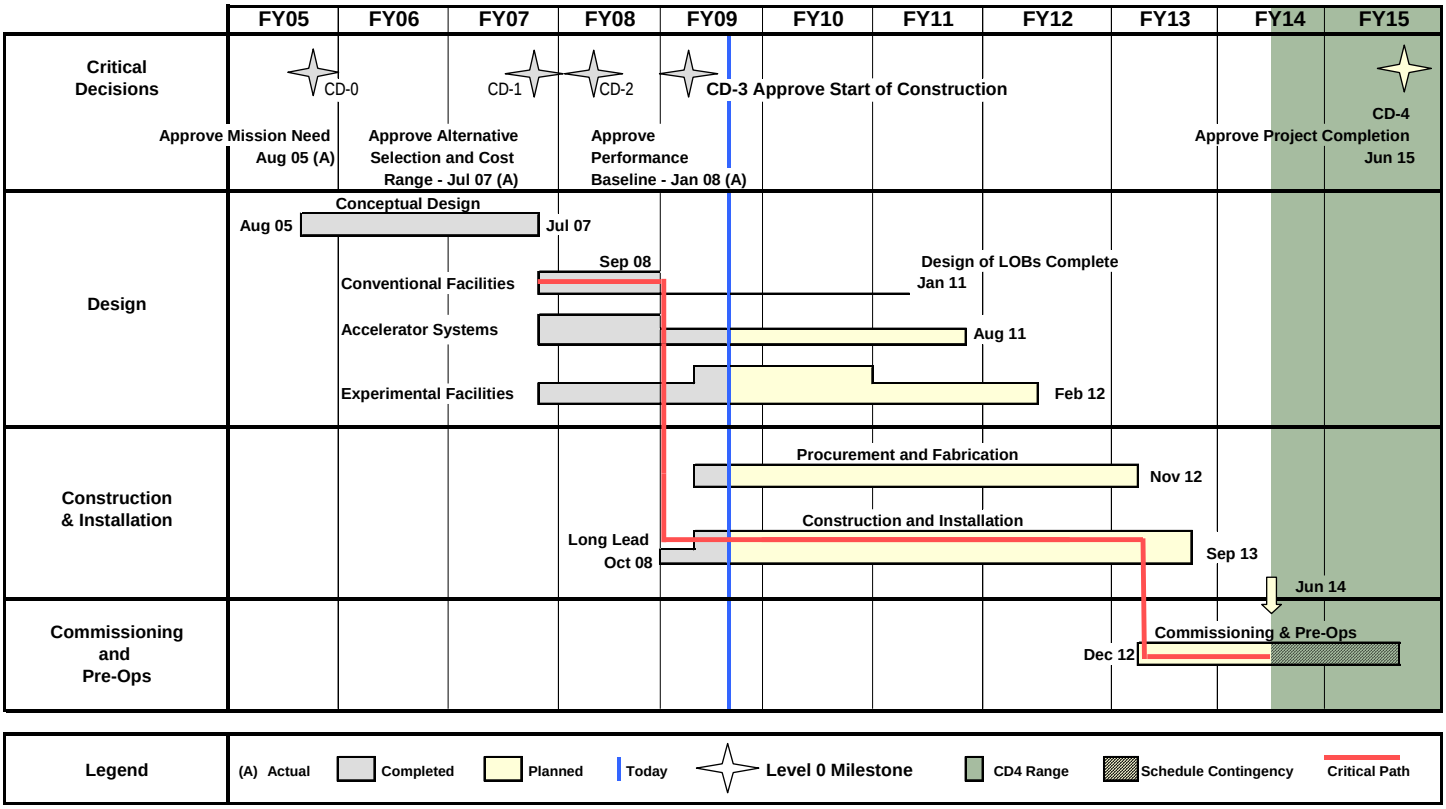

RECENT PROJECT ACCOMPLISHMENTS

- The DOE Status Review of NSLS-II was conducted June 9 – 11.
- The Start-of-Construction ceremony for NSLS-II was held on June 15, with federal, state, and local officials attending.
- An aligned girder was moved on a truck by BNL riggers, manipulated on a fork lift, returned to the lab, and re-measured. Alignment was found to be well within tolerance, validating this approach to achieving the demanding alignment precision required by the NSLS-II storage ring.

Standing water as a result of heavy rains that delayed earthwork in June.

EV for WBS 1 (NSLS-II Project) as of June 30, 2009

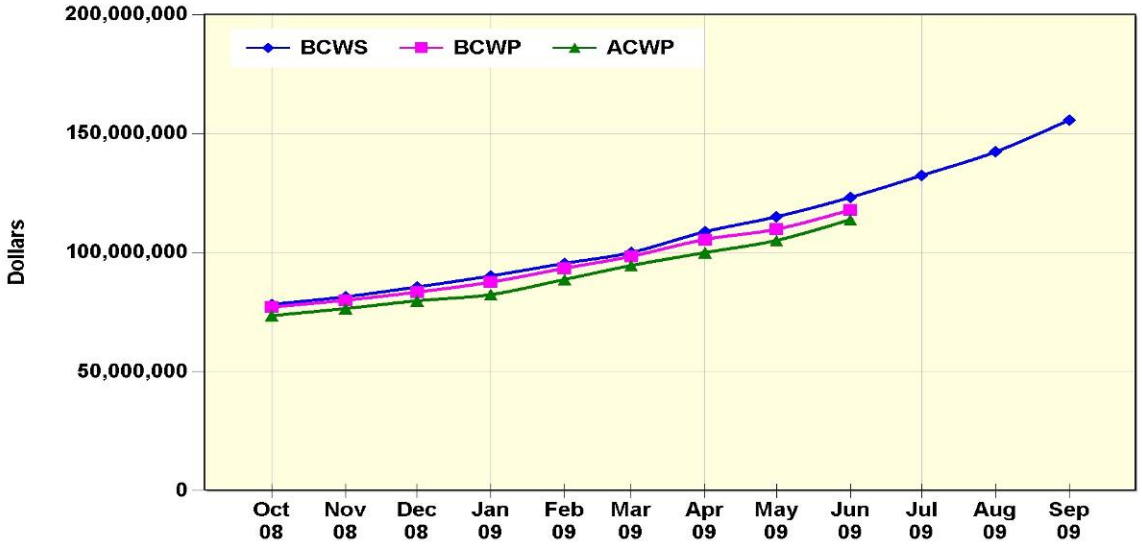

Cumulative to Date (K$)	Oct 08	Nov 08	Dec 08	Jan 09	Feb 09	Mar 09	Apr 09	May 09	Jun 09	Jul 09	Aug 09	Sep 09
BCWS	78,248	81,437	85,551	90,181	95,480	100,025	108,753	115,036	123,163	132,405	142,294	156,656
BCWP	77,088	79,974	83,373	87,572	93,407	98,407	105,508	110,000	117,841			
ACWP	73,505	76,479	79,754	82,330	88,714	94,556	100,000	105,100	113,794			

Project as of 6/30/09	Current Period	Cum-to-date
Plan (BCWS) $K	8,127	123,163
Earned (BCWP) $K	8,040	117,841
Actual (ACWP) $K	8,695	113,794
SV $K	-88	-5,321
CV $K	-655	4,047
SPI	0.99	0.96
CPI	0.92	1.04
Budget at Completion $K (PMB)		741,907
Planned % Complete		16.6%
Earned % Complete		15.9%
Mgmt Rsrv/Cont. as % of BAC remaining		27.3%
Mgmt Rsrv/Cont. as % of EAC remaining		25.5%

Levels 1, 2, 3 Milestones – Near Term		
Level	Description	Baseline Date
L1 00040	CD-3 Approve Start of Construction	Feb09 Actual=Jan09✓
L2 00100	100% Conventional Facility Title II Design Complete	Aug 2008✓
L2 00220	Begin Site Preparation	Nov 2008✓
L2 00240	Issue Ring Building NTP	Jun09 Actual=Mar09✓
L2 00260	Contract Award for Booster System	Mar 2010
L3 05732	40% Accelerator Design Complete	Feb 2008✓
L3 05735	60% Conventional Facility Title II Design Complete	May 08✓
L3 05765	Conventional Facility Site Prep Complete	Jan09 Actual=Feb09✓
L3 05770	Accelerator SR Magnet Design Complete	Feb 2009✓
L3 05780	Exp. Facilities – Prelim. Design End Stations 1 Complete	June 2010

✓ = Completed; on schedule, unless otherwise noted

Schedule Performance Index, Project to Date:

SPI **0.96**

Cause & Impact: No reportable variance.
Corrective Action: None Required.

Cost Performance Index, Project to Date:

CPI **1.04**

Cause & Impact: No reportable variance.
Corrective Action: None Required.

ACWP = Actual Cost of Work Performed
BAC = Budget at Completion
BCWP = Budgeted Cost of Work Performed
BCWS = Budgeted Cost of Work Scheduled
CPI = Cost Performance Index (BCWP/ACWP)
EV = Earned Value
IPT = Integrated Project Team
PMB = Performance Measurement Baseline
SPI = Schedule Performance Index
WBS = Work Breakdown Structure

SPI or CPI in the range of:	
	0.9 – 1.15 is green
	0.85 – 0.89 or 1.16 – 1.25 is yellow
	<0.85 or >1.25 is red

The June PMB remains the same as May.

The Integrated Project Team (IPT) can find further details on NSLS-II cost and schedule data at http://www.bnl.gov/nsls2/project/IPT/default.asp.

Funding Profile (revised to reflect ARRA funding)

	NSLS-II Funding Profile ($M)												
Fiscal Year	FY05	FY06	FY07	FY08	FY09	FY10	FY11	FY12	FY13	FY14	FY15	FY16	TOTAL
R&D			3.0	20.0	10.0	2.0	0.8						35.8
OPC	1.0	4.8	19.0										24.8
PED			3.0	29.7	27.3								60.0
Construction					216.0	139.0	151.6	151.4	46.9	26.3			731.2
Pre-Ops							0.7	7.7	24.4	22.4	5.0		60.2
Total NSLS-II Project	1.0	4.8	25.0	49.7	253.3	141.0	153.1	159.1	71.3	48.7	5.0		912.0

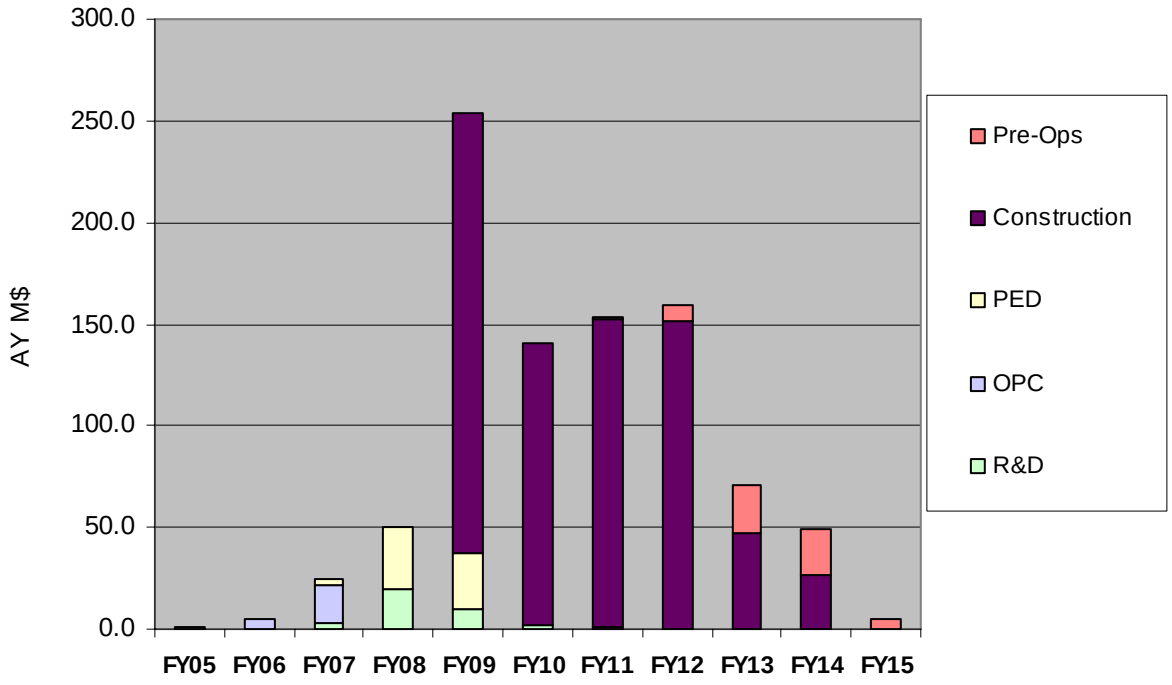

Key Personnel

Title	Name	Email	Phone
Federal Project Director	Frank Crescenzo	crescenzo@bnl.gov	631-344-3433
NSLS-II Project Director	Steve Dierker	dierker@bnl.gov	631-344-4966
NSLS-II Deputy Project Director	Aesook Byon	byon@bnl.gov	631-344-3601
NSLS-II Assistant Project Director for Conventional Construction	James Yeck	yeck@bnl.gov	631-344-4535
NSLS-II Associate Project Director for Life Sciences	Wayne Hendrickson	whendrickson@bnl.gov wayne@convex.hhmi.columbia.edu	631-344-5681
NSLS-II Senior Project Advisor	Satoshi Ozaki	ozaki@bnl.gov	631-344-5590
NSLS-II Accelerator Systems Division Director	Ferdinand Willeke	willeke@bnl.gov	631-344-2216
NSLS-II Experimental Facilities Division Director	Qun Shen	qshen@bnl.gov	631-344-3465
NSLS-II Conventional Facilities Division Director	Martin Fallier	fallier@bnl.gov	631-344-3475
NSLS-II Project Support Division Director	Diane Hatton	dhatton@bnl.gov	631-344-5073

CLASSIFICATION (When Filled In)

CONTRACT PERFORMANCE REPORT
FORMAT 1 - WORK BREAKDOWN STRUCTURE

FORM APPROVED
OMB No. 0704-0188

1. CONTRACTOR	2. CONTRACT	3. PROGRAM	4. REPORT PERIOD
a. NAME Brookhaven Science Associates	a. NAME	a. NAME EV8 - June 2009	a. FROM (YYYYMMDD) 2009 / 06 / 01
b. LOCATION (Address and ZIP Code) Brookhaven National Laboratory, Upton,NY	b. NUMBER	b. PHASE	b. TO (YYYYMMDD) 2009 / 06 / 30
	c. TYPE / d. SHARE RATIO	c. EVMS ACCEPTANCE NO YES X (YYYYMMDD)	

5. CONTRACT DATA

a. QUANTITY	b. NEGOTIATED COST	c. ESTIMATED COST OF AUTHORIZED UNPRICED WORK	d. TARGET PROFIT/ FEE	e. TARGET PRICE	f. ESTIMATED PRICE	g. CONTRACT CEILING	i. DATE OF OTB/OTS (YYYYMMDD)
1	912,000,000	0	0	912,000,000	0	0	

8. PERFORMANCE DATA

WBS[2] / WBS[3] / Control Acct / ITEM (1)	CURRENT PERIOD: BUDGETED COST WORK SCHEDULED (2)	BUDGETED COST WORK PERFORMED (3)	ACTUAL COST WORK PERFORMED (4)	VARIANCE SCHEDULE (5)	VARIANCE COST (6)	CUMULATIVE TO DATE: BUDGETED COST WORK SCHEDULED (7)	BUDGETED COST WORK PERFORMED (8)	ACTUAL COST WORK PERFORMED (9)	VARIANCE SCHEDULE (10)	VARIANCE COST (11)	AT COMPLETION: BUDGETED (14)	ESTIMATED (15)	VARIANCE (16)
1.01 Project Management													
1.01.01 Project Management													
WBS[3]Totals:	102,544	102,544	139,624	0	-37,080	1,887,859	1,887,859	2,197,390	0	-309,531	6,692,091	6,692,091	-0
1.01.02 Environmental, Safety & Health													
WBS[3]Totals:	81,369	81,369	92,328	0	-10,959	1,448,118	1,448,118	1,689,539	0	-241,421	6,154,591	6,154,591	-0
1.01.03 Project Support													
WBS[3]Totals:	819,954	819,954	959,264	0	-139,310	10,914,696	10,914,696	11,156,276	-0	-241,580	36,375,556	38,375,556	-2,000,000
1.01.04 Quality Assurance													
WBS[3]Totals:	52,249	52,249	43,152	0	9,096	854,947	854,947	580,406	0	274,541	3,073,212	3,073,212	0
1.01.05 Configuration Management & Document Control													
WBS[3]Totals:	27,545	27,545	24,023	0	3,522	556,245	556,245	428,658	0	127,587	1,972,567	1,972,567	-0
WBS[2]Totals:	**1,083,661**	**1,083,661**	**1,258,392**	**0**	**-174,730**	**15,661,865**	**15,661,865**	**16,052,268**	**-0**	**-390,404**	**54,268,016**	**56,268,017**	**-2,000,000**
1.02 R&D and Conceptual Design													
1.02.01 Accelerator Systems R&D													
WBS[3]Totals:	30,480	125,874	108,186	95,393	17,688	8,890,323	8,384,794	8,577,394	-505,529	-192,600	11,460,076	11,460,076	-0
1.02.02 Experimental Systems R&D													
WBS[3]Totals:	132,859	189,001	561,098	56,142	-372,098	10,178,684	9,757,991	8,288,898	-420,694	1,469,093	19,166,553	19,163,549	3,005
1.02.03 Conceptual Design - Accelerator Systems													
WBS[3]Totals:	0	0	0	0	0	12,998,214	12,998,214	12,953,527	0	44,686	12,998,214	12,998,214	0
1.02.04 Conceptual Design - Experimental Facilities													
WBS[3]Totals:	0	0	0	0	0	709,445	709,445	712,450	0	-3,005	709,445	712,450	-3,005
1.02.05 Conceptual Design - Conventional Facilities													
WBS[3]Totals:	0	0	0	0	0	3,886,952	3,886,952	3,872,878	0	14,074	3,886,952	3,886,952	0
1.02.06 Conceptual Design - Project Management & Support													
WBS[3]Totals:	0	0	0	0	0	7,086,188	7,086,188	7,325,314	0	-239,126	7,086,188	7,325,314	-239,126
1.02.07 Project Management - R&D													
WBS[3]Totals:	51,789	51,789	38,646	0	13,144	4,515,720	4,515,720	4,657,691	0	-141,971	5,305,339	5,066,213	239,125
WBS[2]Totals:	**215,129**	**366,663**	**707,929**	**151,535**	**-341,266**	**48,265,526**	**47,339,303**	**46,388,152**	**-926,223**	**951,151**	**60,612,767**	**60,612,767**	**-0**
1.03 Accelerator Systems													
1.03.01 Accelerator Systems Management													
WBS[3]Totals:	113,493	113,493	119,761	0	-6,268	1,840,044	1,840,044	1,562,102	0	277,942	6,019,099	11,081,099	-5,062,000
1.03.02 Accelerator Physics													
WBS[3]Totals:	214,407	214,407	163,628	0	50,779	2,115,025	2,115,025	1,806,760	0	308,266	10,071,767	10,071,767	-0
1.03.03 Injection System													
WBS[3]Totals:	258,084	94,513	135,919	-163,572	-41,407	1,827,470	1,204,411	747,909	-623,059	456,502	39,905,613	40,636,613	-731,000
1.03.04 Storage Ring													
WBS[3]Totals:	979,985	678,451	732,844	-301,534	-54,393	12,184,365	10,137,849	9,172,716	-2,046,517	965,133	140,726,562	145,310,563	-4,584,000
1.03.05 Controls Systems													
WBS[3]Totals:	272,718	140,935	262,269	-131,783	-121,334	2,917,135	1,967,703	2,132,041	-949,432	-164,338	20,121,954	20,121,953	0
1.03.06 Accelerator Safety Systems													
WBS[3]Totals:	38,523	6,593	46,221	-31,930	-39,628	529,187	523,789	364,194	-5,398	159,595	4,297,433	4,506,433	-209,000
1.03.07 Insertion Devices													
WBS[3]Totals:	63,126	28,719	18,328	-34,407	10,391	1,019,789	475,901	360,308	-543,888	115,593	25,237,478	29,310,479	-4,073,000
1.03.08 Accelerator Fabrication Facilities													
WBS[3]Totals:	611,892	426,633	266,121	-185,259	160,512	3,958,600	2,709,644	2,882,674	-1,248,956	-173,030	5,722,387	6,169,297	-446,910
WBS[2]Totals:	**2,552,229**	**1,703,744**	**1,745,091**	**-848,485**	**-41,347**	**26,391,614**	**20,974,365**	**19,028,703**	**-5,417,249**	**1,945,662**	**252,102,293**	**267,208,203**	**-15,105,910**
1.04 Experimental Facilities													
1.04.01 Experimental Facilities Management													
1.04.01 Experimental Facilities Management	87,917	87,917	136,893	0	-48,975	1,239,296	1,239,296	1,524,753	0	-285,457	4,568,673	5,067,924	-499,251
WBS[3]Totals:	87,917	87,917	136,893	0	-48,975	1,239,296	1,239,296	1,524,753	0	-285,457	4,568,673	5,067,924	-499,251
1.04.02 Standard Local Controls & Data Acquisition Systems													
1.04.02 Standard Local Controls & Data Acquisition Systems	3,151	0	0	-3,151	0	16,003	8,505	0	-7,498	8,505	69,585	69,585	-0
WBS[3]Totals:	3,151	0	0	-3,151	0	16,003	8,505	0	-7,498	8,505	69,585	69,585	-0
1.04.05 User Instruments													
WBS[3]Totals:	188,913	170,456	106,344	-18,457	64,112	2,459,786	2,246,945	1,303,573	-212,840	943,373	63,573,084	67,573,084	-4,000,000
1.04.06 Front End User Requirements Development													
1.04.06 Front End User Requirements Development	0	0	0	0	0	456	456	1,205	-0	-749	456	1,205	-749
WBS[3]Totals:	0	0	0	0	0	456	456	1,205	-0	-749	456	1,205	-749
1.04.07 Optics Labs													
WBS[3]Totals:	4,346	167,069	44,370	162,723	122,699	818,339	633,098	446,119	-185,241	186,979	2,072,162	2,072,162	0
WBS[2]Totals:	**284,327**	**425,442**	**287,607**	**141,115**	**137,836**	**4,533,879**	**4,128,300**	**3,275,650**	**-405,579**	**852,650**	**70,283,960**	**74,783,960**	**-4,500,000**
1.05 Conventional Facilities													
1.05.01 Conventional Facilities Management													
1.05.02 Conventional Facilities Engineering and Design													
WBS[3]Totals:	183,349	141,822	229,020	-41,526	-87,198	14,068,421	14,119,409	14,015,129	50,989	104,280	20,673,299	23,342,952	-2,669,653
1.05.03 Conventional Facilities Construction													
WBS[3]Totals:	3,417,293	4,100,320	4,190,385	683,028	-90,065	10,731,844	12,188,728	11,744,354	1,456,883	444,374	217,414,846	235,514,846	-18,100,000
1.05.04 Integrated Controls & Communications													
1.05.04 Integrated Controls & Communications	90,000	0	0	-90,000	0	105,000	0	0	-105,000	0	561,273	961,273	-400,000
WBS[3]Totals:	90,000	0	0	-90,000	0	105,000	0	0	-105,000	0	561,273	961,273	-400,000
1.05.05 Standard Equipment													
WBS[3]Totals:	0	0	0	0	0	0	0	0	0	0	1,025,586	1,025,586	0
1.05.06 Conventional Facilities Commissioning													
WBS[3]Totals:	2,500	0	1,168	-2,500	-1,168	12,500	37,233	28,856	24,733	8,377	578,000	578,000	0
WBS[2]Totals:	**3,991,899**	**4,460,127**	**4,695,532**	**468,228**	**-235,405**	**28,309,940**	**29,737,544**	**29,049,706**	**1,427,605**	**687,839**	**254,440,009**	**275,646,248**	**-21,206,239**
1.06 Pre-Operations													
1.06.01 Management - Pre Ops													
WBS[3]Totals:	0	0	0	0	0	0	0	0	0	0	20,170,700	20,170,700	0
1.06.02 Accelerator Systems - Pre Ops													
WBS[3]Totals:	0	0	0	0	0	0	0	0	0	0	17,071,591	17,071,591	-0
1.06.03 Experimental Facilities - Pre Ops													
WBS[3]Totals:	0	0	0	0	0	0	0	0	0	0	3,823,660	3,823,660	0
1.06.04 Spares													
1.06.04 Spares	0	0	0	0	0	0	0	0	0	0	9,134,454	9,134,454	-0
WBS[3]Totals:	0	0	0	0	0	0	0	0	0	0	9,134,454	9,134,454	-0
WBS[2]Totals:	**0**	**0**	**0**	**0**	**0**	**0**	**0**	**0**	**0**	**0**	**50,200,405**	**50,200,405**	**0**
b. Cost of Money	0	0	0	0	0	0	0	0	0	0	0	0	0
c. Gen. and Admin.	0	0	0	0	0	0	0	0	0	0	0	0	0
d. Undist. Budget											0	0	0
e. Sub Total	8,127,246	8,039,638	8,694,550	-87,608	-654,912	123,162,824	117,841,378	113,794,478	-5,321,446	4,046,899	741,907,450	784,719,599	-42,812,149
f. Contingency/Mgmt Reserve											170,092,550		
g. Total	8,127,246	8,039,638	8,694,550	-87,608	-654,912	123,162,824	117,841,378	113,794,478	-5,321,446	4,046,899	912,000,000		
9. Reconciliation to CBB													
a. Variance Adjustment													
b. Total Contract Variance									-5,321,446	4,046,899	912,000,000	784,719,599	127,280,401