NSLS-II EXperimental Tools (NEXT)

Progress Report

May 2012

Graphics related to three of the six NEXT beamlines are shown below and discussed in the reports.

ISR

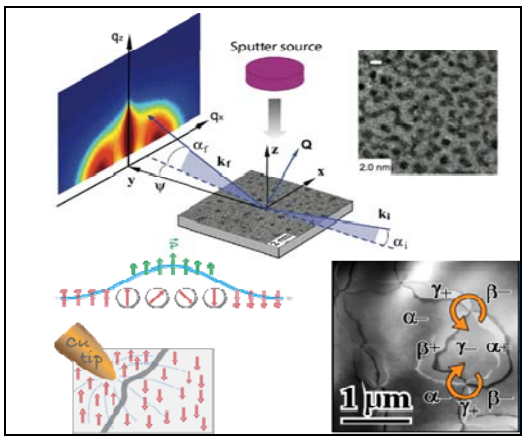

SIX

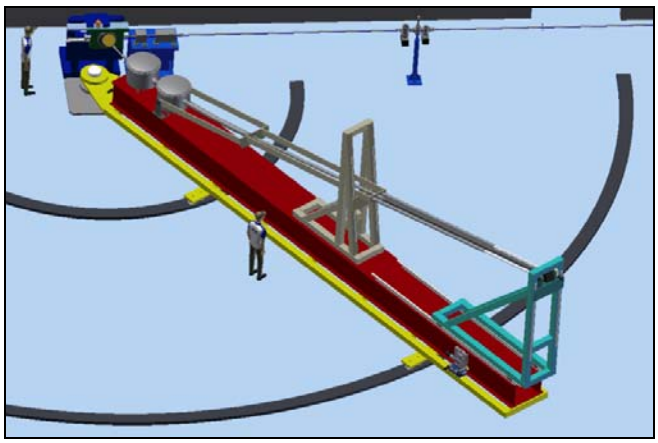

SMI

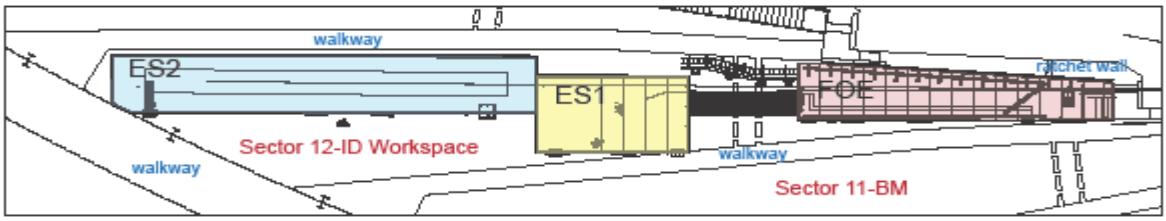

Report due date: June 20, 2012

Steve Hulbert
NEXT Project Manager

Brookhaven National Laboratory
Upton, New York 11973

OVERALL ASSESSMENT

The NSLS-II Experimental Tools (NEXT) project will provide NSLS-II with additional "best-in-class" beamlines that support the identified needs of the U.S. research community, as well as the DOE mission to tackle the discoveries required in order to reach the transformational solutions needed for the next generation of sustainable energy technologies. Implementation of this state-of-the-art instrumentation will significantly increase the scientific quality and productivity of NSLS-II and support the urgent needs identified by the U.S. research community, while simultaneously expanding our knowledge of fundamental energy science. The NEXT project will also provide a significant capacity for NSLS-II to support the wide-ranging research programs of the user community.

The project made steady progress on the preliminary design, including the preparation of the required documents for the CD-2 review. Project scope and schedule have been revised based on the latest funding profile guidance; the overall project completion date will be delayed by one year compared to the schedule presented at the CD-1 DOE review in 2011.

COMMON BEAMLINE SYSTEMS

Systems common to all six NEXT beamlines include the hutches, hutch labyrinths, personnel protection system (PPS), equipment protection system, and control station equipment.

Cost and schedule estimates for common beamline systems have been refined and coordinated with installation schedules for the NEXT beamlines as the Preliminary Design Review (PDR) report is being prepared.

ESM – ELECTRON SPECTROMICROSCOPY

Calculations have been performed to evaluate the power and flux performance of the two permanent magnet elliptically polarized undulator (EPU) insertion devices (EPU105 and EPU56) planned for the Electron Spectromicroscopy (ESM) beamline. Mechanical engineering thermal analysis of the ESM optical elements subjected to these power loads is underway, as are updated ray tracing simulations (Shadow) for the entire ESM beamline. The results of these analyses are being used to estimate the required tolerance, accuracy, repeatability, and resolution of the mechanical movements of the various ESM optical components. Over the last few months, the ESM team has concentrated on the optical design of a single branch that can accommodate all three endstations (the "3-in-1" design).

The micro-ARPES endstation at ESM will be provided by the ARPES endstation at NSLS beamline U5UA, following upgrade to add microprobe capabilities. The electron energy analyzer in this endstation has recently been upgraded by the addition of the latest state-of-the-art electron energy analyzer from Scienta, Inc. Figure 1 shows the first band map image taken using this analyzer at U5UA.

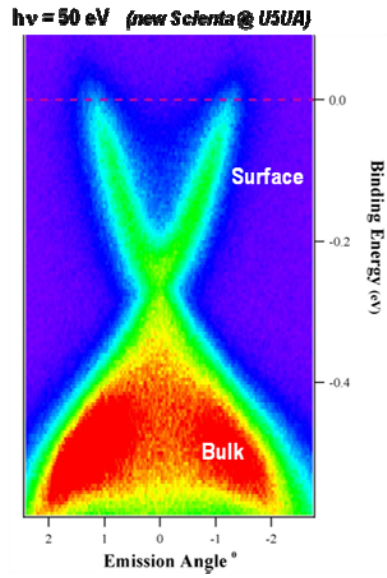

Figure 1. 2D surface state of the topological insulator Bi_2Se_3.

FXI – FULL-FIELD X-RAY IMAGING

Simulations have been performed to optimize the beamline optics design and to determine their specifications. Preliminary layout of the first optical enclosure has been completed. Thermal loads on beamline optics have been calculated. The Beamline Advisory Team (BAT) meeting was held on April 2. Discussions were initiated with TXM vendor XRADIA regarding upgrades needed for FXI.

Figure 2. 3D reconstructed rendering of a standard Siemens star pattern with 30 nm finest feature using the TXM running at NSLS X8C. [Jun Wang et al., Applied Physics Letters 100, 143107, 2012]

ISR–IN-SITU AND RESONANT HARD X-RAY

Some capabilities of the In-situ and Resonant Hard X-ray (ISR) beamline were represented conceptually by members of the ISR team in the graphic shown on the cover, middle row left. These capabilities include real-time GISAXS studies during deposition, and multiferroic domain and domain wall characterization.

Following the April 13 BAT meeting and discussions with vendors that took place during the NSLS Users' Meeting, suggested changes to the ISR preliminary design were evaluated with respect to their impact on beam focusing at the various endstations.

Initial plans for Si(111) phase plate characterization were discussed with the group leader for magnetic materials at APS. This development work is required to provide

polarization control in the 2.4–3 keV energy range, which is an important part of the ISR scope. A rocking curve of a candidate phase plate, which was measured at NSLS beamline X16B, is shown in Figure 3.

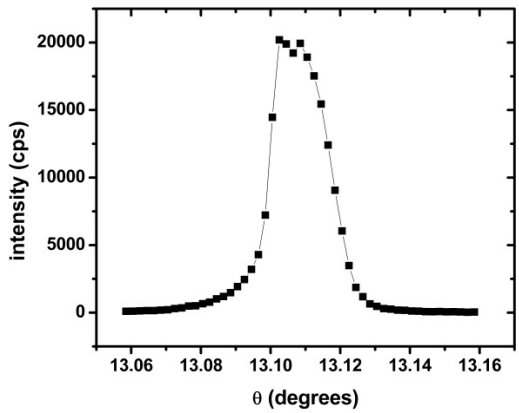

Figure 3. Rocking curve of a candidate phase plate, 10 µm thick S(111).

Finally, discussions with DESY were initiated in order to obtain drawings of the dual phase plate assembly at PETRA III's resonant scattering beamline P09.

ISS – INNER SHELL SPECTROSCOPY

The ISS photon delivery system has been optimized to allow user-friendly operations, fast scanning capabilities, and fast switching of the energy range. The optical design of all high heat-load optical components was reevaluated by calculating the absorbed and scattered power, by simulating the thermally induced surface figure errors, and finally by calculating the effects on the resulting focal spot size via photon ray tracing.

Based on a model that describes the sample response under expected ISS beam conditions, various detection concepts were analyzed and two systems were selected. Specifications of the individual components were derived and feedback from potential vendors was included in the preliminary designs of the photon delivery and detection systems.

The first ISS BAT meeting was held on 16–17 April 2012, at which time the beamline and endstation preliminary designs were presented. Valuable input and feedback were received from the BAT and, through them, from the larger synchrotron x-ray spectroscopy community. In particular, the growing potential of various novel spectroscopic tools such as those used to obtain the novel results shown in Figure 4 were pointed out.

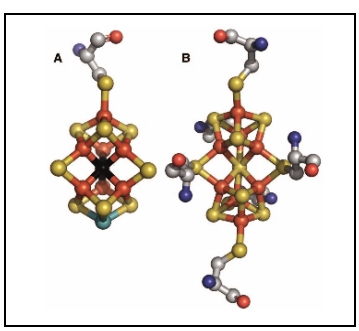

Figure 4: X-ray Emission Spectroscopy helps resolve the structure of nitrogenase, a complex enzyme in the bio-sphere that reduces N_2 to NH_3. Kyle M. Lancaster, et al., *Science* 334, 974 (2011).

SIX – SOFT INELASTIC X-RAY

For beamline optics design, calculations of the power density absorbed by the first three optical components (horizontal deflection mirror, plane mirror, plane grating monochromator) have been performed and submitted for FEA analysis. The 2D and 3D optical layouts of the beamline have been completed, and are in progress for the spectrometer.

SIX beamline staff took advantage of the opportunity to meet with various equipment vendors at the May 21–23 NSLS Users' meeting. We discussed the various optical and mechanical requirements of the SIX beamline and endstation. Information such as the slope error of gratings and mirrors and the mechanical stability of the mechanisms that hold these optics was encouraging with regards to our requirements, and will be very valuable when procurements are prepared.

The rendering on the cover (middle row, right) shows a schematic representation of the 15 m-radius soft x-ray emission spectrometer in the SIX endstation.

SMI – SOFT MATTER INTERFACES

SMI's canted undulator design with two endstations has been solidified, anticipating a time-sharing arrangement with one source serving both stations. Hutch layout is complete, including details such as labyrinth and cable run placement, given the known requirements for utilities and control electronics. Details of the optical element locations are still being developed, but the designs under consideration all fit within the footprint.

Photon delivery is a challenge for a canted undulator pair, given SMI's requirement for two independent stations, each with a wide x-ray energy range—from 2 to 20 keV in one case, and 6.5 to 24 keV in the other. The SMI team discussed many issues with NSLS-II frontend engineering groups and with vendors of photon delivery components, and is working to find solutions for the issues raised.

The preliminary design of the SMI beamline was presented at the first SMI BAT meeting held on May 4, 2012. Following the BAT meeting, several important aspects of endstation design were revisited. The scientific and technical concerns of the advisory team led to further quantitative analysis of SMI's novel tender energy GISAXS capabilities and of scattering geometries for both endstations.

PROJECT MILESTONES

CD-0 (Mission Need):	Planned: 3Q10	Actual: May 27, 2010
CD-1 (Alternative Selection):	Planned: 4Q11	Actual: Dec. 19, 2011
CD-2 (Performance Baseline):	Planned: 1Q13	Previous: 4Q12
CD-3 (Start Construction):	Planned: 4Q13	Previous*: 2Q13
Early Project Completion:	Planned: 4Q16	Previous*: 4Q15
CD-4 (Project Completion):	Planned: 4Q17	Previous*: 3Q16

*Re-planned and re-scheduled to accommodate new funding profile

LOOKING AHEAD

The NEXT cost and schedule systems were frozen at the end of May 2012 in order to begin EVMS tracking. Going forward, all cost and schedule changes will be handled by the Project Change Request (PCR) process.

Regarding staffing, one open mechanical engineering position is to be filled by the end of FY12 and the beamline scientist positions are to be filled by the end of FY13 or early FY14. All other NEXT project staff are either hired and in place or matrixed from the BNL Photon Sciences directorate.

Partner Users will serve an important role in the NEXT project by providing pieces of the scientific program and contributing associated endstation hardware and support. Discussions with planned partners have been underway since the early phases of the NEXT project, are continuing through May and June 2012, and will lead to Partner User Proposals for most of the NEXT project beamlines.

UPCOMING EVENTS

ISR Beamline Advisory Team (BAT) Meeting	April 13
ISS BAT Meeting	April 16-17
FXI BAT Meeting	April 2
SMI BAT Meeting	May 4
ALD's Preliminary Design Report (PDR) Review	Aug 7–9
DOE CD-2 Review of NEXT Project	Sep 11–13

PROJECT SCHEDULE

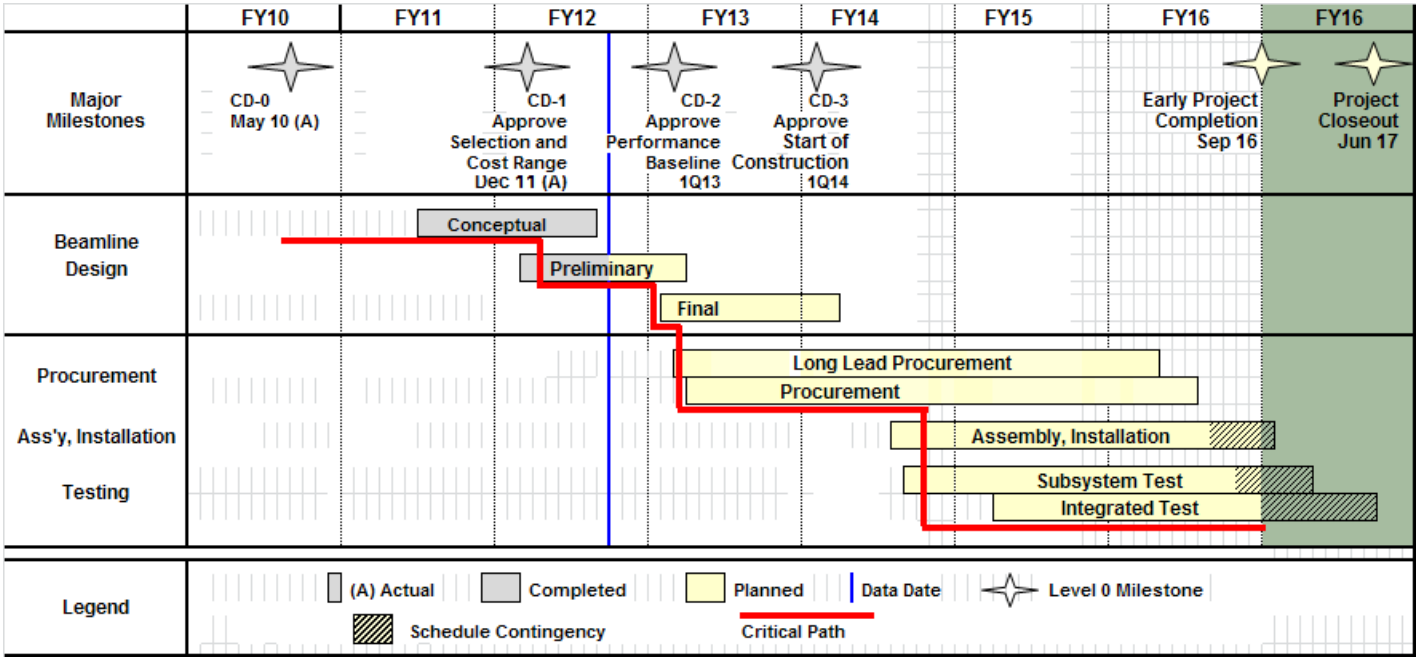

Funding Profile

	NEXT Funding Profile ($M)						
Funding Type	FY11	FY12	FY13	FY14	FY15	FY16	TOTAL
OPC (CDR)	3.0						3.0
TEC (Design)		3.0	2.0				5.0
TEC (Fabrication)		9.0	10.0	25.9	21.6	15.5	82.0
Total Project Cost	3.0	12.0	12.0	25.9	21.6	15.5	90.0

Cost and Staffing Report

	Current Period		Cumulative-to-date	
As of 5/31/2012	Planned*	Actual	Planned*	Actual
Cost $K		$277,849		$1,937,617
Staffing (FTE-year)		1.4		8.4

*Planned values will be included once EVMS tracking has begun.

Key Personnel

Title	Name	Email	Phone
Federal Project Director	Robert Caradonna	rcaradonna@bnl.gov	631-344-2945
NEXT Project Manager	Steve Hulbert	hulbert@bnl.gov	631-344-7570