NSLS-II Experimental Tools (NEXT)

January 2013 Project Activity

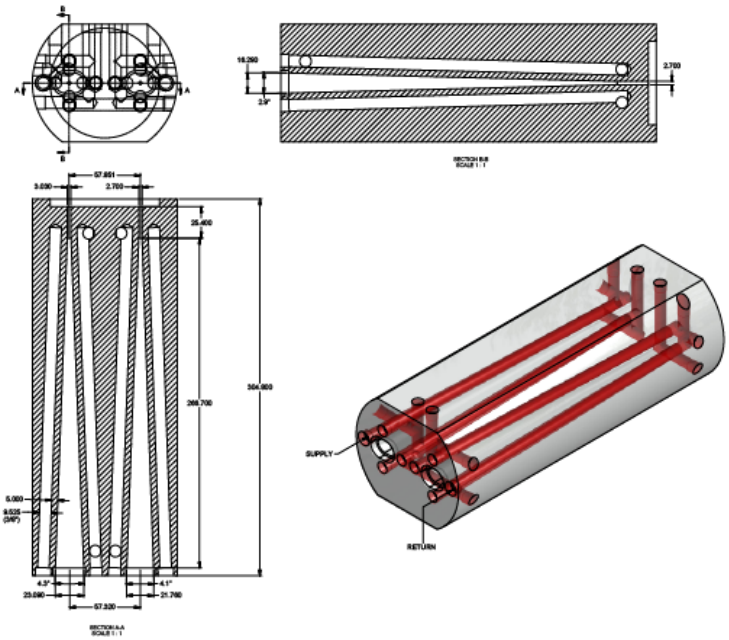

Figure 1. CAD drawings and 3D rendering of a mask designed for SMI canted white beams in the First Optics Enclosure. Figure 6 on p. 3 provides contour plots of the power density produced by the SMI undulators.

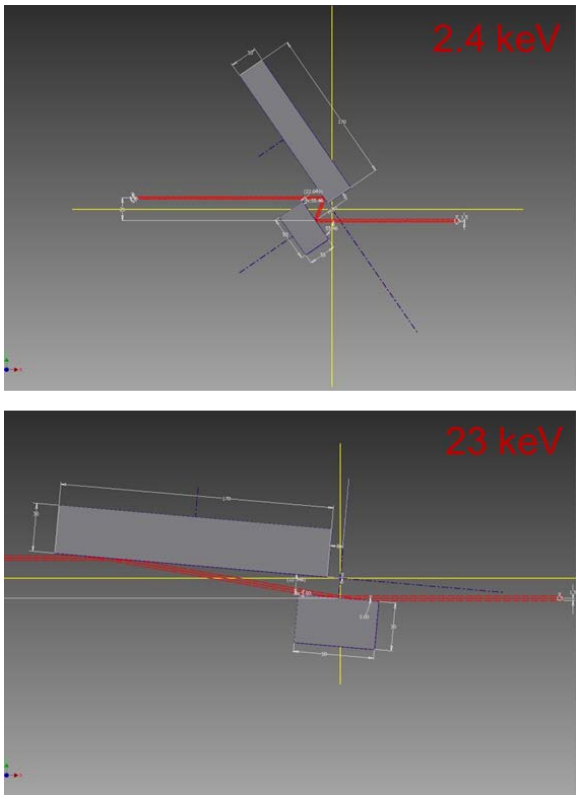

Figure 2. ISR fixed-exit, double-crystal monochromator (DCM) design with long second crystal to avoid one translational degree of freedom. Top and bottom panels show the DCM at the lower and upper ends, respectively, of the ISR energy range. Photon beam propagating from right to left is shown in red.

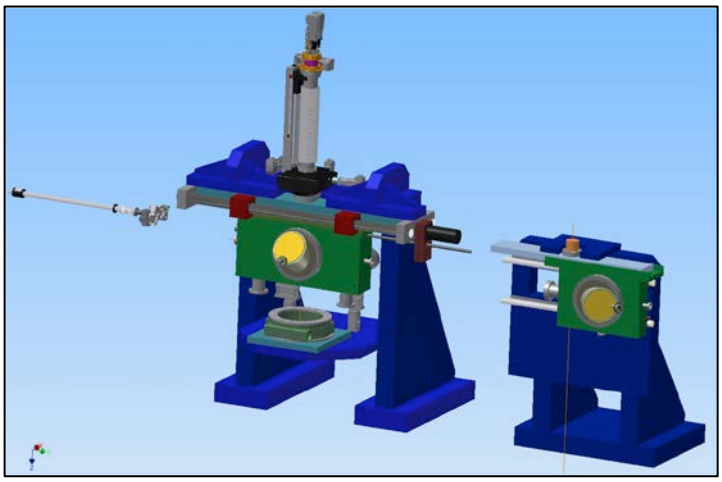

Figure 3. SIX 3D renderings of the sample chamber: previous (right) and new (left) designs. In the new design, the sample chamber (the green part in the figure) is larger, to accommodate the parabolic horizontal collection mirrors inside. This will result in a gain in through-put for the spectrometer.

Steve Hulbert
NEXT Project Manager

BROOKHAVEN NATIONAL LABORATORY

Upton NY 11973

OVERALL ASSESSMENT

The NEXT Project made excellent progress on advancing preliminary design work while refining scope, cost, and schedule for the upcoming project baseline reviews. The recommendations from the internal cost and schedule review conducted in December 2012 have been addressed. Final preparations for the external review of the Preliminary Design Report are in full gear. This external review has been commissioned by the Associate Laboratory Director for Photon Sciences and is scheduled to be held March 6–7. The review committee has been asked to evaluate the readiness of the NEXT project to be baselined, specifically for its scope, cost, schedule, and management. The committee is also charged with evaluating the appropriateness and technical readiness of the proposed long-lead procurement items.

Over the past couple of months, NSLS-II Project management conducted a further evaluation of its contingency spend plan and revised this plan to exclude procurement of one type of insertion device (EPUs) but instead to include procurement of greater quantities than previously planned of some com–mon beamline components such as hutches, safety equipment, racks, and other utility hardware. Accordingly, the NEXT Project scope was adjusted to include 2 EPUs (one for ESM and one for SIX), while capitalizing on the investments in common beamline components made by the NSLS-II Project. The updated NEXT Project plan reflects these changes.

Preparation of Specifications, SOWs, and layout drawings for the shielded enclosures for all beamlines continued, for expected hand-off to procurement in February. Specifications and SOWs for the photon delivery systems are being prepared to be ready for on-schedule issuance of the proposed long-lead procurements in calendar year 2013.

ISR – IN-SITU AND RESONANT HARD X-RAY

Drawings of the four ISR hutches were completed, and concentrated design effort shifted to the optical layout and full specification of the double-crystal monochromator (DCM). The DCM is a planned long-lead procurement for ISR.

Figure 2 (cover) shows a fixed-exit DCM design that avoids one translational degree of freedom. This design requires a long second crystal, greater than 15 cm, since the beam will walk across its surface as the incidence angle is changed between ~5 degrees (23 keV) and ~55 degrees (2.4 keV). Additional DCM designs are being investigated, with particular attention placed on maximizing the beam stability.

FXI – FULL-FIELD X-RAY IMAGING

Design of utility routing and cable trays for the beamline and endstations began. The team also started working on layout of the first optics enclosure (FOE), to determine reasonable stay-clear zones for a potential future upgrade of FXI to add a parallel fixed-energy transmission x-ray microscopy (TXM) beamline with a 1 m horizontal offset from the FXI beamline.

Two Laboratory Directed R&D (LDRD) proposals related to FXI have been funded, one to develop techniques for image data analysis and another to establish workflow interfaces. A collaboration between the BNL Computation Science Center and the FXI and HXN beamlines in the Photon Sciences Directorate has been established to carry out these projects. This collaboration will greatly benefit the FXI user community in extracting scientifically relevant information from TXM images.

ESM – ELECTRON SPECTRO-MICROSCOPY

Final optical design of the ESM photon delivery system continued, with analysis and optimizing of optical matching between the refocused beam spot size and the acceptance parameters of the XPEEM photoelectron microscope. Downstream of the monochromator, the ESM beamline splits into two branches: μ-ARPES and XPEEM. The focused spot size at the XPEEM endstation, approximately 80 μm in both the horizontal and vertical directions, is obtained with a toroidal mirror (Fig. 4, left panel). However, the horizontal beam size seen by the XPEEM microscope is increased by a factor of ~3 owing to this microscope's ~17° grazing angle of incidence geometry. A corresponding net loss of throughput will therefore occur (the largest XPEEM field of view is ~100 μm). A possible solution is to utilize an ellipsoidal surface figure for this mirror (right panel, Fig. 4). The horizontal spot size would be reduced to ~30 μm and would be an ideal match to the XPEEM acceptance in the horizontal direction. The vertical spot size would also be reduced and would underfill the XPEEM acceptance in the vertical direction. No flux would be lost, but the sample would require vertical scanning when the larger XPEEM fields of view are being used. This scanning can be automated, synchronizing the ellipsoidal mirror pitch with the XPEEM image acquisition. The two alternatives will be discussed during the next ESM BAT meeting (Feb. 19–20, 2013).

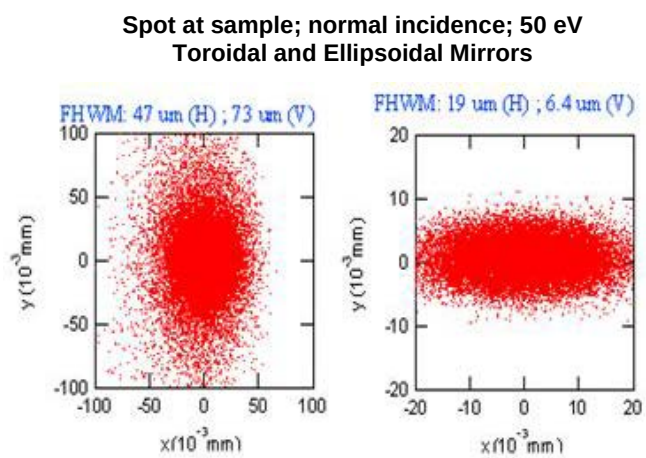

Figure 4. ESM beamline: calculated spot size at the XPEEM sample position. The photon energy is 50 eV. Left panel: refocusing obtained with a toroidal mirror; right panel: refocusing obtained with an ellipsoidal mirror.

SIX – SOFT INELASTIC X-RAY

A solution to increase the throughput of the SIX spectrometer without increasing the length of the optics (and therefore their cost) has been found. It involves reducing the distance between the sample position and the parabolic mirrors that horizontally collect the scattered beam. Because this necessitates bringing the mirrors inside the sample chamber, the chamber design had to be modified accordingly. The new chamber design is larger, and its support and the rail of the sliding window have also been redesigned to be sturdier (Fig. 3, cover). Dialogue with manufacturers of custom-built cryo-cooled sample manipulators has begun, and the technical specifications for the SIX sample manipulator are in the process of being refined through these interactions.

ISS – INNER SHELL SPECTROSCOPY

Poly-capillary lens systems play a dominating role in the optics and detector design of ISS. Their large angle acceptance and high tolerance to beam motions make them perfect optical elements to micro-focus a wiggler beam and also enable the collection of a large solid angle of the emitted x-ray fluorescence. However, their short working distance of only 3 to 8 mm complicates the integration of these elements into sample environments with wide temperature ranges. None of the commercially available lens systems is compatible with these space and temperature requirements.

To optimize the system integration, design effort of the lens packaging has begun and first prototypes have been produced. Figure 5 demonstrates the concept: the capillary lens is held by a spring-like plastic part, which pushes against two graphite counter bearings glued to the poly-capillary lens. This mechanism ensures that the lens cannot be bent along the longitudinal axis; additionally, this design guarantees a straight lens even if the outer shell is strained or bent. The cone is made of Kovar, a material that can be easily fritted to glass, and will be equipped with a Be x-ray window. The full structure will be gold coated to increase its IR-reflectivity, reducing heating of the optics inside.

Additionally, the Specifications, SOWs, and drawings of the two ISS enclosures were finalized and handed over to procurement. Other important activities in January included preparations for the BAT meeting to be held Feb. 11–12, and the hiring process for the second beamline scientist.

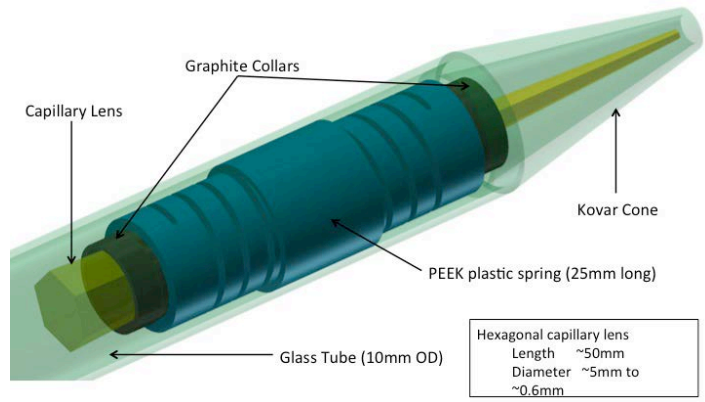

Figure 5. Model of the new poly-capillary lens holder. The design is optimized to withstand extreme temperatures between 4K and 1100K. Also,, this design will allow high packing density in the solid angle range surrounding the sample.

SMI – SOFT MATTER INTERFACE

Design of the fixed mask in the SMI FOE, to protect the white beam elements from misalignment or failure of the slits in the front end, has been developed (Fig. 1, cover). This design incorporates engineering and design knowledge from the Front End group, including stock material sizes and plumbing tolerances, and is ready for FEA heat load studies. A power density diagram representing the full power of two simultaneously operating beams has been generated (Fig. 6, below). The data are computed from two identical IVU23 undulators operating at closed gap (K=2.05), a value that is expected to be used for many applications. This is a worst-case scenario: the future additional undulator for SMI will be a shorter device, <1.5 m instead of 2.8 m in length. Also, the second source will not be optimized for the lower x-ray energies that require such a high K value.

Following FEA analysis, the fixed mask design may be revised before final specifications are written for the white beam elements, which include FOE slits as well as the monochromator.

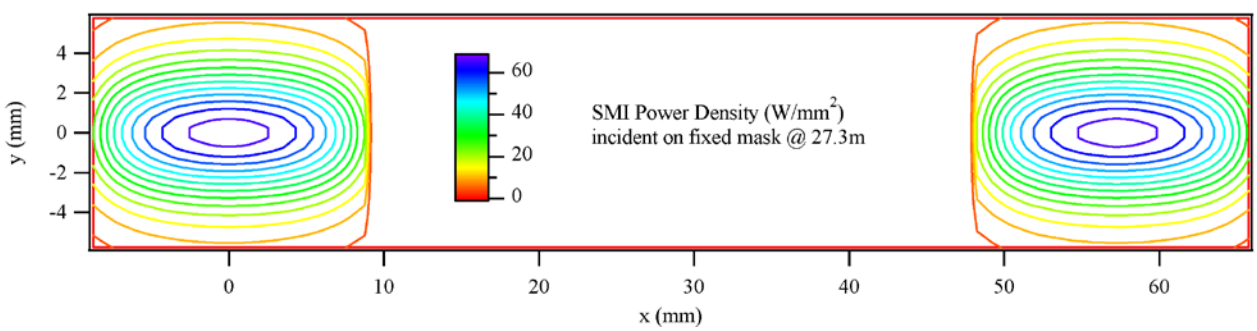

Figure 6. Contour plots of the power density emanating from two canted (2 mrad) IVU23 undulators operating at full power (K=2.05).

UPCOMING EVENTS

ISS BAT Meeting	Feb 11–12
ESM BAT Meeting	Feb 19-20
ALD's NEXT PDR Review	Mar 6–7
BNL Director's Review of NSLS-II Beamline Projects	Apr 4–5
DOE Review of NEXT Project	TBD

PROJECT MILESTONES

Milestone	Planned	Actual
CD-0 (Mission Need):	3Q10	May 27, 2010
CD-1 (Alternative Selection):	4Q11	Dec. 19, 2011
CD-3A (Long Lead Procurement):	3Q13	
CD-2 (Performance Baseline):	3Q13	
CD-3 (Start Construction):	1Q14	
Early Project Completion:	4Q16	
CD-4 (Project Completion):	4Q17	

Acronyms

BAT Beamline Advisory Team

ESM Electron Spectro-Microscopy beamline

FEA Finite Element Analysis

FOE First Optics Enclosure

FXI Full-field X-ray Imaging beamline

ISR Integrated In-Situ and Resonant X-ray Studies

ISS Inner Shell Spectroscopy beamline

IVU In-Vacuum Undulator

LDRD Laboratory Directed Research & Development

PS Photon Sciences (Division)

SIX Soft Inelastic X-ray Scattering

SMI Soft Matter Interfaces beamline

SOW Statement of Work

TXM Transmission X-ray Microscopy

PROJECT SCHEDULE

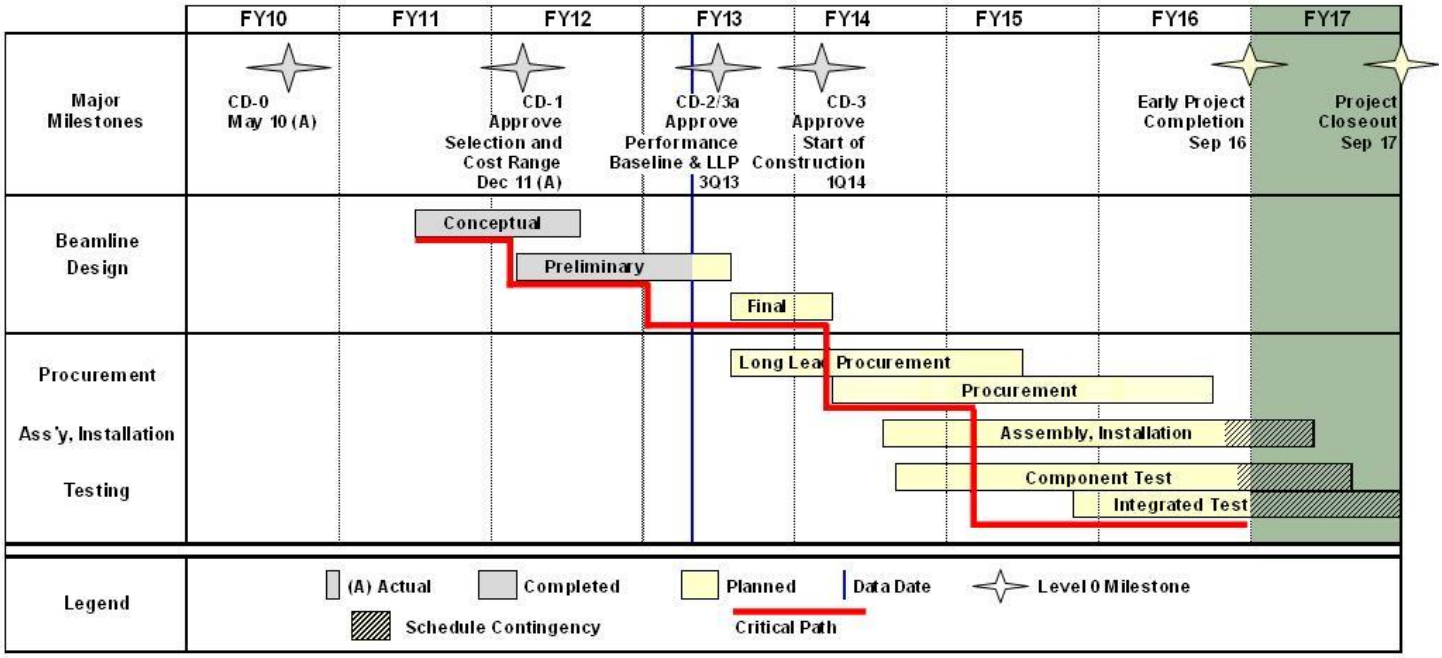

Funding Profile

Funding Type	NEXT Funding Profile ($M)						
	FY11	FY12	FY13	FY14	FY15	FY16	TOTAL
OPC	3.0						3.0
TEC		12.0	12.0	25.9	21.6	15.5	87.0
Total Project Cost	3.0	12.0	12.0	25.9	21.6	15.5	90.0

Cost and Staffing Report

As of 1/31/2013	Current Period		Cumulative-to-Date	
	Cost	Staffing (FTE-yr)	Cost	Staffing (FTE-yr)
WBS 2.01	$65,471	0.27	$1,590,734	5.93
WBS 2.02	$0	0.00	$1,807,316	8.74
WBS 2.03	$8,194	0.03	$31,286	0.10 *
WBS 2.04	$11,382	0.06	$86,631	0.43
WBS 2.05	$21,735	0.11	$146,119	0.74
WBS 2.06	$31,743	0.16	$180,703	0.88
WBS 2.07	$25,365	0.14	$153,390	0.81
WBS 2.08	$25,807	0.11	$209,245	0.83
WBS 2.09	$42,089	0.24	$290,304	1.67
WBS 2.10	$22,762	0.14	$138,114	0.83
Total	$254,548	1.26	$4,633,842	20.96

* Common Beamline Systems management effort was charged to WBS 2.01 for all of FY11 and FY12.

Key NEXT Personnel

Title	Name	Email	Phone
Federal Project Director	Robert Caradonna	rcaradonna@bnl.gov	631-344-2945
NEXT Project Manager	Steve Hulbert	hulbert@bnl.gov	631-344-7570