NSLS-II Experimental Tools (NEXT)

February 2013 Project Activity

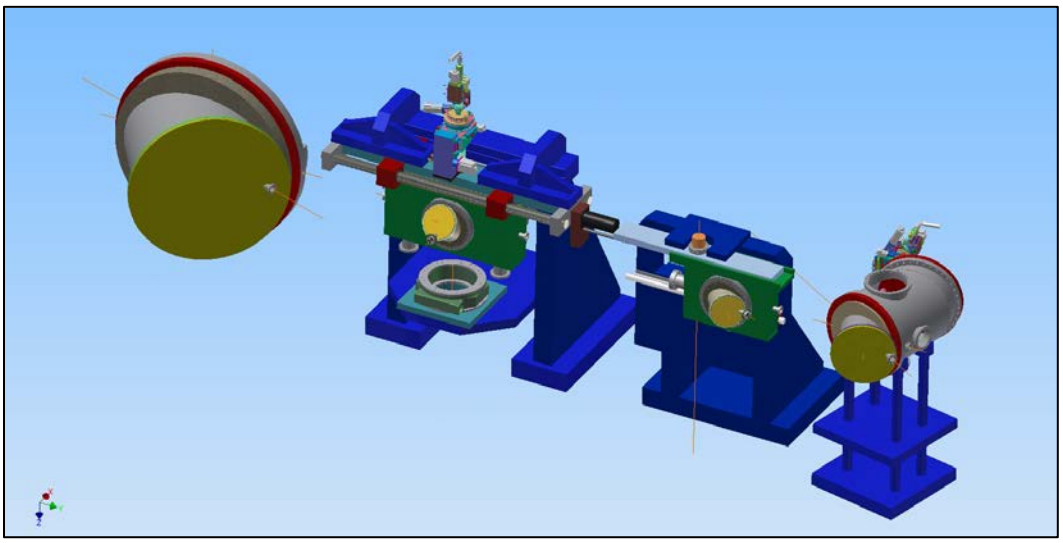

Figure 1. Conceptual designs currently considered for the SIX sample chamber, with (center left and center right) and without (far left and far right) sliding window. The chamber in the center-left design is bigger than in the center-right design because it contains the parabolic mirrors and their holders. The difference in size between the far-right and far-left designs is driven by the mounting direction of the sample manipulator/cryostat: horizontally for far right and vertically for far left.

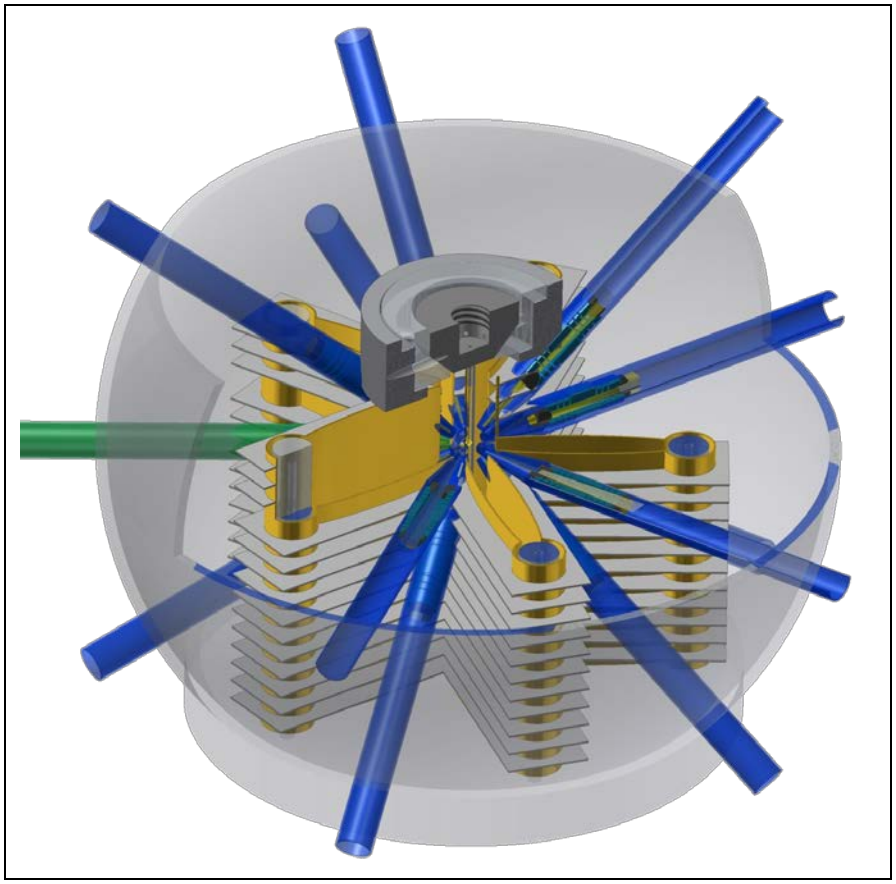

Figure 2: Model of the ISS sample environment with integrated x-ray focusing lens system (green) and 14 pre-collimation optics systems to extract x-ray fluorescence (blue). The sample reactor is centered in the cryo-chamber (shown in cut-away view), which is filled with helium exchange gas. The sample reactor can be fed with five different gases via a central capillary. The sample temperature can be adjusted between 4K and 1100°C. Physical exchange of sample reactors will be fully automated.

Upton NY 11973

OVERALL ASSESSMENT

During February, final preparations were completed for the March 6–7 ALD's Preliminary Design Review of the NEXT Project, and all documents and presentations for this review were posted. The review committee has been asked to evaluate the readiness of the NEXT project to be baselined, specifically for scope, cost, schedule, and management. The committee is also charged with evaluating the appropriateness and technical readiness of the proposed long-lead procurement items.

NEXT Project staff continued to make excellent progress on preliminary design of their photon delivery systems and endstations, as evidenced by the technical content of this and recent monthly reports. Two beamlines held BAT meetings in February: ISS (Feb. 11–12) and ESM (Feb. 20–21). Interviews for beamline scientist positions for ESM, ISR, ISS, and SMI are in full swing; offers to selected candidates for these positions are expected to be extended starting next month.

Specifications, SOWs, and layout drawings for the lead-shielded enclosures for all beamlines have been handed off to procurement. These include the first optics enclosures (FOEs) for each beamline and the endstation enclosures for the damping wiggler beamlines (ISS and FXI).

Preparation of specifications and SOWs for the photon delivery systems continued, concentrating on those that are proposed for long-lead procurement to be awarded in calendar year 2013. These include high-heat-load optical components (first mirrors or monochromators of hard x-ray beamlines), gratings and monochromators for soft x-ray beamlines, and EPUs for ESM and SIX, all of which are expected to have long procurement delivery times.

FXI – FULL-FIELD X-RAY IMAGING

The team continues to refine the layout of the FOE, using revised ray tracings and additional information pertaining to safety requirements. One area of work is the pink beam stop and mask. Because the first mirror angle can be changed, the reflected (pink) beam, which has considerable power (~900 W), can move over significant distances. The challenge is to safely stop/mask the pink beam with a reasonably sized cooled copper stop. The current plan is to use hard mechanical stops to limit the range of angular motion in the mirror, in combination with a pink beam mask and a pink beam stop. Based on earlier FEA results and recent ray tracings, the best placement of the mask and an associated pink beam slit seems to be before the monochromator. The pink beam stop will be placed after the monochromator.

ISR – IN-SITU AND RESONANT HARD X-RAY

A design for a fixed mask was completed (Fig. 3). Such a mask will be located in the FOE, just upstream of the bremsstrahlung collimator, and will also serve as a differential pump. The mask is designed to accommodate both beams from canted insertion devices, although only the outboard beam will be present in the initial phase of the beamline. The proposed cooling scheme for the mask awaits the results of FEA calculations in order to validate its required performance.

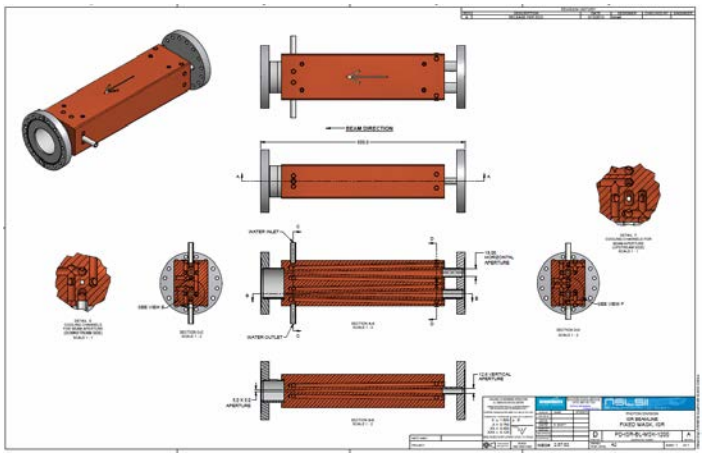

Figure 3: Design of a fixed mask for canted insertion devices, with downstream aperture sizes of 5 mm x 5 mm. Section views on the left and right show the downstream and upstream apertures, respectively, as well as the locations of lines for cooling water. Note that cooling water traverses the length of the device eight times.

ESM – ELECTRON SPECTRO-MICROSCOPY

The first ESM Beamline Advisory Team (BAT) meeting was held February 19–20, 2013. As part of this meeting, an in-depth review of the ESM optical design was conducted by the BAT. Formal presentations on the beamline insertion device, optics, and engineering design solutions were given by Oleg Chubar, Joseph Dvorak, and Yi Zhu, respectively. Additionally, Mourad Idir presented the metrology capabilities that he and his group are setting up in the NSLS-II metrology laboratory. In the closing session, the BAT provided recommendations aimed at optimizing the beamline parameters to best serve the photoemission user community. Advice provided by the BAT at this meeting is extremely useful for finalizing the parameters and design of the ESM photon delivery system. It was decided that a major subject of discussion at the next BAT meeting will be endstation capabilities. A photo of the BAT appears below.

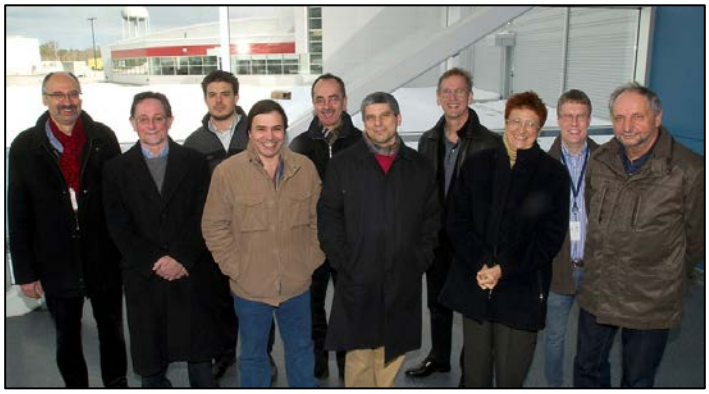

Figure 4. ESM BAT: from left to right,: F. Polack (Soleil), P.D. Johnson (BNL, BAT Chair), A. Caruso (UMKC), J. Rodriguez (BNL), R. Follath (SLS), E. Vescovo (ESM Group Leader, BNL), R. Tromp (IBM), M. Kiskinova (ELETTRA), J. Sadowski (BNL), T. Tyliszczak (ALS)

SIX – SOFT INELASTIC X-RAY

Design refinement of the sample chamber has continued in order to assess the possibility of achieving an angular range of rotation of the spectrometer arm as large as 130° (2θ=25-155°) without using a sliding window, as a way to mitigate technical risks associated with the use and maintenance of the window. Two such viable designs are now under consideration; one design uses a horizontally mounted sample manipulator/cryostat and a rotating flange of 20″ diameter (far right in Fig. 1, cover), the other design uses a vertically mounted manipulator/cryostat and a rotating flange of 57″ diameter (far left, Fig. 1). Discussions regarding the maximum feasible diameter for the rotating flange are underway with a supplier of graphite-impregnated Teflon seals.

Calculations of the heat load on the first two mirrors and the gratings have been carried out for the 3.5 m-long EPU57 insertion device. These will be provided for FEA analysis of the thermally-induced surface deformations. Note that the 57 mm period length will provide the desired minimum energies for each polarization mode: 140 eV for linear horizontal, 205 eV for circular, and 265 eV for linear vertical.

ISS – INNER SHELL SPECTROSCOPY

To overcome the detection efficiency and sample damage issues that plague typical x-ray emission spectroscopy setups, the ISS team is developing a new holistic concept built on a sample environment with fully integrated x-ray focusing and fluorescence detection capabilities. A preliminary design of the sample environment, shown in Figure 2 (cover), was developed in February. This design provides a focused x-ray spot size appropriate to emission spectrometers (roughly 25–40 μm diameter), a large solid angle for fluorescence collection of 20–25%, and a wide variety of sample environment conditions. The system will be optimized to vary the sample temperature from 4K to 1100K with a fast (<10 s) response time. The sample cell itself is based on a sample capillary allowing catalysis experiments with gaseous fuels and reactants as well as liquid and frozen materials. A fast connection mechanism will allow changing the samples, fully automatically, within seconds.

At the second Beamline Advisory Team meeting, held February 11–12, the current status of the photon delivery system and endstation designs were presented. Specifically, the specification and SOW documents for the high-heat-load monochromator were reviewed. Individual members of the BAT agreed to participate in development and testing of the sample environment prototype within the next 6 months. This effort will include tests of the catalysis reactor, the sample heating/cooling system, and the sample changer.

In the area of polycapillary lens development, the ISS team and industrial partners were able to develop important metrology to characterize the external shape of the drawn polycapillary bundles. The ISS team is developing theoretical modeling of the expected collection efficiency of polycapillary lenses using the measured envelope of the bundles.

COMMON SYSTEMS

The Common Systems for the NEXT Beamlines are comprised of Electrical and Mechanical Utilities, Personnel Protection Systems (PPS), Equipment Protection Systems (EPS), and Control Stations. A significant portion of design and specification work for these systems has already been completed for the NSLS-II Project beamlines. Final designs and specifications of NEXT common beamline systems will be completed after the contracts for the shielded enclosures are awarded. Components for the utilities system are planned to be purchased in large quantities, with associated cost benefits, by combining procurements from ABBIX, NSLS-II, and NEXT projects. Conceptual designs and budget estimates for the Control Stations have been prepared.

CONTROLS

The beamline controls group has succeeded in generating programmable trigger pulses from the standard Delta-Tau motion controller at predetermined motor positions. This is a critical step in implementing the "fly-scan" scanning mode, which is envisioned to be adopted by many of the NEXT beamlines. A test stand has been set up to trigger a Struck 3820 scaler with pulses from the Delta-Tau motion controller during fly-scans. An electronic problem related to the trigger pulse level was discovered and beamline controls staff are working with electrical engineers to work out a solution.

ELLIPTICALLY POLARIZING UNDULATORS

Two APPLE-II type EPUs are required as the photon sources for the ESM and SIX beamlines. ESM requires a 3.5 m long EPU with 105 mm period length (EPU105), while SIX requires a 3.5 m long EPU with 57 mm period length (EPU57). The SIX requirements include design consideration for future addition of a second 3.5 m-long EPU57 device in such a way as to create one 7.0 m-long EPU57.

Extensive studies have been conducted to ensure that usage of these long EPUs in long insertion device straight sections of the NSLS-II lattice will not create detrimental effects during ring operation.

SMI – SOFT MATTER INTERFACE

Layout of the SMI beamline vacuum system has been completed, including quantitative analysis by the Vacuum Group. The analysis includes realistic modeling of the sources, sinks, and impedances that will be present in the beamline. Figure 5 (p. 4) shows a graph of simulated pressure along the beamline, plotted vs. distance from the FOE gate valve, for vacuum layouts incorporating a varying number (from 8 to 11) of 300 l/s ion pumps. The caption identifies the pump locations and all potential outgassing elements such as slits and masks. The analysis results indicate that the pressure should be better than 10^{-8} Torr, and as good as 10^{-9} Torr, throughout the First Optics Enclosure and up to the Secondary Source Aperture. Different possible vacuum pumping options for the experimental enclosures are indicated, ranging from

the low 10^{-7} Torr range (good for ease of sample and configuration changes) to the upper 10^{-9} Torr range if additional ion pumps are utilized. SMI is now prepared to move forward with all necessary vacuum specifications completed for the Photon Delivery System procurements. The GI-SAXS endstation pumping configuration will be chosen during final design of this endstation, in the coming year.

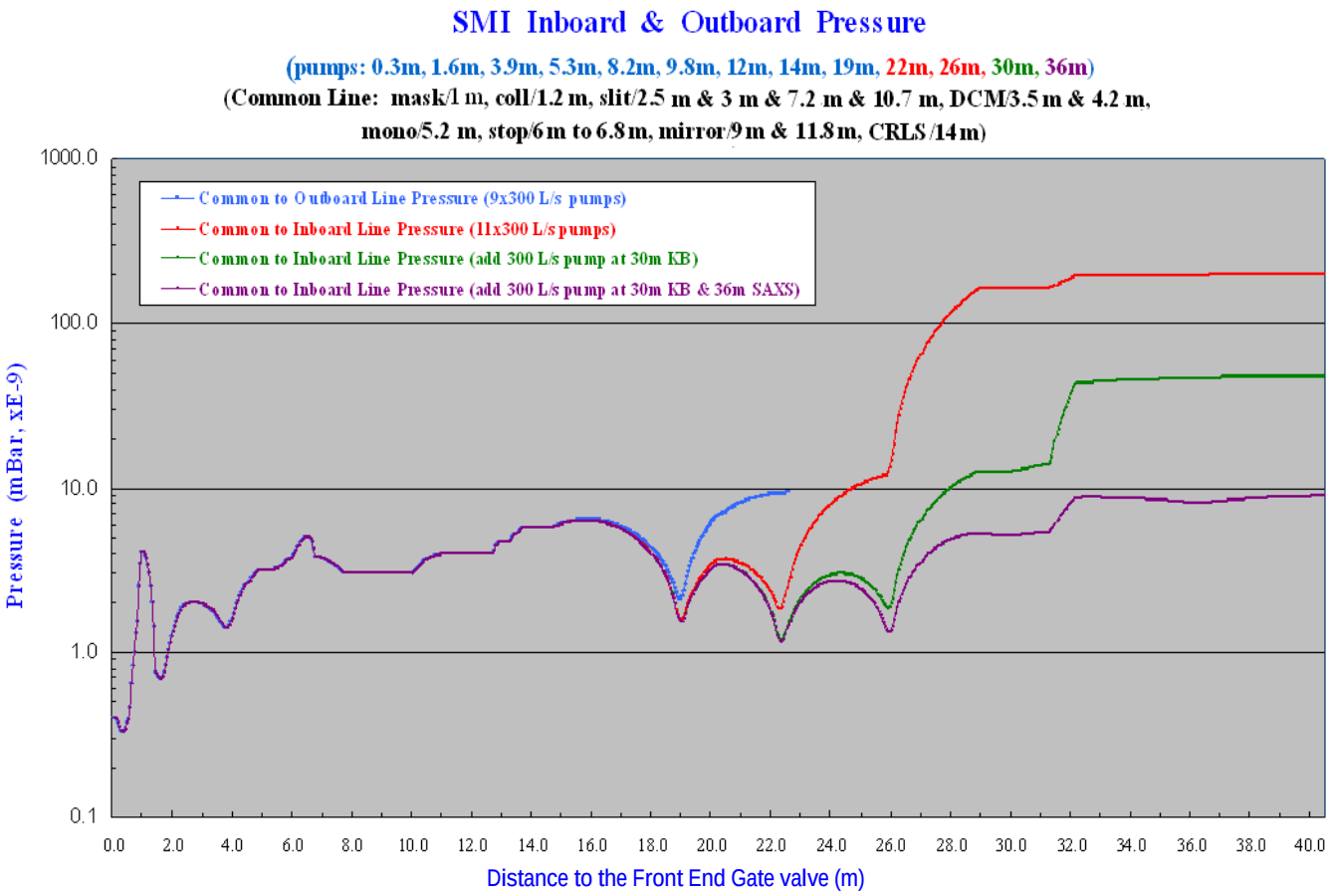

Figure 5. Results of vacuum analysis for the SMI beamline from Eugene Hu (Vacuum Group): expected pressure for the SMI beamline model vs. distance along the flight path. Blue line: pressure in "outboard line" terminating in a beryllium window after the SSA, also accurately models the Liquids Experiment configuration in the baseline scope. Red line: rough vacuum conditions in the GI-SAXS hutch. Green and purple lines: additional pumps for UHV in the GI-SAXS hutch. Pressure units: 1 mbar = 0.75 Torr.

UPCOMING EVENTS

ALD's NEXT PDR Review	Mar. 6–7
BNL Director's Review - NSLS-II Beamline Projects	Apr. 4–5
DOE Review of NEXT Project	Jul 30–Aug 1

PROJECT MILESTONES

Milestone	Planned	Actual
CD-0 (Mission Need):	3Q10	May 27, 2010
CD-1 (Alternative Selection):	4Q11	Dec. 19, 2011
CD-2 (Performance Baseline):	4Q13	
CD-3A (Long Lead Procurement):	4Q13	
CD-3 (Start Construction):	1Q14	
Early Project Completion:	4Q16	
CD-4 (Project Completion):	4Q17	

Acronyms

BAT	Beamline Advisory Team
ESM	Electron Spectro-Microscopy beamline
FEA	Finite Element Analysis
FOE	First Optics Enclosure
FXI	Full-field X-ray Imaging beamline
ISR	Integrated In-Situ and Resonant X-ray Studies
ISS	Inner Shell Spectroscopy beamline
IVU	In-Vacuum Undulator
LDRD	Laboratory Directed Research & Development
PS	Photon Sciences (Division)
SIX	Soft Inelastic X-ray Scattering
SMI	Soft Matter Interfaces beamline
SOW	Statement of Work
TXM	Transmission X-ray Microscopy

PROJECT SCHEDULE

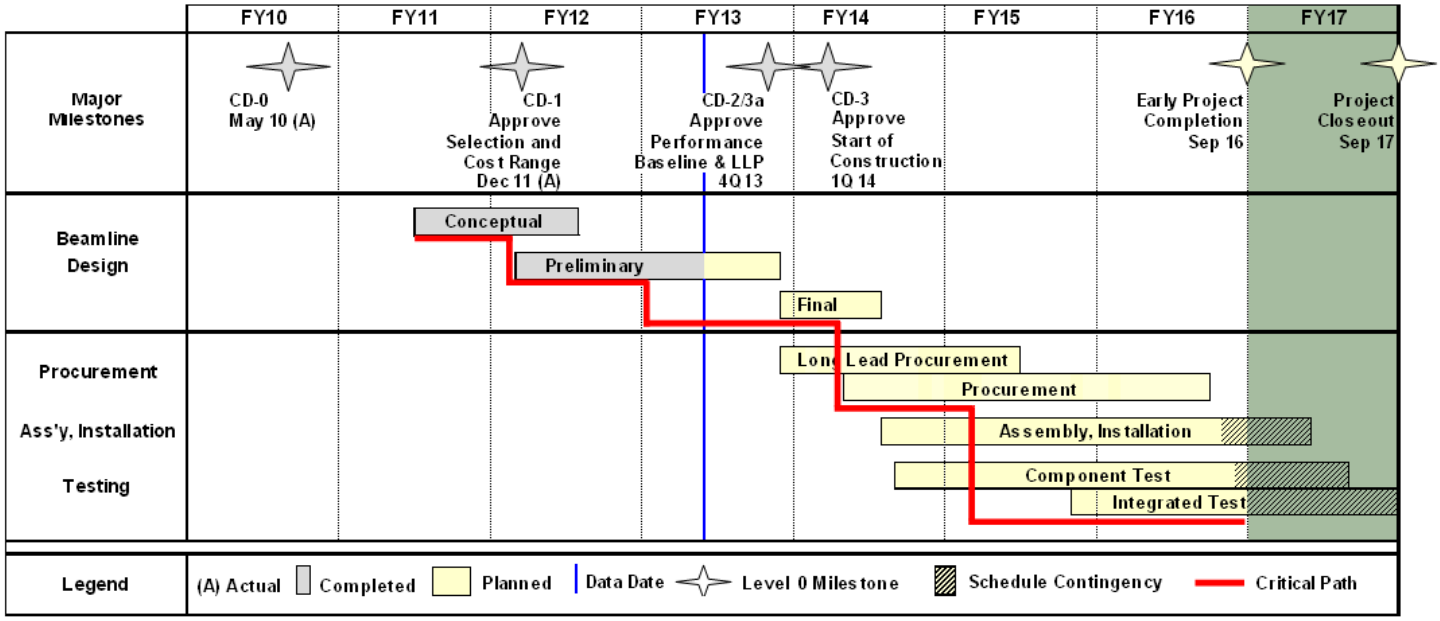

Funding Profile

Funding Type	NEXT Funding Profile ($M)						
	FY11	FY12	FY13	FY14	FY15	FY16	TOTAL
OPC	3.0						3.0
TEC -- Design		3.0	2.0				5.0
TEC -- Fabrication		9.0	10.0	25.9	21.6	15.5	82.0
Total Project Cost	3.0	12.0	12.0	25.9	21.6	15.5	90.0

Cost and Staffing Report

As of 2/28/2013	Current Period		Cumulative-to-Date	
	Cost	Staffing (FTE-yr)	Cost	Staffing (FTE-yr)
WBS 2.01	$112,096	0.44	$1,702,830	6.37
WBS 2.02	$0	0.00	$1,807,316	8.74
WBS 2.03	$11,074	0.05	$42,360	0.15 *
WBS 2.04	$14,622	0.08	$101,253	0.51
WBS 2.05	$53,229	0.25	$199,348	0.99
WBS 2.06	$30,564	0.16	$211,267	1.04
WBS 2.07	$33,996	0.18	$187,386	0.99
WBS 2.08	$44,705	0.18	$253,950	1.01
WBS 2.09	$56,573	0.32	$346,877	1.99
WBS 2.10	$39,533	0.18	$177,647	1.02
Total	$396,392	1.85	$5,030,234	22.81

* Common Beamline Systems management effort was charged to WBS 2.01 for all of FY11 and FY12.

Key NEXT Personnel

Title	Name	Email	Phone
Federal Project Director	Robert Caradonna	rcaradonna@bnl.gov	631-344-2945
NEXT Project Manager	Steve Hulbert	hulbert@bnl.gov	631-344-7570