# National Synchrotron Light Source II

# Project Progress Report

## October 2012

A new ribbon of sidewalk winds through the greening lawn. Most exterior work is done.

report due date:
November 20, 2012

**Steve Dierker**
NSLS-II Project Director

**Brookhaven National Laboratory**
Upton, New York 11973

## OVERALL ASSESSMENT

Despite the impact by super-storm Sandy, the National Synchrotron Light Source II Project maintained satisfactory cost and schedule performance. At the end of October, the Project was 83% complete with 42.1% of contingency and management reserve for the remaining Estimate at Completion (EAC). The cumulative cost and schedule indices for the overall project were 0.99 and 0.95.

Conventional construction is on budget and on schedule as activities continue to wind down. The first three Lab-Office Buildings and HXN satellite building were substantially completed and beneficial occupancy was received in October.

Schedule performance for accelerator systems continued to show improvement, with a monthly schedule performance index of 1.10 (+$397K) in October. The booster magnet-girder installation was completed and the RF transmitter became fully operational. Supplemental shielding for the linac, booster, and transfer lines has been re-evaluated and any necessary enhancements are being made to ensure that any potential safety risks are appropriately addressed. A total of 114 of 150 storage ring magnet girders have been installed, and delivery and installation of power supplies, vacuum, diagnostics, RF, and cryogenic systems continued. A first damping wiggler unit was successfully delivered and the production of superconducting RF cavity continued to make good progress by overcoming some technical challenges.

The accelerator physics group continued its effort on development of plans and integrated software for various phases of commissioning, including storage ring standalone commissioning, followed by insertion device commissioning and beamline commissioning with visible and x-ray beams.

Hutch installation and procurement activities continued for experimental facilities. A number of design reviews for major beamline component contracts were conducted. At the Science Readiness Review held Oct. 25–26, detailed plans for installation and commissioning as well as an overall strategy for the early science program at each beamline were presented. Continuing delays in procurements for beamline components and hutch installation resulted in a negative monthly schedule variance of 0.80 (-$489K) for the experimental facilities in October.

The early completion date for the overall project continues to be June 2014, maintaining 12 months of schedule float (38% schedule contingency) with respect to the Project's CD-4 milestone date. The schedule refinement for accelerator and beamline installation and the annual project-wide comprehensive EAC review continued. ARRA-funded activities are now nearly 100% complete, on schedule and on budget.

### UPCOMING EVENTS

| | |
|---|---|
| SRX KB Mirror PDR | Nov 5 |
| IXS Bruker PDR | Nov 13 |
| IXS WinlightX PDR | Nov 15–16 |
| CSX PDR for M1A and M3B Mechanics from VMB-Oxford | Nov 19 |
| NSLS-II Mini-Review of NSLS-II Project | Dec 10 |

## ACCELERATOR SYSTEMS

**Booster, transfer lines, and injection straight.** The magnet girder installation in the booster is complete. Cable tray installation and cable pulling have been completed except for some smaller instrumentation cable. The vacuum system for all four arcs is complete as well, and vacuum has been successfully leak tested.

The injection and extraction pulsed magnets were installed and their power supply (PS) installation is complete. The large booster PS has been delivered. Two of the three PS are ready for operation; the third needs more testing and set-up. Transfer Line (TL) table tops have arrived. All magnets required for booster commissioning have been received and magnetic measurements are almost complete. The detailed design of the storage ring (SR) injection straight is complete, and manufacturing of the transition chambers is underway. The SR kicker pulser was tested successfully with the timing system—including a novel reverse diode. A position for an additional staff skilled in radiological calculations has been opened to provide additional support for the design of supplemental shielding for the booster and TL.

Figure 1. Booster-to-storage ring Transfer Line stands.

A "stay clear" zone for the septa shields was established at booster ring locations. A procedure will facilitate temporarily removing shielding that obstructs accelerator hardware, when access is required. The group also designed collar brick shields and support frames for penetrations in the linac downstream wall, and D models of four additional shields for the LtB (linac-to-booster) Transfer Line Phase 1.

**Controls**. Full production of the 40-cell controller printed circuit boards has been started after successful testing of the first articles. The corresponding chassis have been received and tested. Storage ring installation work for controls was performed in pentants 2 and 3. All equipment for P3 has been configured. Network communications have been established in all electronics racks of P2, and cables are being terminated in P3. Injector controls equipment installation is 80% complete. All booster subsystems required for the booster magnet, power supply, and vacuum system have been

installed and tested. Controls for the booster low-level RF (LLRF) are approximately 70% complete. Controls for the booster ramp waveforms and operator screens for the LLRF have been added. Network fiber optic cables have been pulled for P1, P2, P3, and P5 in one direction (final built-out has two counter-rotating network rings for redundancy). P2 and P3 network fibers cables are now terminated and operational. Controls for the water systems in Service Bldg. 1 have been completed. The implementation of the cell controller architecture has been tested, including the deterministic data link and functionality of the fast orbit feedback and machine protection system.

**Mechanical utilities.** In P1, the pressure test of cooling water circuits on the magnets was completed and leaks have been fixed. All copper header connections to magnets have been completed. The P1 de-ionized (DI) copper system is currently being started up in the morning and shut down at the end of the day in support of magnet testing. In P2, the primary focus is on the DI header drops to the magnets. The drawings for the cooling water piping in the block are complete. Material has been ordered for the block-house piping installation. The installation status of the pump skid systems is as follows: SB-2, 75% complete; SB-3, 40% complete; SB-4, 5% complete, SB-5, also 5% complete.

**Vacuum**. Two dipole girder vacuum integration workplaces in Bldg. 905 are fully operational for chamber assembly and bake out. In the SR, cells 06 and 09 were assembled, baked, and reached ultra-high vacuum pressure of $10^{-11}$ Torr. Cell 05 is being assembled together with photon beam exit port components. The water cooling manifolds for the vacuum chamber and the absorber system have been installed in P1; installation has begun in P2. The four arc sections in the booster are under vacuum, as are the injection and extraction sections. All booster-to-storage ring (BtS) TL vacuum chambers are completed and being cleaned. The production of absorbers continues as planned. The orders for all vacuum instruments and pump controllers are completed. All cables for injector racks and in-booster arcs were terminated. The vacuum input-output controller (IOC) and Ethernet are up and running at the injector and at P1 and P2. Fifteen storage ring PLCs were received, tested, and installed in SR racks. The termination of cables in P4 has started.

**Electrical engineering**. Regulators needed for P1, the TLs, and cells 29 and 30 in P2 all have been configured and tested. The PS interface testing and configuration has been com–pleted for all of P1, TLs, booster pulse power systems, and cells 29 and 30 in P2. Ninety percent of the dipole corrector power production units have been received. Ninety-eight units have been tested and installed in P1. Engineering has finished work on the design of the fast corrector PS. Temperature monitoring equipment for the racks has been delivered. PS installation has progressed in P2 and will be completed by mid-December. The installation of electronic racks on the mezzanine is completed.

**RF.** High-power testing of the booster cavity (Fig. 2) was successful to 1.4 MV, more than 15% above the 1.2 MV requirement. The booster transmitter is operational. The production digital controller for the booster is complete and has been booster-ramping tested on the bench. The controller is fully operational.

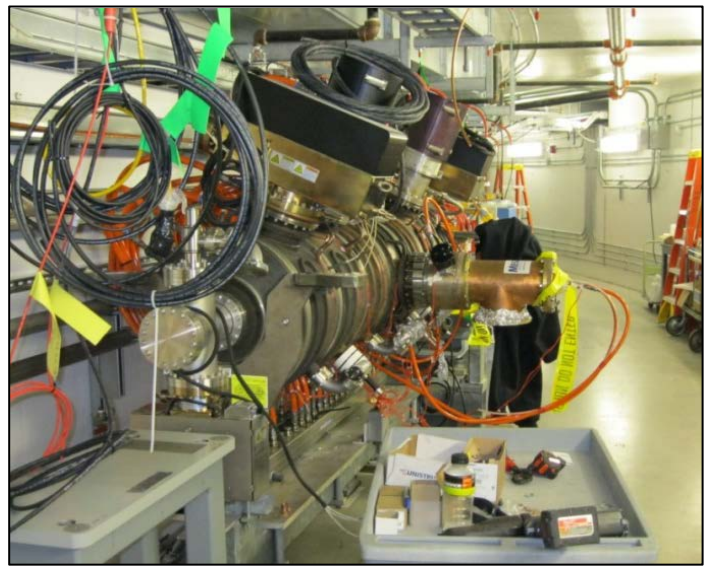

Figure 2. Booster RF cavity.

A problem with reflected power in the storage ring was investigated and eliminated. Production of the 500 MHz superconducting cavity will be delayed by 1 month due to electroplating difficulties and some issues with the cryostat production. Meanwhile, there is steady progress in production of the niobium cavity, which is the pacing item in the contract. The vertical cold test of the niobium cavities is still scheduled for early 2013 at CAD. The BNL ESH cryo subcommittee review of the Landau cavity cold test is scheduled for Nov. 8. The design of the superconducting cavity quench protection circuit has begun and the choice of the pressure sensor is complete, pending review. The cryo-genic system production is nearly complete except for piping: staffing issues at Linde subcontractor PHPK have delayed the piping design. The production of valve boxes, Dewars, and the LN2 system is on track and scheduled to finish before January. Vacuum-jacketed piping will be delivered in late February. The installation of the cryogenic system will start in the second week of January, followed by system commis-sioning in mid March. The RF group is currently program-ming the valve box PLC. The LN2 system had a successful Final Design Review and is now in full production. The Phase separator is due to be delivered in late December, consistent with the overall installation schedule for the RF mezzanine, which is the one place where the LHe and LN2 systems intertwine. The order for the clean room has been placed with the vendor. Preliminary design drawings are in draft and will be reviewed in November.

**Insertion devices.** The first of six damping wigglers was delivered at BNL. Production and delivery of the remaining five damping wigglers will follow over next 5 months. A number of small technical issues with production of the elliptically polarizing undulator (EPU) required attention and caused a slight delay in completing the first unit. The preliminary design review (PDR) was completed for the EPU vacuum chamber. The Integrated Field Measurement System

has become operable and produces results consistent with those of a Hall probe. The factory acceptance testing for the in-vacuum measurement system was successful. Two proposals for the SS canting magnets were received, evaluated, and scored by the technical review committee, and both were accepted.

**Girder integration/installation.** Magnet production is complete, with the final five of 843 SR magnets shipped and scheduled to arrive by mid November. Seventy-seven of the 90 multipole magnet/girders and 37 of 60 dipole girders have been installed in the SR. All multipole girders in P1 have been hydrostatically tested, leaks repaired, and the girders retested. Braided feed lines are being installed. The last girder for P2 is assembled and being vacuum checked and is scheduled for delivery Nov. 5. The design for the fast corrector mounting frame has been released; it is on order at BNL Central Shops.

**Front ends.** Photon shutter bodies have been brazed and received. All ratchet wall collimators are out for bid. Safety shutter components are being received and production is 65% complete. Front end electrical drawings and a tracking spreadsheet have been generated and are being checked.

**Instrumentation**. The final layout drawing for the transverse feedback and tune monitor in cell 16 is in progress and will be submitted for release in the next few weeks. An order was submitted to BNL Central Shops for the remaining tapered chambers (plus one spare). The high-stability BPM stand and chambers are complete for cells 3, 10, 11, and 16. The invar for the BHS stands has been received and final machining is in progress. The procurement of all synchrotron light monitor (SLM) components is complete, with approximately 30% of the components received. All remaining assembly drawings are done. The SR flag design is complete; detailed drawings have been prepared and are in the release process. The brazed chamber design has been modified to mate with the new Danfysik septum chamber. Two vendor drawings for the YAG screen and custom bellows have been completed and quotes were received for both items. Two YAG screens have been requisitioned. A preliminary design for the SR scrapers horizontal actuator is complete.

**Accelerator physics.** Greg Portman of LBL visited for three days to help implement the MatLab middle layer high-level application programs. While the strategy for developing the high-level programs for NSLS-II accelerator systems is predominantly based on the python environment, implementation of the MatLab middle layer will make available programs for commissioning and machine studies which are well-developed and tested at many labs around the world. Significant progress has been made toward implementation of the MatLab middle layer, and further work will assure its usefulness in early commissioning activities.

An integrated software environment is being developed for insertion device (ID) commissioning, providing a database for ID information and python-based programs for commissioning activities, based on code Oleg Chubar wrote for Soleil.

Arrangements are being made with the ESH group to ensure that safety reviews are scheduled to support operation of the visible light diagnostic beamline at the very beginning of SR commissioning and the x-ray beamline very early in commissioning. Calculations are underway to determine the initial operating point for the storage ring in initial commissioning without IDs.

**SR installation.** By the end of October, 114 magnet/girders (77 multipoles and 37 dipoles) had been installed in the SR tunnel. The occupancy readiness review (ORE) for the RF, BR-2, and BR-3 pump skids took place Oct. 24 and there are no pre-start items. In P1, the mechanical utility group has completed high-pressure testing of the multipole magnet/girders and the PPS interlock testing has begun. Low-current testing in cells 27 and 28 is in progress; sextupole testing will follow. The skew correctors were installed. Cable pulling, PPS system installation, and vacuum installation are ongoing in several pentants in parallel In P1. In P2, power supply installation is complete in cell 29 and is underway in cells 30, 1, and 2. PS installation is about one-third complete in the pentant. Cable tray for the injection straight was installed. In P3, flushing and hydrostatic pressure testing of the PCW tie-ins is complete.

**NSLS-II Accelerator Installation Progress**

| Achieved | Apr-12 | May-12 | Jun-12 | Jul-12 | Aug-12 | Sep-12 | Oct-12 |
|---|---|---|---|---|---|---|---|
| Mechanical Utilities | 49% | 50% | 50% | 50% | 51% | 80% | 80% |
| Electrical Utilities | 55% | 61% | 65% | 69% | 72% | 75% | 80% |
| Magnets | 43% | 50% | 62% | 65% | 68% | 73% | 78% |
| Vacuum | 8% | 10% | 13% | 14% | 15% | 21% | 30% |
| Power Supplies | 12% | 15% | 18% | 22% | 27% | 30% | 36% |
| Instrumentation | 23% | 27% | 31% | 38% | 36% | 37% | 46% |
| Frontends | 0% | 0% | 0% | 0% | 0% | 0% | 7% |
| RF | 21% | 27% | 32% | 33% | 35% | 38% | 59% |
| Inje Straight | 0% | 0% | 0% | 0% | 0% | 0% | 0% |
| LINAC+Booster | 15% | 27% | 33% | 42% | 55% | 74% | 82% |
| Total | **31%** | **36%** | **40%** | **43%** | **46%** | **54%** | **62%** |

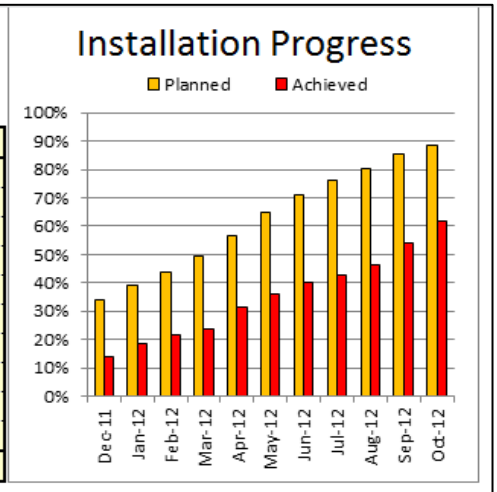


Table 1. Installation progress at the end of October 2012.

## EXPERIMENTAL FACILITIES

Hutch installation and procurement activities continued and the beneficial occupancy of HXN satellite building occurred. A number of design reviews for beamline optics contracts were conducted. The Science Readiness Review was held on October 25-26 where a detailed plan for installation and commissioning and an overall strategy for the early science program of each beamline were presented.

**CHX.** The CHX beamline advanced with several important procurements including the diffractometer contract (Huber GmbH) and the Optics Package (Bruker ASC). The CHX team has also started working on a number of early procurements for the beamline endstation. In order to install and test the equipment, a small bench test setup was procured and installed in the metrology laboratory.

**CSX.** The full polarization control branch went through discussions with the suppliers of the different optics and mechanics packages in order to be ready for the Final Design Review. The toroidal mirror package is the most complicated for this branch and required much attention. The FDR for monochromators is scheduled to be held in the third week of November.

The final vacuum test for the differential pump (Fig. 3) is currently under evaluation. Vacuum calculations are nearly finished and will enable solicitation for procurement of the beamline vacuum parts. CSX hutch acceptance tests have been performed and will continue through November, followed by the installation of utilities.

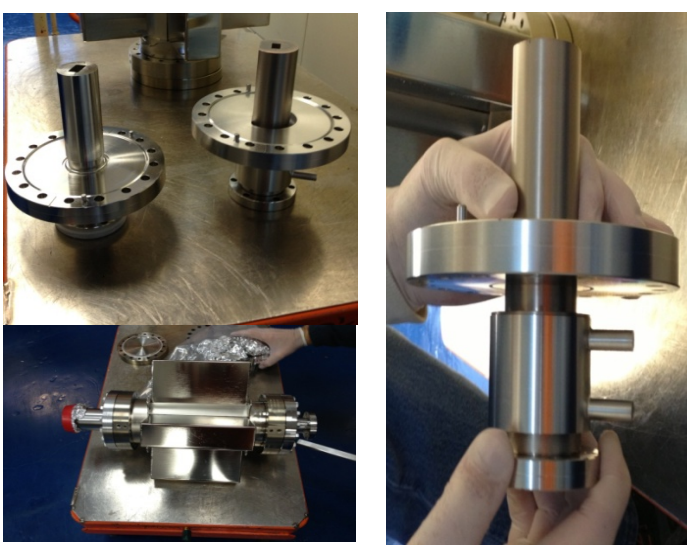

Figure 3. Elements of the differential pump assembly for the CSX-1 and CSX-2 beamline, fabricated by Gamma Vacuum.

**HXN.** The HXN team took beneficial occupancy of the HXN satellite building. The installation plan for the labyrinth was completed and the final design review for the doors was held. Installation of the cable tray on the external wall has started.

**IXS**. The IXS team tested the high-resolution crystals from Sharan, Ltd. in the first week of October at SPring-8. Sixteen crystals were tested, including eight D crystals (200 mm long; Fig. 4), two C crystals, two W crystals, and one set of 4B crystals. Apart from miscut angles in some D crystals, the 4B, W, and D crystals all performed at the required level, yielding the 1 meV total resolution. However, the thin C crystals were found to have substantial strain. As stipulated by the contract, Sharan will remake the C crystals and correct the miscut D crystals, as needed.

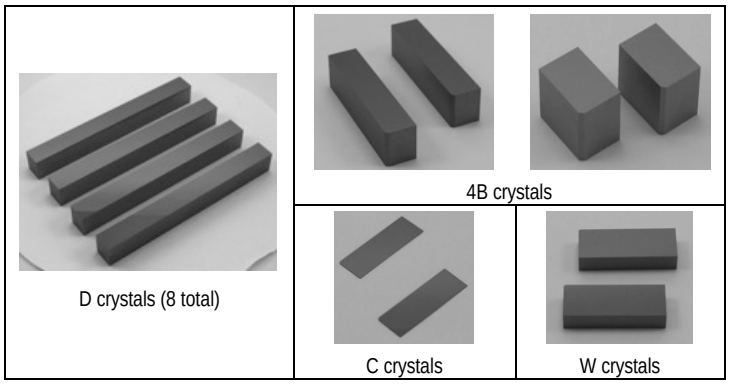


**Figure 4**. High-resolution crystals for the IXS from Sharan.

The first part of the PDR for the KB Mirror System was held at Toyama. The RFP for the IXS spectrometer received three proposals, which were evaluated. The best proposal was identified and contract negotiation is now underway, with contract award expected by the end of November.

**XPD.** Hutches A–C have been erected and additional panels for the last hutch, D, were delivered, bringing the D hutch total to 90% complete.

Figure 5. XPD polished mirror.

Final Design Review of the XPD mirror took place with WinLightX at BNL. The ion pump, gauges, and vacuum vessel have been ordered. The mirror is proceeding through the final polishing stages (Fig. 5) before Ion Beam Figuring begins.

Development of the EPICS control software commenced. FMB-Oxford's Final Design Review of XPD beamline components was approved. Purchase orders have been placed for both diamond window assembly manufacturing packs. Quotes have been invited for the high-resolution monochromator.

FMB-Oxford's Final Design Review for the XPD Laue-Laue monochromator was approved. The manufacturing pack has been completed for Part 1 of the contract. Parts, Bills of Material, and Works Orders have been set up on the Contractor's Material Requirement Planning system and quotes invited. The build will start in January 2013. The design of Part 2 is underway. The draft PDR report should be available in end November 2012.

The technical documents (Specification and Statement Of Work) forming part of the RFP for the XPD Beamline X-ray

Photon Counting Pixel Area Detector were approved and signed off on Oct. 26.

The XPD diffractometer contract kick-off meeting with RPI UK took place on site on Oct. 31 and Nov. 1–2.

**SRX.** The SRX team continues to communicate very closely with the two vendors Bruker and WinlightX, suppliers who are fabricating the SRX optics package and the SRX KB system, respectively. A visit of WinlightX staff at the BNL site supported detailed discussions of the design of the KB mirror mechanics. The conceptual designs of both the high-flux and the high-resolution KB systems have been further improved by WinlightX (Figs. 6 and 7). Nick Simos' studies continue into the potential for vibration issues from the experimental floor through the large supports for DCM and HFM and for the endstation. Procurement of the sample stages and the interferometers has begun. The hutches 5-ID-A (FOE), 5-ID-C (XFN branch), and 5-ID-D (SRX branch) have been almost completed. Several deviations from the design have been identified and will be corrected.

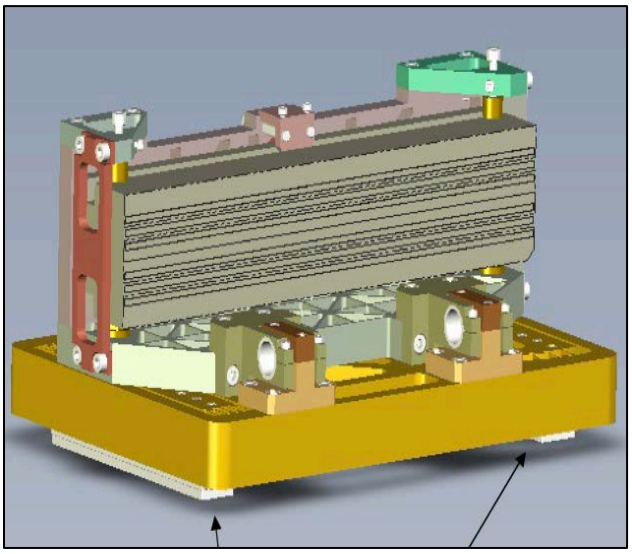

Figure 6. Flexure based mount of the horizontally focusing KB mirror of the high flux setup (conceptual design). This mirror has two different optical surfaces, for focusing or collimating operation. The stripes on each surface ensure high reflectivity across the whole energy range.

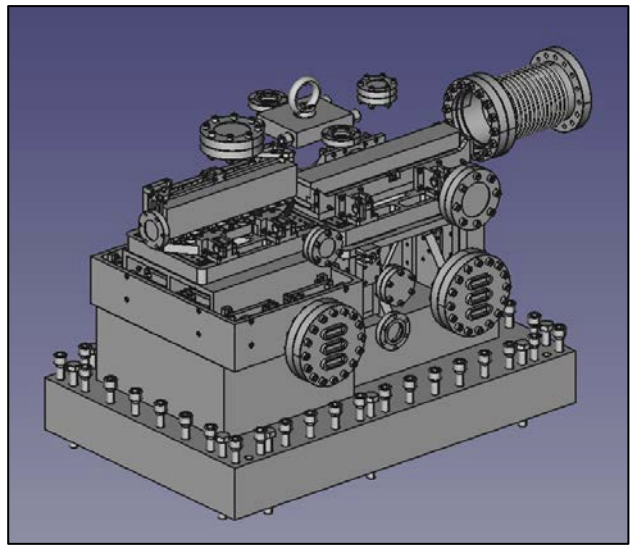

Figure 7. Conceptual design of the complete setup for the high-flux KB mirror system, showing phase plate, mechanics, mirrors, and flanges. The vacuum vessel itself has been removed from the drawing to show the details.

## CONVENTIONAL FACILITIES

Conventional construction continued its excellent progress as three of the Lab–Office Buildings are substantially complete and beneficial occupancy was received for these in October. The ring building contractor has completed basic contract work and continues to work through the remaining punchlist items, moving closer to contract closeout.

With all areas of the ring building now occupied, the ring building contractor has completed the major work scope. All areas slated for the installation of accelerator equipment have been accepted from the contractor and are now being utilized for installation activities or staging and storing equipment and materials as they are readied for installation. The remaining ring building contractor work includes resolution of all punch-list items, completion of system commissioning and operator training, delivery of remaining operations and as-built documents, and final sitework. Following completion of all physical work at the site, final demobilization and contract closeout will commence. The contractor has already partially demobilized, removing most field office trailers to enable final site restoration. It is anticipated that the ring building contractor's site presence will end by November 2012, although they will continue to be available for any warranty work.

Construction of the five LOBs continues to make excellent progress. Construction activities in LOBs 1, 2 and 3, including the HXN area, are now completed and the pre-occupancy items identified during previous beneficial occupancy reviews have been completed. Beneficial occupancy for these buildings has been received and office furniture installation is slated to begin in November to prepare the buildings for new occupants in early January.

LOBs 4 and 5 are progressing on or ahead of schedule and are now fully enclosed. Steel, concrete, and exterior enclosure work and the interior HVAC are nearly completed. Interior partitions and finishes are underway and completion of the project scope for LOBs 4 and 5 is on track for December.

Sitework for the LOBs and the site overall is nearing completion. All major paving is now in place. With building exteriors now complete, the final site grading, topsoil distribution, and seeding are completed, although some areas may require touch-up.

Beneficial occupancy readiness evaluations (BOREs) have been completed for LOBs 1, 2, and 3 (including the HXN beamline extension). LOBs 4 and 5 will be completed in the late-December time frame. The BORE process ensures that all life safety and code compliance requirements are in place prior to staff occupying the LOBs. Work to close out the

remaining post-occupancy items from the ring building continues and is nearly complete. Operational Readiness Evaluations are now being planned for the laboratory space in LOB 3. This process, similar to the BORE, will ensure that all life safety, code compliance, and work planning/controls are in place prior to commencing with laboratory work.

Conventional construction activity continues to wind down, as the ring building and LOBs 1, 2, and 3 are completed except for punchlist work. The focus of construction is now on LOBs 4 and 5. Increased emphasis is being given to safety as the contractor demobilizes. Historically, this phase of a construction project results in increased injuries and claims. Enhanced communications and job planning are being implemented to minimize this risk. Overall, the contractor work force totals about 60 persons.

## COST/SCHEDULE BASELINE STATUS

The cumulative cost performance index (CPI) for the Project overall is 0.99, and the cumulative schedule performance index (SPI) is 0.95, both well within the acceptable range. The Project is 83% complete, with 42.1% of contingency and management reserve, based on EAC work remaining.

The project's current-period yellow schedule variance (SV) with a current-month SPI of 0.86 (-$1.4M) is due to delays in conventional construction of LOB 5, Experimental Facilities beamline procurement, and Accelerator Systems Pre-Ops Integrated testing.

In WBS 1.3, positive schedule performance in October for injection and storage ring systems resulted in a positive SPI of 1.10, $397K. Accelerator systems schedule performance has continued to improve, with a cumulative SPI of 0.90 for green status and the cumulative SV (-$25.8M). Pre-Ops WBS 1.6.2, Integrated Test of accelerator systems, is behind schedule for October (-$356K), and the Pre-Ops Spares budget incurred a negative schedule variance (-$460K).

Cumulative SPI for WBS 1.4, experimental facilities, has continued to decline from the previous month, with a yellow-status SPI of 0.88 (-$4.2M) due to delays in the beamline component procurements contributing to an overall negative SV for the month (-$489K) and SPI of 0.80. The cumulative CPI for WBS 1.4 is 1.04, green, but the current-period cost variance is red at 2.28, $1.1M, due to untimely processing of accrued cost.

Conventional Facility's October SPI is red, 0.48 (-$514K), due primarily to delays in LOB 5 work and in the delivery of standard equipment. The cumulative conventional construction SPI is 1.00, green status (-$1.2M), attributed to delays in the delivery of office furniture and Commissioning.

The current-month CPI for the overall NSLS-II project is a negative variance (-$754K), green status, with CPI 0.92. The Project-level cumulative CPI is 0.99 (cost variance -$6.1M), green status.

The critical path for the Project remains the same as in September and goes through the installation of power supplies and instrumentation in the racks. The critical path continues through EPU installation, integrated testing, final survey, and commissioning of the Accelerator Systems. The early Project completion date remains at June 2014, which is consistent with the baseline schedule. There are 12 months of float between the Project's early completion milestone and CD-4, with approximately 38% schedule contingency.

## NEWLY HIRED

Arman Arkilic – Controls Engineer – Accelerator Division

## ACRONYMS

| | |
|---|---|
| ARRA | American Recovery and Reinvestment Act |
| BAC | Budget At Completion |
| BORE | Beneficial Occupancy Readiness Evaluation |
| BPM | Beam Position Monitor |
| BtS | Booster-to-Storage Ring |
| CAD | Collider-Accelerator Department |
| CHX | Coherent Hard X-ray beamline |
| CPI | Cost Performance Index |
| CSX | Coherent Soft X-ray beamline |
| DFE | Digital Front End |
| DI | Deionized |
| EAC | Estimate at Completion |
| EPICS | Experimental Physics & Industrial Control Sys. |
| FDR | Final Design Review |
| FOE | First Optics Enclosure |
| HFM | Horizontally Focusing Mirror |
| HXN | Hard X-ray Nanoprobe beamline |
| IOC | Input-Output Controller |
| ISR | In-Situ Resonant X-ray Studies beamline |
| IXS | Inelastic X-ray Scattering beamline |
| LHe | Liquid Helium |
| LLRF | Low-Level RF |
| LOB | Lab–Office Building |
| LN2 | Liquid Nitrogen |
| LtB | Linac-to-Booster |
| MLL | Multilayer Laue Lens |
| NEXT | NSLS-II Experimental Tools (beamlines) |
| P1, P2… | Pentant 1, Pentant 2, etc. |
| PCW | Process Chilled Water |
| PDR | Preliminary Design Review |
| PLC | Programmable Logic Controller |
| PS | Power Supply |
| SIX | Soft Inelastic X-ray Scattering beamline |
| SLM | Synchrotron Light Monitor |
| SMI | Soft Matter Interfaces beamline |
| SPI | Schedule Performance Index |
| SR | Storage Ring, also Synchrotron Radiation |
| SRX | Submicron Resolution X-ray Spectroscopy |
| SV | Schedule Variance |
| TL | Transfer Line |
| XPD | X-ray Powder Diffraction beamline |
| YAG | Yttrium Aluminum Garnet |

The NSLS-II Project is being carried out to design and build a world-class user facility for scientific research using synchrotron radiation. The project scope includes the design, construction, and installation of the accelerator hardware, civil construction, and experimental facilities required to produce a new synchrotron light source. It will be highly optimized to deliver ultra-high brightness and flux and exceptional beam stability. These capabilities will enable the study of material properties and functions down to a spatial resolution of 1 nm, energy resolution of 0.1 meV, and with the ultra-high sensitivity necessary to perform spectroscopy on a single atom.

## DOE Project Milestone Schedule

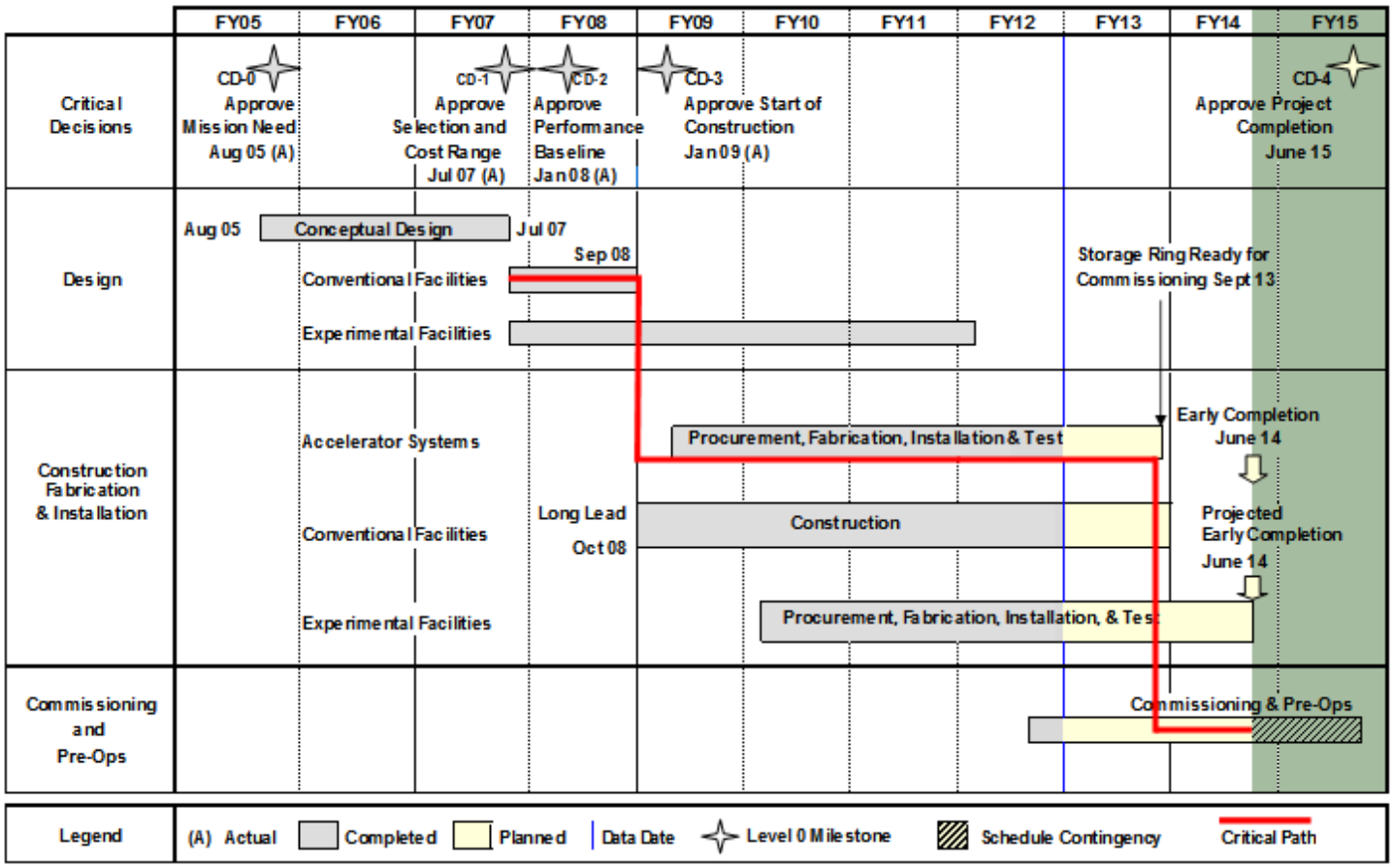


### Funding Profile

| Funding Type | NSLS-II Funding Profile ($M) | | | | | | | | | | | |
|---|---|---|---|---|---|---|---|---|---|---|---|---|
| | FY05 | FY06 | FY07 | FY08 | FY09 | FY10 | FY11 | FY12 | FY13 | FY14 | FY15 | TOTAL |
| R&D | | | 3.0 | 20.0 | 10.0 | 2.0 | 0.8 | | | | | 35.8 |
| OPC | 1.0 | 4.8 | 19.0 | | | | | | | | | 24.8 |
| PED | | | 3.0 | 29.7 | 27.3 | | | | | | | 60.0 |
| Construction | | | | | 216.0 | 139.0 | 151.3 | 151.4 | 47.2 | 26.3 | | 731.2 |
| Pre-Ops | | | | | | | 0.7 | 7.7 | 24.4 | 22.4 | 5.0 | 60.2 |
| Total NSLS-II Project | 1.0 | 4.8 | 25.0 | 49.7 | 253.3 | 141.0 | 152.8 | 159.1 | 71.6 | 48.7 | 5.0 | 912.0 |

The NSLS-II Project Progress Report is prepared monthly for submission to the Department of Energy.

This condensed version is available to the public at the NSLS-II website in PDF format. For questions or comments contact the editor, Kathleen Robinson, at krobinson@bnl.gov,

or via mail at: Room 37, Bldg 830M, Brookhaven National Laboratory, Upton NY 119873.