National Synchrotron Light Source II

Project Progress Report

April 2013 Activity

April 30 dawns dry and clear as staff begin to arrive.

report due date:
May 20, 2013

Steve Dierker
NSLS-II Project Director

Brookhaven National Laboratory
Upton, New York 11973

OVERALL ASSESSMENT

The National Synchrotron Light Source II Project continued to make excellent progress with the current month schedule performance index (SPI) for the overall project at 1.39 (+$2.1M). The cumulative cost and schedule indices for the overall project are 0.99 and 0.96. The project was 85% (88%) complete with 42% (54%) of contingency and management reserve for the remaining EAC (BAC).

Conventional construction activities are nearly complete, while work to address punchlist items continues. Proposals for the 2nd satellite building were received and evaluated. With all proposals under the estimated cost, the project was instructed by the Federal Project Director to submit a change request to add the 2nd satellite building to the project scope as currently planned in the project contingency spend plan.

Accelerator Systems made excellent progress; the schedule performance continued to improve, with an April schedule performance index (SPI) of 2.59, +$1.85M. Installation and integrated testing of the booster and storage ring continued at a pace better than planned, on track for substantial completion by the end of this summer. The production of technical components is nearly completed, and an enhanced radiation shielding design for the injector complex has been completed and reviewed. Stands for beamline front ends were installed, and installation of the cryogenic system is moving ahead. Production insertion devices are being delivered as scheduled.

Experimental Facilities also made satisfactory progress in April with a monthly SPI of 1.37, +$501K. Excellent progress continued in hutch and utility installation, and fabrication activities of beamline components at various vendor sites. Factory acceptance testing at vendor sites continued, and delivery of the major optical systems has begun with the approval of flat mirrors for the CSX-1 and CSX-2 beamlines.

Based on the progress of installation and implementation of the Corrective Action Plan from the Linac beam mis-steering event, the project schedule has been continuously optimized. The project will continue to strive to complete activities to enable initial commissioning of the beamlines with beam by June 2014. The updated critical path runs through Accelerator Readiness Review, the commissioning of the booster and storage ring, followed by delivery of the additional Insertion Devices. The project has 63% (10 months) of schedule contingency for the remaining duration of 16 months before the projected completion date of August 2014.

UPCOMING EVENTS

7th International Workshop on Radiation Safety at Synchrotrons	May 8–10
Review of Incorporation of Elliptical Undulators in NSLS-II	May 29–30
CHX Beamline Advisory Team (BAT) meeting	June 11
Accelerator Systems Advisory Committee Meeting	June 20-21
DOE Review of NSLS-II Project	July 16–18
DOE CD-2 Review of NEXT Beamlines Project	Jul 30–Aug 1
NSLS-II First Experiments Workshop	Aug 12–13
BAT meetings for HXN, CSX-1, CSX-2, and SRX beamlines	August
XPD BAT meeting	September

ACCELERATOR SYSTEMS

Accelerator Systems continue to make good progress. The schedule variance is steadily being reduced. All large procurements are in the final state of production. Production units of insertion devices are released for shipment. Installation and integrated testing proceed better than anticipated. Accelerator Systems are on target for substantial completion of technical component installation in late summer 2013.

Accelerator physics. Accelerator physicists have been preparing for a review of their work on accommodation and integration of insertion devices into the accelerator lattice and beam optics. A final lattice for commissioning of the storage ring has been prepared. They also are investigating potential beam loss due to possible failure modes, and the corresponding consequences for local shielding. Accelerator physics continues to be strongly involved in generating a database with commissioning data and in the generation of high-level applications software for commissioning and operations.

Injector. With the technical subsystems of the injector completed, the injector team has performed extended integrated testing of all the subsystems through the control systems. A number of small errors and inconsistencies have been identified and resolved during testing, bringing us into a strong position for injector commissioning.

All installation activities for the linac-to-booster (LtB) transfer line (TL) have been completed and LtB-TL Magnet Unit Testing and Integrated Testing are complete. Low-power magnet Unit Testing in the booster-to-storage ring (BtS) TL has begun. Final alignment of the booster component is completed.

The BST-II and SR-IS Support Stands were temporarily installed and aligned in the SR tunnel, which made it possible to mark the floor for drilling and scarifying.

During April the prototype kicker power supply was connected to a fully assembled SR kicker. The supply was pulsed to 10 KV to produce a pulsed current 10% greater than specified for the kicker. Pulse current stability of better than 0.1% was obtained throughout a 2-hour test with a pulse repetition rate of 1.2 Hz. Most components for the kicker chassis assemblies were received from the vendor by the end of April, with the remaining parts due during the first week of May.

The ceramic kicker vacuum chambers are under construction by Friatec in Germany. They finished one chamber completely, including the 2 micron-thick titanium coating. Three other chambers had to be reworked when ceramic-to-metal braze joints failed during shipping to the coating subcontractor, GSI. Additional delays may occur due to limited availability in the GSI schedule until June. Friatec is trying to expedite this, but unless GSI accelerates their production schedule, the last of the four chambers needed for the storage ring will not be delivered until July.

The SR septum has been installed in the pulsed magnet lab for testing. No leaks have been found, and high-potting of the septum coil shows no contact between the coil and the magnet yoke, nor the coil and the chamber. The septum will be further tested using local controls and only current measurements (no

field measurements), to mitigate the risk of contamination of the vacuum chamber. Once testing is complete, the SR septum will be transferred to Bldg. 740, where it will be fiducialized together with the DC septum.

Supplemental shielding. The design of the Booster and BtSTL supplemental shielding has been completed. The production of stands and supports is far advanced and installation of supplemental shielding is well underway (Fig. 1). The shielding design work has been reviewed by the Photon Sciences Radiation Safety Committee.

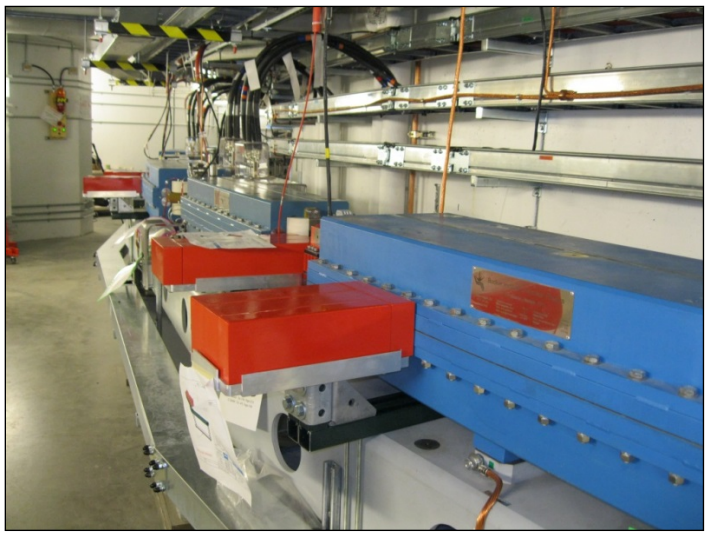

Figure 1. Dipole shadow shield

Power supplies. The first main dipole power supply has been delivered and has been rigged in place on the storage ring mezzanine. The second unit is in final testing at the manufacturer's facility and should be delivered in May.

Power supply controller chassis have been installed in pentants 1–4, and pre-testing for the three cells in P5 was completed. Regulators are needed for P1–P4. Power supply interfaces (PSIs) for all of P1 have been tested and configured, as well as the transport lines, booster power supplies, and booster pulse power systems for P2, P3, and P4. Cells 17 and 18 of P5 have been tested. More resources were added to troubleshoot the remaining PSIs.

Electrical utilities. Remaining work on electrical utilities includes pulling special diagnostic cables in P5 and AC connections in the compressor building.

Beamline front ends. Eleven of twelve first and second collimators are completed and installed with lead. Three of the six “day-one” masks have been installed, and all day-one safety shutter bodies have been manufactured and surveyed. The six photon shutter bodies are finished and are being mounted on supports. The X-Y stage prototypes are now being manufactured, and drawings for the V-Cone flow meter have been released. All front end (FE) bellows are on order. An initial layout of a generic 3PW FE layout with even and odd cells has been released.

Instrumentation. The assembly of the Cell-30 Diagnostics Synchrotron Light Monitor (SLM) beamline has advanced well. Pre-survey of all SLM beamline components has been completed. The optical table, cable tray, and smoke detectors have been installed in the SLM hutch. Ninety-nine percent of the SLM vacuum components have been cleaned and baked for final assembly. The first mirror support has been installed and the final survey has been completed. The second, third, and fourth mirror and shielding enclosures have been assembled. Good progress was also made on the Cell-22 Diagnostics BMA/3PW beamline. Supports have been installed and surveyed. Optical element supports and slit holders have been assembled. Gate valves have been tested and delivered to the vacuum group.

Installation in the storage ring proceeded well; we are starting to ameliorate the schedule delay. The deionized (DI) water tie-in of P3 and P4 and flushing of the underground piping could not be completed due to a leak in SB-4 that is being repaired. The survey team is currently working on the FE components, final booster alignment, EPOCH 6, vacuum straights, and profiling tests. Shielding installation at the SR ratchet wall DI piping penetrations is complete, excluding locations obstructed by painting rework and hutch construction. The pulling of special diagnostic cables is underway. Acceptance testing of the P2 and P4 aluminum pump skids is complete. Acceptance testing is outstanding for the P5 copper pump skid and the P3 and P5 aluminum skids, which are pending additional hardware work; testing is scheduled for May 21–22. All suction diffuser installation on the secondary copper pump skids is now complete. The installation of the SR tunnel PPS gate extensions is in process (Fig. 2).

Figure 2. Personnel Protection System (PPS) SR Tunnel Gate Extension.

All baseline FE stands have been installed (Fig. 3). The collimators were installed in the baseline FEs. Vacuum chamber welding rework is complete. Bellows installation in the cells is complete. The installation of the cryogenic plant is now moving ahead, with most major components delivered. The cryo manifold box, control cabinet, and valve box have been rigged to the RF mezzanine (Fig. 4). Installation of the LN2 piping along the SR mezzanine is complete. Linde is currently installing piping in the compressor building and piping supports in the RF building. AC outlets have been added throughout the RF building.

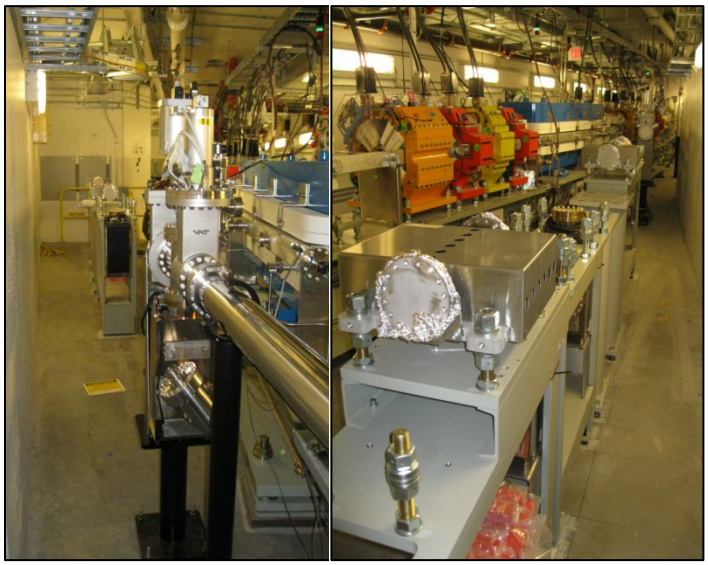

Figure 3. CSX and HXN front ends.

Figure 4. Lower RF mezzanine, with the cryo manifold box, control cabinet, and valve box in place..

Table 1. NSLS-II Accelerator installation progress at the end of April 2013.

Achieved	Jul-12	Aug-12	Sep-12	Oct-12	Nov-12	Dec-12	Jan-13	Feb-13	Mar-13	Apr-13
Mechanical Utilities	38%	39%	60%	61%	62%	68%	73%	74%	78%	80%
Electrical Utilities	69%	72%	75%	80%	85%	91%	95%	96%	99%	99%
Magnets	65%	68%	73%	78%	87%	93%	99%	100%	100%	100%
Vacuum	14%	15%	21%	30%	38%	39%	44%	53%	65%	82%
Power Supplies	22%	27%	30%	36%	43%	48%	54%	65%	70%	81%
Instrumentation	35%	36%	37%	46%	53%	58%	63%	66%	74%	80%
Frontends	0%	0%	0%	1%	2%	6%	6%	11%	15%	23%
RF	33%	35%	38%	40%	45%	47%	49%	52%	57%	59%
Inje Straight	0%	0%	0%	0%	0%	0%	0%	0%	0%	0%
LINAC+Booster	42%	55%	74%	82%	92%	95%	96%	97%	97%	99%
Total	**41%**	**45%**	**52%**	**57%**	**63%**	**67%**	**71%**	**75%**	**79%**	**84%**

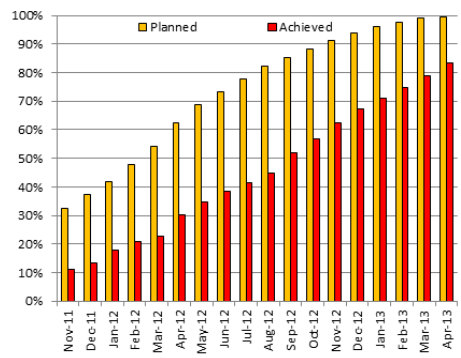

EXPERIMENTAL FACILITIES

April was another good month for progress with Experimental Facilities. Optics such as the flat mirrors for CSX-1 and CSX-2 have arrived at BNL and are scheduled for evaluation and testing in the metrology facilities in Bldg. 703. The factory acceptance testing (FAT) process continued with further beamline component testing at vendor sites. While most fabrication activities remain on or close to schedule, there are a few delays anticipated with beamline components. For example, the FAT for the XPD Laue monochromator is being moved from July 25 to September 5, and delivery to site from September 11 to October 23. This 6-week delay will permit changes to correct the non-compliances of the current design of the crystal cage, as identified in the March testing at the Diamond Light Source (DLS). Despite this delay, the XPD beamline should be ready at the early completion date of June 2014. And fortunately, due to the results of the testing at DLS, technical risks associated with the high heat load environment will be mitigated. Hutch acceptance continued in April, and utility installation is now underway at CSX-1, CSX-2, HXN, and XPD. Efforts have been made to coordinate the utility installation so that component deliveries remain on schedule. Also in April, the CSX-2 BAT meeting was held to evaluate progress and look carefully at the commissioning and early science readiness plans for this branch beamline.

CHX. The contract for a list of instruments to complete the CHX optical components package has been awarded to Bruker AS GmbH. Fabrication of the optical package is on schedule for an October 2013 delivery. The longest lead time procurement, a highly polished flat mirror fabricated by J-Tech in Japan, is now completed (Fig. 5, left) and ready for shipment to Bruker. High-precision positioners (Fig. 5, right) for an optical table to support beam conditioning optics in the end station were delivered by ITD, Ltd. and are being tested.

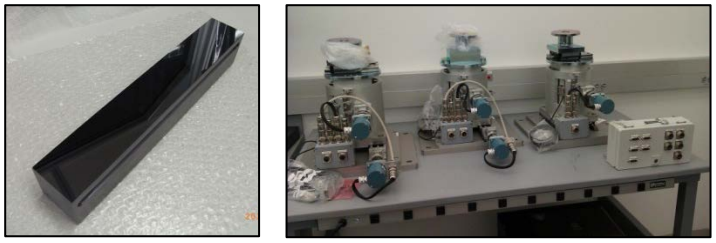

Figure 5. *Left*: CHX horizontal mirror substrate fabricated by J-Tech Inc. *Right*: Optics table positioners ("legs") delivered by ITD Ltd..

The RFP for the CHX Transfocator is now complete. At least three vendors have declared their intensions to submit proposals, which are due May 24.

CSX. Beamline utilities pylons were delivered and installed at the experimental floor, facilitating the start of installation of beamline utilities, fluids, and electrical power. At the full polarization control branch, April was the month for the final design review for the toroidal mirror package; the mechanical design presented by FMB-Oxford was satisfactory and approval of the FDR will be official in May.

Figure 6. Coherent branch monochromator vessel at FMB-Berlin factory.

Weekly meetings closely track assembly of the beamline monochromators (Fig. 6). The internally water cooled mirrors for monochromators M2A/M2B were delivered and visually inspected (Fig. 7). Metrology of these mirrors is planned for the end of May and beginning of June.

Figure 7. M2A monochromator internally water cooled mirror.

Two gratings, C70 and P150, are in their FAT metrology phase and soon will be shipped to BNL. Vacuum equipment is arriving; the first items to be tested will be the ion pump controllers. The CSX-1 M1A mirror fabrication is on schedule, and the FAT is planned for late May.

HXN. The FAT for the HXN Beamline Component Package took place April 8–19 (Fig. 8). Tests were performed on all components except the monochromator and the collimating mirror; all items tested met the specifications.

During the FAT, all motion systems were tested using the NSLS-II motion control system and all motor parameters were set. Additional work is needed on the monochromator, but the technical issues are minor and are expected to have no impact on the schedule. The mirror optic for the collimating mirror is about two months behind schedule, but a mitigation plan is in place and the installation date should not be affected by this delay. The HXN Beamline Component Package is scheduled for installation in early June 2013.

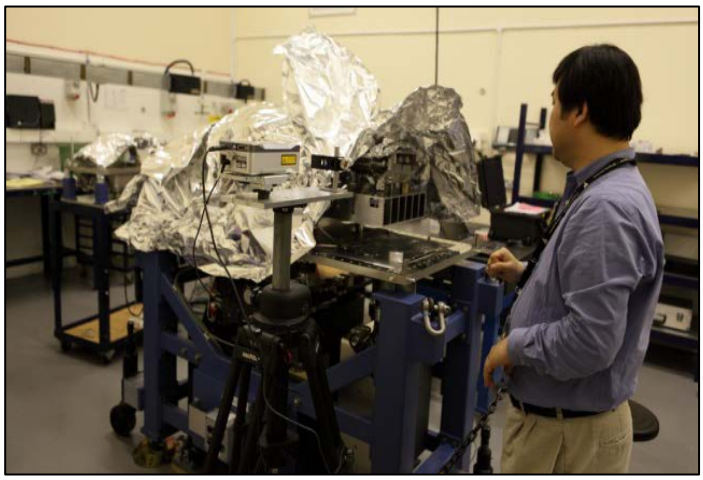

Figure 8. Vibration measurement setup for the horizontal focusing mirror using a laser interferometer during the HXN Factory Acceptance Tests.

The HXN x-ray microscope, currently being constructed by the HXN team using in-house expertise, employs novel nanopositioning stages and laser interferometers to achieve 1 nm positioning stability. By working closely with the NSLS-II Controls group, the HXN team has successfully prototyped the microscope controls. Figure 9 shows the control diagram developed for EPICS control and one of many custom-designed printed circuit boards designed for incorporating the signal processing required for controlling the nanostages using Delta Tau Power PMAC. (Details of the diagram can be discerned at 200% view in the online version of the report.)

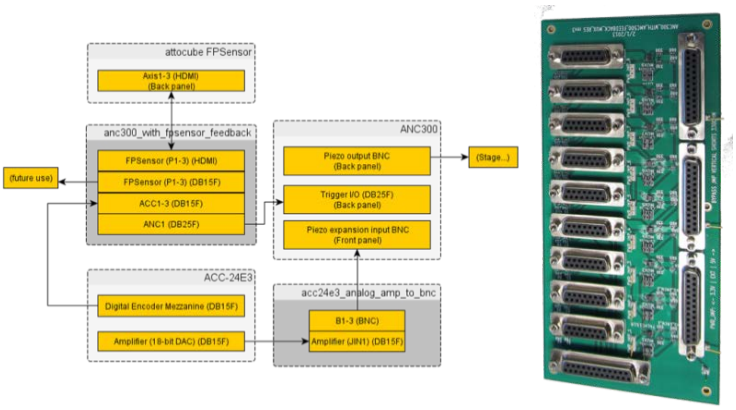

Figure 9. Control architecture of the nanopositioning stages for the HXN X-ray Microscope: *Left:* Control diagram for stick and slip nanopositioning stages. *Right*: Custom-designed printed circuit board for integrating the hardware interfaces for EPICS control using Power PMAC.

IXS. The IXS team held two PDR reviews in April at vendors' sites. One was for the IXS Spectrometer at Huber Diffraktiontechnik GmbH, responsible for design and fabrication of the instrument. The other review was for the remaining transport components needed to complete beam transport from the first optics enclosure (FOE) to the sample location. These components were recently added to the FOE Components contract with Bruker AS GmbH. Both PDRs

went well. The IXS spectrometer is now in the final design stage, with the FDR meeting scheduled for late August 2013. The PDR for the transport components focused on the shielded transport pipe linking hutches B and C and the interfaces with other existing beamline components. The radiation safety of the shielded transport pipe design was also reviewed by an ad-hoc committee involving members of the PS Radiation Safety Committee. The FDR of the transport components is now scheduled for May 23 at BNL.

During the PDR trip, the IXS team also visited Winlight-X, the Toyama subcontractor fabricating the mirrors and benders for the IXS KB Mirror System. The mirrors were in production (Fig. 10) during this visit; the contract for the entire system is currently on schedule.

Figure 10. Si mirror blanks for the IXS KB Mirror System at Winlight-X.

SRX. The SRX team continued to closely monitor the progress vendors made in fabricating the components for both large optical packages, the SRX Beamline Optics and the KB Mirror System. In weekly teleconferences, vendors report their progress and work planning. Important activities continue to be the design of the sample environment and sample stages in context, with correct positioning of the interferometer, control of stage movement, and placement of the fluorescence detectors. For experiments on either the high-flux KB setup or the high-resolution KB setup, fluorescence and transmission detectors must be moved from one optical system to the other. A gantry is being designed to accomplish the repositioning. Figure 11 shows the most recent design, with independent platforms for the fluorescence and transmission detectors.

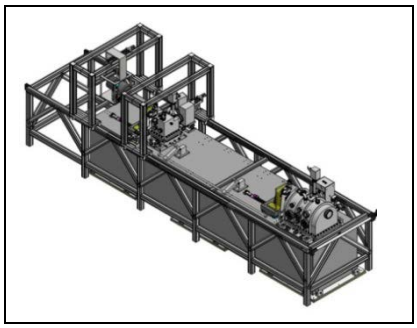

Figure 11: Gantry design for moving detectors from the high-resolution setup to the high-flux setup.

XPD. Tests of Part 1of the Laue-Laue monochromator were held at Diamond Light Source March 14–22. A number of areas were identified for improvement, involving rollers for the bender, silver foils for cooling, and the shape of the crystal. Additional tests will be needed, to achieve the best configuration. The FAT is being moved from July 25 to September 5, and delivery to site from September 11 to October 23. This 6-week delay is necessary to remedy non-compliances of the current design for the crystal 1 cage, which is now the subject of design discussions. The manufacturing drawings for Part 2 are all prepared except for the bender drawings, which are being updated to include pivot rollers. The cooling and crystal shape are not a risk for the second crystal cage. Long-leadtime descriptions (for granite and parts for the longitudinal translation) will soon go to vendors for quotation.

The FAT for the vertically focusing mirror began April 24 and will conclude in early May. The equipment is compliant. Development of the HASP is underway. The mirror equipment is being packed for shipping (Fig. 12). Mirror delivery to BNL, on-site metrology, and installation in enclosure 28-ID-A are scheduled for June 12–28.

Figure 12. XPD mirror at Winlight-X.

The FDR for the XPD diffractometer was carried out with contractor representatives on April 9 at BNL. The revised FDR report was submitted on April 19, and FDR approval was received on April 23. The design of the granite elements was revised to reflect requests made during the FDR and has been approved. The detector mounting disc design has been completed and approved. Modifications to the harmonic gearboxes are completed and orders for the gearboxes and rotary bearings have been placed. The design of the sample table is

complete; detailed drawings are being prepared for release to production for manufacture by May 10. The casting for the linear stage has been released for production; the completion date is the end of May. The manufacturing process of the spindle shafts' three main elements is on track and scheduled for completion by the end of May. The motors are scheduled for delivery to RPI on May 20; to assist with the control integration process, a motor will be shipped to BNL for testing. The final delivery date is unchanged.

First tests on hybridized sensors for the x-ray photon counting pixel area detector are completed and show that the hybridization yield is acceptable. Several detection schemes have been tested; Shottky contacts and electron collection give superior results. Test beam time at SOLEIL and the ESRF is being scheduled. The selection of the best C10 sensor for delivery to BNL depends on these final tests.

For the XPD lead/steel enclosures, Hutch D is now erected. Roof painting is done at 28-ID-A, -B, and -C. The crane at 28-ID-B has been approved. Utilities development is nearly completed: draft 3D CAD models and installation drawings are being reviewed; flow layout is in progress. Development of the one-line diagram is completed. Mechanical utilities have been procured, including flow meters, transmitters, filters, manifolds, automatic valves, and Swagelok valves; piping has arrived. Installation of vertical cable trays in 28-ID-A is due to start the week of May 6.

The scope of supply and specifications for the multi-analyzer crystal x-ray detector are being revised to conserve costs and delivery time.

A solicitation for the robotic sample manipulator was posted on April 11. Proposals are due in mid May.

Proposals for the x-ray flat panel detector have been received and are being evaluated for the contract award.

The kickoff meeting for the beamline photon shutter took place on April 29.

COST/SCHEDULE BASELINE STATUS

The current-period schedule variance (SV) for the overall project is +$2.1M with an associated schedule performance index (SPI) of 1.39 This indicates strong schedule performance for the month due to positive activity in most areas of the project, including Accelerator Systems, +$1.8M, and Experimental Facilities, +$501K. The cumulative SV for the project has green status with a SPI of 0.96 (-$29.7M).

The current-month cost performance index (CPI) for the NSLS-II project is 0.82 (-$1.6M). The cumulative Project CV (cost variance) has green status at 0.99 (-$10.8M).

Experimental Facilities' cumulative SPI of 0.90 (-$5.2M) continued to improve from previous months due to improved schedule performance for the month by user instruments, contributing to an overall positive SV for April of +$501K and SPI of 1.37.

Conventional Facilities has an April SPI of 1.18 (+$137K), yellow status. The cumulative Conventional Construction SPI has green status at 1.0 (-$724K).

Accelerator Systems (WBS 1.3) had positive schedule performance in April of +$1.85M and a SPI of 2.59, due to continued positive schedule performance in many areas. The cumulative Accelerator Systems schedule performance continued to improve, with a SPI of 0.93 (-$18.98M), resulting in green status.

Accelerator Pre-Ops (WBS 1.6.2), Integrated Test, is again behind schedule in the current month with a negative schedule variance (-$359K) contributing to a continued negative cumulative schedule performance for all of Pre-ops WBS 1.6 (-$4.9M), SPI 0.77, red status. This schedule variance is due to delays in installation, which have in turn delayed integrated testing planned in WBS 1.6.2.

The Project was approximately 88% complete as of April 30 with approximately 54% remaining contingency/MR on BAC work remaining.

At the end of April there was approximately $57.7M remaining of Contingency and MR on the Project, based on the PCRs processed and approved through April 15. (Remaining MR is $1,647K.)

The Project EAC is $883,922K and MR/Contingency is approximately 42.3% of EAC work remaining. Project percent complete based on EAC work remaining is 84.5%.

The critical path has been revised to include activities in preparation for commissioning readiness and Booster and Storage Ring Commissioning with early completion of the project at June 2014, and delivery of the new scope additions in August 2014. There are now 10 months of float between the Project's early completion milestone and CD-4, with approximately 38% schedule contingency.

ENVIRONMENT, SAFETY, AND HEALTH

Actions identified in the corrective action plan (CAP) associated with the beam mis-steering event that occurred at the linac on May 29, 2012 continue to be addressed. Staff are being recruited from other BNL organizations and through contracts to augment existing PS staff, to ensure timely completion of these actions. Commissioning activities will not resume until all necessary corrective actions have been satisfactorily implemented and a successful ARR (Accelerator Readiness Review) is conducted. Increased attention is being given to revision/preparation of the authorization basis documents and procedures necessary to support the Instrument Readiness Review (IRR) and ARR.

All BOREs (Beneficial Occupancy Readiness Evaluations) for the NSLS-II facility have been completed, and work to close out the remaining post-occupancy items continues. Operational Readiness Evaluations (OREs) were conducted for the first three of ten laboratories in LOB 3, and pre-start findings have been completed. These labs are being used for assembly and testing of beamline components. The BORE and ORE processes ensure that life safety, code compliance,

and work planning/controls are in place prior to commencing with laboratory work. Conventional construction activity is nearly complete; work to address punchlist items continues. Painting of the roof deck in P1 is ongoing to correct a paint delamination issue. The repainting job is approximately 60% complete and is expected to complete by the first week of July. Fireproofing of two columns by the installation of sheet rock enclosures will be planned in the very near future.

Enhanced communications and job planning continue to be practiced in order to minimize the risk of increased injuries during project close-out.

NEWLY HIRED

Mohamed Benmerrouche – Radiation Physicist, ES&H
Stephen Farrugia – Mechanical Technician, Accelerator Division
Eli Stavitski – ISS Beamline Scientist, Photon Division
Gary Whitbeck – Mechanical Designer, Accelerator Division

ACRONYMS AND ABBREVIATIONS

ARR	Accelerator Readiness Review
ARRA	American Recovery and Reinvestment Act
BAC	Budget At Completion
BORE	Beneficial Occupancy Readiness Evaluation
BSA	Brookhaven Science Associates
BtS	Booster-to-Storage Ring
CAP	Corrective Action Plan
CHX	Coherent Hard X-ray beamline
CPI	Cost Performance Index
CSX	Coherent Soft X-ray beamline
CV	Cost Variance
DI	Deionized
DLS	Diamond Light Source
EAC	Estimate at Completion
ECN	Engineering Change Notice
EVMS	Earned Value Management System
FAT	Factory Acceptance Test
FDR	Final Design Review
FE	Front End
FOE	First Optics Enclosure
HASP	Health and Safety Plan
HVAC	Heating, Ventilation and Air Conditioning
HXN	Hard X-ray Nanoprobe beamline
ISR	In-Situ Resonant X-ray Studies beamline
IXS	Inelastic X-ray Scattering beamline
KB	Kirkpatrick-Baez
LOB	Lab–Office Building
LtB	Linac-to-Booster
NEXT	NSLS-II Experimental Tools (beamlines)
ORE	Occupancy Readiness Evaluation
P1, P2…	Pentant 1, Pentant 2, etc.
PCHW	Process Chilled Water
PDR	Preliminary Design Review
PLC	Programmable Logic Controller
PPS	Personnel Protection System
PS	Photon Sciences, Power Supply
PSC	Power Supply Controller
PSI	Power Supply Interface
RF	Radio Frequency
RFP	Request For Proposal
SAXS	Small-Angle X-ray Scattering
SLM	Synchrotron Light Monitor
SPI	Schedule Performance Index
SR	Storage Ring
SRX	Submicron Resolution X-ray Spectroscopy
SV	Schedule Variance
TL	Transfer Line
WBS	Work Breakdown Structure
XPD	X-ray Powder Diffraction beamline

The NSLS-II Project is being carried out to design and build a world-class user facility for scientific research using synchrotron radiation. The project scope includes the design, construction, and installation of the accelerator hardware, civil construction, and experimental facilities required to produce a new synchrotron light source. It will be highly optimized to deliver ultra-high brightness and flux and exceptional beam stability. These capabilities will enable the study of material properties and functions down to a spatial resolution of 1 nm, energy resolution of 0.1 meV, and with the ultra-high sensitivity necessary to perform spectroscopy on a single atom.

DOE Project Milestone Schedule

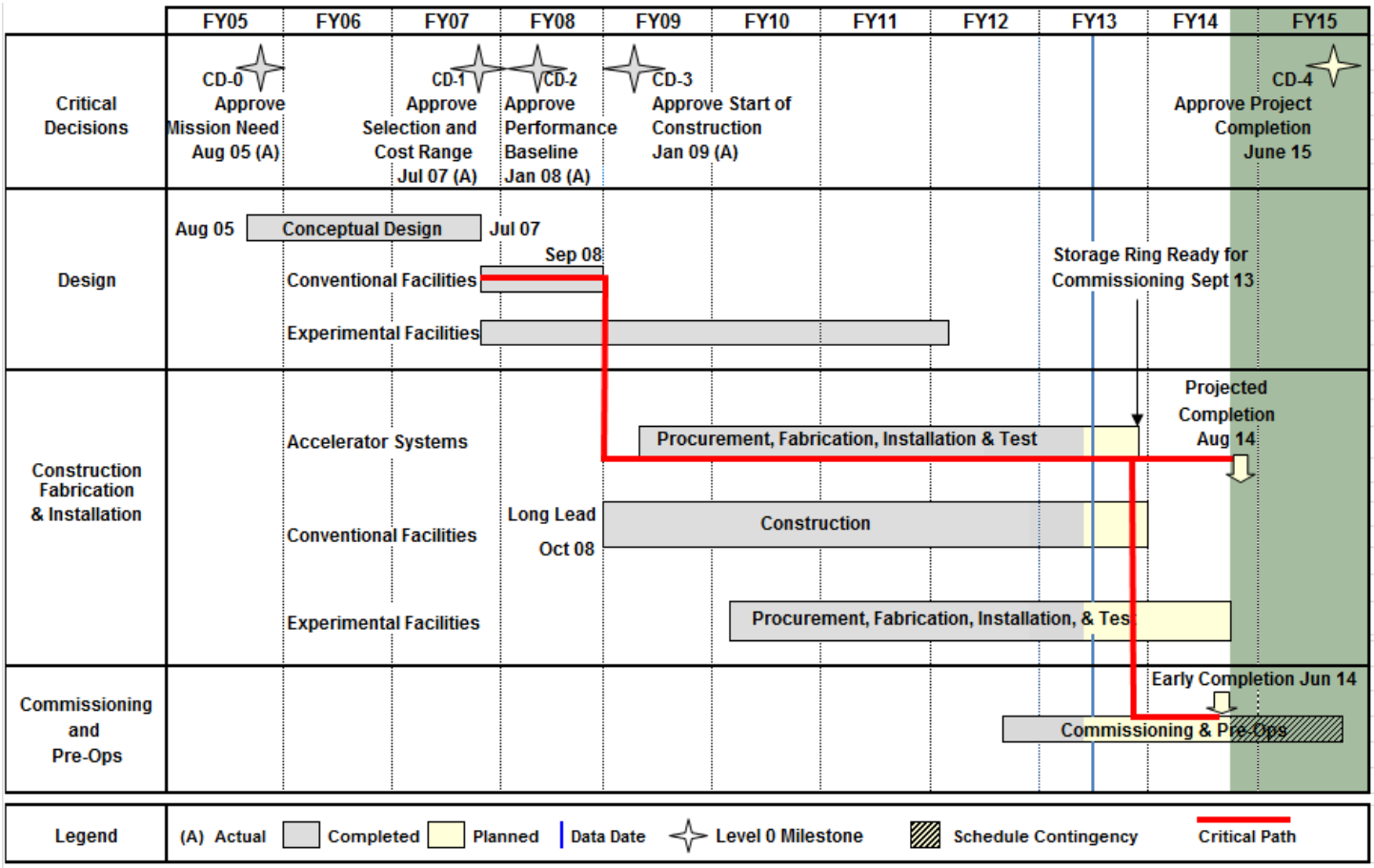

Key Personnel

Title	Name	Email	Phone
Federal Project Director	Frank Crescenzo	crescenzo@bnl.gov	631-344-3433
NSLS-II Project Director	Steve Dierker	dierker@bnl.gov	631-344-4966

The NSLS-II Project Progress Report is prepared monthly for submission to the Department of Energy.

This condensed version is available to the public at the NSLS-II website in PDF format. For questions or comments contact the editor, Kathleen Robinson, at krobinson@bnl.gov,

or via mail at Bldg 745, Brookhaven National Laboratory, Upton NY 119873.