NSLS-II 4-ID (ISR) Endstation Review

Meeting Date: July 31, 2015

The objective of this review is to assess the status of the NEXT endstation final design for the ISR beamline and its readiness to proceed to, or continue with, the construction phase. As of July 2015, most of the major endstation procurements are progressing and are expected to be awarded in the third quarter of FY15 and a number of smaller procurements and in-house design/build components remain to be completed. The review will identify any major residual design risks that must be mitigated prior to the start of full construction. It will also present an opportunity for support groups (Utilities, Safety Systems, Controls, ES&H, QA) to review the endstation designs as a whole and identify potential issues.

ISR (4-ID) Endstation Review Panel Charge Questions

1. Does the endstation's portion of the project performance baseline address the beamline's scientific program objectives? Yes - Based on the presented material the endstation meets the performance baseline, contingent on resolution of issues raised at the FDR. Is the endstation final design technically mature, sound, and likely to meet the performance expectations identified in the project performance baseline? Partially.

a) Polarization analyzer and collimator/slit assembly: concern for potential damage or misalignment from decoupled components and for difficulty to replace upstream window assembly.

b) Diffractometer: Consider adding proximity sensors on the circles of the diffractometer to protect the instrument from damage from collisions during angular motions.

c) Table Slides: Assure slides for the table are protected by covers that can be stood upon and that the endstation is easily movable by one person. Consider ≤ 30lb force requirement to translate the endstation table.

d) Cable management: Cables and hoses for vacuum, cryogenics, etc., should be routed to avoid interference with the six-circle and allow for full range of motion.

2. What are the major residual technical design risks, and are appropriate steps being taken to manage and mitigate these risks? Refer to responses in Step 1. The Displex system should have over pressure protection.

3. Is the design effort consistent with the planned procurement/fabrication strategy and sufficiently mature to support procurement/fabrication of major components? The end station components are ahead of schedule where the diffractometer FDR is ahead of schedule and the final design report is anticipated to be completed a couple of months before baseline. The area detector has been received and tested.

4. What ES&H/QA issues and risks remain to be addressed, if any?

Most ESH issues have been addressed including an emergency stop to disable the movement of the diffractometer. All vacuum interfaces need to be evaluated by BNL Pressure Safety SME. Refer to comments and feedback section for general ESH comments.

No major QA risks were identified. Contractor needs to provide a copy of the Acceptance Test procedure for BSA review and approval.

5. Have the interfaces between endstation subsystems and Common Systems and Beamline Controls been identified and detailed sufficiently to support successful endstation construction? Identification of the interfaces between endstation and common systems was discussed and appears to be sufficiently supported. Refer to response in 1-d above for cable management.

6. After construction and assembly, will this beamline's endstation(s) be able to sustain Instrument Readiness Review and lead to successful operations? Yes - The instrument design itself, pending responses from contractor to FDR review. However, ISR needs to assure that all of the appropriate documentation is ready and that any unreviewed ESH issues have been resolved. Refer to comments and feedback section for general QA comments.

Comments and Feedback:

In general a number of questions were asked by the review panel and attendees in regards to the design and operational feasibility of the endstation components based on the information provided in the presentation. The ISR team provided responses to show how and why the system will work as intended as well as limitations of the system components. Such questions addressed the vacuum system requirements, stability of equipment, detectors, engineering and controls support, assembly of components, ordering of components, installation of the components, safe use of equipment, and ease of use of the end station equipment.

The reviewers provided additional comments and feedback below in the areas of scientific, engineering, ESH, QA, controls, vacuum, assembly/installation, and utilities. The ISR Team should consider the feedback provided in the completion of the endstation design.

Scientific:

The six-circle instrument will provide the versatility required for the range of experimental techniques covered by the resonance and general diffraction/scattering scientific mission of the ISR beamline. The number of rotational axes and their ranges provide for the required coverage of reciprocal space and the ability to scan with the diffraction plane in any orientation, as well as for detector and sample alignment. CTR measurements, which are also part of the ISR scientific mission, require the addition of encoders to the phi and chi circles as was indicated at the diffractometer FDR. The CTRs are typically scanned by rotating the phi-circle and inaccuracies in phi positioning will render it impossible to reproducibly scan the sharp CTRs. Since CTR determination of 3D atomic structures requires scanning a complete set of distinct CTRs, accuracy in the Chi-circle is equally important. Because the combined motions of circles for various scans can be complicated and the potential collision areas change with the

relative positions of the circles, we suggest that proximity sensors be installed for "dynamical" collision avoidance. Relative soft limits can be programmed to some extent for the same purpose.

The polarization analyzer will provide for requirements of a subset of diffraction experiments that require polarization analysis of the diffracted x-rays. As discussed at the diffractometer FDR, in order to achieve polarization analysis of the full-range of energies assessable at ISR, the two-theta range of the polarization analyzer detector should be increased to accommodate the (002) reflection of pyrolytic graphite at 2.47eV (sulfur K-edge). A number of energy-relevant soft matter materials incorporate sulfur atoms. The design of the window mount at the upstream end of the polarization analyzer assembly should be checked to ensure that the window can be readily replaced or removed to install a bellows vacuum coupling to the sample chamber.

The double detector arms will allow for efficient and creative use of different combinations of detectors, such as polarization analyzer and 2D detector, or high-resolution analyzer-detector circle and area detector. The custom mount/slides on the detector arms are well-designed for switching instruments and the ranges and separation appear to be adequate. The specific support system for the polarization analyzer/collimator/slits should be redesigned to avoid potential misalignment or damage (see engineering section below). Removing the polarization analyzer separately from the slits/collimator assembly would allow for the use of the latter with other detectors. Care should be taken to provide a means for supporting heavy analyzers and detectors during installation and removal. If this is not easy and efficient, it may impact scheduling of different types of experiments. As discussed at the FDR, the weight-load of the two-theta arm was specified to only accommodate the weight of the area detector without allowance for an additional flightpath with integral scatter-guard slit assemblies. Maintaining the precision of the detector arm at higher weight loads (10-20 kg) is importance to ensure the long-term performance of the diffractometer.

The offset chi circle is necessary for mounting of environmental chambers, cryostats, etc, and the special, larger, offset on this diffractometer will allow for the mounting of a vendor-supplied cryostat carrier with adequate positioning resolution. Please also consider using a motorized z-post for other types of sample mounting and adjustment.

Because the diffractometer is so large (with the additional psi circle and its counterweight) and it is desirable for experimenters to be able to approach the sample stage as closely as possible, we recommend that the table slide rails be protected with sturdy covers that can be safely stood upon. Good bumpers at the ends will also prevent potential shock to the diffractometer that could cause misalignment or damage.

<u>Engineering</u>:

The rigid mounting scheme of the assemblies (guard slits, detector slits, and polarizer analyzer) on two individual dovetail slides stacked above another dovetail slide will hinder precise alignment of each component at its interface along the beam path. Typically, a coupling bellow will take out any misalignments in such a design. If limited space along the z-axis complicates the ability to include a bellow to segment the two individual dovetail assemblies, then design in manual adjustments for

alignment for precisely coupling the assemblies. A single long dovetail or simply coupled dovetails under the guard and detector slit assemblies may be a solution to the two narrow dovetails on the upper assembly as designed.

The cable management routing is not accommodating the wiring at the present location from the diffractometer. Relocate to a region on the diffractometer base to simply route to the cable tray.

The cable management for the cryogenics to the cryostat carrier is underdeveloped. The liquid nitrogen supply lines require a routing scheme developed to accommodate all the degrees of freedom of each axis of the 6-Circle's functionality without interference.

The 6- Circle Diffractometer should have the axis of motion limited when not in the beam position to avoid collisions with other surrounding components or structures. Collision protection requires careful consideration to avoid collisions with the surrounding components during the individual translations of the 6-Circle Diffractometer. When the diffractometer translates along the floor rail system out of the beam position, the counterweights could interfere with the side wall structure of the hutch panel in the as built location of the hutch. A careful evaluation of the distances at the installation location should be measured to assure the ability to translate safely into the open web of the wall panel with full clearance as intended.

A lifting plan and lifting provisions are required for removing each the assemblies from the diffractometer arm during reconfiguration. Although the loads could be manageable manually, lifting the assemblies could be challenging due to interference with clear access while straddling the translation rail on the floor.

Although protecting the two manual translation floor rails is a complex problem, maintaining the performance of the rail system is critical. A couple things to consider is a maintenance schedule for cleaning and lubricating for continuous smooth translation of the bearing blocks especially if left exposed during users interfacing the sample environment. In addition, since the expectation is for users to climb aboard the instrument during sample mounting, protecting the rails from damage at the floor level should include protecting exposed encoders, hard stops, and limit switches from potential damage.

<u>ESH</u>:

The Kapton window on the end of the analyzer should be evaluated by the pressure safety SME or designee. Although the Beryllium dome is thick and was previously used on X21, it should be evaluated since it is a vacuum interface. The planned Beryllium windows will need SME evaluation.

All Beryllium articles require a Beryllium Use Review Form (BURF). All containers or components with internal Beryllium articles need to be labeled, and all Beryllium articles need to be handled with gloves.

The emergency stop button was reviewed during the vendor FDR.

This hutch will have Oxygen monitoring due to the liquid nitrogen drop, so the cryostat does not add any further risk.

QA:

Design review(s) for A1/A2 equipment needs to be completed, documented, and actions closed. A top level traveler that verifies installation/commissioning readiness needs to be developed and executed. Operating procedure/manual needs to be developed and personnel trained on it. All these items need to be completed prior to an IRR.

Vacuum:

The 6-Circle Diffractometer will require active pumping on the Polarization Analyzer and Slit Assembly. The location of the vacuum pump should be identified along with any isolation valves and vacuum gauging for monitoring. The type of vacuum hose, routing and attachment points, to provide full free movement of the detector arm should be identified and engineered.

Review Committee members:

M. Buckley (Chair)
Ron Pindak (Science)
Jean Jordan-Sweet (Science)
Mary Carlucci-Dayton (Engineering)
Lori Stiegler (ESH)
Robert Todd (Vacuum)
Joseph Zipper (QA)

Attendees:

Refer to attendance sheet

10/15/2015

X

Michael Buckley
Research Operations Support Group Leader
Signed by: Buckley, Michael

Agenda and Charge for ISR (4-ID) Endstation Review

Date: 31st July 2015

Location: Bldg. 743 rm 177

The objective of this review is to assess the status of the NEXT endstation final design for the ISR beamline and its readiness to continue with the construction phase. As of July 2015, the major endstation procurements are complete or in progress through the FDR stage with the vendor. The review will identify any major residual design risks that must be mitigated. It will also present an opportunity for support groups (Utilities, Safety Systems, Controls, ES&H, QA) to review the endstation design as a whole and identify potential issues.

Time	**ISR (4-ID) Endstation Review**	**Speaker**
09:30-09:45	Executive Session (Review Panel)	
09:45-09:50	Introduction	Steve Hulbert
09:50-10:30	ISR Endstation	Christie Nelson
10:30-11:30	Executive Session (Review Panel)	
11:30-11:45	Close Out Session (Review Panel and ISR Team)	

Review Panel:
M. Buckley (Chair)
Ron Pindak (Science)
Jean Jordan-Sweet (Science)
Mary Carlucci-Dayton (Engineering)
Lori Stiegler (ESH)
Robert Todd (Vacuum)
Joseph Zipper (QA)

The Review panel will address the charge questions during the 10:30-11:30 Executive session and then discuss the responses to these questions with the ISR team during the close out session. Following the review, a report will be developed addressing the charge of the review panel listed on the following page. The review panel chair will organize the preparation of this report. Comments are welcomed by the attendees during the review.

ISR (4-ID) Endstation Review Panel Charge Questions

1. Does the endstation's portion of the project performance baseline address the beamline's scientific program objectives? Is the endstation final design technically mature, sound, and likely to meet the performance expectations identified in the project performance baseline?
2. What are the major residual technical design risks, and are appropriate steps being taken to manage and mitigate these risks?
3. Is the design effort consistent with the planned procurement/fabrication strategy and sufficiently mature to support procurement/fabrication of major components?
4. What ES&H/QA issues and risks remain to be addressed, if any?
5. Have the interfaces between endstation subsystems and Common Systems and Beamline Controls been identified and detailed sufficiently to support successful endstation construction?
6. After construction and assembly, will this beamline's endstation(s) be able to sustain Instrument Readiness Review and lead to successful operations?

The committee is requested to present their findings, comments, and recommendations at the conclusion of the review, and to send a report to the NEXT project director within three weeks of the conclusion of the review.

Buckley, Michael

Subject:	ISR (4-ID) Endstation Review - NSLS-II
Location:	Bldg. 743 Rm 177
Start:	Fri 7/31/2015 9:30 AM
End:	Fri 7/31/2015 12:00 PM
Recurrence:	(none)
Meeting Status:	Meeting organizer
Organizer:	Buckley, Michael
Required Attendees:	Jordan-Sweet, Jean; Pindak, Ronald; Carlucci-Dayton, Mary; Todd, Robert J; Stiegler, Lori; Zipper, Joseph; Nelson, Christie; Evans-Lutterodt, Kenneth; Lucas, Michael; Keister, Jeffrey; Hulbert, Steven; Yin, Zhijian
Optional Attendees:	zyin@bnl.gov; Fukuto, Masafumi

Location changed. Agenda and charge attached.

Agenda and Charge for ISR E...

You are invited to this review of the ISR (4-ID) endstation to assess the status of the final design for the ISR beamline and its readiness to proceed to, or continue with, the construction phase. This review will include both scientific and engineering elements.

The review panel will develop responses to a set of charge questions that will be provided as part of the agenda. The review panel will subsequently discuss the responses to the charge questions with the ISR team.

An agenda will be provided shortly and supporting documents will be provided to you prior to the meeting.

Review Panel:
M. Buckley (Chair)
Ron Pindak (Science)
Jean Jordan-Sweet (Science)
Mary Carlucci-Dayton (Engineering)
Lori Stiegler (ESH)
Robert Todd (Vacuum)
Joseph Zipper (QA)

Thank you for participating in this review,
Mike

NSLS-II
4-ID (ISR) Endstation Review
Attendance Sheet

Date: July 31, 2015

Name	Title	Department/Division or Company
Mike Buckley	Nos Group Leader	NSLS-II
Jean Jordan-Sweet	RSM	IBM Research
Steven Hulbert	NEXT PM	NSLS-II
Jeff Kuster	Deputy PM	NSLS-II
JOE ZUPPER	QA	NSLS-II
ROBERT TODD	VAC ENG.	NSLS II
Lori Stiegler	ESH	SHSD
Mary Carlucci-Dayton	PD BL ENG GL	NSLS-II
Ron Pindak	PM	NSLS-II
Michael Lucas	PD ISR Engineer	NSLS-II
Zhujian Yin	Controls	NSLS-II
Masa Fukuto	Phys	"
Christie Nelson	Beamline Sci	NSLS-II

NEXT Project Summary Schedule

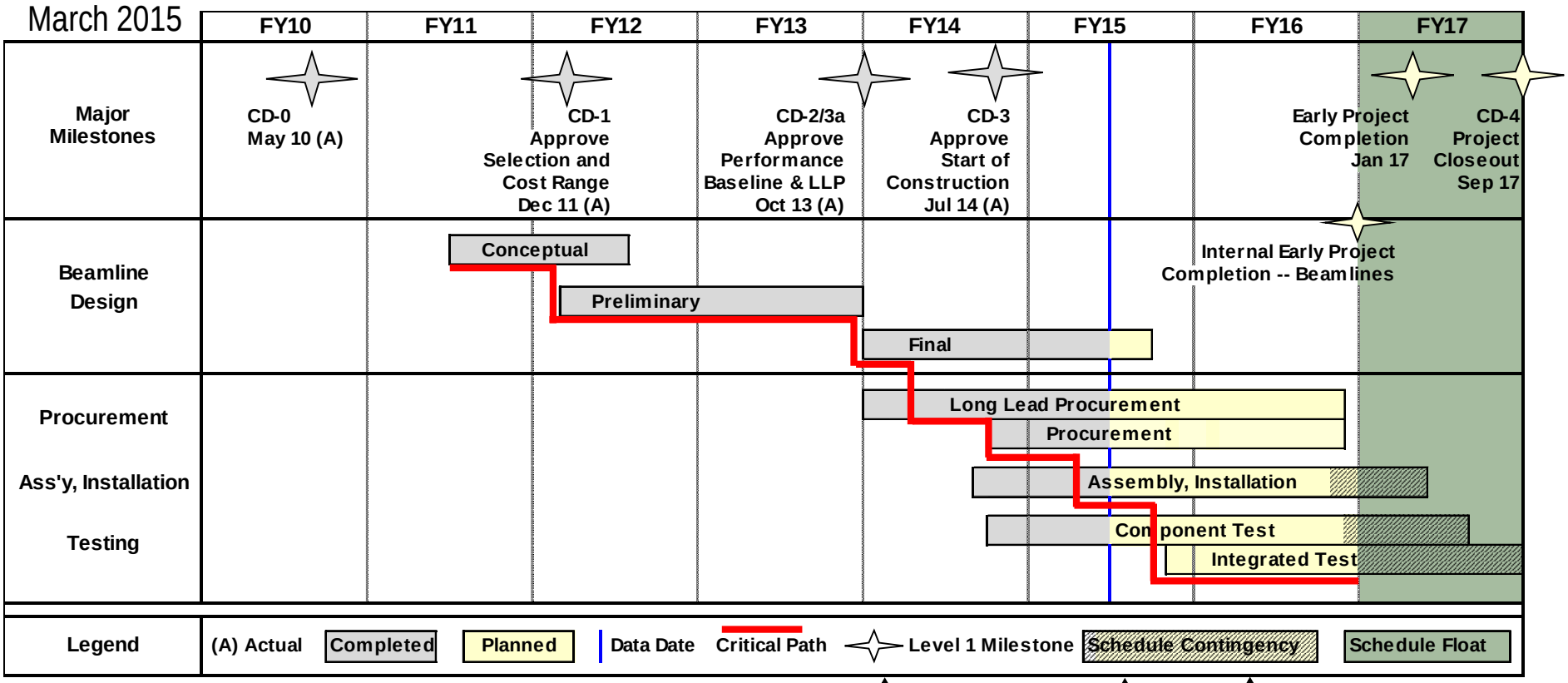

Photon Delivery System Reviews

Endstation Reviews

Early Science Workshop

U.S. DEPARTMENT OF ENERGY | Office of Science

BROOKHAVEN NATIONAL LABORATORY
BROOKHAVEN SCIENCE ASSOCIATES

ISR Endstation Review

Christie Nelson
Level 2 Manager for ISR Beamline
July 31, 2015

U.S. DEPARTMENT OF ENERGY

BROOKHAVEN NATIONAL LABORATORY
BROOKHAVEN SCIENCE ASSOCIATES

ISR Core Team

- Dennis Carlson, Mechanical Technician (as needed)
- Kenneth Evans-Lutterodt, Beamline Scientist (1 FTE/year)
- Cindy Longo, Mechanical Designer (~0.5 FTE/year)
- Mike Lucas, Mechanical Engineer (~0.8 FTE/year)
- Christie Nelson, Lead Beamline Scientist (1 FTE/year)
- *Zhijian Yin, Controls Engineer (WBS 2.04)*

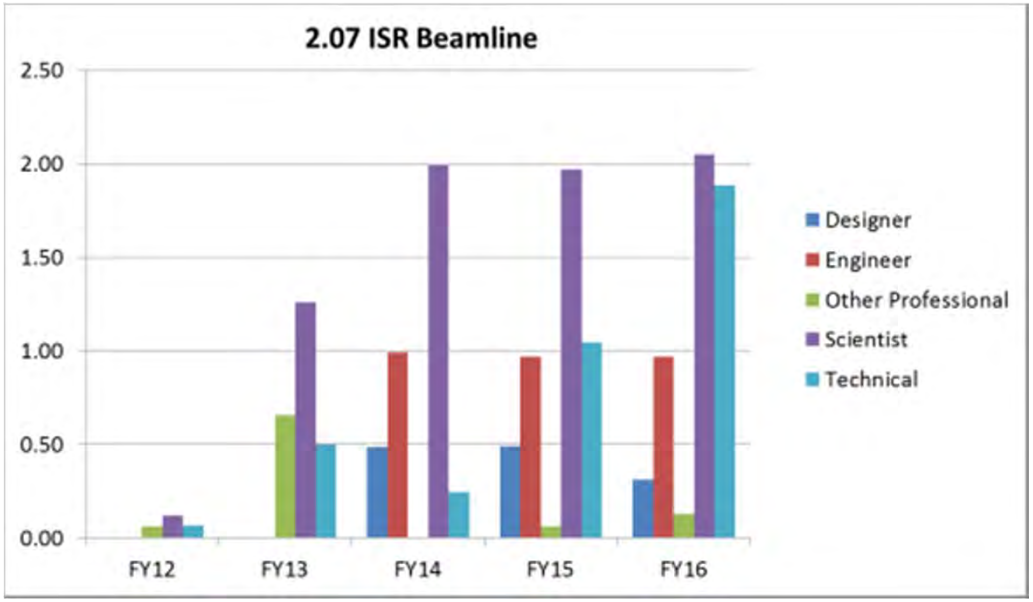

Note: In FY12-13, "Engineer" and "Other Professional" are combined, as are "Designer" and "Technical".

ISR Science Mission and Technical Scope

Requirements:

1) Resonant scattering with energies 2.4-23 keV, and ~10^{-4} $\Delta E/E$

2) Controllable incident polarization and polarization analysis

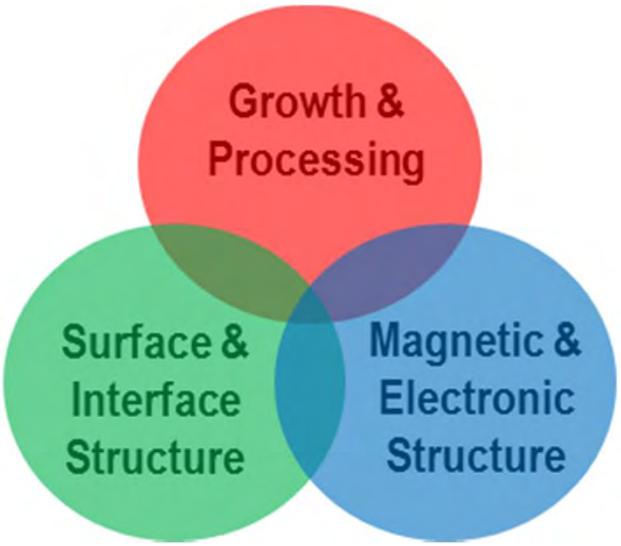

3) Microfocusing with large (~1 m) working distance

4) Highly flexible range of sample environments

5) Large area detectors

6) Provision for future expansion

Scope:

1) Si(111) DCM

2) Dual phase plate assembly and polarization analyzer

3) KB mirrors

4) 6-circle diffractometer, transferred base diffractometers, gas handling system, transferred displex cryostat

5) Eiger X 1M and transferred Pilatus 100K area detectors

6) Canted front end

subject of today's review

ISR Photon Delivery System

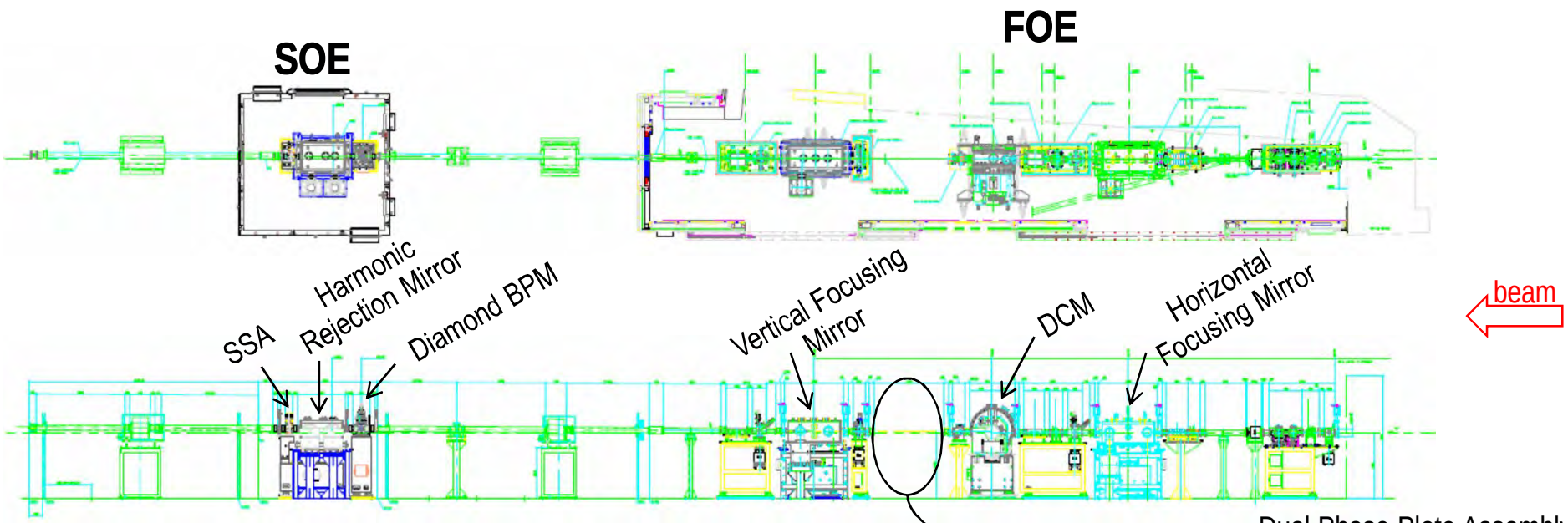

Dual Phase Plate Assembly

PDS components:

- In FOE, primary focusing mirrors, DCM, dual phase plate assembly, shielding, diagnostics
- In SOE, diamond BPM, harmonic rejection mirror, SSA

ISR Endstation Equipment

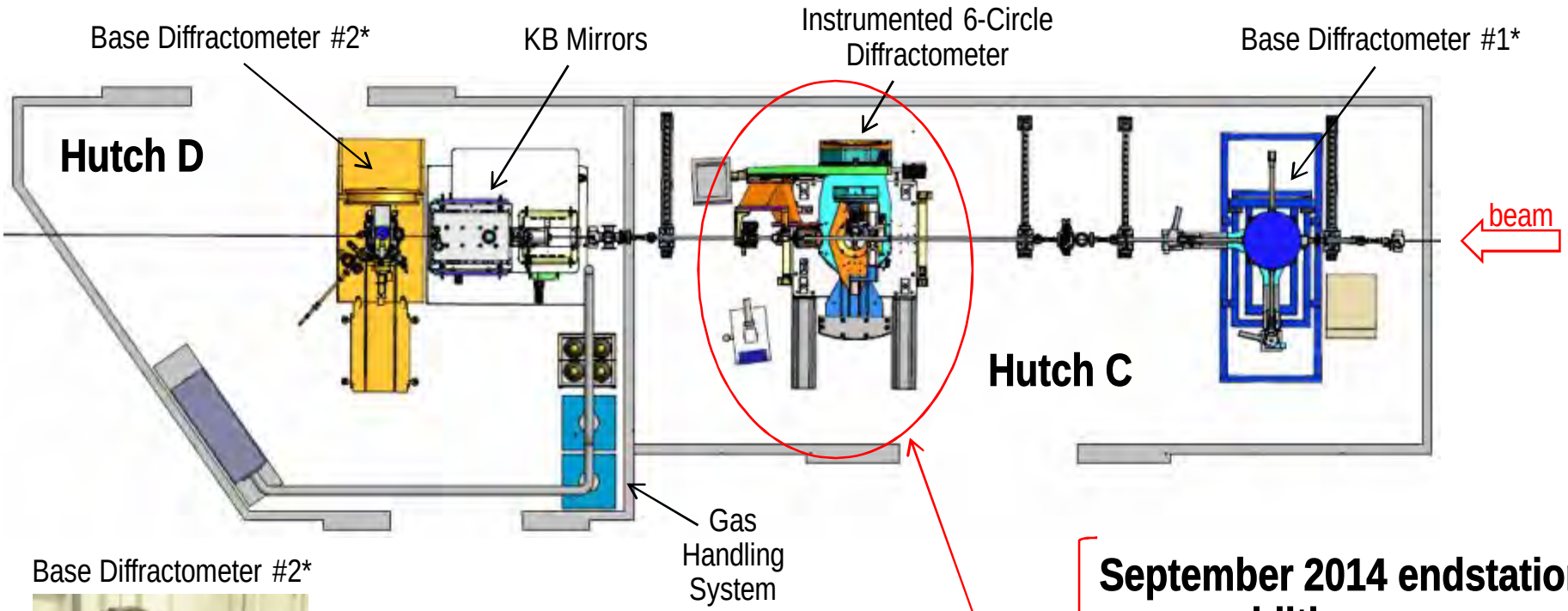

Base Diffractometer #2*

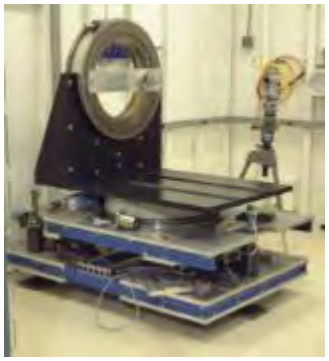

Base Diffractometer #1*

subject of today's review

September 2014 endstation scope additions:

- **Instrumented 6-circle diffractometer**
- **Pixel array detector**

*transferred from NSLS beamline X21

ISR Instrumented 6-Circle Diffractometer

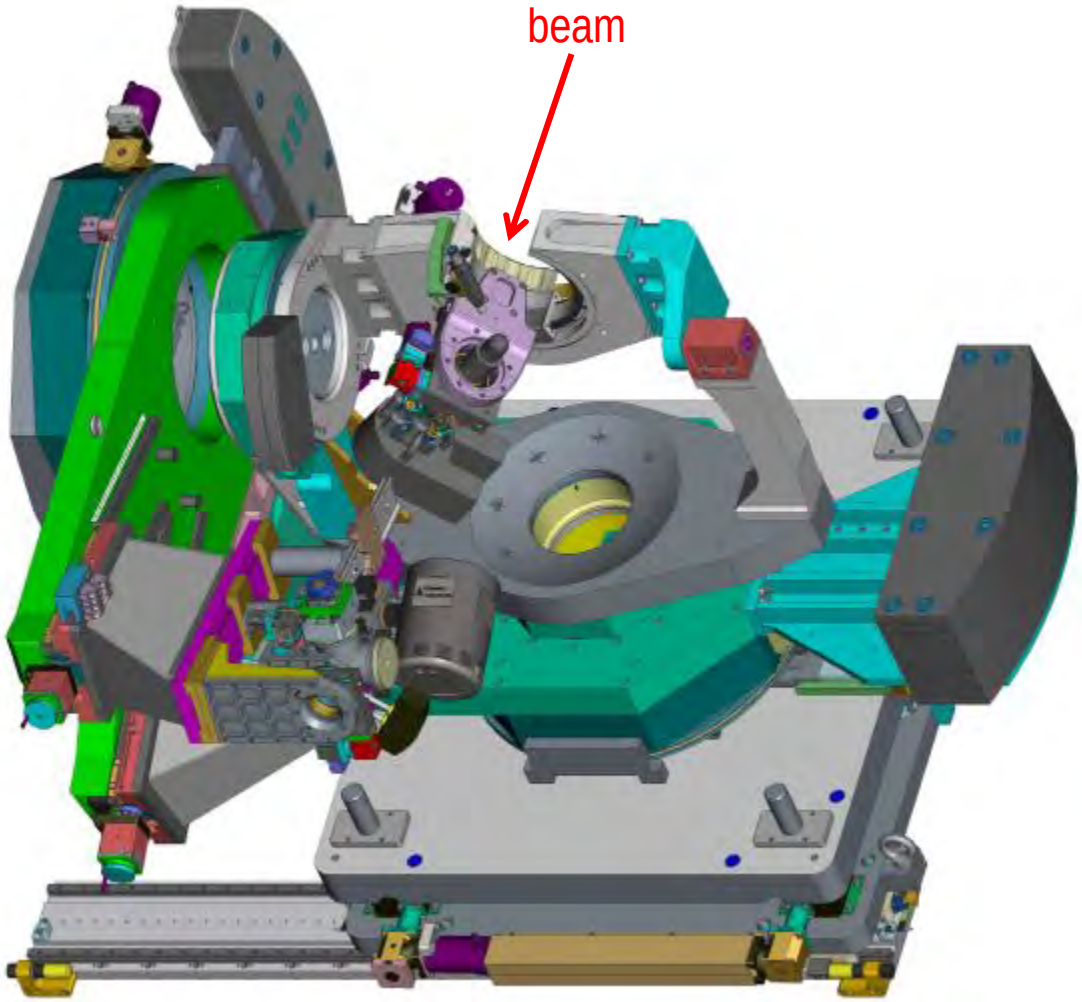

Contract awarded to Huber Diffraction on 3/27/15. Key capabilities include:

- Horizontal and vertical plane scattering
- Large accessible Q range (split χ)
- Dual 2θ arms for simultaneous mounting of point and area detectors
- Motorized displex mount
- In-vacuum polarization analyzer

Note: displex cryostat transferred from NSLS beamline X21

U.S. DEPARTMENT OF ENERGY
BROOKHAVEN NATIONAL LABORATORY
BROOKHAVEN SCIENCE ASSOCIATES

System Specifications

Table 3-1: Sphere of confusion performance specifications for maximum sample load and both the Polarization Analyzer and an area detector of maximum load mounted on the detector arm.

Parameter	Specification/Description
SSOC Diameter	≤ 30 µm
ISOC Diameter	≤ 60 µm

Table 4-1: System specification for Six-Circle Diffractometer.

Parameter	Specification/Description
chi circle opening	≥ 150 mm
phi circle offset	≥ 100 mm
detector arm length, from the center of rotation	≥ 800 mm
number of simultaneous detector mounts	2
maximum sample load	12 kg
maximum area detector load	4 kg

PROJECT ISR Instrumented Six-Circle Diffractometer			
1	NX-C-SPC-ISR-DIF-001	13Nov2014	Page 1 of 15
Version	Specification Number	Date	

Huber response:

The expected sphere of confusion for the sample circles with a goniometer head mounted with 12kg load on the Phi-circle shall be within 30µm. With a cryostat (weight about 12kg) mounted on the motorized cryostat carrier the sample sphere of confusion results in about 60µm because of the large lever arm effecting the xyz-translation, especially when the vertical theta rotation stage is moved to 90°.

The additional sphere of confusion of the combined 2Theta arm rotations is expected to be within 30µm.

6-Circle Diffractometer

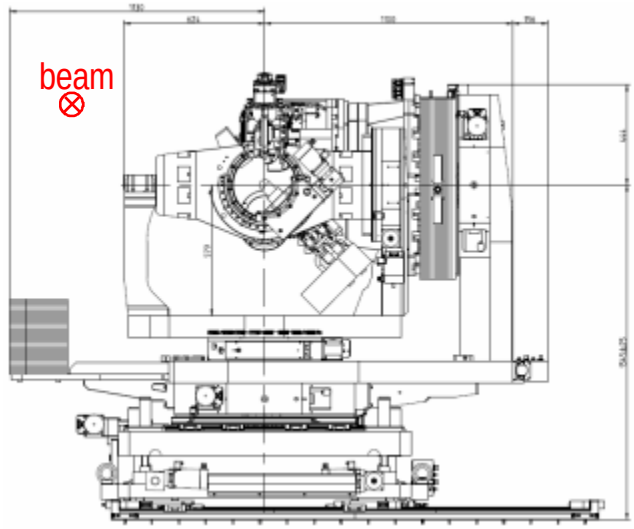

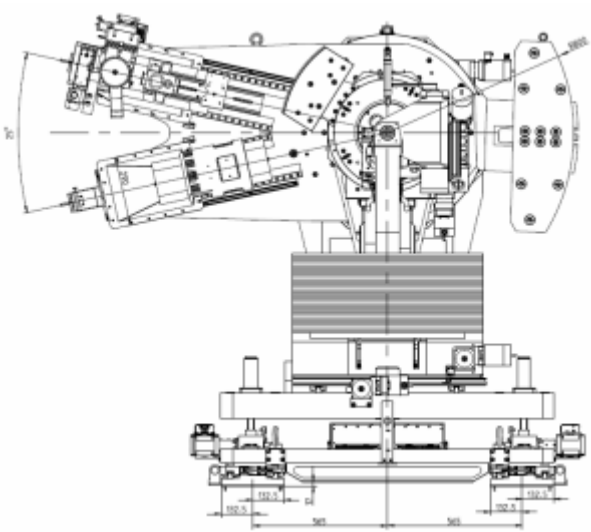

Table 4-2: Motion specification for Six-Circle Diffractometer.

Motion	Parameter	Specification/Description
vertical theta	Drive	motorized, with encoder
	Range	-10° to ≥ 90°
	Resolution	0.001°
vertical 2theta	Drive	motorized, with encoder
	Range (*)	-5° to ≥ 180°
	Resolution	0.001°
horizontal theta	Drive	motorized, with encoder
	Range	± 30°
	Resolution	0.001°
horizontal 2theta	Drive	motorized, with encoder
	Range	-10° to ≥ 180°
	Resolution	0.001°
chi	Drive	motorized
	Range	≥ 180° centered on 0°
	Resolution	0.001°
phi	Drive	motorized
	Range	full 360° rotation
	Resolution	0.001°
detector arm translation	Drive	manual
	Range (*)	≥ 200 mm
	Resolution	1 mm

(*) Required range for both mounts on detector arm.

Huber response: ***The Chi-range of 180° can only be reached without attachment of the cryostat.***

In-Vacuum Polarization Analyzer

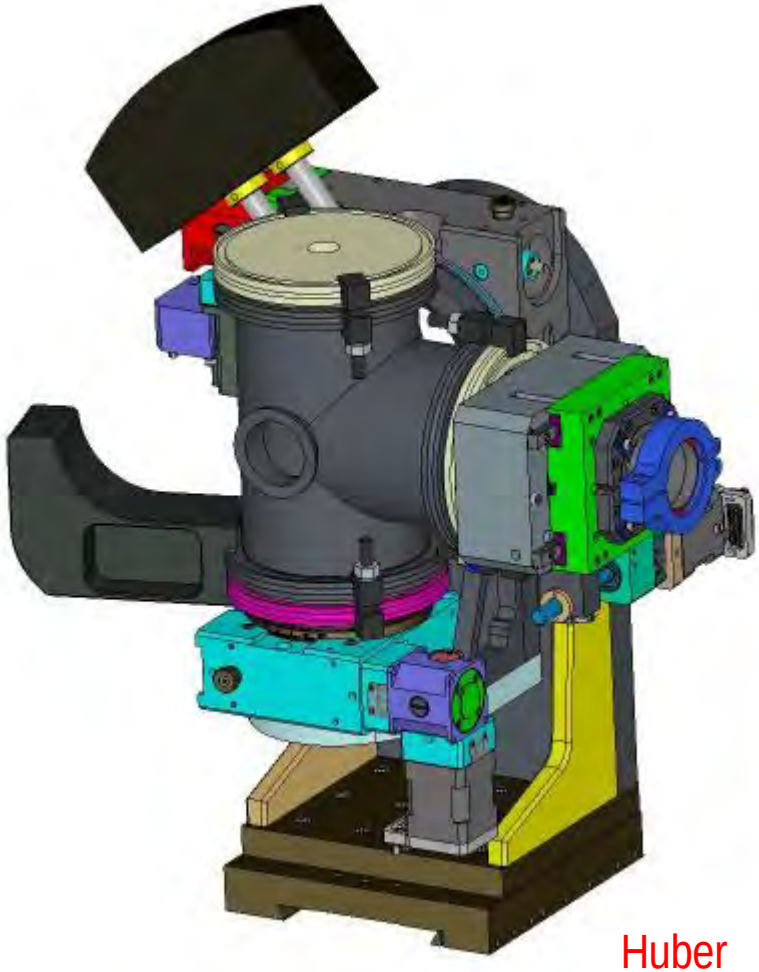

Table 4-4: Motion specifications for Polarization Analyzer.

Motion	Parameter	Specification/Description
analyzer theta	Drive	motorized
	Range	full 360° rotation
	Resolution	0.002°
analyzer 2theta	Drive	motorized
	Range	85° to 95°
	Resolution	≤ 0.05°
analyzer chi	Drive	motorized
	Range	full 360° rotation
	Resolution	0.002°
guard slits	Drive	motorized
	Maximum Aperture	≥ 4 mm x 4 mm
	Resolution	≤ 2 μm
detector slits	Drive	motorized
	Maximum Aperture	≥ 10 mm x 10 mm
	Resolution	≤ 2 μm

Huber response: ***The analyzer Chi range can reach the full 360° range only without detector. With detector mounted Chi is restricted to ca. 240°.***

In-Vacuum Slit Assembly on 2θ Arm

- Guard and detector slits with 2 μm resolution
- Guard slit aperture size: 4 mm x 4 mm
- Detector slit aperture size: 10 mm x 10 mm

Motorized Cryostat Carrier

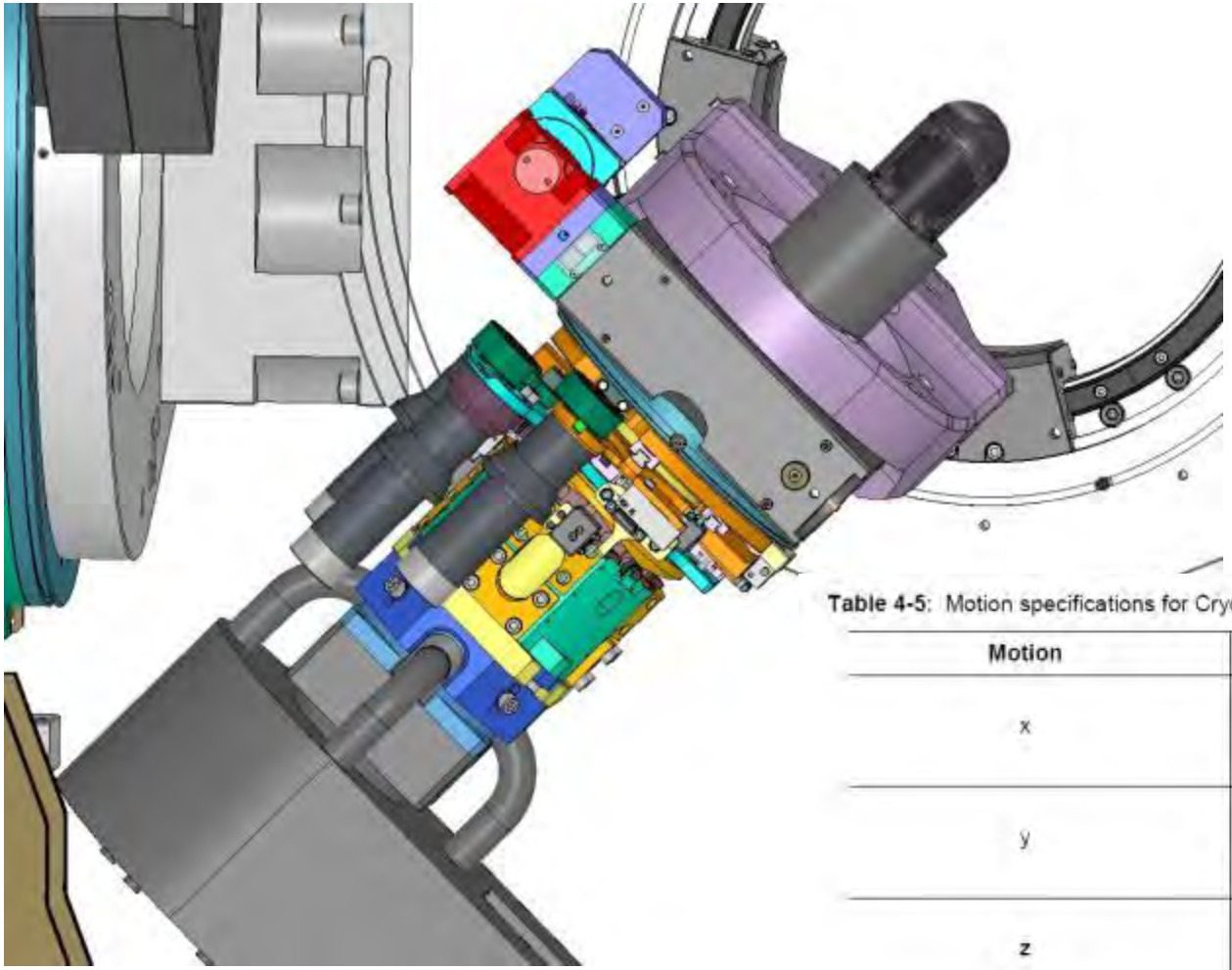

- Mount for existing ARS displex (6.5 – 350 K)
- Large phi offset allows 360˚ rotation with displex mounted
- Can be replaced by rod that supports a standard goniometer head

Table 4-5: Motion specifications for Cryostat Carrier.

Motion	Parameter	Specification/Description
x	Drive Range Resolution	Motorized ± 2 mm ≤ 0.5 μm
y	Drive Range Resolution	Motorized ± 3 mm ≤ 0.5 μm
z	Drive Range Resolution	Motorized ± 2 mm ≤ 0.5 μm

Diffractometer Table

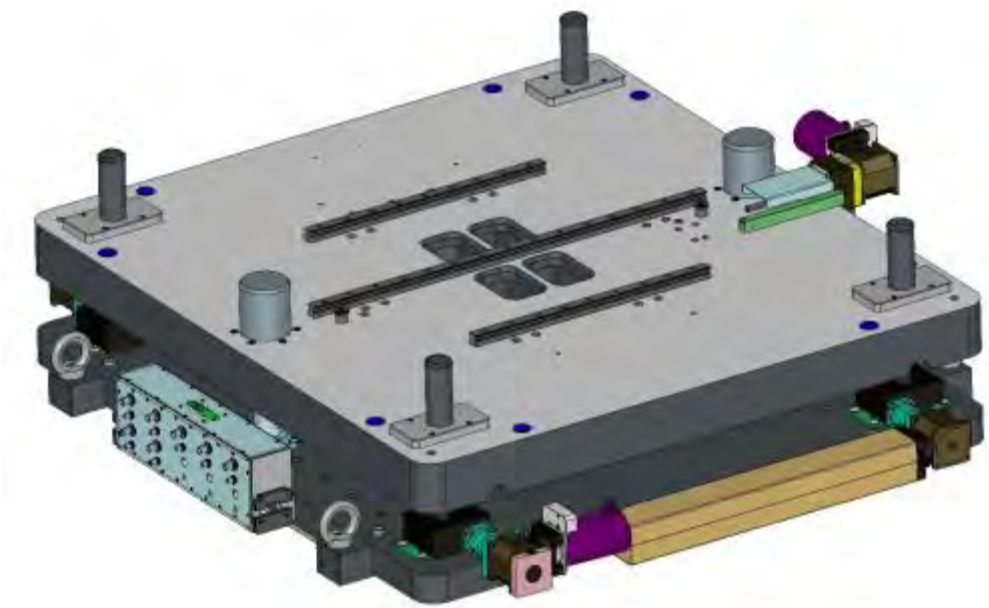

Table 4-6: Motion specifications for Diffractometer Table

Motion	Parameter	Specification/Description
pitch	Drive Range Resolution	Motorized ± 1.5° ≤ 0.001°
roll	Drive Range Resolution	Motorized ± 1.5° ≤ 0.001°
x	Drive Range Resolution	Motorized ± 25 mm ≤ 3 µm
y	Drive Range Resolution	Manual ± 25 mm 0.1 mm
fine y	Drive Range Resolution	Motorized ± 10 mm ≤ 3 µm

Huber response: ***The roll motion shall be manually only and be aligned initially during installation.***

Manual Translation Rails

Huber response: Two manual translation rails shall be bolted and levelled to the floor. After levelling the gap between the rails and floor will be sealed and finally filled with epoxy to have a perfect fit to the surface roughness to the floor. Two dampers at the end of the stroke prevent the diffractometer from a hard shock if pushed uncontrolled to the hard stop.

FDR Follow-up

The FDR for the Instrumented 6-Circle Diffractometer was held on July 10, 2015. Design modifications/additions discussed include:

- Increasing the maximum area detector load from 4 kg to 20 kg
- Refurbishing a standard analyzer 2-circle and modifying its height for the new 6-circle
- Adding encoders for chi and phi
- Increasing the 2θ range for the polarization analyzer to $\pm 8^{\circ}$ about 90°
- Adding a motor kill switch, to be mounted on diffractometer

We are waiting to receive the FDR Report from Huber and will evaluate their response, including cost increases.

Interfaces to Controls and Common Systems

- All diffractometer endstation motors are 2-phase stepper motors, wired according to NSLS-II specs
- All diffractometer motors include adjustable, mechanical limit switches and optoelectronic home switches
- Encoders are incremental Renishaw or Heidenhain systems
- Hutch C is equipped with adequate power for displex compressor, vacuum pumps, area detector, etc.
- Hutch C is equipped with gaseous nitrogen, compressed air, and a liquid nitrogen drop

ISR Pixel Array Detector

Dectris Eiger X 1M received on June 30, 2015, and successfully tested on July 16, 2015. Key specifications include:

- 75 x 75 μm^2 pixel size
- 450 μm sensor thickness
- 77 x 80 mm^2 active area
- Maximum frame rate of 3000 Hz
- Maximum count rate of 5×10^8 photons/s/mm^2

Conclusion

- The ISR Instrumented 6-Circle Diffractometer and Eiger X 1M pixel array detector will be a state-of-the-art, versatile endstation for x-ray scattering techniques such as:
  - Resonant x-ray scattering
  - Crystal truncation rod measurements
  - Reflectivity
  - Grazing incidence small-angle x-ray scattering
  - Grazing incidence diffraction
- The endstation will take advantage of the broad energy range (2.4-23 keV), polarization control, and high brightness of the ISR beam
- The endstation design is technically mature with minimal risks, and procurement is proceeding smoothly (FDR approval is expected ~2 months before baseline)
- ES&H issues have been addressed, and interfaces with controls and common systems are fully detailed
- The endstation will be ready for an IRR and successful operations after installation