NSLS-II 8-ID (ISS) Endstation Review

Meeting Date: April 21, 2015

The objective of this review is to assess the status of the NEXT endstation final design for the ISS beamline and its readiness to proceed to, or continue with, the construction phase. As of April 2015, most of the major endstation procurements are progressing and are expected to be awarded in the third quarter of FY15 and a number of smaller procurements and in-house design/build components remain to be completed. The review will identify any major residual design risks that must be mitigated prior to the start of full construction. It will also present an opportunity for support groups (Utilities, Safety Systems, Controls, ES&H, QA) to review the endstation designs as a whole and identify potential issues.

ISS (8-ID) Endstation Review Panel Charge Questions

1. Does the endstation's portion of the project performance baseline address the beamline's scientific program objectives? Yes - Based on the presented material the endstation meets the performance baseline. Is the endstation final design technically mature, sound, and likely to meet the performance expectations identified in the project performance baseline? Partially – However, there is an enormous amount of integration that is needed and some components of the design need to mature significantly. Optical alignment procedures for the spectrometer should be considered.

2. What are the major residual technical design risks, and are appropriate steps being taken to manage and mitigate these risks? Integration of the various components of the control system such as the "Pizza Box", FPGA units, connection of all the mechanical systems, maturity of subsystems designs such as sample holders and transfer system, and mechanical stability of the spectrometer, including how the baseplate will be supported.

3. Is the design effort consistent with the planned procurement/fabrication strategy and sufficiently mature to support procurement/fabrication of major components? The ISS "design effort is consistent with the planned procurement/fabrication strategy and sufficiently mature to support procurement/fabrication of major components.

4. What ES&H/QA issues and risks remain to be addressed, if any?

There are significant ESH risks but there are none that have not been identified.

No major QA risks were identified. Concern that engineers are constrained with preparing for the IRR. Refer to comments and feedback section for general QA comments.

5. Have the interfaces between endstation subsystems and Common Systems and Beamline Controls been identified and detailed sufficiently to support successful endstation construction? Identification of the interfaces was discussed however the level of details for the support for going into operations needs further refinement.

6. After construction and assembly, will this beamline's endstation(s) be able to sustain Instrument Readiness Review and lead to successful operations? Yes - The instrument design itself. However, ISS

needs to assure that all of the appropriate documentation is ready and unreviewed ESH issues have been resolved. Refer to comments and feedback section for general QA comments

Comments and Feedback:

In general a number of questions were asked by the review panel and attendees in regards to the design and operational feasibility of the endstation components based on the information provided in the presentation. Klaus and Eli provided responses to show how and why the system will work as intended as well as limitations of the system components. Such questions addressed the vacuum system requirements, exhaust of the gas handling system, stability of equipment, detectors, engineering and controls support, assembly of components, ordering of components, installation of the components, and ease of use of the end station equipment.

The reviewers provided additional comments and feedback below in the areas of scientific, engineering, ESH, QA, controls, vacuum, assembly/installation, and utilities. The ISS group should consider the feedback provided in the completion of the endstation design.

Scientific:

- It is clear that ISS will provide truly cutting-edge quick-XANES and quick-EXAFS capabilities. Required detection times per point have been thoroughly assessed. A comparable estimate of expected detection times for the XES and RIXS techniques was however not included in the Detector presentation. It is recommended that ISS works on these estimates, as they would help guide users in their choice of the spectroscopy technique (XAS/XES/RIXS) that best suits their needs.
- Although measurements of diluted species are given a strong emphasis in the scientific scope of the beamline, it is not clear whether XANES and EXAFS measurements in the partial fluorescence yield mode have been given any consideration. These measurements are achieved by monitoring the intensity integrated over a narrow energy window (determined by the total energy resolution) centered around the maximum of an emission line, which would be done using the Van Hamos or the SBA spectrometers, while sweeping the incident energy across an edge. Partial fluorescence detection has been proven particularly helpful to isolate a signal pertaining to a given element from the parasitic background of nearby element edges. Estimates of the throughput, which would be lower than the total fluorescence yield, would be good for the users to have when a choice has to be made between these two detection modes.
- It is not clear if all the EXAFS detectors will be usable at the same time, given the difference in background-to-peak intensity ratio in an absorption spectrum depending on the detection angle. It may not be easy to sum spectra with different intensity profiles.
- "Flat surface" samples are mentioned in the Overview slides, although no sample holder capable to accommodate such samples was presented in the Sample Treatment slides. Has such a holder been designed? The alignment of the spectrometers may require placing a strong scatterer in the beam, such as a piece of Plexiglas or scotch tape, which stresses the need to have a holder for flat samples available as soon as the spectrometer commissioning starts. Flat

samples also require a precise alignment of their surface with respect to the incoming beam and spectrometer focal points, which implies that a motion system for the sample, independent from the sample chamber and the frame for the multi-arm assembly, would be needed to properly handle flat-surface samples. Would the addition of such a motion system be feasible in terms of real estate and wiring capability?

Radiation-induced damages in chemical and biological samples are to be expected in the low-resolution mode with 10^{14} photons/s. This further stresses the need to implement a sample motion system independent from the sample chamber assembly, in order to raster the sample position during measurements and therefore limit the exposure time of a particular spot in the sample.

The instrument and complement of detectors it can support is quite impressive. To keep the instrument productive it will be important to consider the use cases for the instrument and the time required to modify configurations. If the time to change configuration is significant it may be important to work out the operations schedule to run experiments in blocks that use the same or similar configurations . This could result in an untenable constraint on the science productivity of the beamline so the team is encouraged both to evaluate the need for multiple configurations, and to the extent possible, design the instrument to make changeovers as rapid as possible.

The ISS team presented an ambitious integrated endstation design that will provide the user community with unique scientific opportunities relative to other X-ray spectroscopy beamlines world-wide. The system described clearly meets beamline scientific goals. Keep in mind that user community buy-in to the sample environment will likely require concerted communication on the part of scientific staff from ISS and Partner Users, as it is a departure from the very flexible environments seen at many other XAS beamlines. The apparent restriction to LN_2 cooling in the initial stages of operations is concerning. The lack of LHe temperature capability will be scientifically limiting for users examining superconducting materials or coordination complexes that undergo low temperature spin state transitions. In addition, the biological X-ray spectroscopy community has grown to expect LHe temperatures for XAS, principally to minimize radiation damage and vibrational effects. The flux and detection capabilities of ISS will likely ameliorate radiation damage concerns for this community, particularly with well-chosen demonstration experiments. However there are cases where sub-77K temperatures are scientifically justified and required. Will LHe consumption rates preclude occasional use of 100L LHe dewars for experiments that require ultra-low temperatures, even if costs are passed on to users? The ISS team, and indeed the facility as a whole, should explore options for He recovery and liquefaction from endstation cryostats.

The concept for a nearby sample preparation and characterization support laboratory with access to the gas handling will help optimize the scientific productivity of the ISS beamline. It helps provide prepared samples to the beamline at a rate commensurate with its high throughput for some types of studies. The sample transfer module concept presented was fairly preliminary in nature. Given its state of development, it may be beneficial to consider the capabilities for the transfer modules.

In some cases it may be appropriate to simply have a vacuum or inert atmosphere storage. For other situations, particularly sample aging studies, it might be useful to include capabilities for heating,

cooling, or potentially some types of continuing reactions in these transfer/storage containers. This might relieve some pressure from the glove boxes in the sample preparation area as well as allowing users (particularly industrial users) to have their own 'pre-loaded' storage cells to send to the beamline. This might require some attention to how the samples are secured in the storage module, as the benefits of gravity and 'normal' sample orientation may not always be in force when shipping these containers. Such a provision might even prove useful for moving samples from the lab to the beamline against the unlikely event of a dropped sample transfer container.

Engineering:

Sample Chamber:

Dedicate engineering support to conceptualize the design of the internal environment of the sample chamber early in the procurement phase of the spectrometer support structure to plan and manage the procurement, and assure delivery is on track for planning for the IRR or equivalent for the endstation.

Spectrometer Support Structure:

The design of the spectrometer support structure has integrated flexibility for interchanging the 20 SDD, 2 SBA and 2 Van Hamos analyzer systems. The spectrometer support structure should include provisions for precisely mounting the pre-aligned spectrometer unit to the support frame in any orientation. Design in lift points and develop plans for procedures to manage the installation of the heavy components. The versatility in configuration should not be hindered by limited clearance of surrounding instruments (i.e. electronics rack). The alignment of each of the components to the sample environment is not trivial and requires careful consideration in the design of the support and the mounting scheme for each component.

The hexapod load capacity is marginal to the sample chamber, spectrometer support structure and detector systems in the current design. An early decision to incorporate a hexapod with higher load capacity will allow for the flexibility of the sample environment as intended without compromise to the design and will avoid delays in the deliverables from the various vendors involved in the endstation procurements. [Note – since the time of this review, the higher-load-capacity hexapod upgrade has been implemented]

Sample Handling:

Access will be challenging to resolve improper mounts to the gas connections between the sample holder carrier, sample holder base and the interface plate using the automated sample mounting system due to the spectrometer support structure surrounding the chamber with an estimated 400 mm reach to the sample location at the center of the chamber. The design concept is ambiguous for locating the sample carrier from the sample tray into the sample holder base prior to moving it to the measurement position. Designing in feedback to confirm proper coupling at gas connections may be of interest in the

automation cycle. Moving rapidly to design and prototype for proof of final design will minimize the percentage of failure.

Detector Capabilities:

Waiting for the completion of the PDR's for the chamber, spectrometer, and the final cryostat design before starting the design the XAFS Z-1 filter system may result in unforeseen constraints and could affect the schedule for the lens/Soller slit purchase.

ESH:

There are considerable ESH considerations with this experiment set-up. The gas system has been extensively reviewed, and accepted by the SMEs in SHSD and Fire Protection, and will be on emergency power. Other considerations:

- There are several Beryllium windows. These need evaluation and approval from SHSD prior to use.
- The inventory of hazardous gas will need to be carefully managed to ensure maximum quantities are not exceeded for the entire facility, which is considered one Control Area for fire protection purposes. Also, the procedure for changing out toxic gas cylinders needs to be considered, who will perform them and what controls will be needed.
- The laser system will need review
- A barrier or administrative controls will be needed when operating movable components to prevent pinch points and ergonomic hazards
- The sample preparation area will need review for requirements and utilities such as fire detection/sprinklers, eye wash and safety shower, and compatibility/segregation of proposed sample materials.

QA:

Design review(s) for A1/A2 equipment needs to be completed, documented, and actions closed. A top level traveler that verifies installation/commissioning readiness needsto be developed and executed. Operating procedure/manual needs to be developed and personnel trained on it. All these items need to be completed prior to an IRR.

Controls:

Software integration of the beamline optics and endstation alignment to produce a user-friendly data acquisition system will require significant effort and testing during commissioning and operations. A key element of this is data visualization to facilitate rapid decision making by users, e.g., recognition of radiation damage so the user doesn't collect unpublishable data. ISS may break new ground for X-ray

spectroscopy beamlines in this area, given the planned short duration of beamtime compared to what users are used to. To some extent this appeared underappreciated as an area that requires a substantial commitment of resources and time. That said, the ISS team is taking appropriate steps to reach out to members of the user community with interests in this area (Ravel, Newville, others), and they are looking for input from other NSLS-II beamlines facing similar issues such as CSX or FMX/AMX.

Vacuum:

I have made some comments for both the Spectrometer Chamber and the Sample Handling based on the presentations. There were limited vacuum details presented, due in part to the large scope of material presented and I would encourage a dedicated review of the overall endstation vacuum requirements and design in the near future.

The use of Kapton insulated wire in vacuum sections, particularly those that see white and pink beam, should be carefully reviewed. The specifications of the wire used in these sections, as well as all sections of beamline, should be carefully looked at to determine if fluorocarbon binders are present within the makeup of the Kapton cable. Appropriate steps should be taken to eliminate such material.

Spectrometer Chamber Vacuum:

It would be beneficial to generate vacuum specification(s) for the required vacuum level, bakeout requirement (if any), gas throughput, pumping and venting requirements for the Spectrometer chamber so the proper gauges, pumps, end station RGA and valves can be identified. A few comments on the seal chosen for the chamber spectrometer ports: If elastomer seals can reduce the quality of scientific measurements, or elastomer can be degraded by chamber processes, then metal seals should be considered and investigated. If suitable aperture can be achieved by opening a Conflat bore fully to the knife edge, then aluminum Cefix seals (EVAC AG) could be a suitable seal (with elastomer quad rings as an optional seal compatible with the Conflat geometry). If the o-ring solution is chosen, caution should be taken in the o-ring groove design so as to prevent gas trapping and virtual leaks. Helicoflex seals can be used as a potential all metal option compatible with certain o-ring groove geometry and should be considered during the design of the groove.

Sample Handling Vacuum:

The Sample Handling and Exchange plan was shown in concept only and no vacuum system details for the sample handling and transfer were presented. While the overall mechanical transfer plan appears sound in principle, there is significant vacuum engineering work to design and test such a system. It is not clear to what level hazardous gases would breach into the vacuum during normal operation, or in the event of vacuum seal failure, or if a plan for containing gases in the event of overpressure of the Sample Handling or Spectrometer vacuum has been developed. Controls and level of automation need to be defined along with appropriate vacuum interlocks for defined pumping and venting sequences. The design needs to facilitate retrieval of dropped or “stuck” samples and impulse actuated valves need

to be incorporated so valves do not close on transfer mechanisms during power loss. A dedicated end station vacuum PLC may be appropriate, such as is being done on other beamlines. Prototyping and testing the transfer mechanism for function and vacuum integrity need to be done and a simplified "day one" plan for introducing a sample should be considered. The interim steps in developing, testing, and building such a system are not trivial and need to be identified so a baseline schedule for completion can be generated. It also appears that significant "off-beamline" preparation will be done in laboratory space that will require vacuum processes (i.e. pumping, leak checking, RGA, etc.). These vacuum needs will need to be identified along with the appropriate design and safety reviews.

Assembly/Installation/Utilities:

The assembly sequence and servicing for this complex instrument remains a concern. While the hutch looks spacious, the instrument will fill it up very quickly and the space required to extract a spectrometer, detector, or analyzer could be significant. It might be worth considering developing the design for tooling to aid in the extraction of these components without requiring significant disassembly involving other components that do not require servicing.

Review Committee members:

M. Buckley (Chair)
Ignace Jarrige (Science)
Erik Farquhar (Science)
Erik Johnson (Science)
Mary Carlucci-Dayton (Engineering)
Lori Stiegler (ESH)
Robert Todd (Vacuum)
Joseph Zipper (QA)

Attendees:

Refer to attached attendance sheet.

8/28/2015

X

Michael Buckley
Research Operations Support Group Leader
Signed by: Buckley, Michael

Agenda and Charge for ISS (8-ID) Endstation Review

Date: 21st April 2015

Location: Bldg. 745 rm 156

The objective of this review is to assess the status of the NEXT endstation final design for the ISS beamline and its readiness to proceed to, or continue with, the construction phase. As of April 2015, most of the major endstation procurements are progressing and are expected to be awarded in the third quarter of FY15 and a number of smaller procurements and in-house design/build components remain to be completed. The review will identify any major residual design risks that must be mitigated prior to the start of full construction. It will also present an opportunity for support groups (Utilities, Safety Systems, Controls, ES&H, QA) to review the endstation designs as a whole and identify potential issues.

Time	**ISS (8-ID) Endstation Review**	**Speaker**
8:30-8:45	Executive Session (Review Panel)	
9:00-9:15	Introduction	S. Hulbert
9:15-9:45	ISS overview	K. Attenkofer
9:45-10:15	ISS detection system	K. Attenkofer
10:15-10:30	Break	
10:30-10:45	ISS Sample Handling	E. Stavitski
10:45-11:15	Sample treatment	E. Stavitski
11:15-12:00	Infrastructure (walk through)	K. Attenkofer
12:00-13:00	Executive Session (Review Panel)	
13:00-13:30	Close Out Session (Review Panel and ISS Team)	

Review Panel:
M. Buckley (Chair)
Ignace Jarrige (Science)
Erik Farquhar (Science)
Erik Johnson (Science)
Mary Carlucci-Dayton (Engineering)
Lori Stiegler (ESH)
Robert Todd (Vacuum)
Joseph Zipper (QA)

The Review panel will address the charge questions during the 12:00-13:00 Executive session and then discuss the responses to these questions with the ISS team during the close out session. Following the review, a report will be developed addressing the charge of the review panel listed on the following page. The review panel chair will organize the preparation of this report. Comments are welcomed by the attendees during the review.

ISS (8-ID) Endstation Review Panel Charge Questions

1. Does the endstation's portion of the project performance baseline address the beamline's scientific program objectives? Is the endstation final design technically mature, sound, and likely to meet the performance expectations identified in the project performance baseline?
2. What are the major residual technical design risks, and are appropriate steps being taken to manage and mitigate these risks?
3. Is the design effort consistent with the planned procurement/fabrication strategy and sufficiently mature to support procurement/fabrication of major components?
4. What ES&H/QA issues and risks remain to be addressed, if any?
5. Have the interfaces between endstation subsystems and Common Systems and Beamline Controls been identified and detailed sufficiently to support successful endstation construction?
6. After construction and assembly, will this beamline's endstation(s) be able to sustain Instrument Readiness Review and lead to successful operations?

The committee is requested to present their findings, comments, and recommendations at the conclusion of the review, and to send a report to the NEXT project director within three weeks of the conclusion of the review.

Buckley, Michael

Subject:	ISS (8-ID) Beamline Endstation Review - NSLS-II (Review Panel)
Location:	Bldg. 745 Rm 156
Start:	Tue 4/21/2015 9:00 AM
End:	Tue 4/21/2015 1:30 PM
Recurrence:	(none)
Meeting Status:	Meeting organizer
Organizer:	Buckley, Michael
Required Attendees:	Jarrige, Ignace; Johnson, Erik D; Farquhar, Erik; Carlucci-Dayton, Mary; Stiegler, Lori; Zipper, Joseph; Todd, Robert J; Hulbert, Steven; Keister, Jeffrey; Morello, Eileen; Attenkofer, Klaus; Stavitski, Eli

Updated Agenda and panel attached. Reminder that lunch will be provided to the review panel.

You are being invited to this review to assess the status of the ISS (8-ID) endstation to assess the status of the final design for the ISS beamline and its readiness to proceed to, or continue with, the construction phase. This review will include both scientific and engineering elements.

An agenda is attached and additional supporting documents will be provided to you shortly.
Review Panel:
M. Buckley (Chair)
Ignace Jarrige (Science)
Erik Farquhar (Science)
Erik Johnson (Science)
Mary Carlucci-Dayton (Engineering)
Lori Stiegler (ESH)
Robert Todd (Vacuum)
Joseph Zipper (QA)

Thank you,

Agenda and Charge for ISS E...

Mike

NSLS-II
8-ID (ISS) Endstation Review
Attendance Sheet

Date: April 21, 2015

Name	Title	Department/Division or Company
Mike Buckley	Res. Ops. Support Grp Ldr.	NSLS-II
ERIK FARQUHAR	BL Scientist	CWRU
ROBERT TODD	BL VACUUM	NSLS II
Jeff Keister	deputy PM	NSLS-II
Ignace Jarrige	Physicist	NSLS-II
ERIK JOHNSON	Dep Dir For Cons	NSLS-II
Lori Stiegler	ESH	NSLS-II
Steve Hulbert	NEXT PM	"
Mary Carlucci-Dayton	Beamline Engineering Group Leader	NSLS-II
JOE ZIPPOR	QA	NSLS II
Kevin Kirshenbaum	Post doc	Energy Sciences Directorate
Eli Stavitzki	ISS BC scientist	NSLS II
Klaus Attenkofer	CAM	NSLS II
MICHAEL SULLIVAN	BL ENGINEER	CWRU
Zhijian Yin	Controls	NSLS-II

Inner Shell Spectroscopy Beamline: Overview: Endstation Design

Klaus Attenkofer
Level 2 Manager for ISS Beamline
Endstation Review
April 21, 2015

U.S. DEPARTMENT OF ENERGY | Office of Science

BROOKHAVEN NATIONAL LABORATORY
BROOKHAVEN SCIENCE ASSOCIATES

Outline

- The review: Goal and Context
- ISS: A high flux spectroscopy beamline concept
- Timeline: The ISS project overview
  - Major components
  - Procurement and development
  - Interfaces with other groups
- Base line: The main components

The Review: Goal and Context

Charge Questions:

1. Does ISS provide the necessary tools required to address the beamline scientific objectives:
   - Is the endstation final design mature/sound?
   - Is it likely to meet the performance expectations?
2. What are the major technical design risks and is there a mitigation plan?
3. Is the design effort sufficient to allow procurement?
4. Any ES&H/QA issues and how they are addressed?
5. Are there any interface issues between subsystems, Common, and Controls: Identification and mitigation.
6. Is everything planned for a successful Instrument Readiness Review (or equivalent review)

The Review Process:

Charge Questions:

1. DOE Project review:
   - ✓ CD0:
   - ✓ CD1:
   - ✓ CD2:
   - ✓ CD3:
   - • CD4:

   Each review had 3 reviews (internal review, an external preview (site visit), and a external review (site visit))

2. Final Design Review: 2 day review with 6 reviewers
3. BAT meetings with recommendations (typically 1.5 days)
4. **Endstation review**

The Beamline Advisory Team:

The Beamline Advisory Team:		
Function/ Represent	Name	Institution
Chair	Bruce Ravel	NIST
Bio Catalysis	Serena DeBeer	MPI (Bioanorganische Chemie)
X-ray Spectroscopy	Bruce Bunker	University of Notre Dame
General Optics	Andy Dent	Diamond
Industrial Research	Shelly Kelly	UOP
Catalysis	Jose A. Rodriguez	BNL
Spectrometers	Jerry Seidler	University of Washington
Material Sciences	Joseph Woicik	NIST

- Meets 1x per year for 1.5 days
- Talks and reports are archived

The Final Design Review:

The members of the committee:

- Chair: Bruce Ravel (BAT chair)

Reviewers	Responsibility
Andrew Dent (Diamond)	Procurement Strategy and Document review of PDS & Radiation Shielding
Mary Carlucci-Dayton (NSLS-II)	Ray Tracing & Traceability
Katarina Noren (MAXLAB)	End Station Layout and Auxiliary Characterization
Gerald T. Seidler (University of Washington)	Detection System and Sample Environment
Charles Kurtz (APS)	Beamline Installation: Timeline & System Integration
Robert Sabatini (CFN)	Gas Handling System and Safety Concept

- Additional Experts:
  - Wah-Keat Lee: Radiation safety (BNL)
  - Lori Stiegler: Safety (BNL)
  - Andrew Broadbent: Interface Manager & enclosure (BNL)
  - Chris Stebbins: Installation coordinator (BNL)
  - Yin Zhijian: Controls (BNL)

Beamline Key Performance Parameter (KPP)

- What is a KPP:
  KPP defines the deliverable which defines success of the project:
  - Threshold KPP: The minimum deliverable at the end of the project
  - Objective KPP: The deliverable is consistent with design goal
- The beamline specific KPP:
  - Delivering a working end station with XAFS fluorescence detection, and emission detection system (both KPP's are identical).
  - **Table 2.1 – Key Performance Parameters at Project Completion**

Performance Measure	Threshold KPP	Objective KPP
Synchrotron flux value measured at an endstation position of ISS*	2×10^{12} photons/s	2×10^{13} photons/s

* Prerequisites for measurement of synchrotron flux: operation of the NSLS-II storage ring at a current > 25 mA with beamline shutter enabled, insertion device and front end installed and operational, with all required safety systems approved and operating. Flux values correspond to NSLS-II ring operation at 500 mA and will be scaled linearly to the actual current value at the time of measurement.

The Review Report (recommendations) should address only the KPP's

Scientific Program

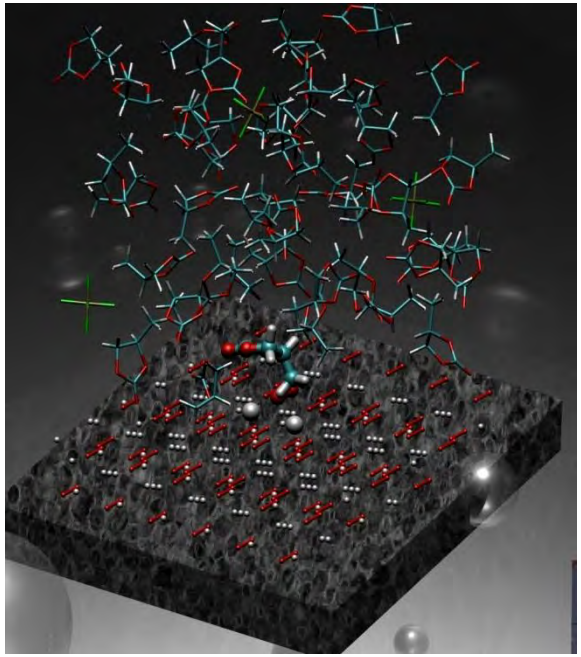

DOI: 10.1002/chem.201103057

Scientific Goal of ISS:

Investigating correlations between structure, chemical composition and functionality in

"Real Worlds Materials and Under Realistic Environment"

Experimental Challenge:

1. Complex multiphase materials with partial/none long range order
2. In-operando conditions are different from steady-state
3. Satisfying both communities:
   Applied/industrial and basic sciences community

The ISS-Approach:

1. Increase the detection limit to 1μmol/L (ppb-level)
2. Develop and provide spectroscopic tools with increased chemical sensitivity
3. Increase throughput to serve not only a large community but also to allow combinatorial approaches

DESIGN GOALS: TECHNICAL SCOPE (PHOTON DELIVERY SYSTEM)

1. Energy Range and Scanning Conditions

- Energy Range: 4.9KeV-36KeV (CDR: 5-40KeV)
- Photon Flux larger $2x10^{13}$ Photons/s in the energy range 4.9KeV-22KeV
- High ($\Delta E/E=1x10^{-5}$) and medium ($\Delta E/E=1.5x10^{-4}$) resolution mode

2. Spot Size at Sample Position

- Standard: $2000x500\mu m^2$ (used for flux specifications)
- For spectrometer applications $25x25\mu m^2$ (in sample environment integrated poly-capillary optics with 20%-25% efficiency)

DESIGN GOALS: TECHNICAL SCOPE (ENDSTATION)

1. Detection System

- Conventional spectroscopy (CDR: multi-element detection system):
  - Can Handle 10^{12}Photons/s
  - > 5% efficiency (solid angle coverage & detection efficiency)
- Spectrometer
  - Resolution: $\Delta E/E=1x10^{-5}$ to $\Delta E/E=1.5x10^{-4}$
  - Efficiency: >1%
  - Easy to change energy/ user-friendly operations

2. High Throughput and Sample Handling

- Geometry: capillary, flat surface, or user defined
- Sample temperature: 4K-800K
- Sample atmosphere: 10^{-5}mbar and 2bar various gas-atmospheres
- Sample transfer fully automatically.

Any comments which don't concern KPP's but are important to design goalsshould be summarized in findings section of the the Review Report.

OPERATION OF THE BEAMLINE

- **Typical beamtime**
  - Typical duration:
    - 2-3 day stay
    - off-line preparation: ~2 days (getting sample going)
    - Beam time: typically 8-24 hours
  - Access: visit or mail-in
- **What is allowed to the user**
  - Independent change of energy range (without beamline personal)
  - Energy change of the detection system
  - Creating processing protocols within the envelope of the beamline
  - Accessing raw data and analysis software from home institute
- **Which communities will be mainly served**
  - Catalysis
  - Battery
  - Bio-EXAFS
- **Support: ISS team & external support organizations (partner users)**

THE BEAM DELIVERY SYSTEM

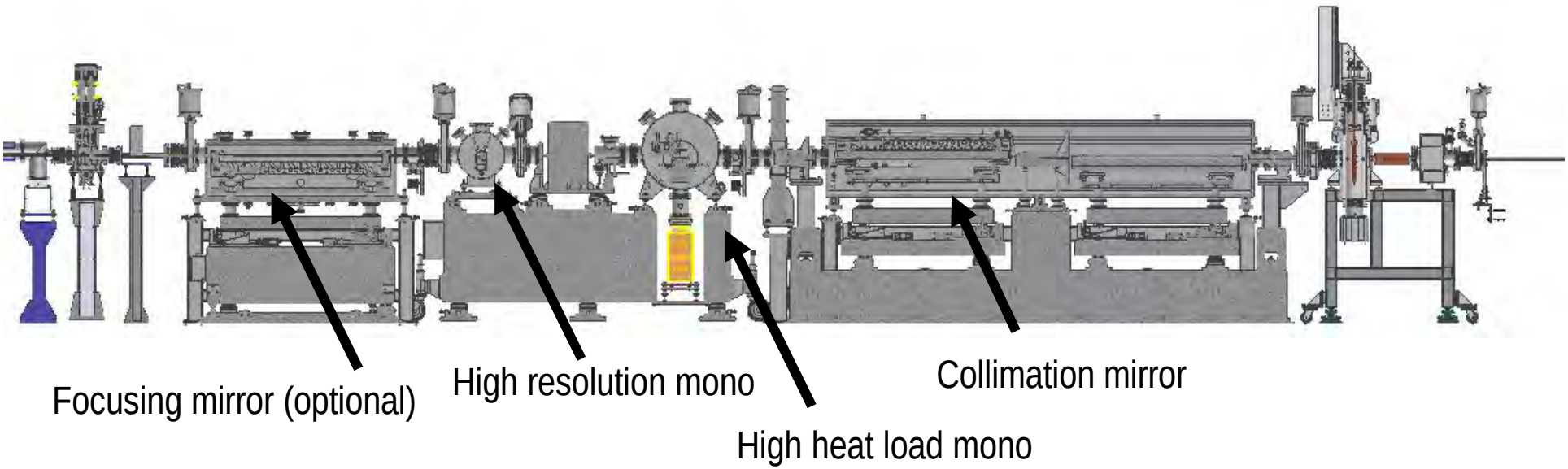

- **Mirror Concept:**
  - Collimation and high heat load mirror will be always used
  - Focusing mirror can be removed
  - Beam will be either 1x1mm^2 or 80x3mm^2
- **Mono Concept**
  - High heat load mono: LN2 cooled Si111
  - High resolution mono: Si220 or Si511 channel cut (optional)
  - Fast scanning capability: >10Hz (for both options)

Should allow fast change of energy range (<1min)

MODES OF OPERATION AND SPECIFICATIONS

Performance in full heat load mode:

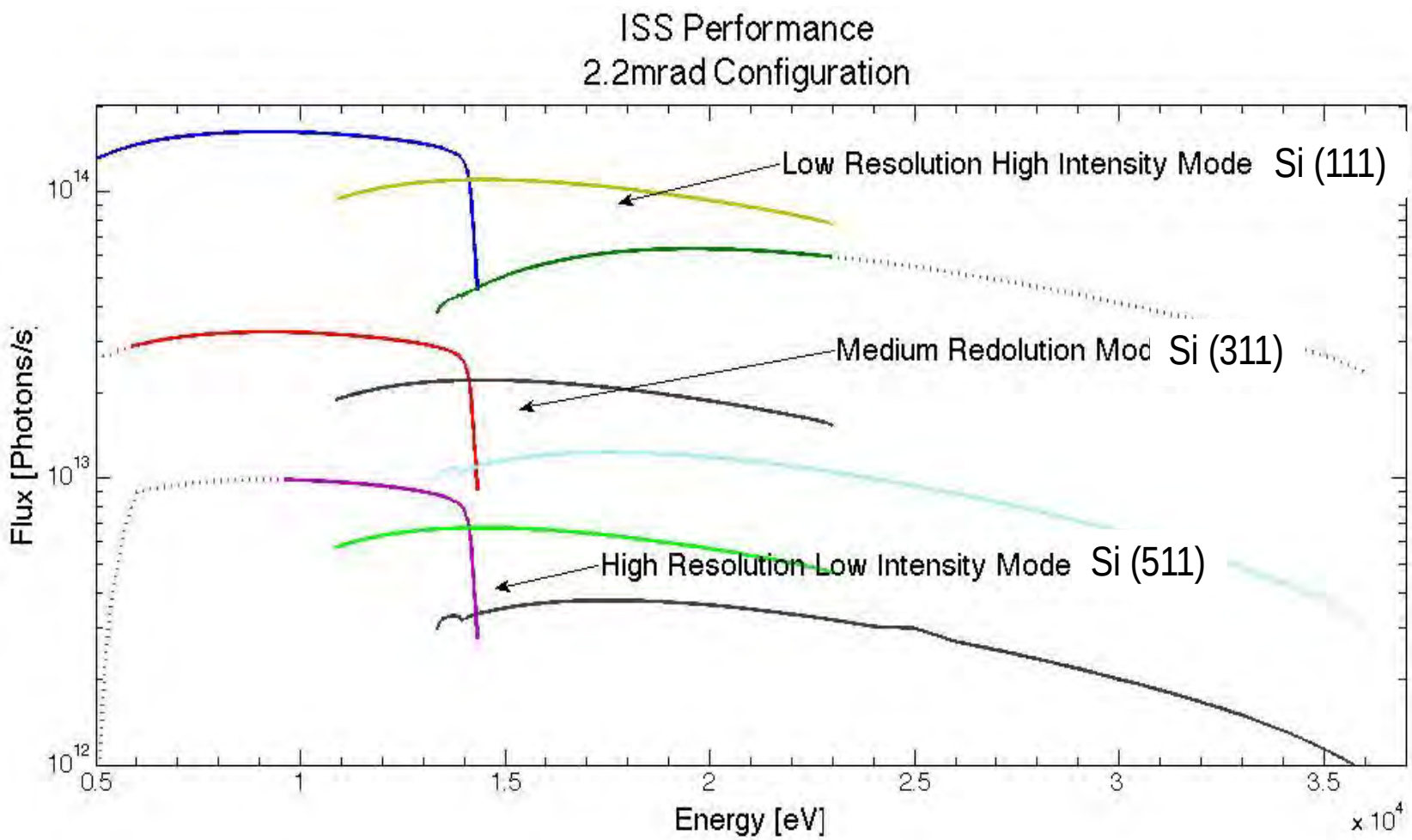

ISS Layout

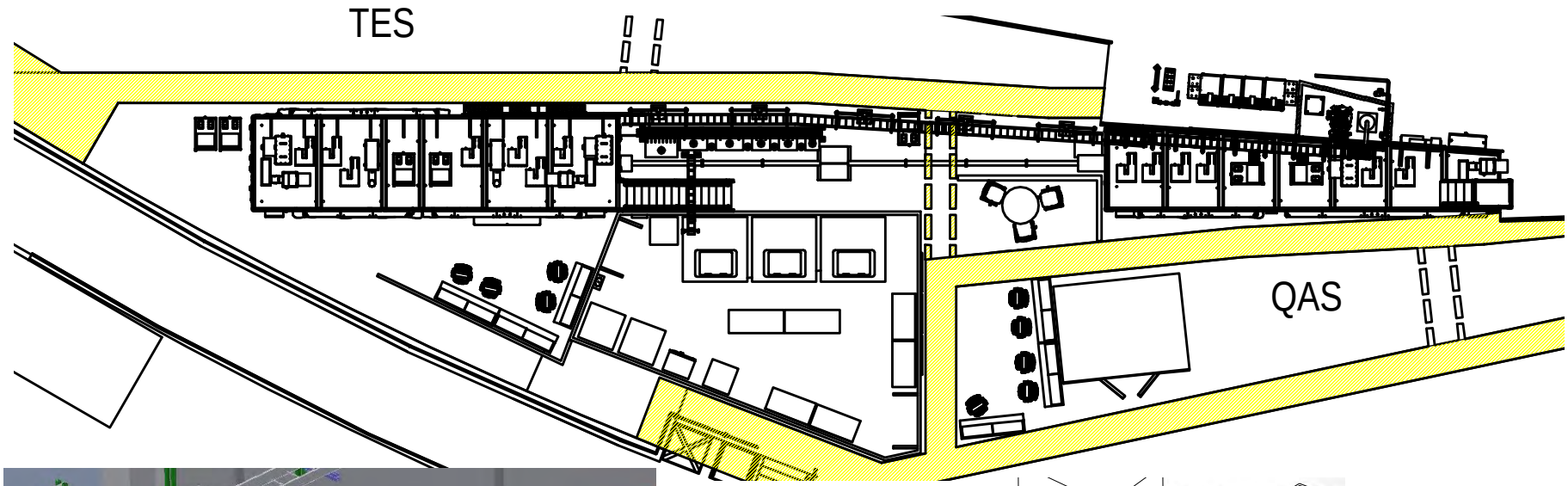
TES
QAS

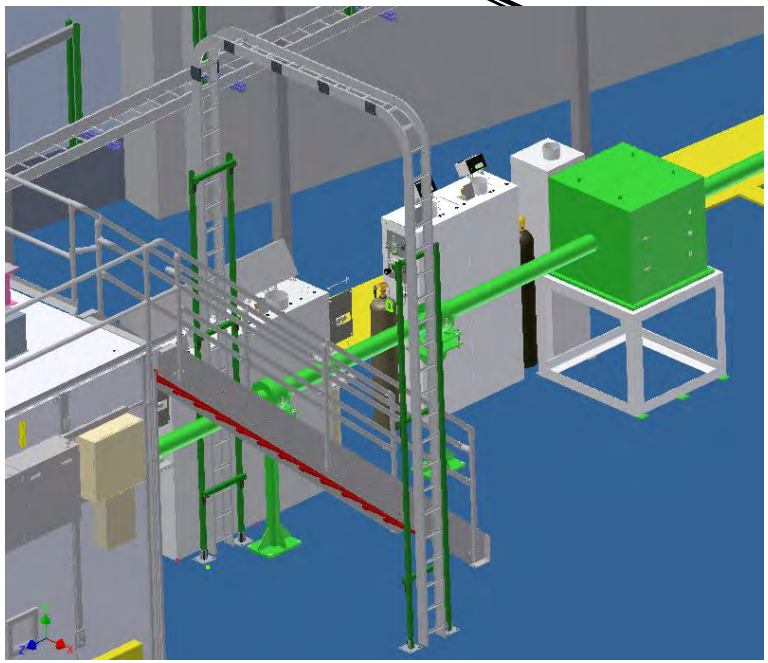

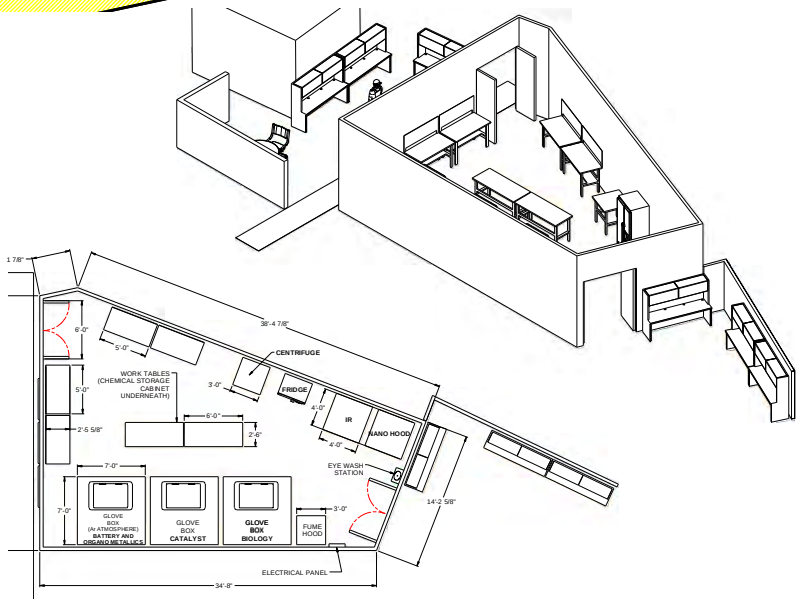
CENTRIFUGE
WORK TABLES (CHEMICAL STORAGE CABINET UNDERNEATH)
FRIDGE
IR
NANO HOOD
EYE WASH STATION
GLOVE BOX (At ATMOSPHERE) BATTERY AND ORGANO METALICS
GLOVE BOX CATALYST
GLOVE BOX BIOLOGY
FUME HOOD
ELECTRICAL PANEL
38'-4 7/8"
34'-8"
14'-2 5/8"

Endstation Capabilities of ISS

Base Scope

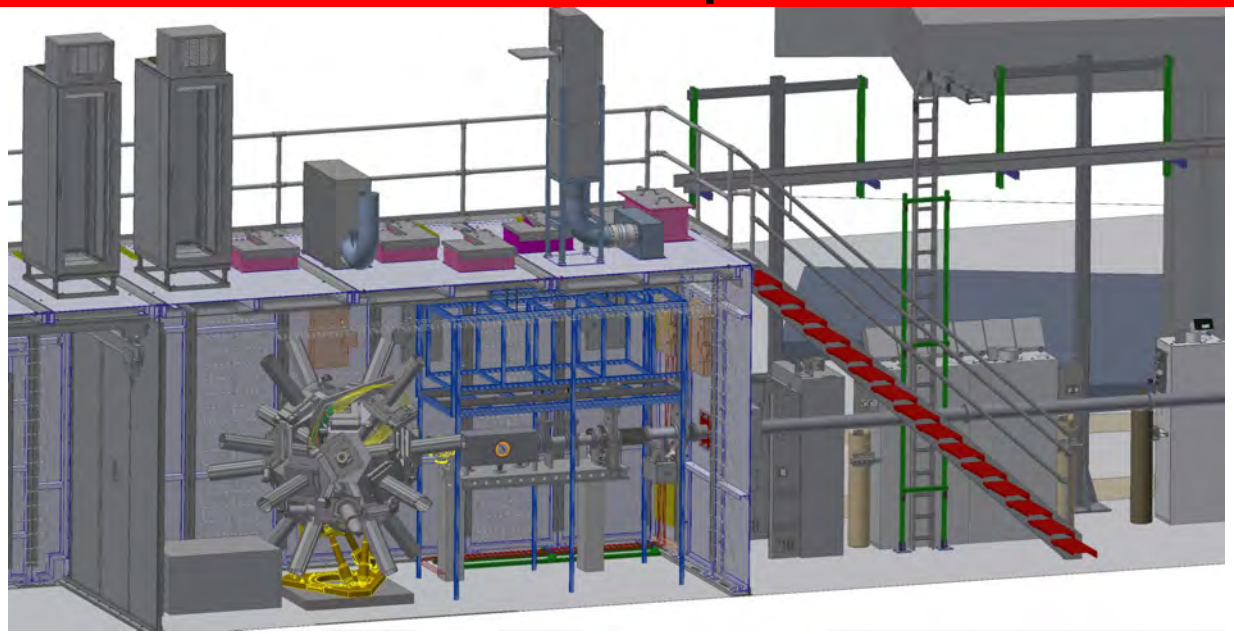

- Fully integrated Gas Handling System (GHS)
- Detection systems:
  - 20 SDD system
  - 2 Spherical Backscattering Analyzer system with 5 analyzers each
  - 2 Van Hamos analyzer systems
- Inert sample handling concept
- Fast scanning concept
- Free space in second hutch

“Beam-Preparation” Tools

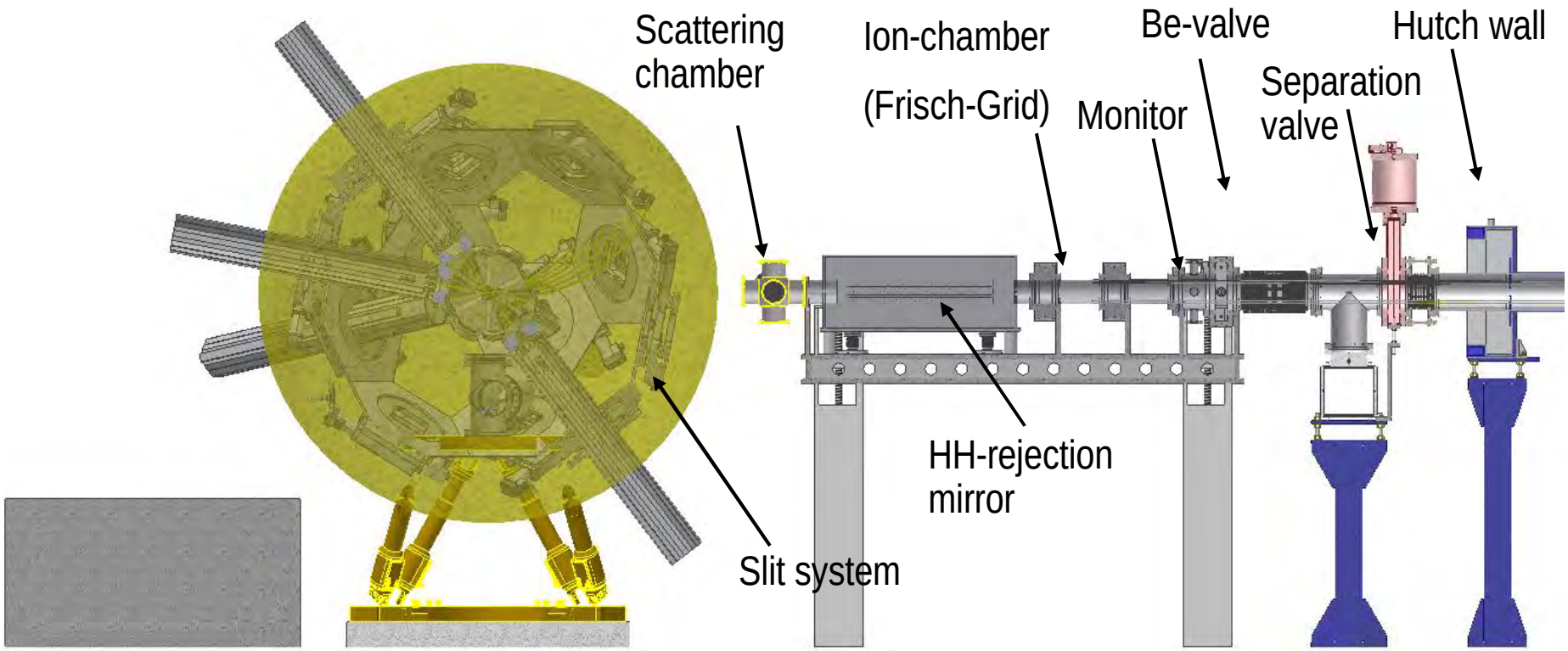

- Normal operation with Be-window (E>6.5KeV)
- Optics is capable to follow 4 modes of operation (focused, unfocused, high-res, and high-flux mode)
- Beam characterization is optimized to allow 10kHz data acquisition

Photon Delivery System Contract Status

Activity	High heat load mono	Collimation mirror system	High heat load mirror	Focusing mirror	Filter box	Beam transport	High harmonic rejection mirror
Writing spec	✔	✔	✔	✔	✔	✔	✔
Procurement	✔	✔	✔	✔	✔	✔	✔
Award	4/21/14	7/8/14	10/18/13	7/29/14	7/17/14	1/8/15	
PDR	6/24/14	10/2/14	N.A.	10/2/14	N.A.	2/25/15	
FDR	9/8/14	12/3/14	N.A.	12/3/14		3/19/15	
Fabrication	Test in March		Leak in manifold		Contract revision		New solicitation
Expected delivery (base)	6/26/15	11/6/15	August 2015 (Dec. 2014)	12/15/15	Nov. 2015 (3/15/15)		

No Impact / as planned

No Impact / corrective action

Procurement Strategy

- Packages
  - Detection systems (electronics & sensors):
    - SDD package
    - Linear Array system (Mythen)
  - Spectrometer mechanics
  - Chamber & alignment mechanics
  - Sample handling system
  - Gas Handling System
  - Data “computing”: Server
- To be ordered:
  - Sample heating system (laser heating system)

- In-House Developments
  - Cryostat & Sample units (more later)
  - Data Acquisition System
- External development
  - Additional spectrometer type (STTR-project)

Correlated motions are programmed by vendor
(on controller level providing EPICS variables for degrees of freedom)

End Station Contract Status

Activity	XAFS Detector System	Linear Array Detection System	Spectrometer Mechanics	Sample Chamber	Sample Transfer System	Gas Handling System	Data Acquisition System
Writing spec	✔	✔	✔	✔	✔	✔	✔
Procurement	✔	✔	✔	✔		✔	✔
Award	10/16/14					9/4/14	
PDR	N.A.					10/22/15	
FDR						12/11/15	
Fabrication	Test on 12/15	No delays				Delayed FDR approval	
Expected delivery	4/15/15	3/16/15		4/15/16		4/28/15	5/30/15

No Impact / as planned

No Impact / with delay

The next sessions will

- Give an overview on individual units
- Provide a discussion of the 6 charge questions to each unit
- Discuss risks and mitigation strategies

Inner Shell Spectroscopy Beamline: Detector Capabilities

Klaus Attenkofer
Level 2 Manager for ISS Beamline
Endstation Review
April 21, 2015

U.S. DEPARTMENT OF ENERGY | Office of Science

BROOKHAVEN NATIONAL LABORATORY
BROOKHAVEN SCIENCE ASSOCIATES

Outline

- Data Acquisition system (Eli)
- The port chambers/configuration
- The spectroscopy system
- The von Hamos System
- The Spherical Backscattering Analyzer system

Detector Integration

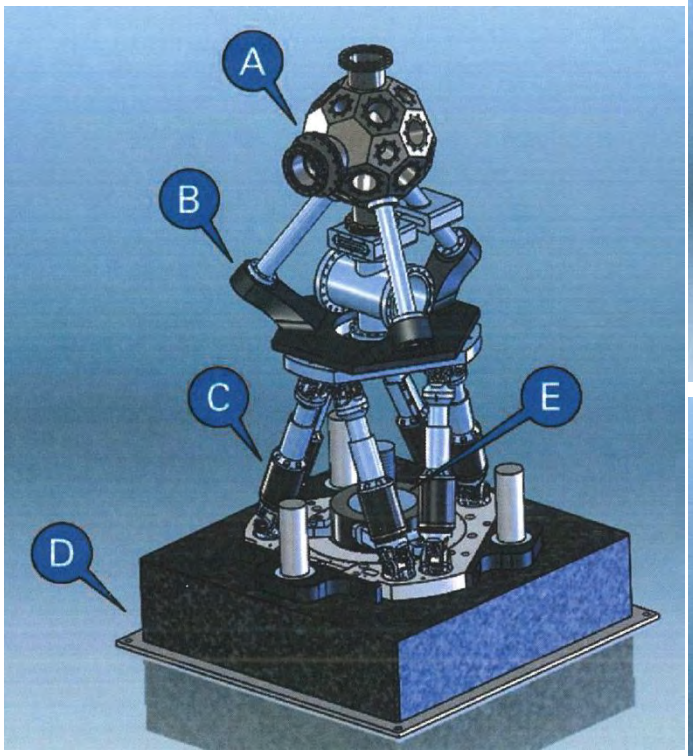

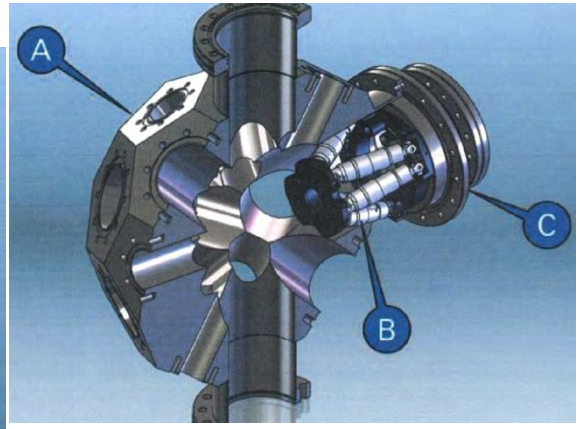

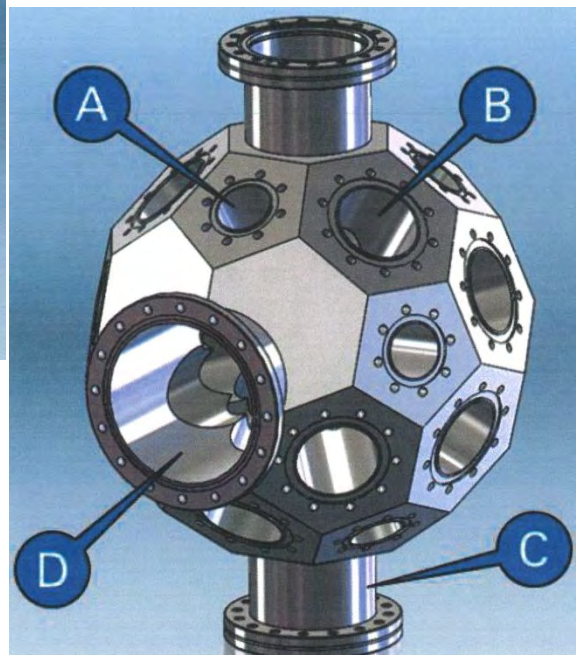

In plane 90-degree port will be implemented

Current maximal pay load: 500kg (in discussion 1000kg)

Chamber with large flexibility:

- Large number of ports available (32 facets)
  - 2 DN 100CF
  - 14 (+2) DN 75CF
  - 8 (+3) DN 50CF
- At least 20 spectrometer ports available
- Additional ports for optical characterization available
- Each port can host collection lenses and hinge system (collimation or focusing)
- Each port can be used without collection lens [2.5cm (or larger) diameter opening: 0.7% (total:30%) solid angle]

Spectrometer Support Structure

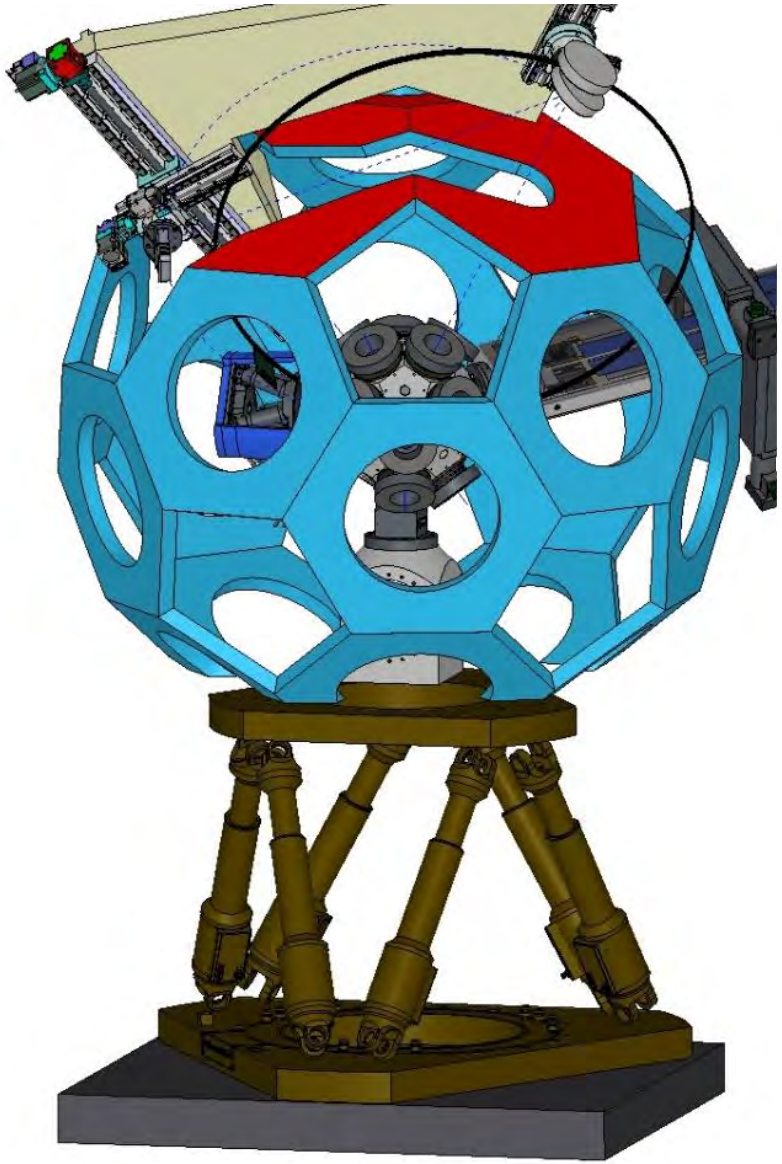

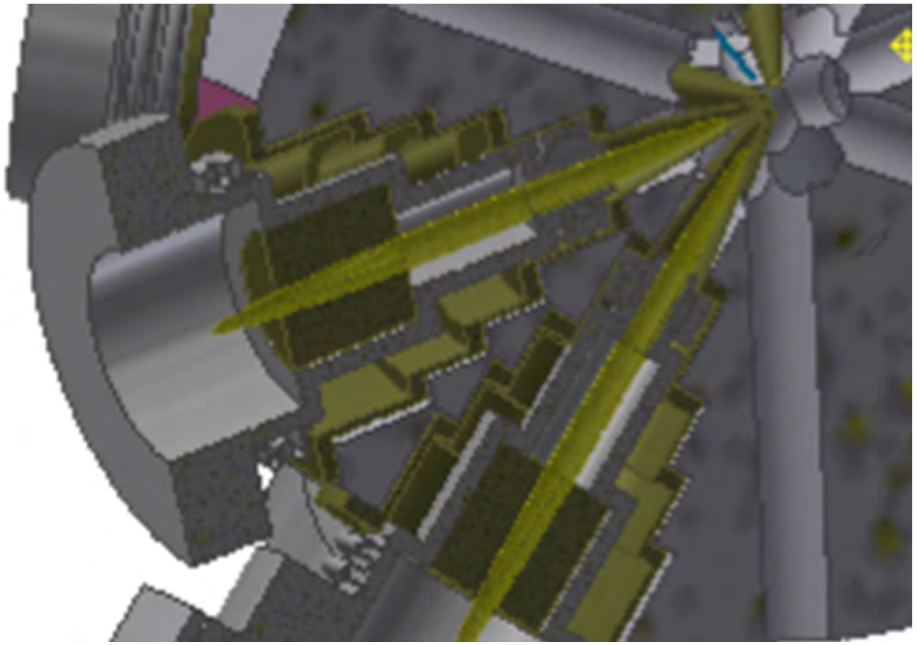

Spectrometer Integration:

- Modular support frame provides mounting points for mechanics
- Hinge insets provide pivot point for spectrometers
- Frame elements can be replaced for specific detection requirements and for maintenance
- Current “diameter” is 800mm

The Hinge Mechanism

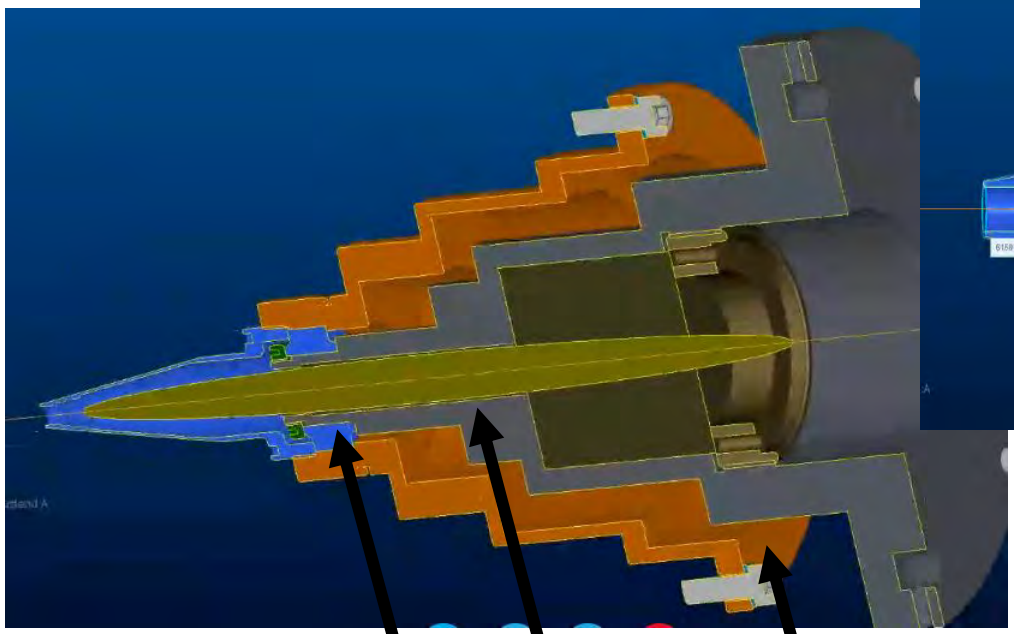

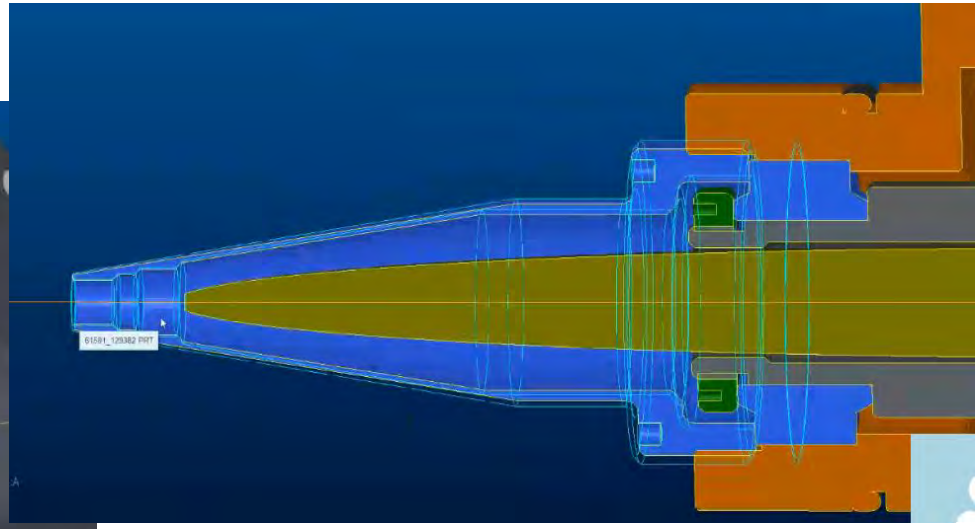

Spectrometer Integration:

- System can be removed from chamber allowing larger solid angle
- Lens is pre-aligned mounted
- Spectrometer will be pre-aligned with inset
- Pre-aligned unit will be mounted
- X-y stage mounted on outside support frame will allow to scan the focal spot of spectrometer

BACKGROUND AND DETECTION LIMIT

10μmol/L

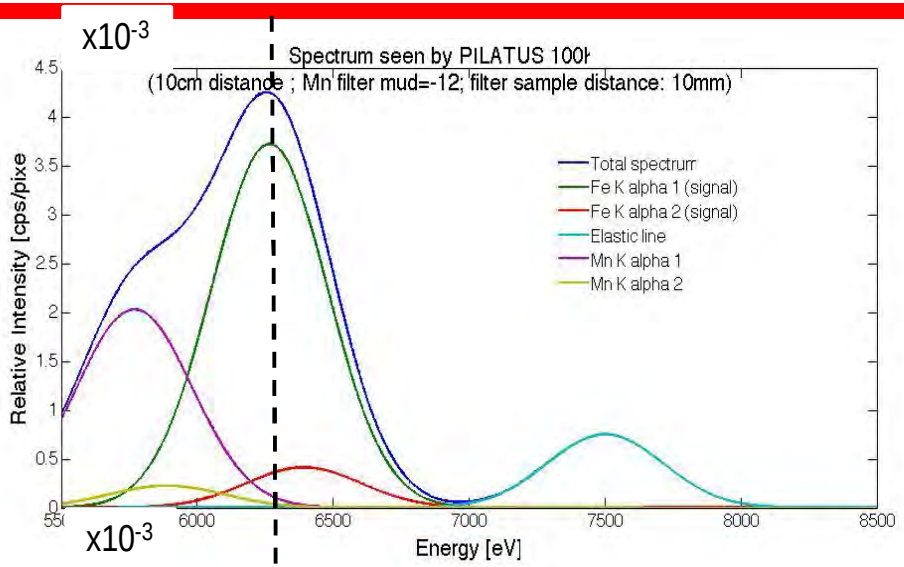

15 hours of data acquisition for a 10μmol/L Fe-solution (1000 points with 0.1% statistical error)

1μmol/L

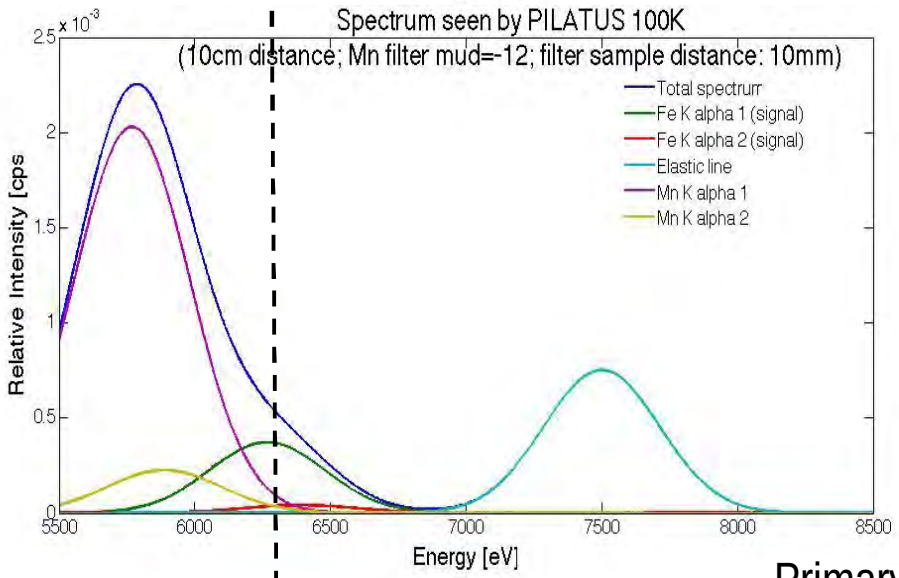

Not feasible with this detector

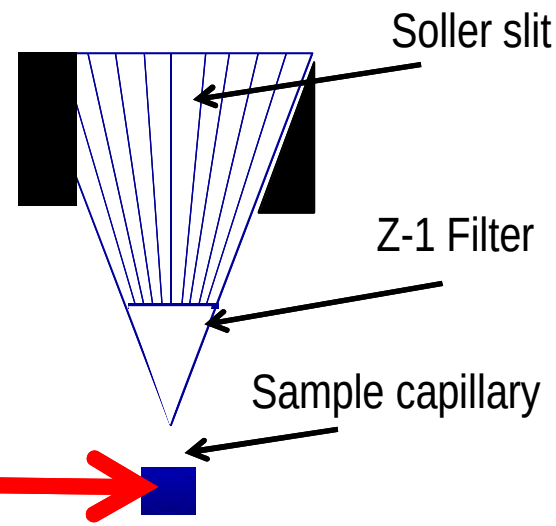

"good photons"

DETECTION SYSTEM
THE BACKGROUND SUPPRESSION

Model:

Property	Ultra dilute
Incoming intensity	10^{14} Photon/s
Signal (Fe K_α)	10^{7} Photons/s
Background (Thomson & Compton)	$2x10^{11}$ Photons/s

Total count-rate: $(\chi+1) * n$

Statistic noise:

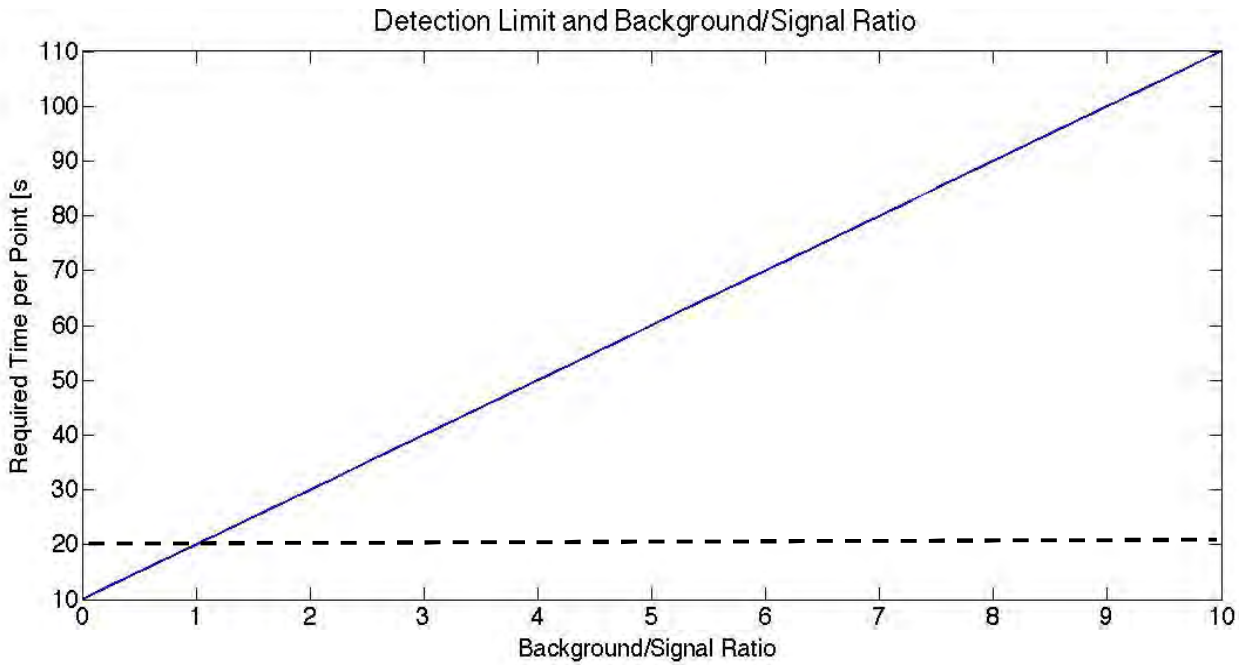

Model assumptions:

- a 1μmol/L solution of Fe in H_2O (Ultra dilute case)
- 10^{14} Photons/s on the sample
- 1% detection efficiency
- 0.1% statistical noise per point

Background to signal ratio dominates detection efficiency

XAFS detector: Concept

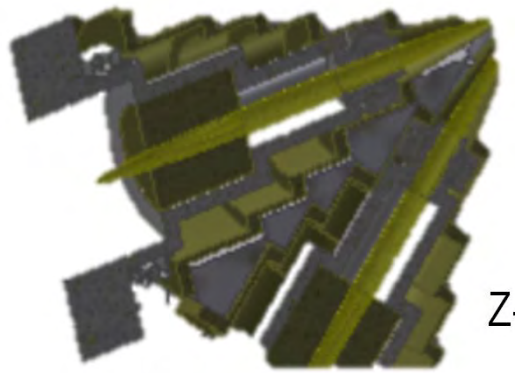

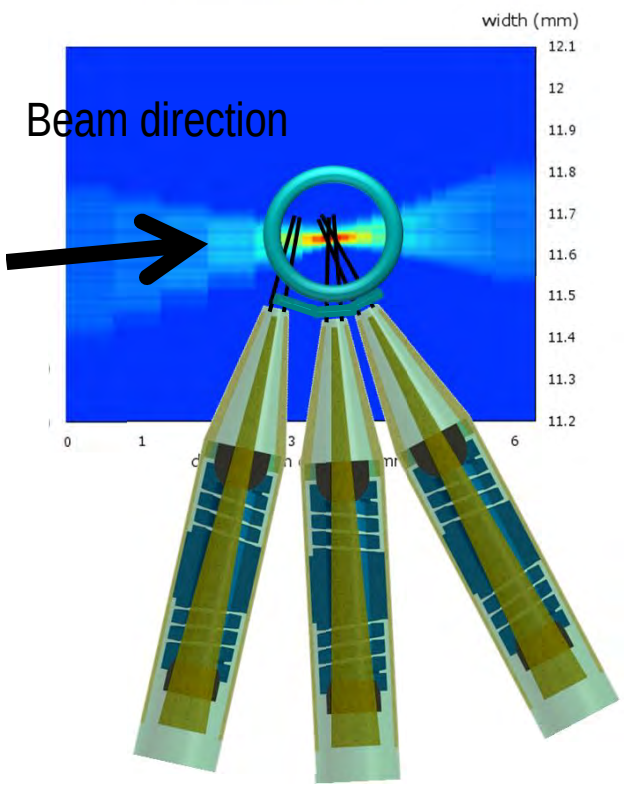

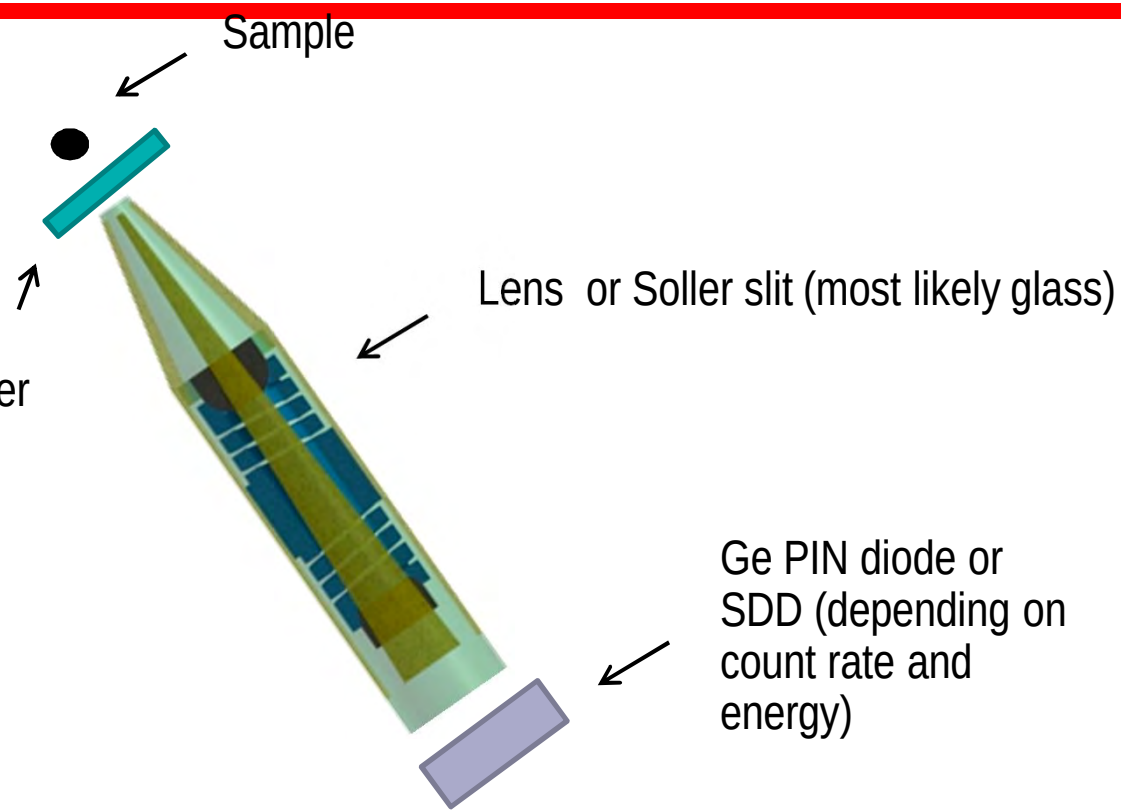

Confocal detection:

- Excellent background suppression
- Selectivity along beam axis
- Reduced “effective” probe volume

The Detector and Electronics:

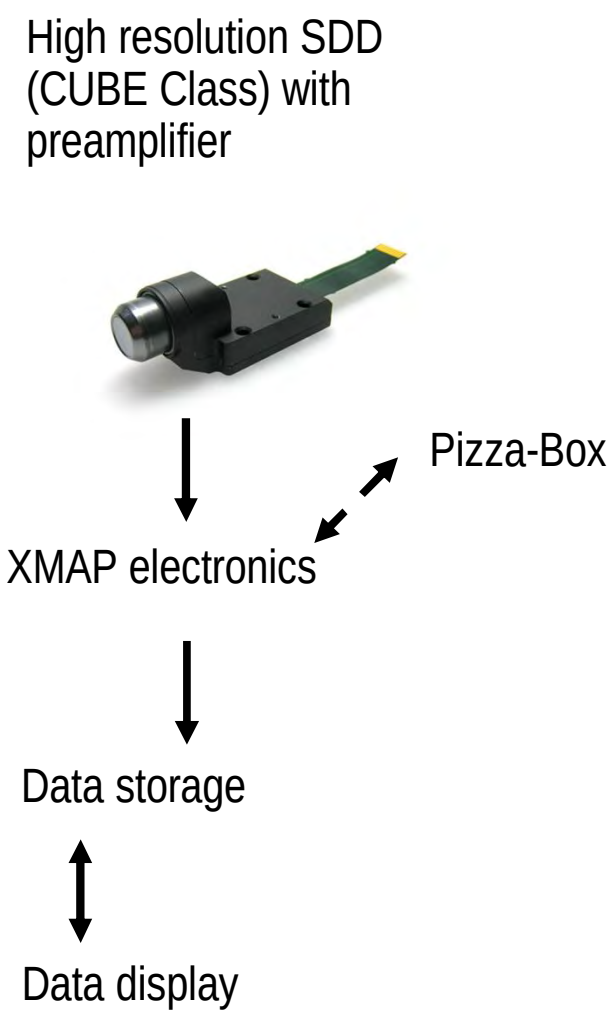

XAFS detectors:

- Choice of 2 detectors:
  - High resolution SDD
    - Ketek H50 Cube Class diode
    - 130eV @ 5.9KeV with up to 300kcps
  - Ge PIN diode
    - for high flux or high energy applications
- 20 Channels will be equipped
- XMAP digital electronics

Status of XAFS Detection:

Complete system available around December 2016

High resolution SDD (CUBE Class) with preamplifier

Pizza-Box

XMAP electronics

Data storage

Data display

- Z-1 filter system: has to be designed (after PDR of Chamber, and Spectrometers, and after cryostat design)
- Lens/soller slit purchase after Z-1 filter design
- Detectors:
  - 20 SDD's will arrive in April
  - Ge detector (Hamamatsu) will be ordered
- Xmap is available
- Pizza box: proto type is available
- Data storage: will be installed in June
- Display software: needs to be programmed

Von Hamos Spectrometer Concept:

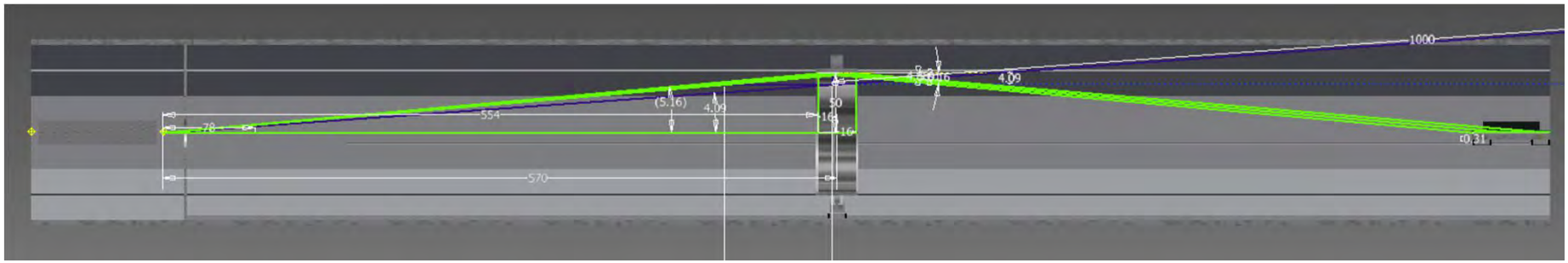

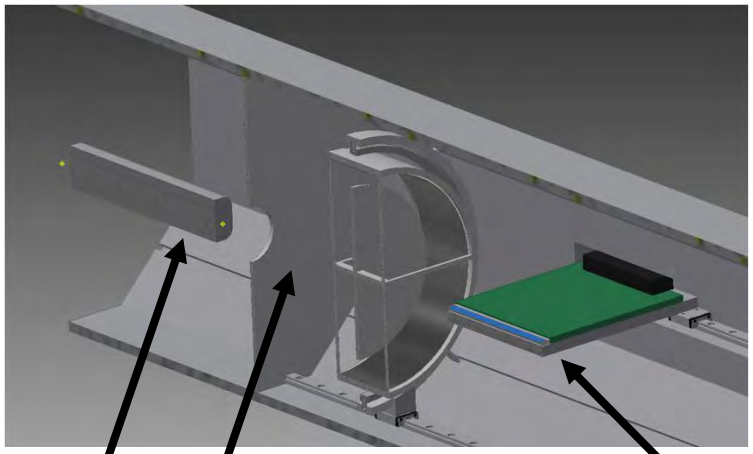

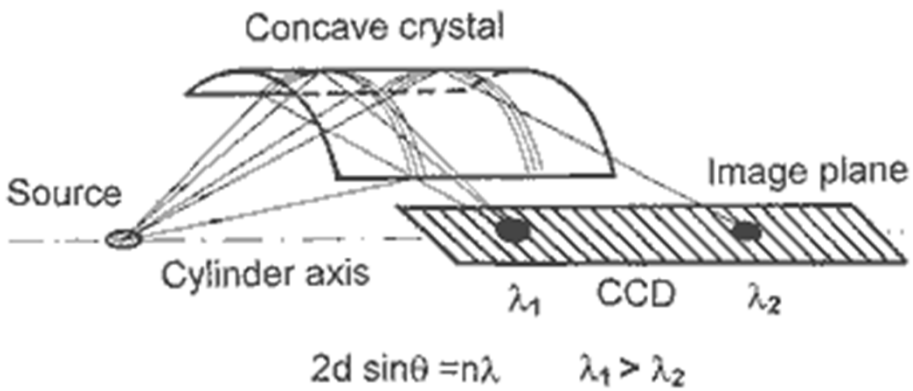

Virtual source: allows divergence adjustment and background suppression

Linear array allows full spectrum acquisition

Von Hamos Spectrometer Crystal:

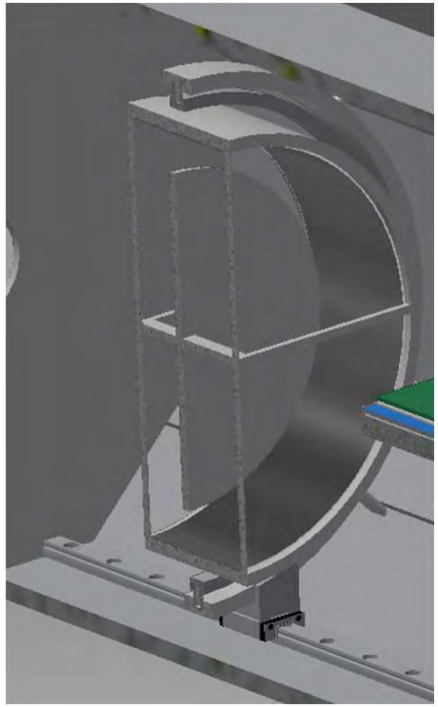

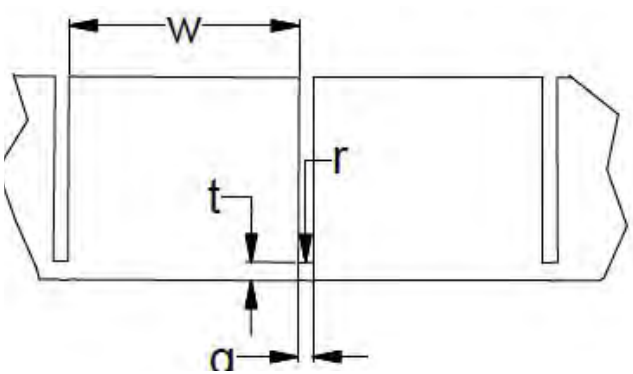

- Cut: Si 111 or Si 400 (will cover 4-30keV)
- Crystal Geometry: 50mm bending radius
- Crystal mount:
  - manual alignment for two angles
  - Motorized longitudinal alignment (energy)
- Integrated “0-order” suppression reduced background
- Crystal sources:
  - Build from individual un-bend crystal elements and mounted prealigned in cylindrical form (vendor has experiences with this technology)
  - Monolytic system based on SOI wafer (Collaboration with Cornel)

Von Hamos Spectrometer Detector:

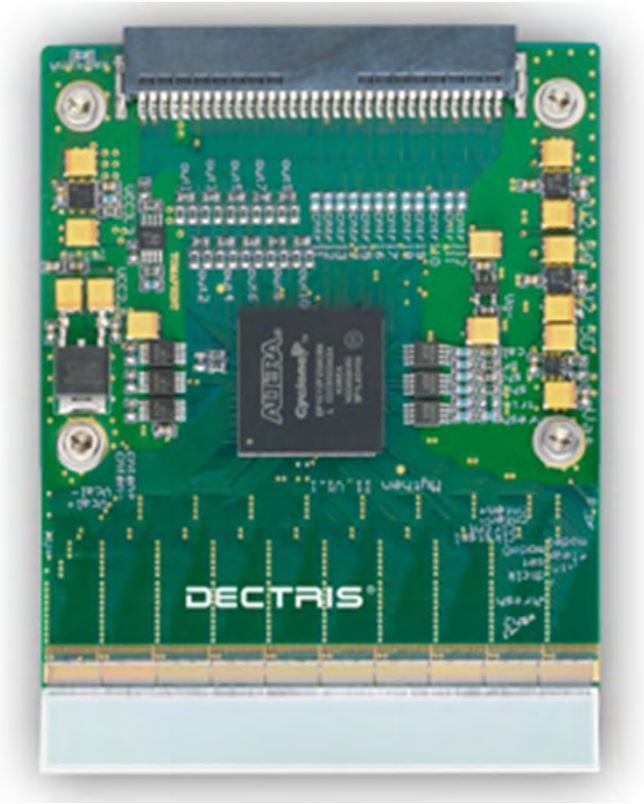

- Pixel size matched with 1eV resolution
- Sensitive area: 64mm x 8mm
- Dimension of 1 element: 50 x 8000 μm^2
- Readout time: 0.3ms (~300Hz)
- Non packed version: Will be integrated into spectrometer mechanics.
- Procurement:
  - 5 systems are purchased
  - Electronics is setup for 20 systems
  - Additional detection system will cost about $20K

Von Hamos Spectrometer Components:

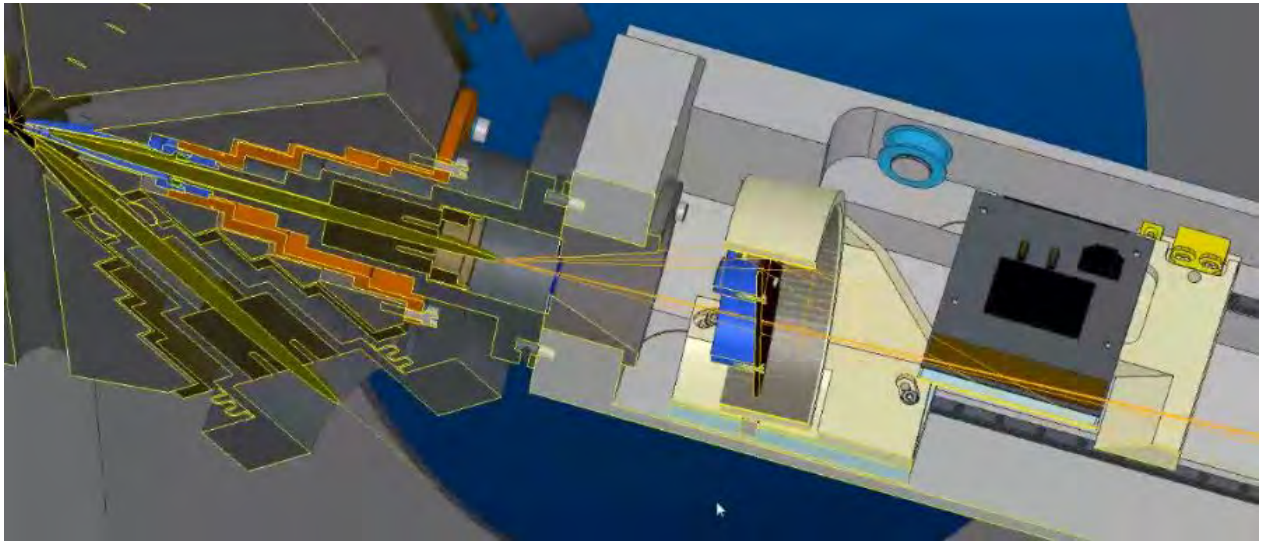

Complete system available around May 2016

- Lens system will be ordered after PDR of mechanics (about 3 month lead time)
- Mechanics: proposal are in evaluation process; PDR expected in June-July
- Crystal will be ordered after PDR of mechanics (about 3 month lead time)
- Linear array and electronics already at BNL
- Trigger and synchronization software will be evaluate within the next 4 month (most likely available)
- Data analysis software will be started after complete system is assembled

Spherical Backscattering Analyzer

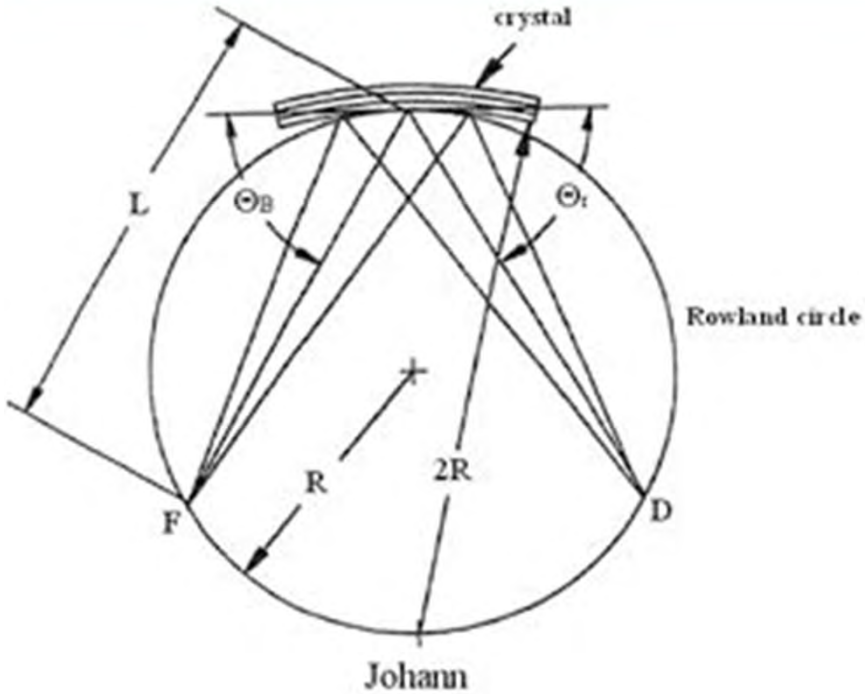

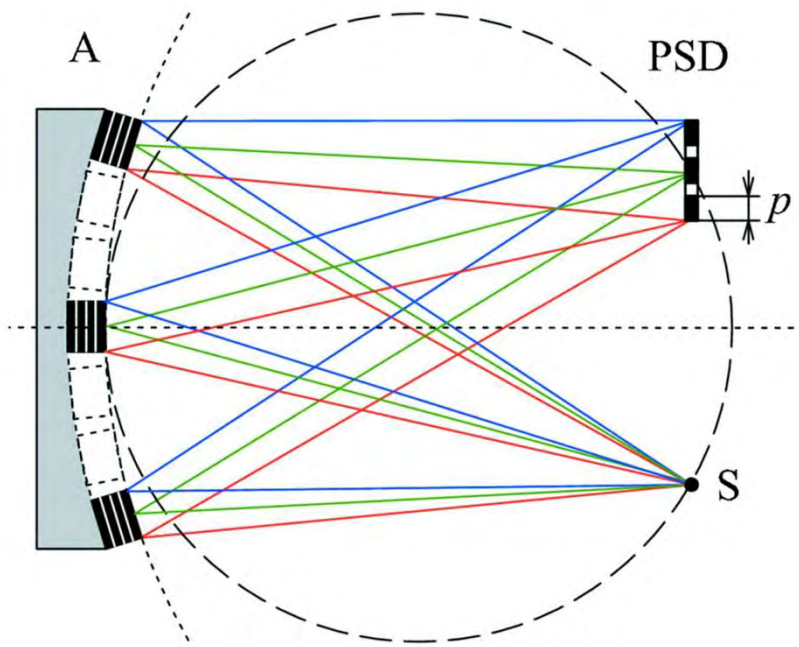

(B)

- SBA system requires multiple crystal cuts
- Energy resolution is smaller for larger angles
- Typical resolution 1-1.5eV
- Currently the work horse in RIXS
- Multiple energies can be detected by using detector system or sample offset from rowland circle

SBA Integration Concept

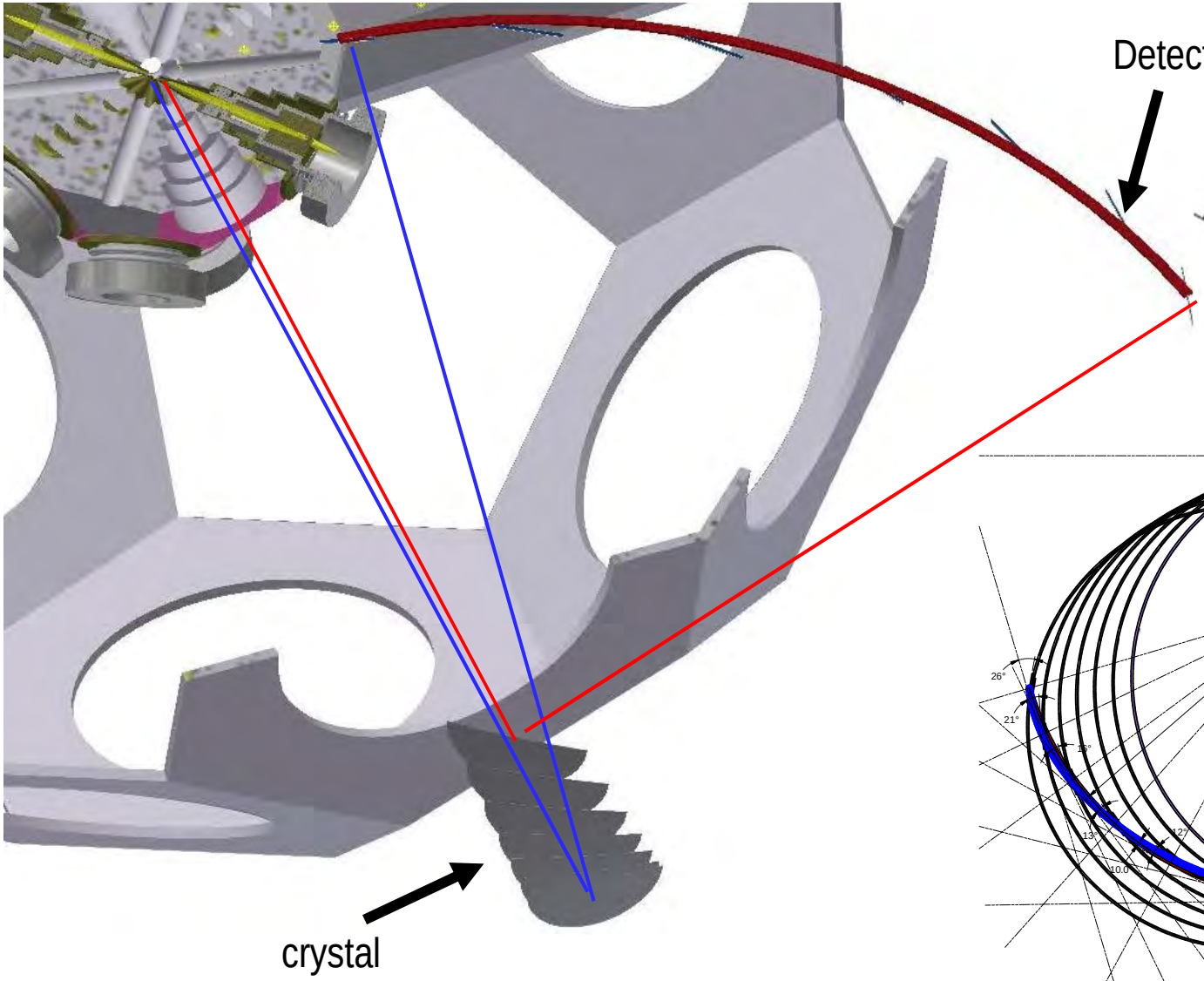

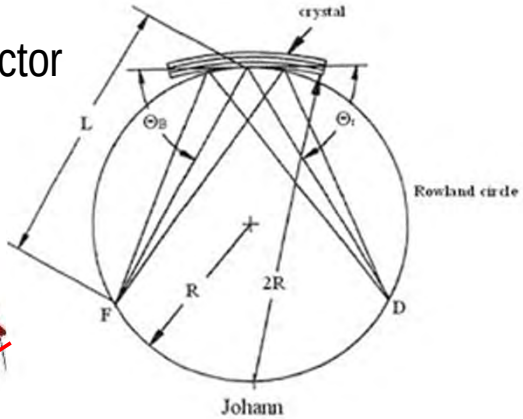

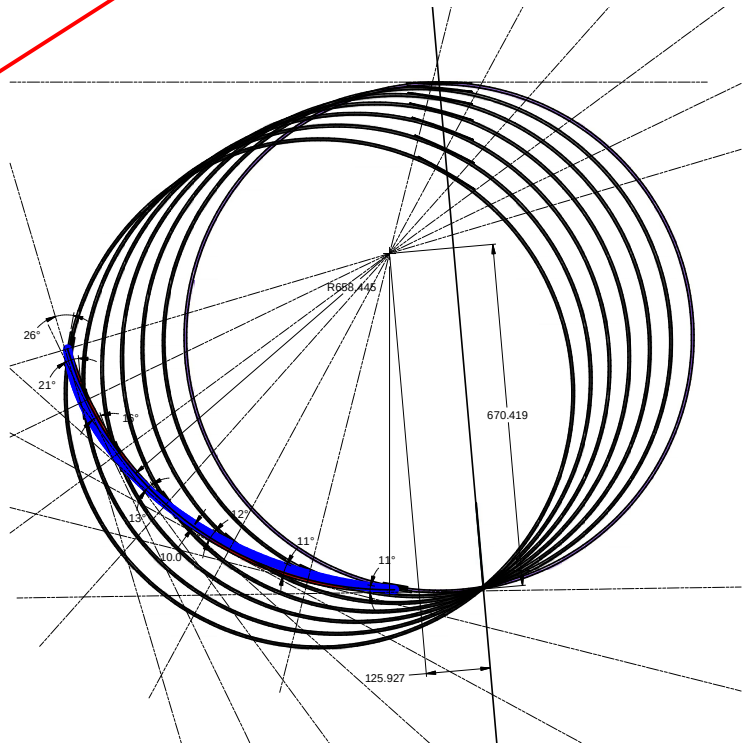

SBA Integration Mechanics

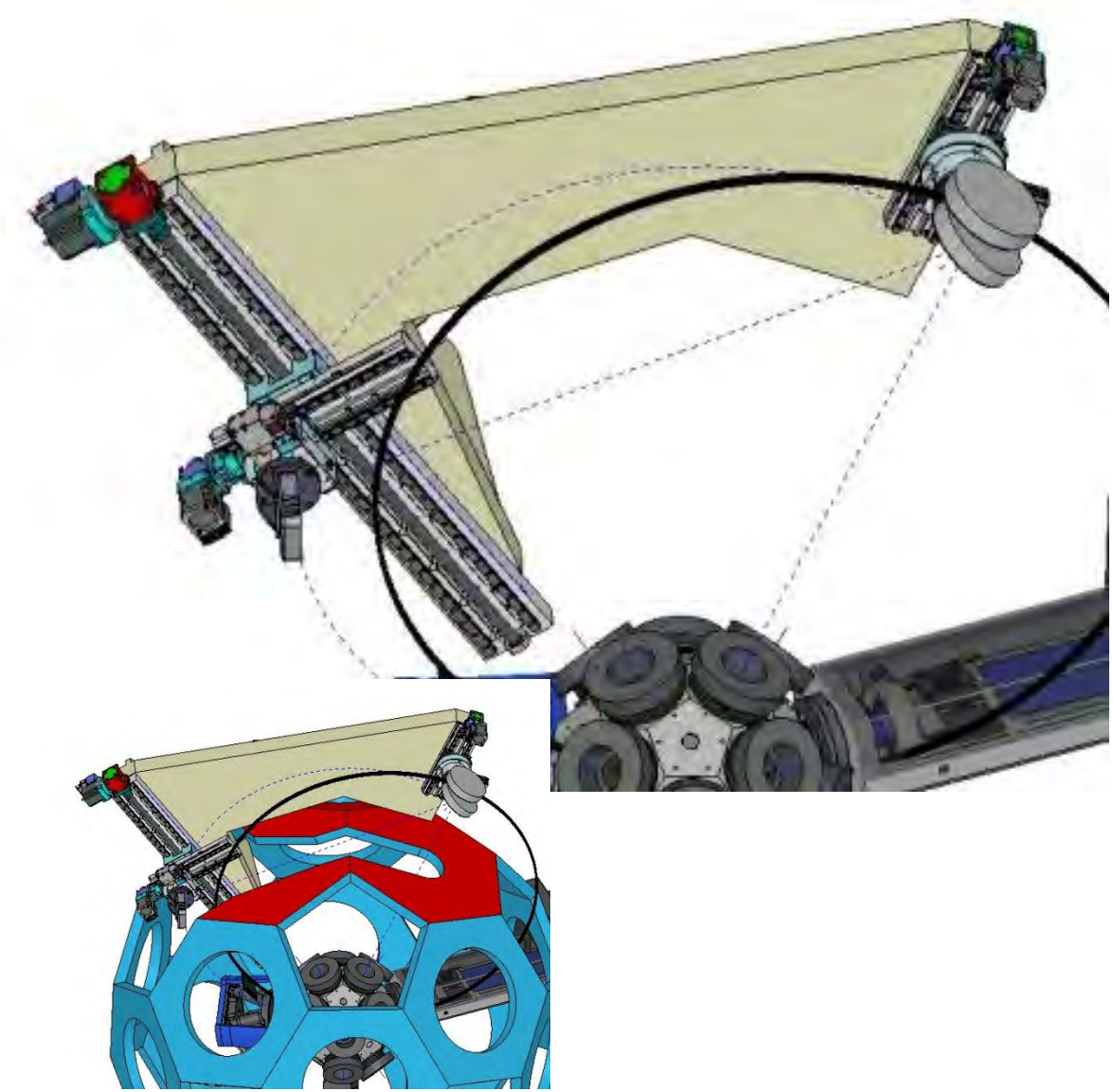

- Backbone provides mechanical stability
- Detector assembly will be positioned with x-y and rotation stage
- Complete mechanics allows 85 - 70 degree
- Complete mechanics allows to integrate collection lens
- He- or vacuum chamber will be integrated
- One system requires “two ports”

- In discussion with vendor:
  - Increase to 7 element system

SBA Detector (identical to von Hamos):

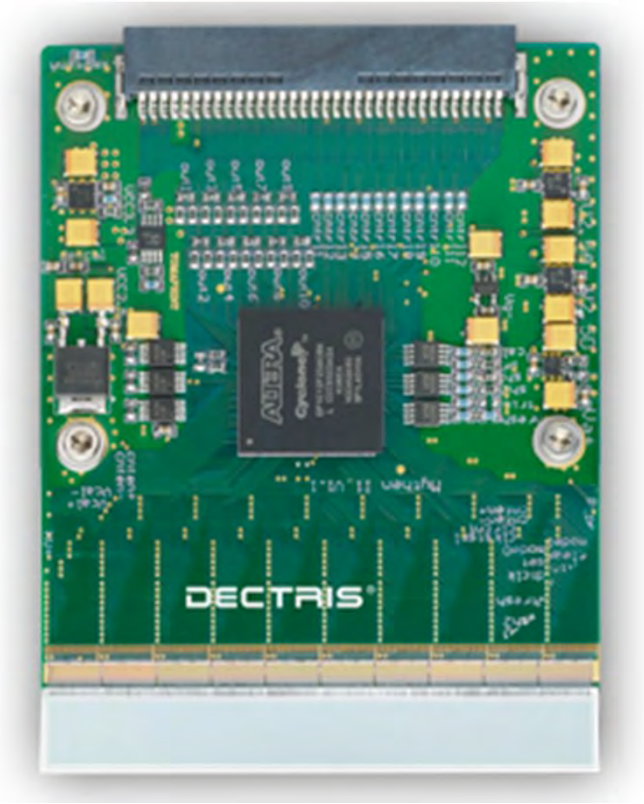

- Pixel size matched with 1eV resolution
- Sensitive area: 64mm x 8mm
- Dimension of 1 element: 50 x 8000 μm^2
- Readout time: 0.3ms (~300Hz)
- Non packed version: Will be integrated into spectrometer mechanics.
- Procurement:
  - 5 systems are purchased
  - Electronics is setup for 20 systems
  - Additional detection system will cost about $20K

SBA Status

Complete system available around May 2016

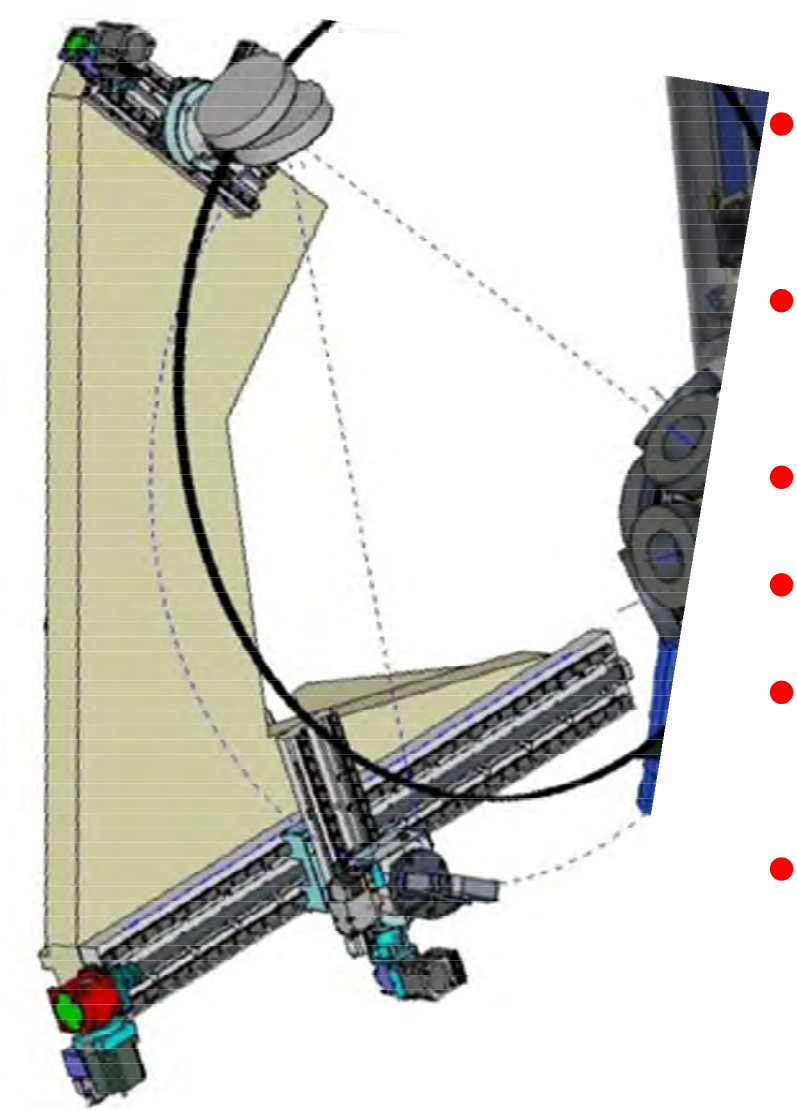

- Mechanics package proposal are due on Friday
- First systems will be installed without collection lens
- Analyzer crystals will be ordered after PDR of mechanics package
- Detector system and electronics are available
- Timing synchronization is most likely available
- Controls (pseudo motion) will be integrated on controller level by vendor
- Calibration and display software needs to be programed

Additional Czerny Turner Spectrometer

Multi-Channel Optics MCO

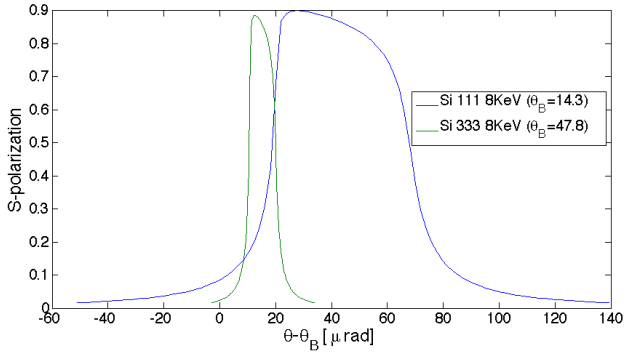

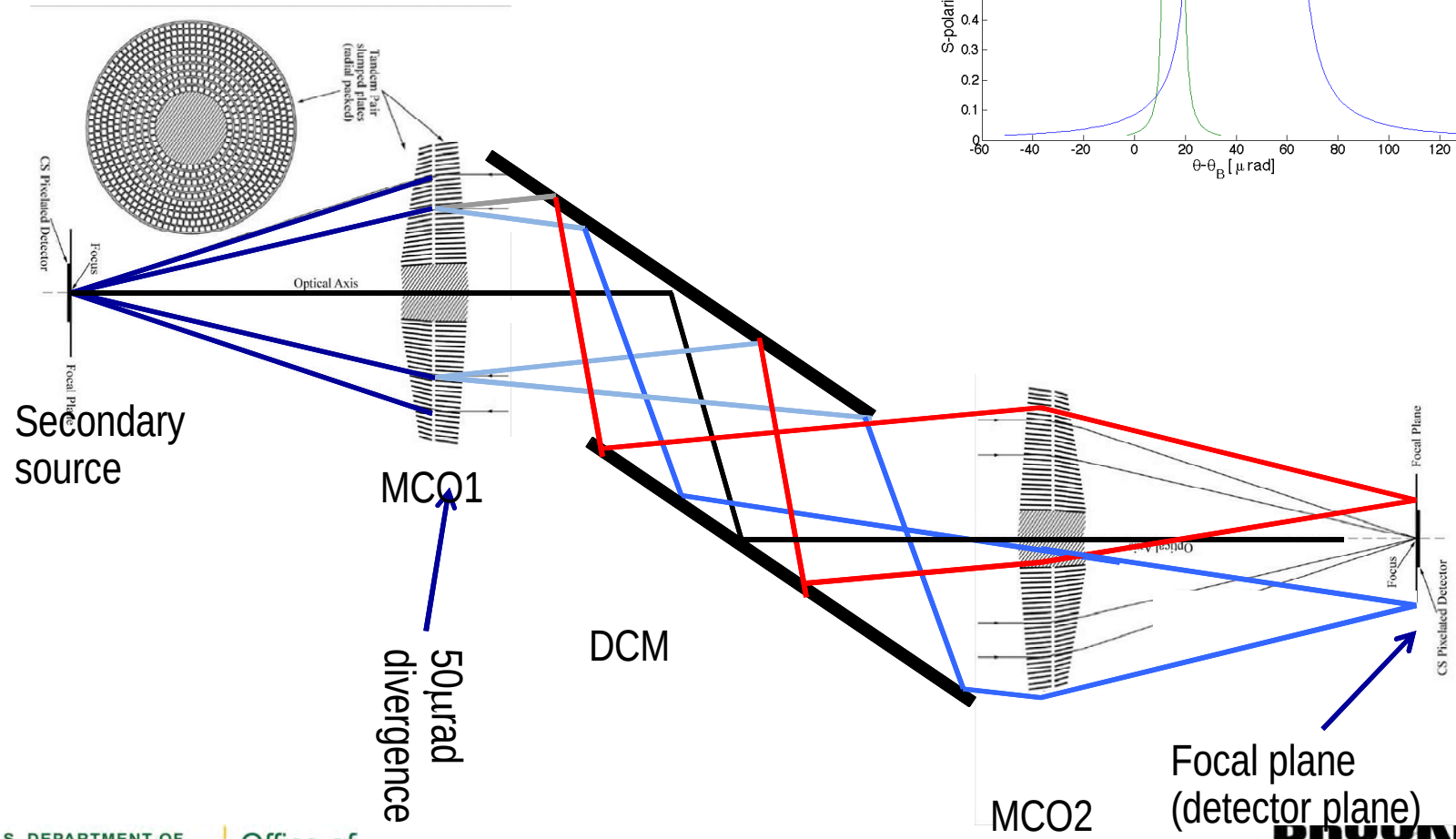

Secondary source

MCO1

50μrad divergence

DCM

MCO2

Focal plane (detector plane)

U.S. DEPARTMENT OF ENERGY | Office of Science
BROOKHAVEN NATIONAL LABORATORY
BROOKHAVEN SCIENCE ASSOCIATES

Additional Czerny Turner Spectrometer

- New design
- Development and prototype funded by STTR **(not part of project)**
- Development partner: Incom.Inc
- Spectrometer will allow fast energy changes and energy resolution in the range of 1eV
- Main risks:
  - Lenses are currently optimized
  - Alignment mechanism for lenses still unclear (main cost factor)
  - 1-3μm detector is required: Will be provided by PSI (Moench system)

Complete system available end of 2016

Conclusions

- Time line
  - XAFS detection system will be fully functional when chamber is available (20 element system)
  - Von Hamos and SBA will be available around May 2016 (2 von Hamos, 2 SBA)
  - Czerny-Turner spectrometer will be available at the and of the year 2016 (1 system)
- Charge questions:
  - Is the detection system adequate
    - Comparable solid angle coverage as any of the competitors
    - Significantly larger flexibility as in other beamlines
    - Fully integrated detection and sample environment system

Conclusions

- Charge questions:
  - Major technical risks
    - Interdependence of the various procurement packages
    - Not completed sample chamber design
    - Mechanical stability of support frame & spectrometer mechanics
  - Mitigation:
    - Strong interaction with vendors (including multiple site visits)
    - Spectrometer design is defining envelop for sample chamber design
    - Intensive discussions with vendors show that the structure can be build rigid enough (supported by FEA): An increased load capacity of hexapod is required.
  - Is procurement possible: Yes, already fully in progress
  - ES&H/QA: No specific measures are required

Conclusions

- Charge questions:
  - Interface with Common and controls:
    - Common: will be shown during walk through
    - Controls: All major work will be provided by vendor
  - Is everything planned for successful Instrument Readiness Review: This system is not part of the IRR. The IRR will be completed before the system is available allowing fast commissioning.

ISS Data Acquisition Strategy

Eli Stavitski
ISS Beamline Scientist
ISS Endstation Review
April 21, 2015

U.S. DEPARTMENT OF ENERGY

BROOKHAVEN NATIONAL LABORATORY
BROOKHAVEN SCIENCE ASSOCIATES

Outline

- Design challenges
  - Fast data acquisition (1-50 Hz DCM scanning speed)
  - Range of 0D, 1D and 2D detectors
  - Sample environment
  - Large number of motorsmotors
- Control and DAQ system should provide
  - synchronization and time stamping of the data
  - automated sampling handling and alignment
  - automated data acquisition
  - integrated computer controlled sample environment

DAQ rationale

- New strategy is required to avoid frequent triggering (which increases overhead)
- Fast scanning are (i.e., monochromator full EXAFS scan at .10 Hz) is a challenge
- Multiple detectors are involved, need to be synchronized
- High flux demands fast experiments, as sample damage may occur

Proposed DAQ strategy

- A scan is performed by moving a motor/motors
  - Motion trajectory is loaded into a motion controller
  - A signal is sent to the controller to begin trajectory execution
  - A time-stamped trigger is send to the detector controller to begin data collection and is also
- Motor position is determined by reading the encoder signal
  - Every encoder signal is recorded in a hardware buffer and time stamped (GPS time)
  - Encoder readings are summed up every X us and stored on the server
- Detector reading is collected and correlated in time with the encoder signal
  - Every event (or frame) are collected and time stamped (using controller internal bus clock)
  - Time-stamped trigger serves as a 0 time
- Two data streams are read and times are corellated in time to produce and “regular” spectrum

Proposed DAQ strategy

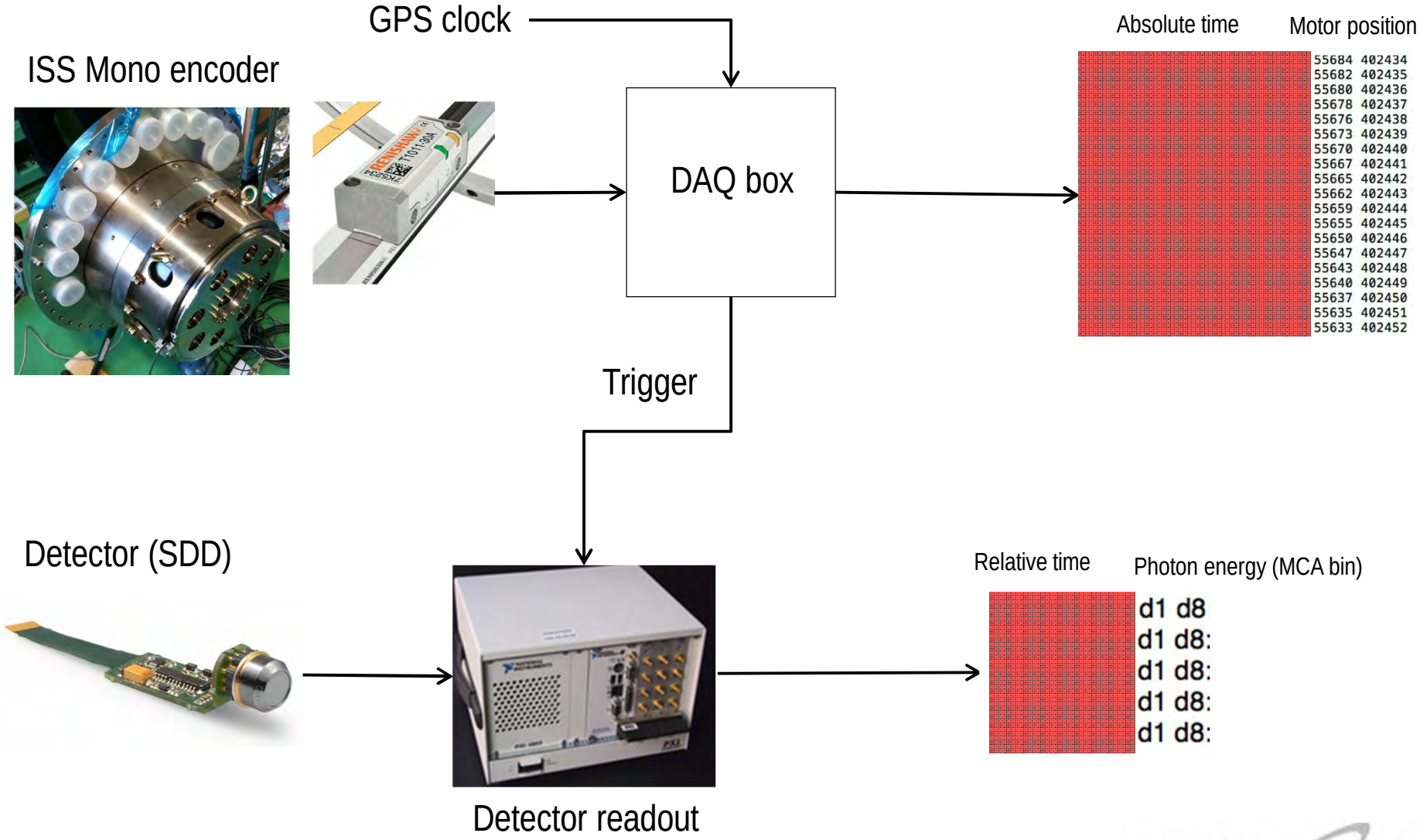

Proposed DAQ strategy (II)

Detector data stream

Relative time Photon energy (MCA bin)

d1 d8
d1 d8:
d1 d8:
d1 d8:
d1 d8:

Using time stamped trigger as time zero, every photon can be assigned absolute time

94 03 a9 c1 d1 d8:
a8 23 a9 c1 d1 d8:

Those photons are received at certain motor position

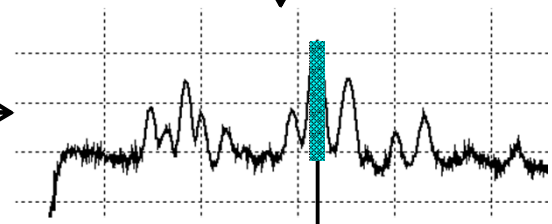

Encoder data stream

Absolute time Motor position

```
16:38:47.719599368 55684 402434
16:38:47.719699312 55682 402435
16:38:47.719899200 55678 402437
16:38:47.719999152 55676 402438
16:38:47.720099096 55673 402439
16:38:47.720298984 55670 402440
```

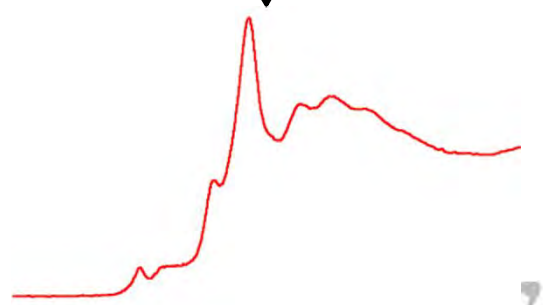

Beamline Instrumentation Box (aka “Pizza Box”)

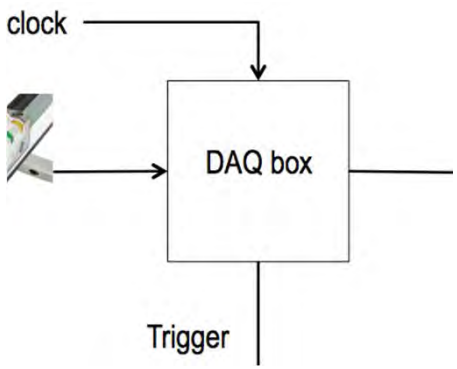

- FPGA 19” rack mountable, 2U height
- Interface board
  - Input circuitry: termination, isolation, digitizing, signals areconditioned to be received by FPGA
- FPGA board
  - Xilinx Virtex6 FPGA
  - Event receiver
  - Ethernet

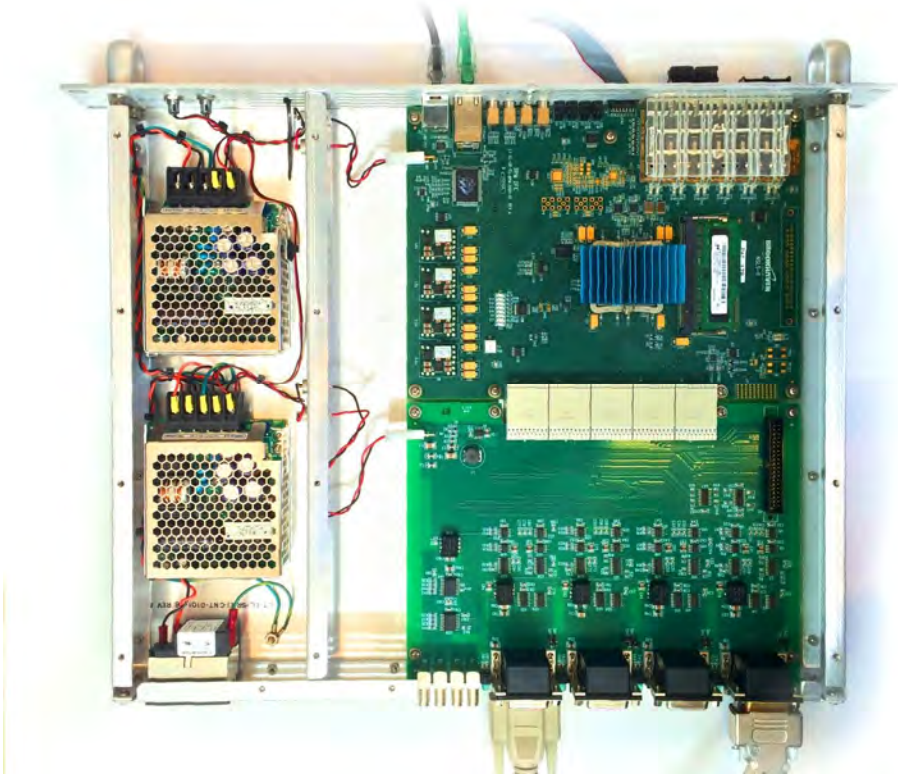

Encoder pizzabox - current status

- Encoder interface
  - 3 units are complete
  - Diagnostics and tests are ongoing
  - Testing with “virtual” motion show exclelent performance (no missing steps or packets)
  - Test stand is built, insufficient stability
  - Will be field-tested in the field during ISS mono FAT (July 2015)

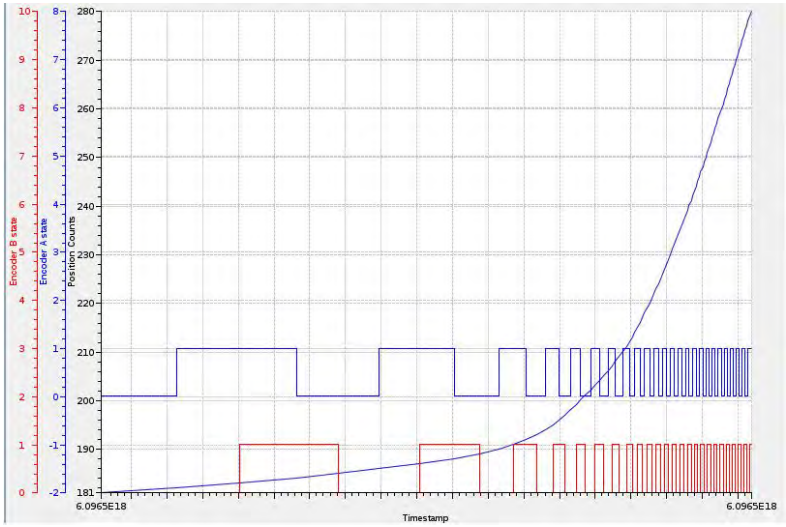

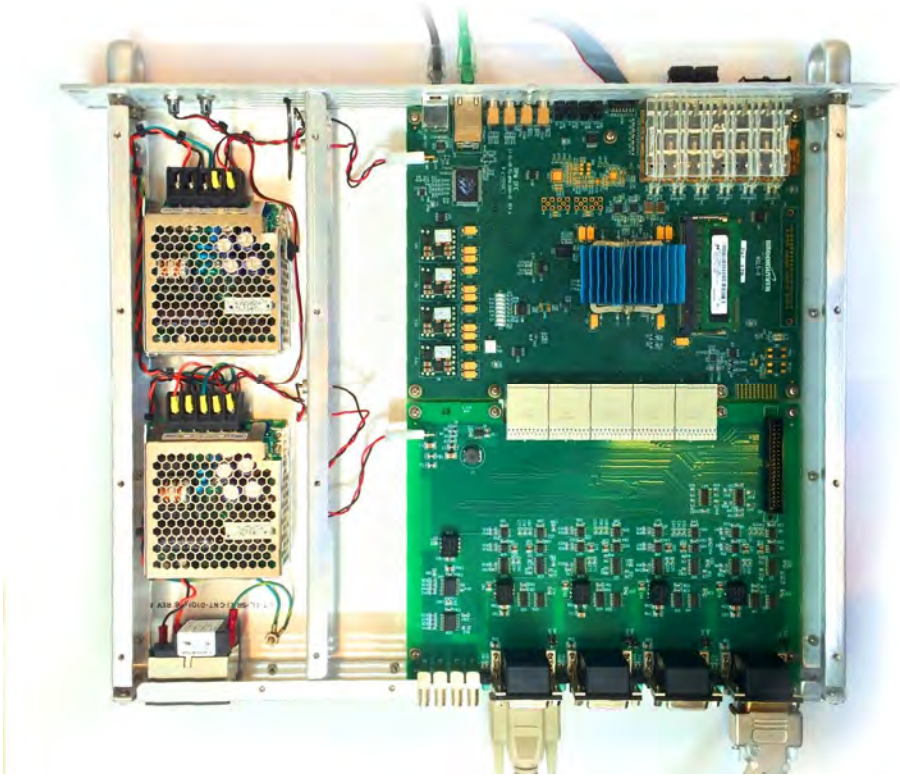

Current DAQ system overview

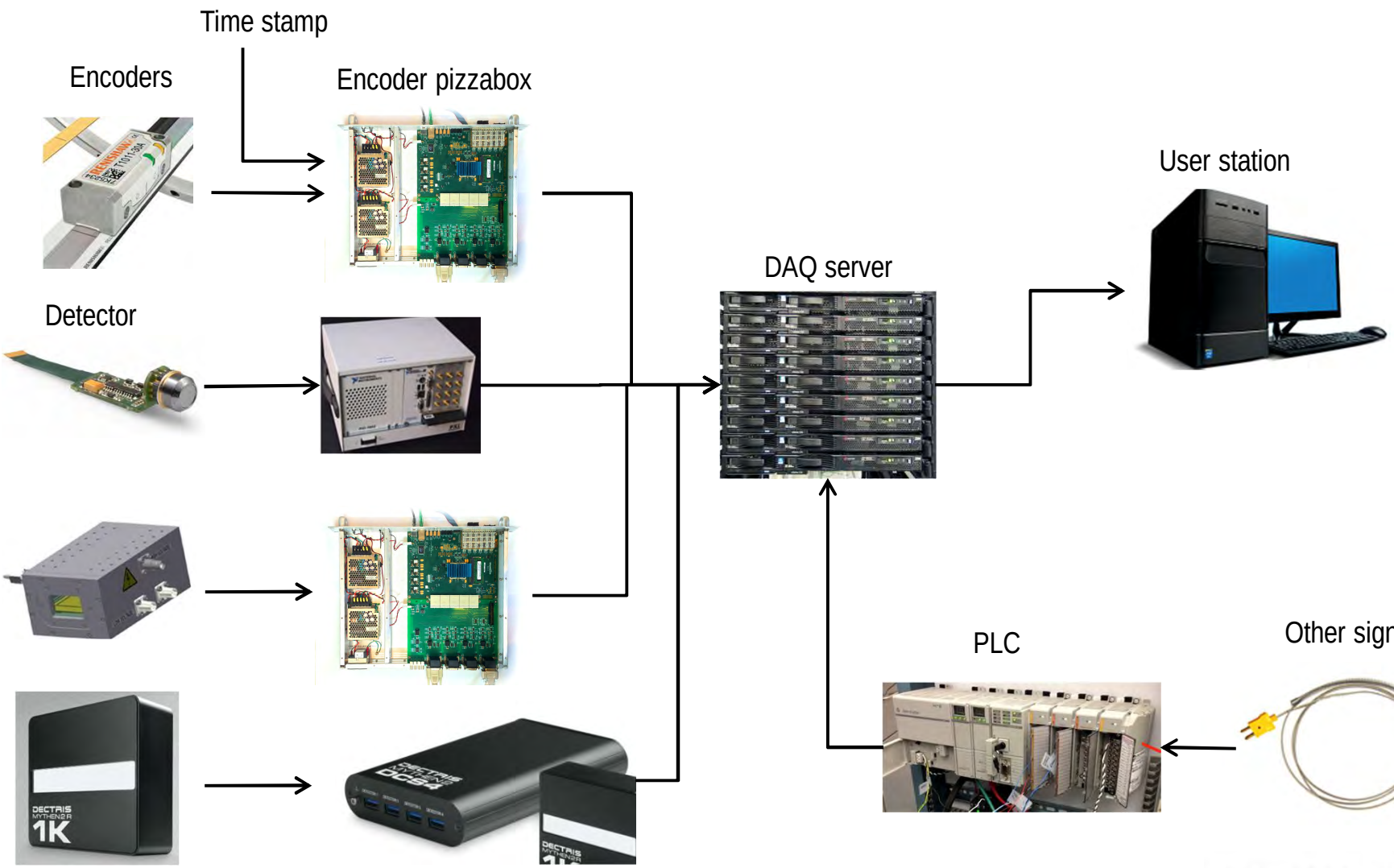

Current status - encoders

Time stamp signal
(installation in Fall '15)

Encoders

Encoders for all ISS packages are compliant (quadrature incremental encoders)

Encoder pizzabox

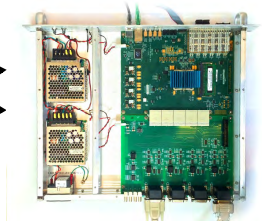

Developed, under testing, two units for field measurements available in July '15

EPICS interface

to be developed

DAQ server

Delivered, Installation in June '15

User station

Ordered, Installation in June '15

Current status - detectors

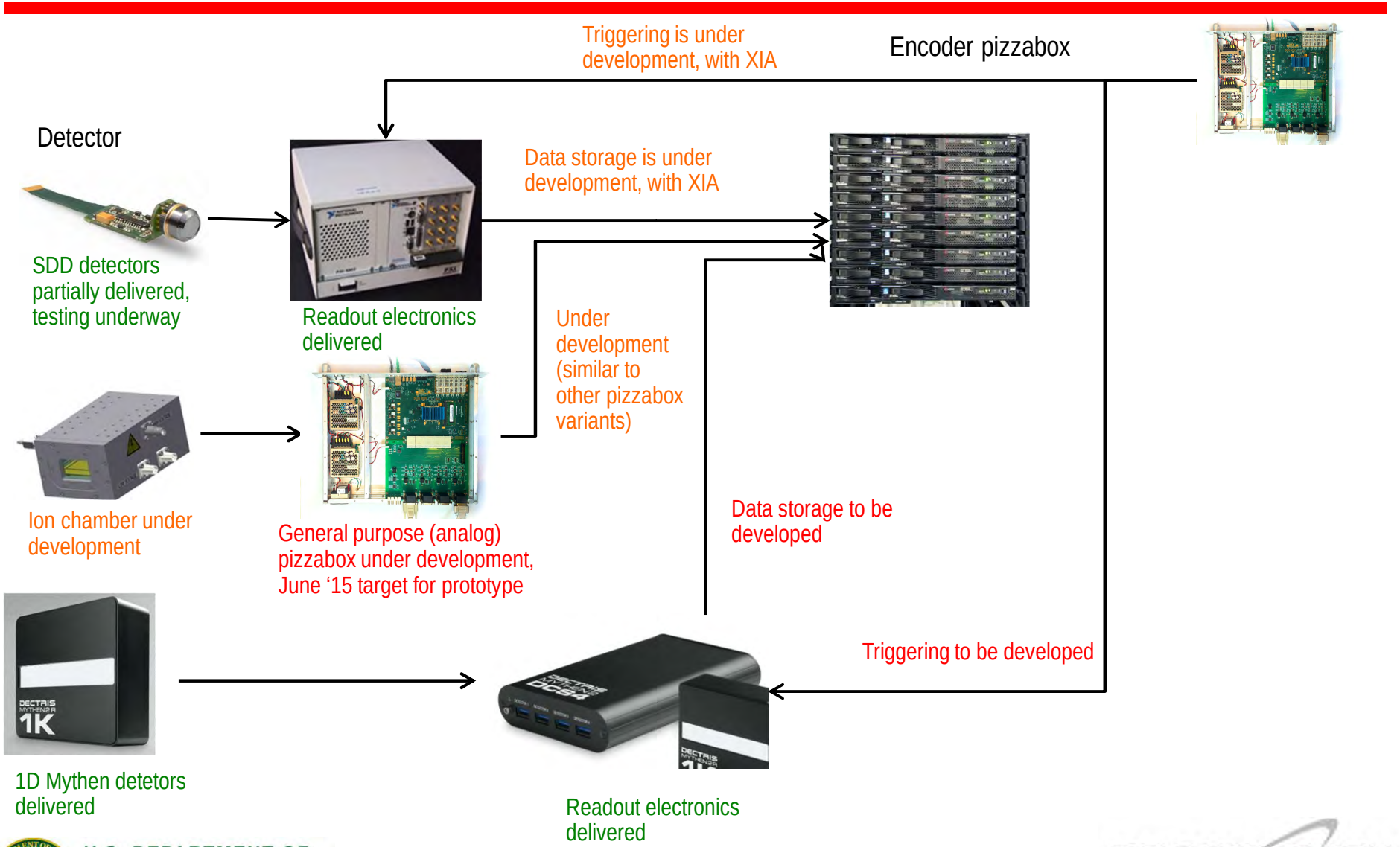

Current status – other signals

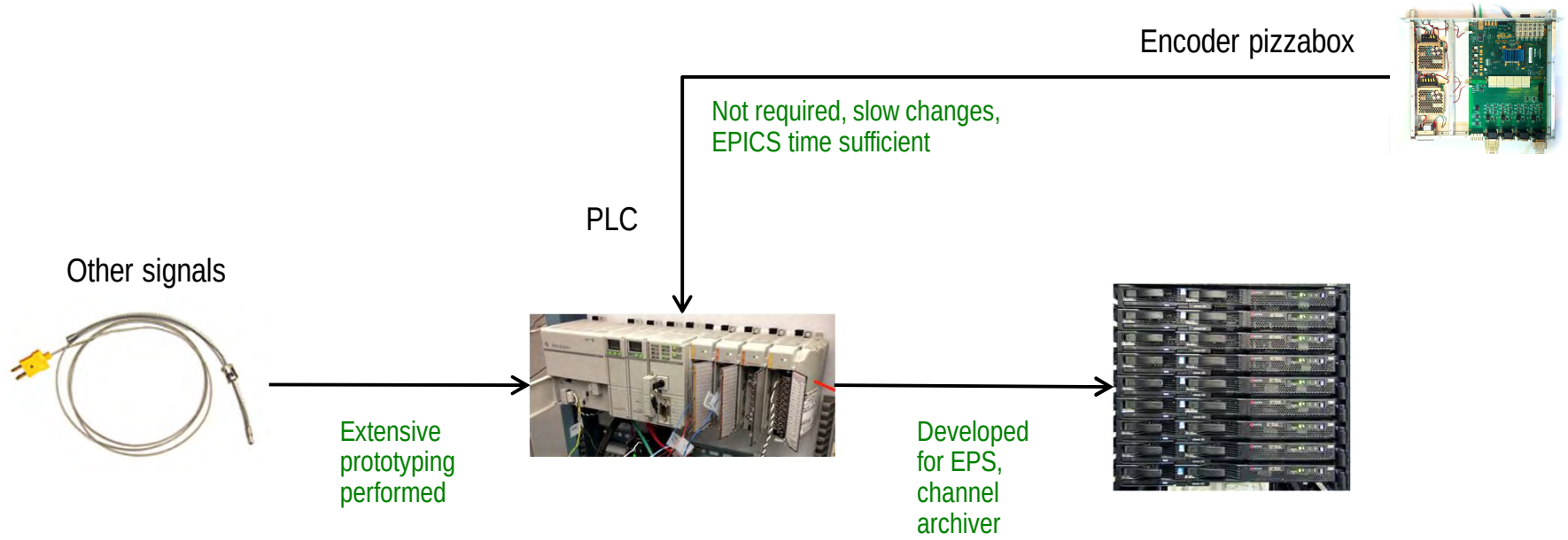

Current status - data visualization

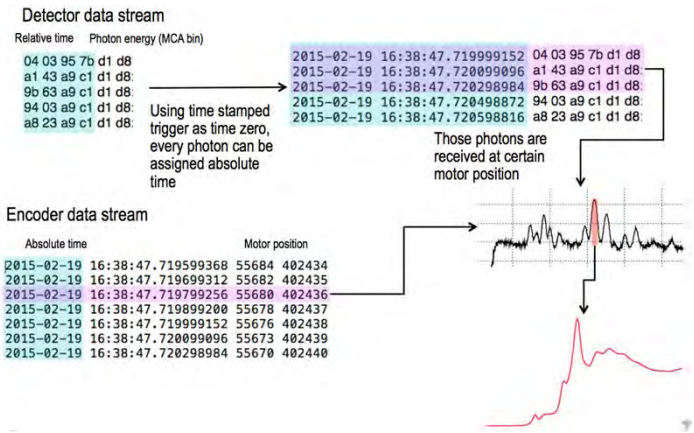

DAQ server

Data visualisation software to be developed, not in the scope of the project

User station

ISS DAQ summary

- All packages for DAQ system have been ordered, most delivered
- Proposed DAQ strategy reflects the scientific goals of the beamline
- Remaining tasks
  - Triggering of detector readout electronics
  - Development of EPICS layer for detector data
  - Development of the analog signal readout electronics

- Major risks:
  - Data visualization software
    - Large amounts of data will be generated, especially from xD detectors
    - Efficient software solution is required

Sample handling and treatment

Eli Stavitski
ISS Beamline Scientist
ISS Endstation Review
April 21, 2015

U.S. DEPARTMENT OF ENERGY

BROOKHAVEN NATIONAL LABORATORY
BROOKHAVEN SCIENCE ASSOCIATES

Overview

- Area layout
- Sample preparation area and its interface with experimental station
- Sample preparation and transfer to the hutch
- Sample handling system
- Sample treatment inside the experimental station

Area layout

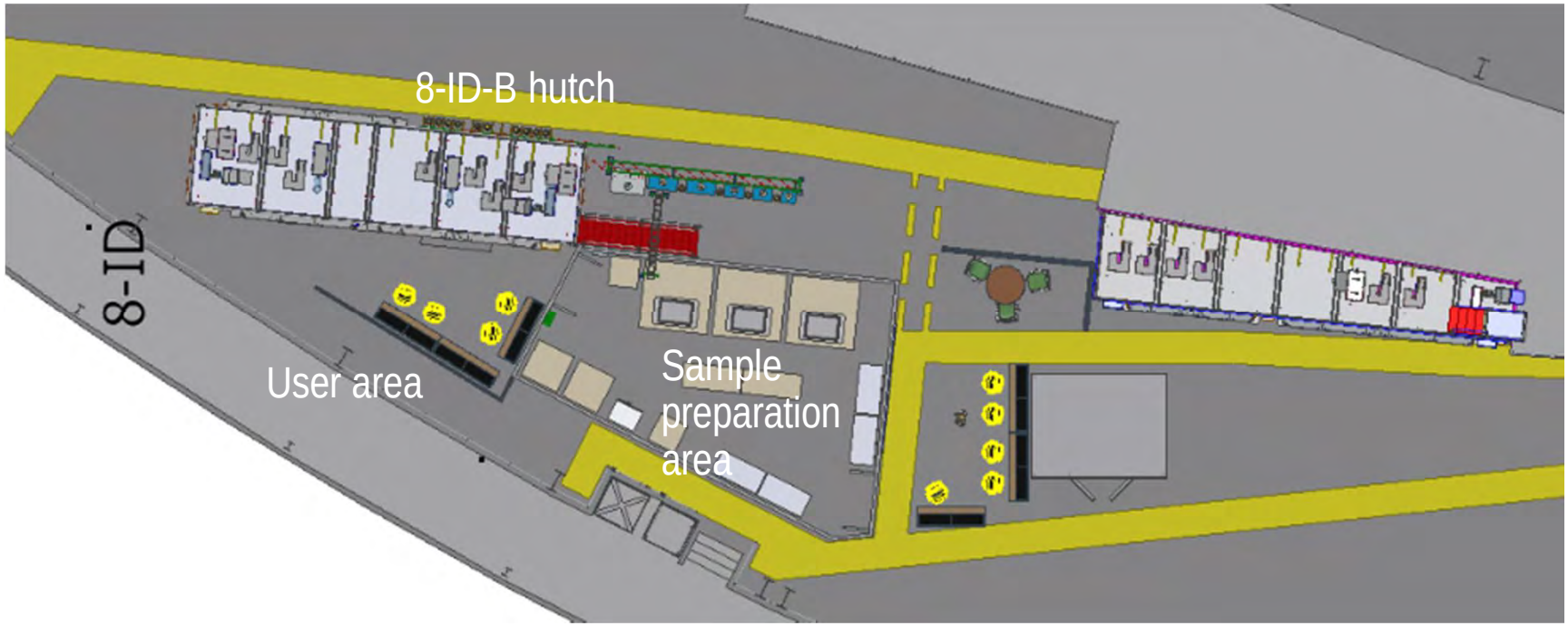

- Remark: egress route layout has been approved

Sample preparation area

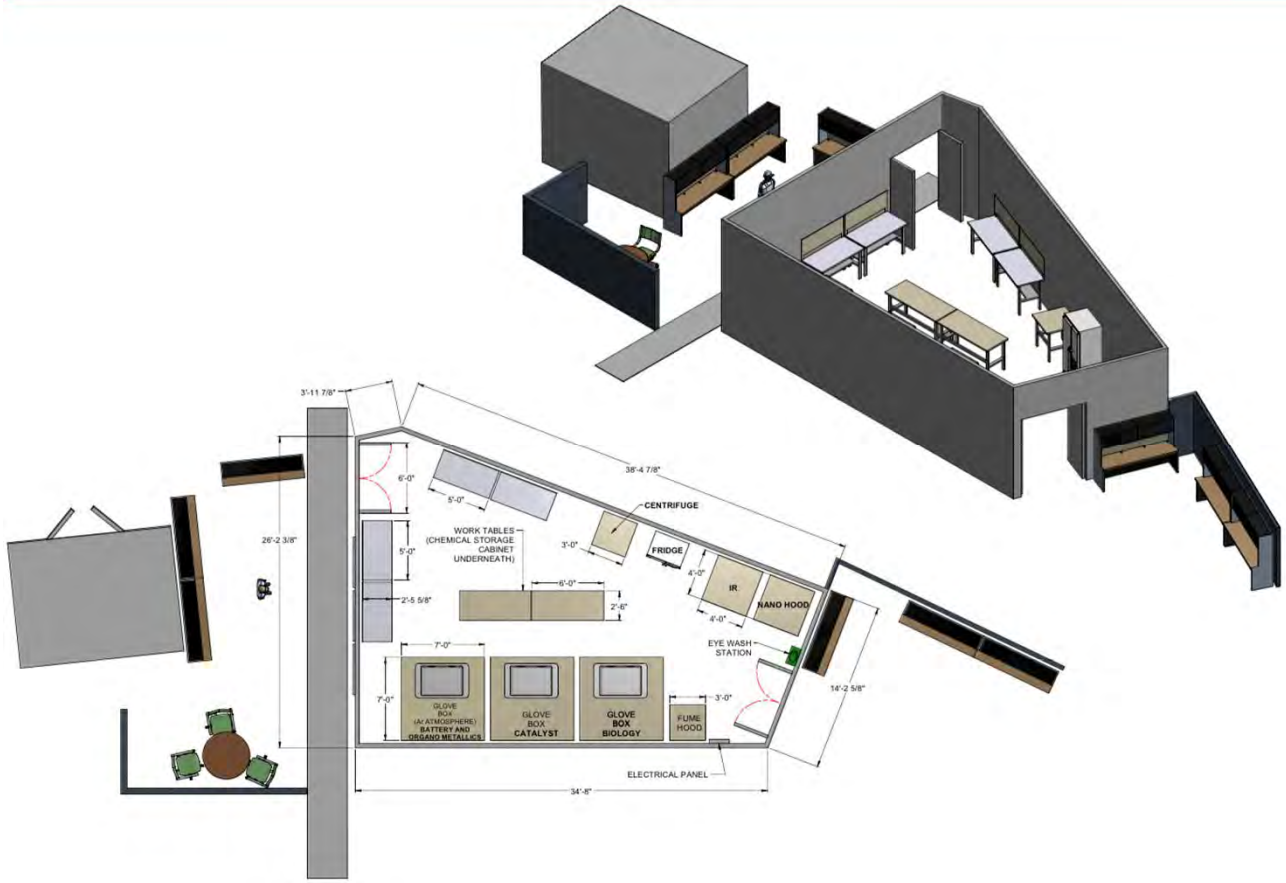

- This area is populated by the equipment required for sample preparation, pretreatment and characterization prior to the experiments

Sample preparation area

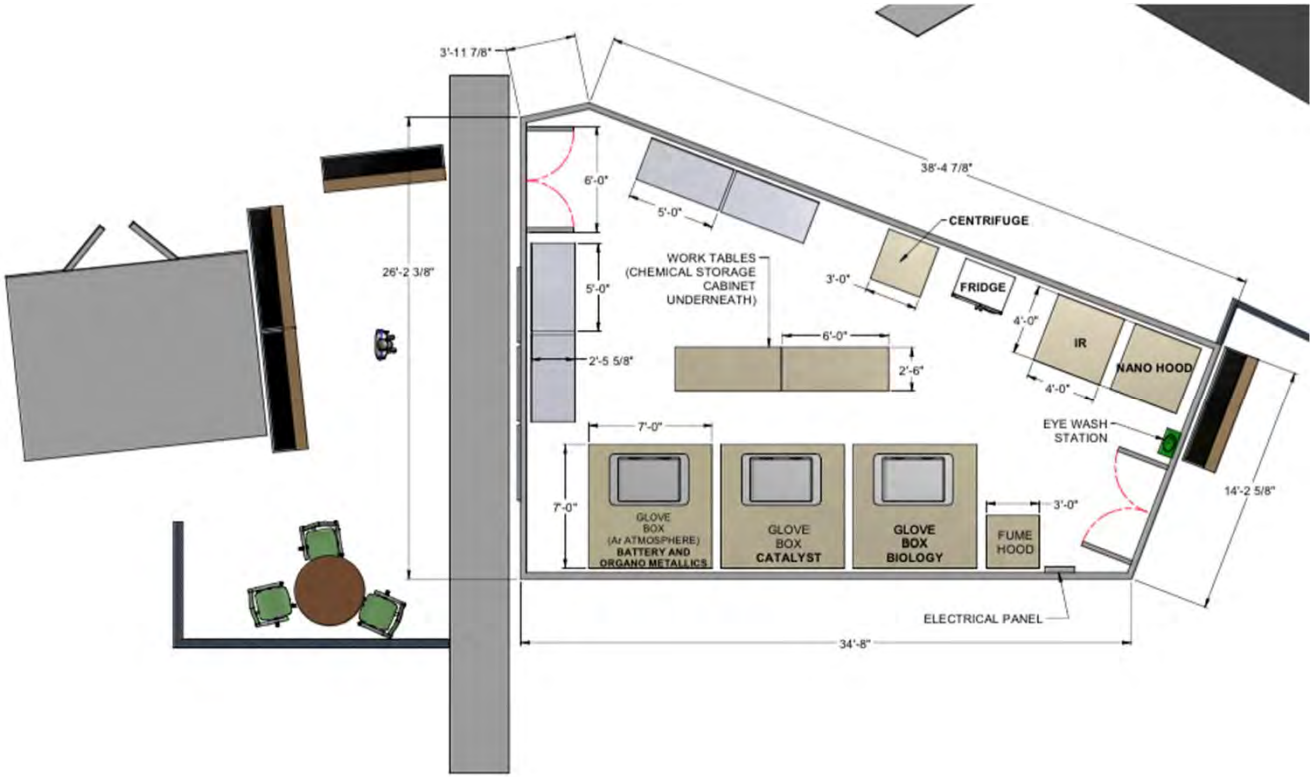

- Gloveboxes will serve different user communities (catalysis, batteries, biology) allowing sample preparation in inert environment.
- Spectrometers will be available for sample characterisation

Sample handling strategy

1. Sample(s) is prepared in a glovebox and pretreated as necessary
2. Samples are loaded into the sample transfer magazine, connected to the glovebox
3. Transfer magazine is moved into the experimental hutch and connected to the sample chamber
4. Automated sample exchange mechanism delivers samples into measurement position in the sample chamber

Sample handling strategy

- Samples are exposed to vacuum or inert gas at all times
- Sample magazine and sample chamber act as “double containment, allowing to work with hazardous materials
- Requirements on sample encapsulation may be reduced

Sample handling system

- ISS procurement package, due to be posted on FedBizOps this week
  - Sample transfer magazine with transport card
  - Interface chambers with glovebox and sample chambers to equilibrate vacuum or inert gas environment, vacuum parts and controls in support thereof.

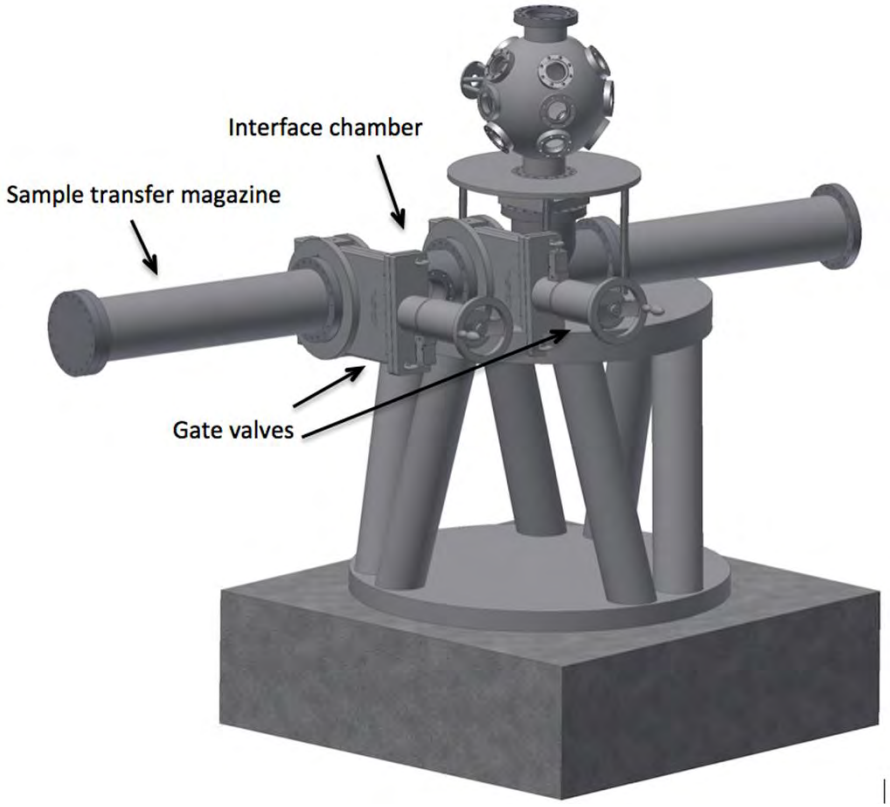

Sample exchange mechanism

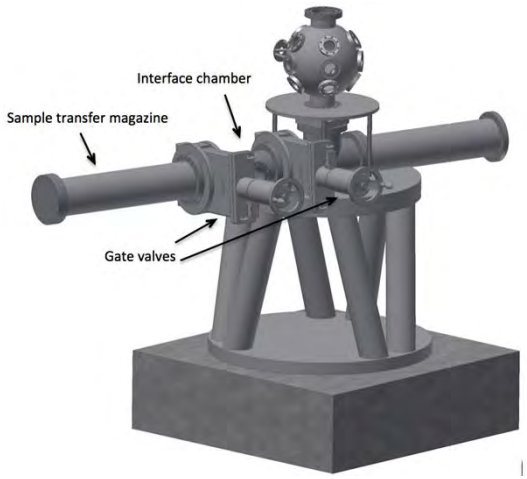

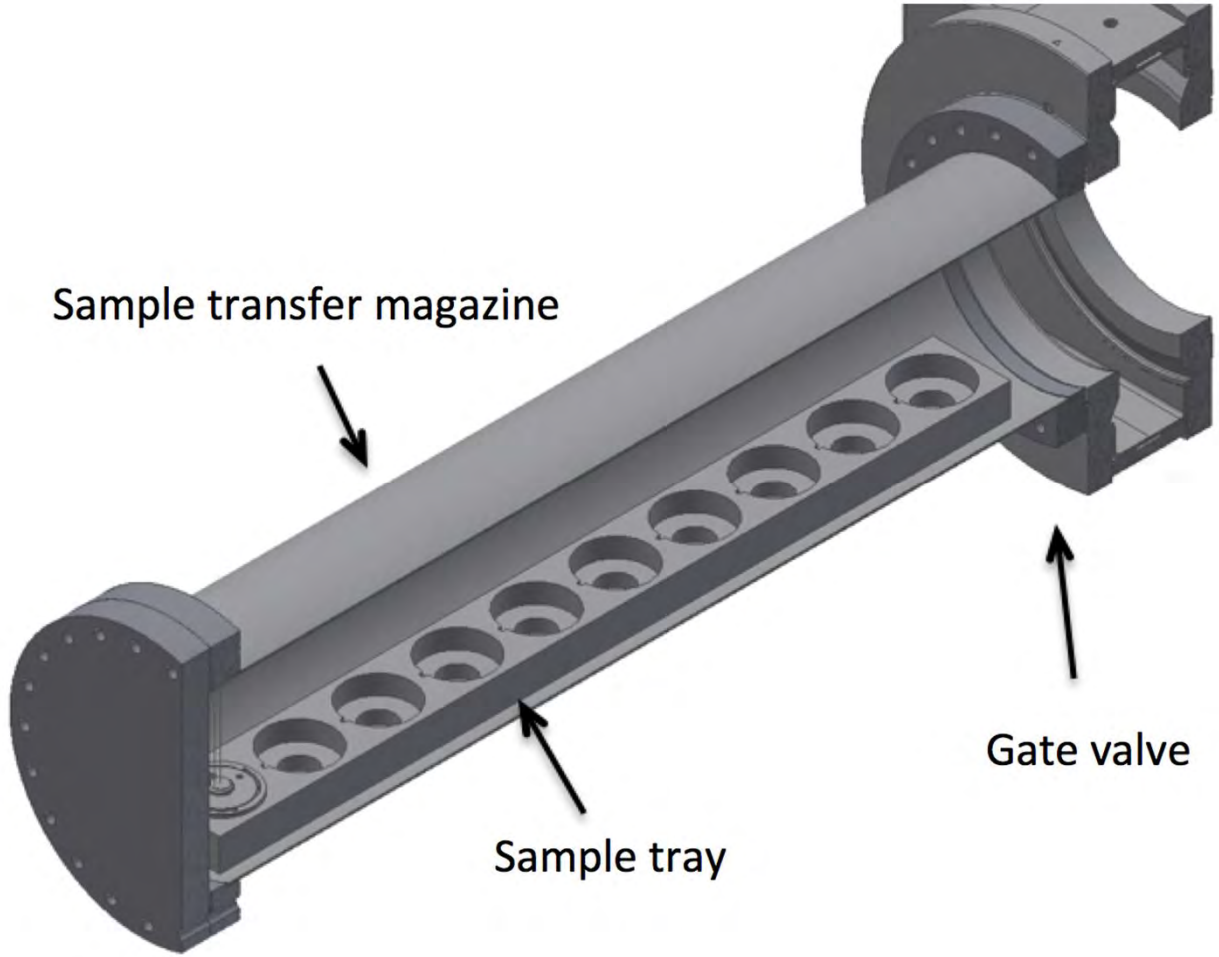

Sample exchange mechanism

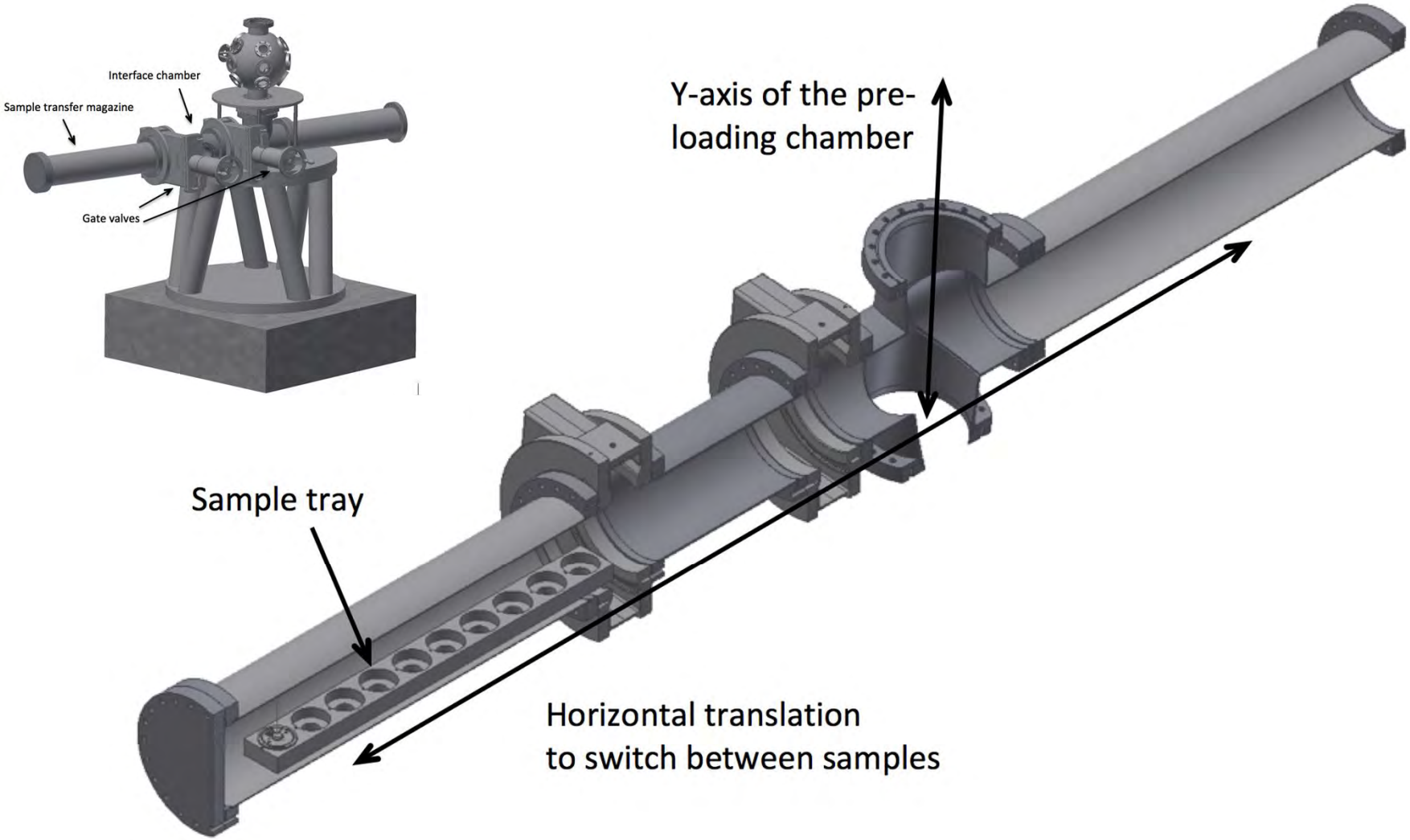

Sample exchange mechanism

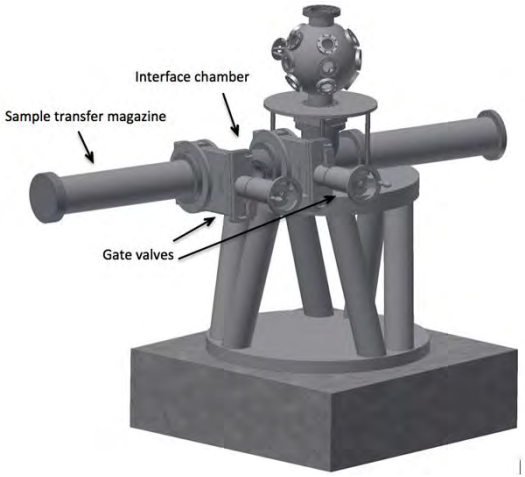

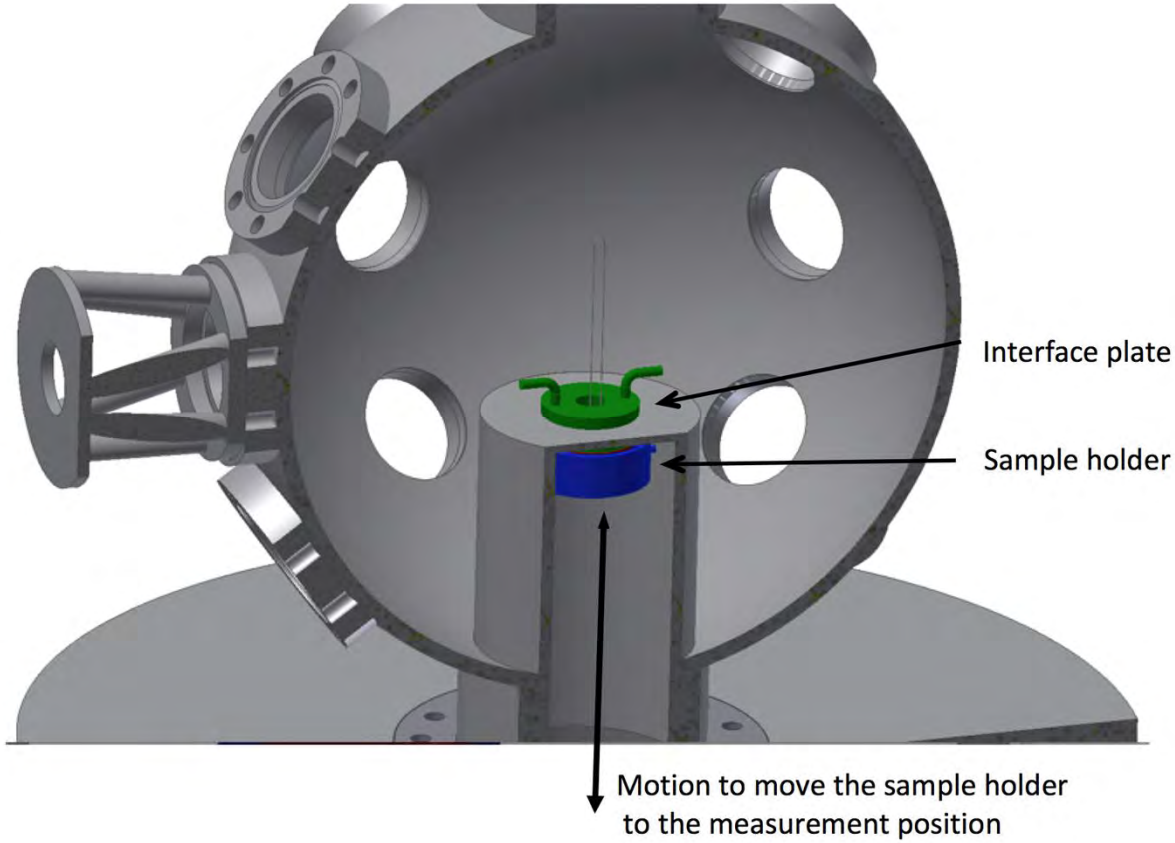

Sample handling system

- Procurement on the way
- Complexity of the system is a manufacturing risk
  - A prospective vendor has been identified

- Concept can be easily extended to sample preparation outside of the ISS environment
  - Will allow for mail-in programs (with full sample containment)

Sample treatment requirements

- ISS scientific goal is to “Investigating correlations between structure, chemical composition and functionality in real worlds materials under realistic environment”
- ISS user community will include:
  - Heterogeneous catalysis
  - Battery materials
  - Fuel cells
  - Biological and bio-inspired materials

Sample treatment requirements

- In order to perform in situ and operando experiments, one should be able to carry out
  - Gas treatment of the sample
  - Heating (RT-700 ºC)
  - Cooling (RT-77 K)
  - Application of controlled electric currents
  - (Analysis of the gas products downstream of the reactor)

Sample holder principle

- Universal sample holder, providing support to a reactor, electrical and gas connection

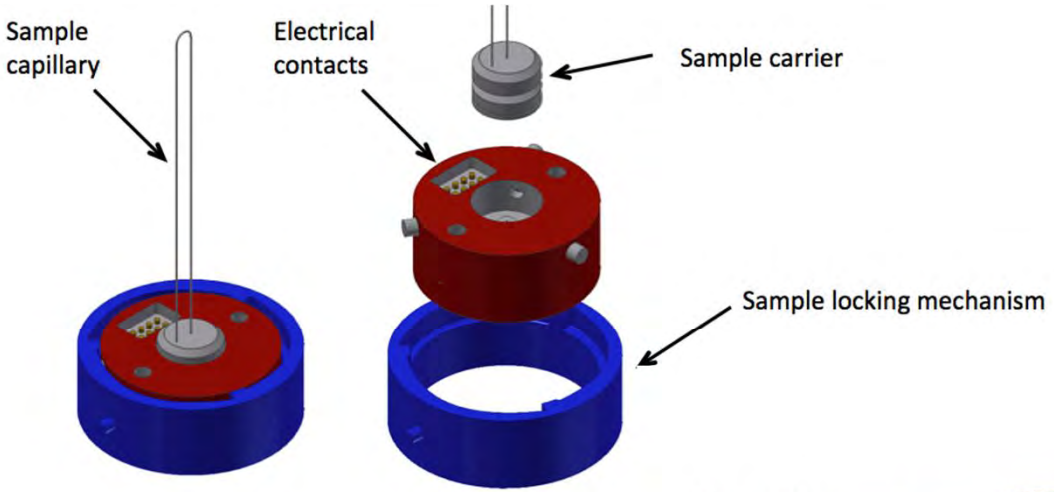

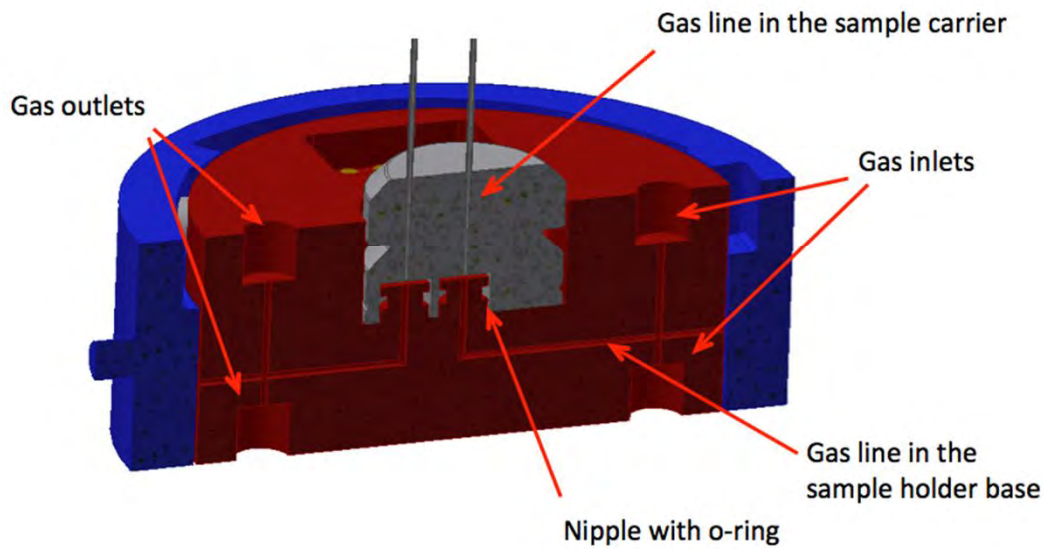

Interface with the sample chamber

- Sample will be positioned into the sample chamber (Sample handling system)

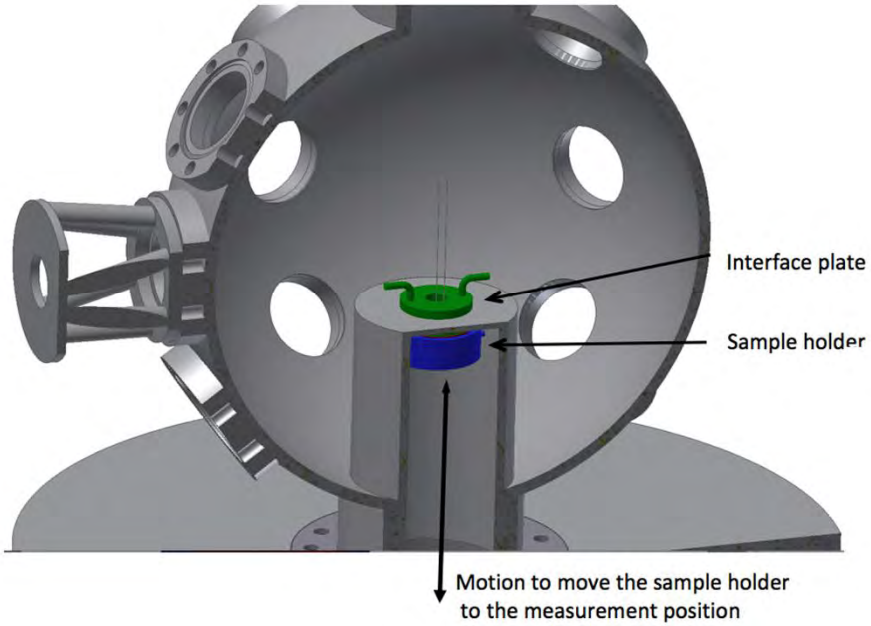

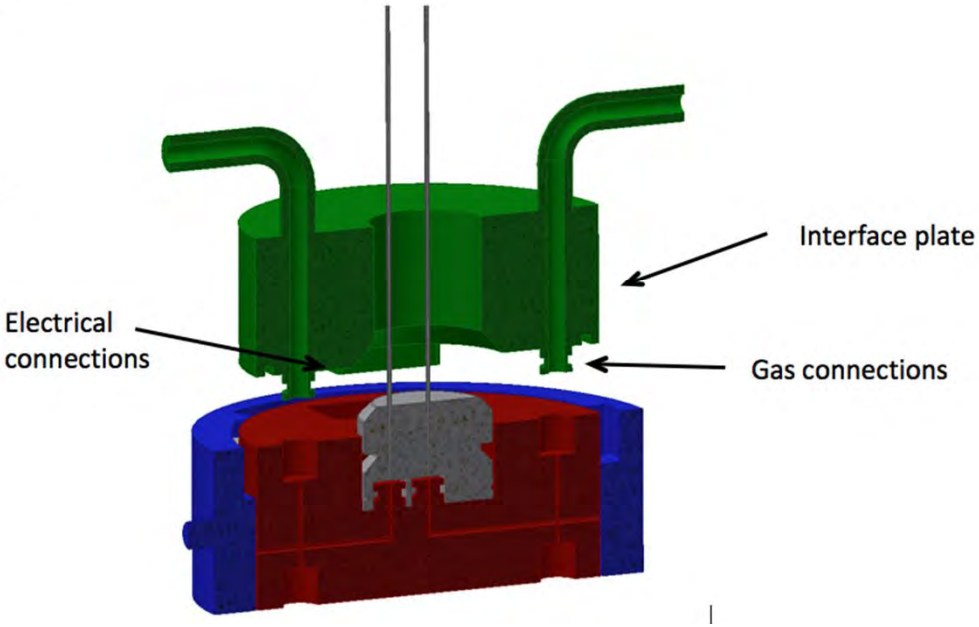

U.S. DEPARTMENT OF ENERGY

Gas handling system

- Gas handling system (GHS) at ISS beamline is an integral part of the controlled samples environment, allowing to execute cutting-edge experiments in the fields of chemistry and material science
- GHS design should be modular to include the future possibility to feed sample environment systems at QAS and TES beamlines, reducing amounts of gases stored on NSLS-II experimental floor.
- GHS will allow delivery of 13 gaseous materials and various liquids as vapors to the sample, including:
  - Inert: CO_2, N_2, He
  - Oxidizing gases: O_2, NO_x
  - Reducing gases: H_2, CH_4, C_2H_6
  - Toxic and corrosive gases: NH_3, CO, No_x, silane, phosphine, arsine

Design guidelines

- Gas flow rates:
  - 1-100 cc/min (compatible with typical experiments in heterogeneous catalysts and fuel cell experiments
- Flow rates accuracy:
  - Better than 1%
- Switching rates
  - Changes in gas concentration delivered to the sample position should be performed in 10 sec or less
  - Ultra-fast switching for modulation experiments: rates of 1 s or better
- In-line gas analysis
  - Mass spectroscopic analysis of gas mixture composition upstream and downstream of the sample for *operando* experiments

Procurement and review strategy

- Involvement of Photon Sciences ES&H, ESP and PPS groups and BNL SMEs (incl. BNL pressure safety, emergency response, fire protection) from the conceptual design stage
  - Review of the RFP documents (5/1/2014)
  - Award (9/2/14)
  - RFP included the requirement for a NYS PE to stamp the drawings and the design.
  - Preliminary and final design review meetings (12/10/15) were attended by all relevant parties and many recommendations have been made.
  - All recommendations are reflected in the current design.
  - Pre-FAT QA audit is on 4/4/15, and FAT is scheduled for 5/15/15.
  - On track for delivery & installation in June

ISS GHS P&ID

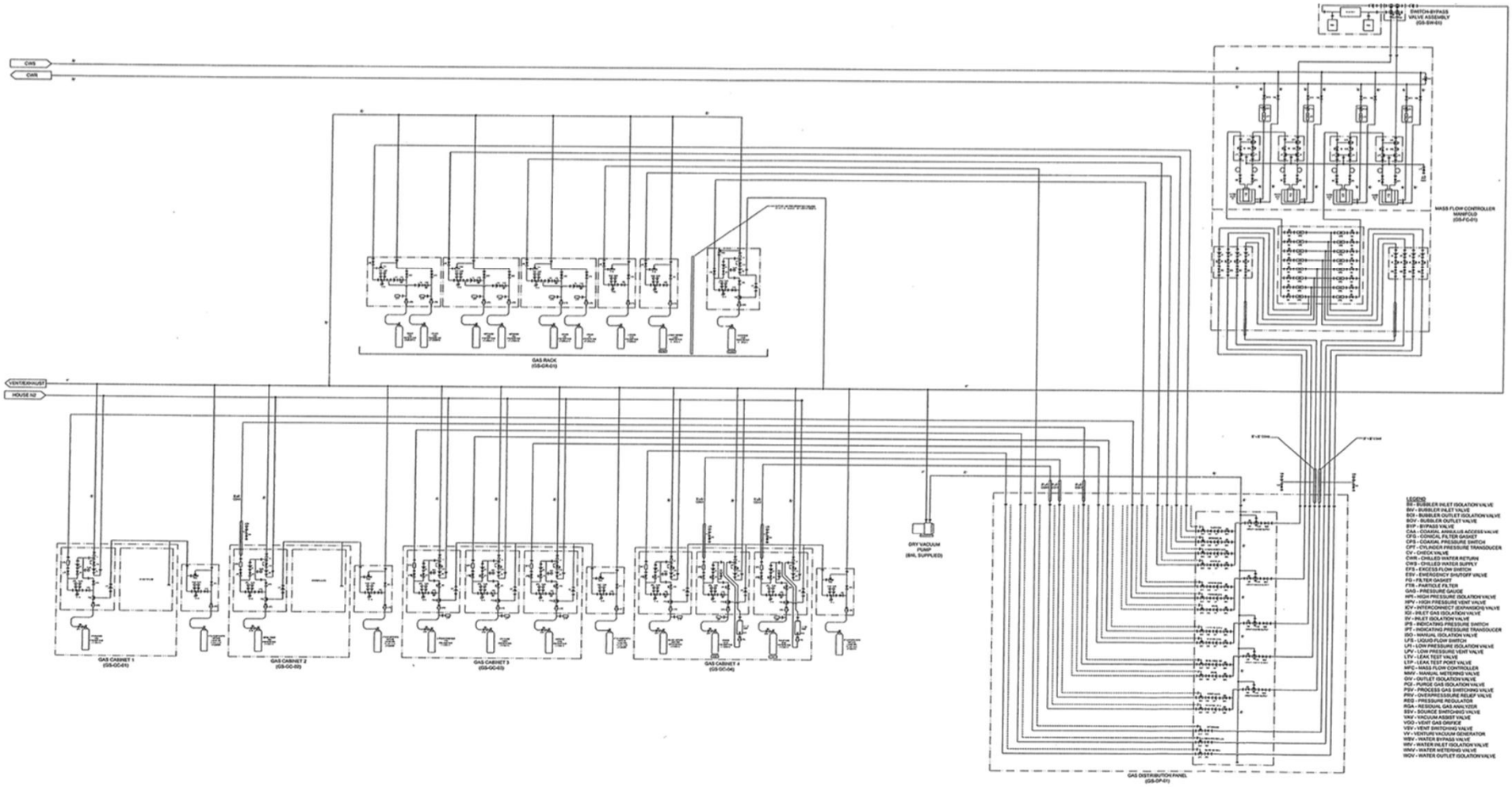

U.S. DEPARTMENT OF ENERGY

BROOKHAVEN NATIONAL LABORATORY
BROOKHAVEN SCIENCE ASSOCIATES

GHS floor layout

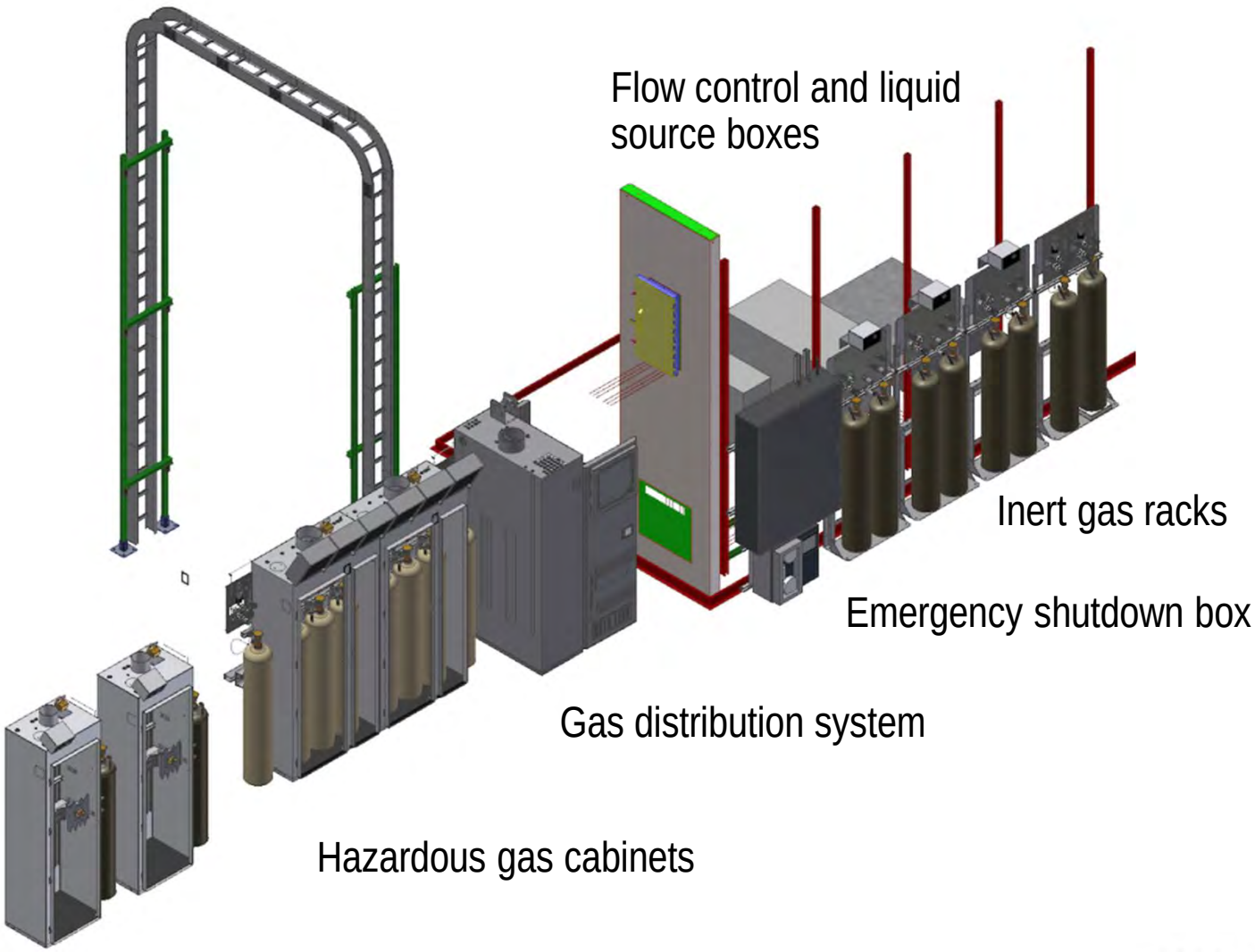

Integration with controls and utilities

- PLC-based controls system (contract amendment) is fully integrated with the beamline controls (controls group to provide EPICS interface)
- Safety-rated PLC of the emergency shutdown panel will be integrated with beamline EPS as well as the area fire protection panel.
- Remote monitoring and disabling (from the control room) will be implemented
- Sprinkler water supply will be connected to the GHS components
- Shutdown system is powered by emergency power
- Will be connected to the BNL exhaust system (in the scope of the contract)

Mitigation of ES&H concerns

- Industry standard safety system is implemented
- Sensor system is designed to meet DOE hazardous materials detection levels (stringer than Fire code or OSHA)
- Highly toxic gases will be diluted (as such can be designated as toxic).

GHS summary

- Extensive scope of the GHS makes it (one of) the most versatile available at the synchrotron facility, in support of ISS mission
- The design is mature and the system will be the first “big” package to be installed
- Design of the interfaces with beamline controls and utilities constituted an important part of the design review process.

- Operation procedures have to be developed, and a review process has to be established
- Many aspects which are not limited to the beamline
  - Procedure for gas transport from storage area to gas cabinets
  - Special inventory system has to be developed to maintain amounts of toxic chemicals in the experimental area under allowed limits

Sample heater

- Sample will be heated with a near IR laser, focused in the the spot according to the sample geometry
- Delivery of the laser light using a optical fiber into an enclosed sample chamber may permit to classify the system as Class 1.
- Preliminary tests by a potential vendor (Apollo Instruments) have proven the feasibility of the approach

- Procurement of the laser system will be completed in Fall 2015. Off the shelf part, unlikely to be a schedule risk
- Remaining risks
  - Integration with the sample chamber and temperature control
  - Engineering design review of the heater system
  - Operation procedures have to be developed and reviewed

Sample cooling system

- Sample will be cooled by the helium gas with is precooled by thermal exchange with LN2
- Cryostat system will be designed. Sample chamber vacuum will act as the isolation vacuum for the cryostat

- Remaining design challenges:
  - Integration of the optical windows for the laser heater in the cryostat
  - Engineering design review of the cooling system
  - Development and review of operation procedures

Future extension

- Sample pretreatment in the sample transfer magazine
- Two sets of connectors in the sample holder
- Connectors in the sample tray are not in the basic scope

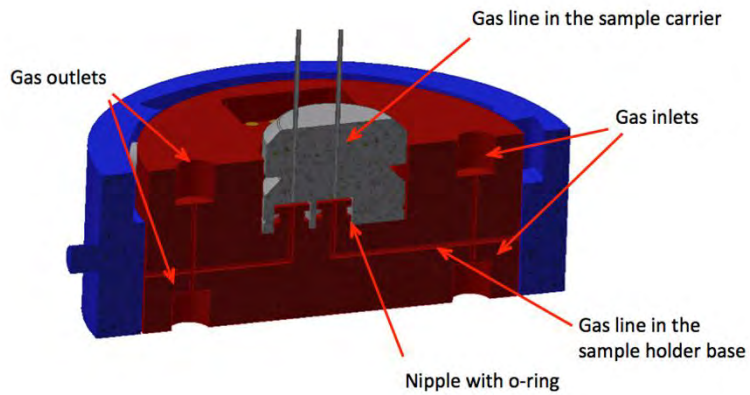

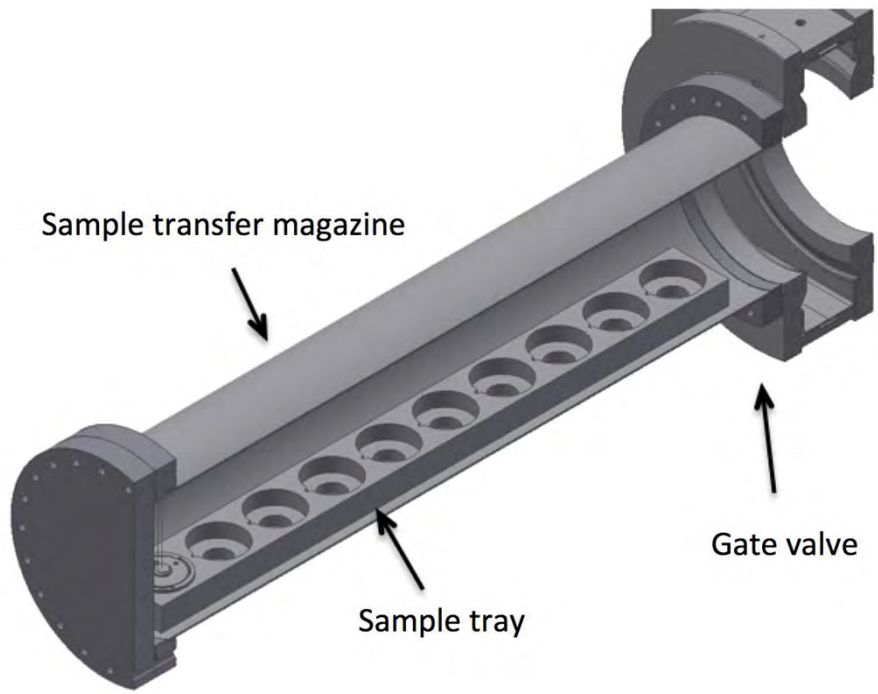

Charge questions

- The sample handling and treatments system fully support the ISS mission, by providing unique versatility, high throughput and detection efficiency to the beamline
- Major technical risks
  - Similar timeline for three integrated packages: requires close communication with vendors
  - Incomplete design of sample heater and cooler: engineering effort will be dedicated
- Procurement: GHS is nearing delivery, SHS RFP is ready to be postied.
- ES&H: Development and review of operation procedures will be required
- Interface with common: partially executed by the vendor, additional internal effort is required
- Interface with controls: fully within vendor's scope
- IRR: these systems' review is not the part of the IRR