NSLS-II 2-ID (SIX) Endstation Review

Meeting Date: May 5, 2015

The objective of this review is to assess the status of the NEXT endstation final design for the SIX beamline and its readiness to proceed to, or continue with, the construction phase. As of April 2015, most of the major endstation procurements are progressing and are expected to be awarded in the third quarter of FY15 and a number of smaller procurements and in-house design/build components remain to be completed. The review will identify any major residual design risks that must be mitigated prior to the start of full construction. It will also present an opportunity for support groups (Utilities, Safety Systems, Controls, ES&H, QA) to review the endstation designs as a whole and identify potential issues.

SIX (2-ID) Endstation Review Panel Charge Questions

1. Does the endstation's portion of the project performance baseline address the beamline's scientific program objectives? Yes - Based on the presented material the endstation meets the performance baseline. Is the endstation final design technically mature, sound, and likely to meet the performance expectations identified in the project performance baseline? Partially – However, there is an enormous amount of integration that is needed and some components of the design need to mature significantly. The addition of the M7 mirror mitigates a number of the risks achieving the 10 meV resolution goal; however all of the implications on the spectrometer mechanical and optical design and alignment should be addressed. Not enough design details regarding the mechanical linkage between 3AA and DAA. The proposed modification to the optics design is innovative and achieves a more workable solution.

2. What are the major residual technical design risks, and are appropriate steps being taken to manage and mitigate these risks? The triple rotating flange (TRF) is a design risk because of the size and integration of the motion controls. There is a concern with multiple procurements in place where numerous companies are independently building individual components. This appears to be an interface management issue. There is a concern that the sample transfer system needs to advance (e.g. motion controls, automated transfer may hinder manual operation). The shared design approach with ESM mitigates considerable amount of risk. On the sample goniometer, the 2 micron sphere of confusion (SOC) may be over-specified. The SIX team should re-evaluate the factors that drive this level of performance on the SOC of the sample stage. The SIX team has recognized that sample and optics alignment will be critical for maintaining the world-leading resolution of the spectrometer during routine operations (i.e. during movement of the spectrometer to access different energy ranges and momentum transfer). While the review panel is confident that the team will develop a workable solution, it may be useful to review this procedure with a subset of the review team to ensure that necessary optical alignment mechanics are in place. Accessibility for maintenance in the primary experimental chamber should be a design priority.

3. Is the design effort consistent with the planned procurement/fabrication strategy and sufficiently mature to support procurement/fabrication of major components? The vacuum system is under developed primarily for the sample chamber.

4. What ES&H/QA issues and risks remain to be addressed, if any?

Most ESH issues have been addressed. SIX needs to evaluate personnel protection against moving components. No major QA risks were identified. Refer to comments and feedback section for general QA comments.

5. Have the interfaces between endstation subsystems and Common Systems and Beamline Controls been identified and detailed sufficiently to support successful endstation construction? Identification of the interfaces between endstation and common systems was not discussed.

6. After construction and assembly, will this beamline's endstation(s) be able to sustain Instrument Readiness Review and lead to successful operations? Yes - The instrument design itself. However, SIX needs to assure that all of the appropriate documentation is ready and unreviewed ESH issues have been resolved. Refer to comments and feedback section for general QA comments.

Comments and Feedback:

In general a number of questions were asked by the review panel and attendees in regards to the design and operational feasibility of the endstation components based on the information provided in the presentation. The SIX team provided responses to show how and why the system will work as intended as well as limitations of the system components. Such questions addressed the vacuum system requirements, stability of equipment, detectors, engineering and controls support, assembly of components, ordering of components, installation of the components, safe use of equipment, and ease of use of the end station equipment.

The reviewers provided additional comments and feedback below in the areas of scientific, engineering, ESH, QA, controls, vacuum, assembly/installation, and utilities. The SIX Team should consider the feedback provided in the completion of the endstation design.

Scientific:

In term of energy resolution, the proposed instrument should overwhelm by 10 times the performances of the currently available ones (and 3x the ones currently under construction and already in a more advanced status). The optical design chosen, and in particular the recent improvements, makes the instrument design essentially unique and by far less prone to problems of stability and vibrations than the others.
Together with the technical challenges (triple rotating flange, sample stability and spectrometer alignment) the beam stability at the sample and its power density raise some questions. However, the incredible work done by the beamline team and their very positive attitude in terms of achievable risk mitigation (sample cryogenic stages and motions, detector resolution, positioning and vibration, spectrometer operation mode), alternative solution exploration (optics, sample chamber) and their involvement in figuring out and analyzing risks and possible sources of problems (vibrations, quality and

finishing of the optics, detector effective resolution, centroid algorithm access, polarization analyser operation) crucially contribute in building up a reasonable confidence on the scientific output expected for this instrument, essentially from day 1. [CM]

The scientific goals of SIX will not be met without both a photon delivery system (PDS – commonly referred to as "beam line") and emission spectrometer that push the capabilities of soft x-ray optics and supporting structure to the extreme edges of the state-of-the-art. The end station review did not cover the PDS and is limited to the sample chamber and spectrometer. It should be realized that the spectrometer alone has an optical system whose complexity rivals and perhaps surpasses that of the PDS, particularly when one considers that the PDS does not have to swing through an arc of 120 degrees. The SIX team must be commended for their ingenuity and detail-oriented meticulousness in analyzing the requirements for the optical performance and stability of the spectrometer that will enable meeting the ambitious scientific goals. Particularly noteworthy is the modification of the Hettrick-Underwood (H-U) optical design. The original H-U design would have required a considerable vertical translation of the detector in addition to the other degrees of motion because the vertical focus of the spectrometer would be energy-dependent. The new optical design (modified H-U) incorporates an additional mirror (M7) that can be operated so that the exit beam height of the spectrometer is independent of energy. It is much more likely that the modified H-U design will result in an engineering solution that will meet the stability requirements to achieve the goals of the SIX PDS + spectrometer.

The modified H-U design closely resembles a plane grating monochromator (PGM). The main optics supplier (Bestec GMBH) has extensive experience with this monochromator design and this will increase the probability of a successful completion of the project. One aspect that was not discussed extensively in the review was the potential ramification on the schedule of the addition of M7 to the optical design of the SIX spectrometer. It should also be noted that the addition of M7 will reduce the flux on the detector by about 50%, leading to longer count times. However, this reduced flux must be weighed against the likelihood that the original H-U optical design would achieve the goal of a resolving power (RP) of 100,000 (PDS + spectrometer) once stability and vibrations are taken into account. The new modified H-U design is considerably much more likely to achieve the RP necessary to achieve the scientific goals of SIX.

An area of concern is the interfaces between the various components of the end station and spectrometer, particularly as the components are often the responsibility of different vendors. To achieve the goal of a RP of 100,000, it is simply not feasible to demarcate "areas of responsibility" and "stay clear" zones, which would be the typical approach to handling interfaces between different suppliers. In certain cases, the interfaces will be interpenetrating in three dimensions and a close eye must be kept on overall system integration to avoid potential interferences. The SIX team is certainly well aware of these issues and there is a very high likelihood that physical obstructions and interferences will be avoided with the supervision of the SIX team. [DA]

1. The design of the vacuum vessel on the main sample chamber *must* take maintenance into account. Access through a small flange will make event routine maintenance difficult or impractical. The SIX team should consider a chamber design that permits relatively easy access to the sample area and spectrometer optics. This will be particularly important as the current design effectively incorporates two different sample manipulation stages, or SMS, to accommodate the two cryostats. Changing between the two SMS requires decoupling the

cooling braids to one of the sample stages. This will be an important and delicate mechanical intervention that will be performed on a routine basis.

2. The flux density on the sample will be quite high, with a resulting energy density in the neighborhood of 10^6 W / m^2, and possibly even higher for the lower resolution operating modes of the PDS + spectrometer. This may require some strategies for minimizing radiation damage to the sample, such as sample rastering. Two related issues come to mind if sample rastering is introduced: (a) sample homogeneity will become a much more important consideration and (b) stability requirements on sample motion during rastering should be evaluated.
3. The detector assembly s presented utilized large 8" Con-Flat™ flanges (CFFs). It is not clear why smaller CFF's cannot be used and this may reduce the weight of the detector assembly.
4. A potential upgrade includes additional detector assemblies for polarization analyses. Given the stringent stability requirements to achieve the desired RP, FEA analyses of vibrations with the off-center mounting of the additional detector assemblies should be considered.
5. On the sample goniometer, the 2 micron sphere of confusion (SOC) may be over-specified. The SIX team should re-evaluate the factors that drive this level of performance on the SOC of the sample stage.
6. The SIX team should consider slowing down the animation of the triple rotating flange (TRF), or at least making it very clear in presentations that the speed of the animation is far, far greater than the actual operating speed of the TRF. [DA]

--

I was glad to see a scheme for spectrometer alignment included, but I would have liked to review a more detailed plan with a list of which parameters are expected to require detailed tweaking.

Similarly, I would have liked to see some more discussion about what can be done to return to previous configurations in a timely manner. I.e. to what extent it might be possible to use inclinometers/encoders (although I appreciate there might not be suitable solutions).

Upon changing the spectrometer tth, which parameter will be tweaked to correct an imperfect COR.

The procurement of the TRF is a concern. In the case that this component is delayed, could a simple plate be developed to operate at fixed tth. This would help significantly with mitigating risk. [MD]

I concur with comments made by other members of the review team. I would commend in particular the project team for coming up with a novel solution - the addition of M7 - in the optical scheme of the spectrometer, which allows to position the detector chamber at a height that is much more manageable in the realization of the spectrometer mechanism and in terms of dealing with the stability required to achieve the scientific goal of 10 meV at 1 keV, albeit at the expense of some reduction of the achievable flux. Other pros and cons in doing so have been very well studied by the project team, and the pros clearly outweigh the cons.

Nevertheless, there are some areas of concern, which I think the project team should take into consideration in moving forward:

1. The stability requirements have been driven primarily by maintaining the static alignment of the optical system within 1/10 of the ultimate resolution of the spectrometer, which translates into thermal and vibrational stability requirements of the spectrometer. Similar requirements should be considered for the spectrometer in moving to a new position (to a different q, for example) to the extent possible. Lesser requirements have been argued on the basis that the optics can be realigned after the spectrometer has been moved to a new position. This in principle is a workable solution, but will require beamline staff intervention due to the complexity of the optical system, which will limit their ability to automate the experiments, particularly during user operation.
2. The requirements on the sphere of confusion probably need more thought, if automatic operation on the spectrometer is envisioned. The requirements should be determined not only by the need to maintain the optical alignment of the spectrometer, but also by the sample system (homogeneity, grain/domain size, probing depth, etc) used in the experiment.
3. In the current design of the spectrometer, the parabolic mirrors are decoupled mechanically from the rest of the optical system of the spectrometer. This is an essential feature of the alignment procedure of the optical system of the spectrometer, but at the same time it could be a source of instability in maintaining the optical alignment in operation, even in static conditions. Method to implement feedback control may be required.
4. The control of the optical elements in vacuum may present additional challenges, and should be looked at as early as possible. Thermal management of steppers should be examined carefully if they are required for routine operation.

<u>Engineering</u>:

Satellite Building 2 is designed well for functionality of the experimental floor and service area.

The multiple procurement packages that comprise the endstation will require careful management to interface each component within their allocated footprint considering the tight spatial constraint.

The rear access port on the sample chamber is undersized to allow adequate working space and limits visual inspection to reconfigure the sample environment. The cryostat and cold finger will require lift points and a plan in place with the limited access from the back of the sample chamber with the ion pumps installed.

Failure analysis for the sample transfer system should include all possible locations for loss of sample during the transfer and mounting process to develop a scheme for sample retrieval in critical or inaccessible locations along the transfer system. The diffractometer Ø-rotation stage should be able to withstand the forces imposed by the automated sample mounting system. Loss of samples at the interface of the diffractometer could result in the sample holder falling below the diffractometer's

support causing damage to the ϴ rotation and/or bellow beneath the optics wheel. A simple capture plate at the base of the tilt motions could prevent potential damage

ESH:

Most ESH issues identified at this point in the development of the endstation have been sufficiently evaluated. There may be other issues found once the design is finalized.

Users will be allowed to move the spectrometer arm, operate the cryostat, change and align the sample. Instructions/procedures or operator aids will be needed to allow safe operation.

The TRF needs to have guards or barriers in place to protect personnel access while moving.

QA:

Design review(s) for A1/A2 equipment needs to be completed, documented, and actions closed. A top level traveler that verifies installation/commissioning readiness needsto be developed and executed. Operating procedure/manual needs to be developed and personnel trained on it. All these items need to be completed prior to an IRR.

Vacuum:

I see advantages to the triple rotating flange design in principle over the prior design by eliminating repeated seal exposure to atmosphere. It would be beneficial for a detailed vacuum review of this technology as it is currently used in existing rotary seals. Looking at any existing manufacturer information such as dynamic leak rates, reliability and wear would give some assurances for scale up. It may be beneficial to witness the largest version of this seal in use at other facilities. If existing data from Thermionics, or from facilities with this seal in use, is not readily available or insufficient, it may be beneficial for NSLS-II vacuum engineers to obtain and test an existing rotary seal of this type at BNL to measure dynamic leak rates. This would allow reasonable predictions of scaled up performance and required pumping to obtain required vacuum level. A plan for witnessing factory vacuum tests of this seal should be made during the chamber manufacture process.

Having Thermionics responsible for meeting the vacuum performance of the Sample Chamber while Bestec supplies the internal elements could lead Thermionics to add additional cost. There are a host of internal materials identified during the review, such as Vespel, in vacuum motors, wire etc, all of which can be difficult to make accurate gas load estimates. Relieving Thermionics of the final vacuum performance requirements and requiring a more simplified “empty” chamber vacuum requirement (along with the TRS) could help here. It would then be up to NSLS-II Vacuum engineers to design and spec out the final vacuum pump configuration for maximum vacuum performance in final form. This approach should be considered.

The entire beamline up to and including the M7 chamber needs to be baked to meet design vacuum levels. The plan for how this work is carried out needs to be made. Much of the bakeout support work, even when required by the suppliers, can fall on beamline personnel. The manpower, equipment and time needs to be estimated and allotted for this.

The Vacuum group should be involved in developing the proper pumping, venting and interlock logic for the endstation sample transfer. A dedicated vacuum PLC (with local touchscreen) should be considered during the development phase of the sample transfer that can be easily migrated to the beamline.

Review Committee members:

M. Buckley (Chair)
Dario Arena (Science)
Yong Cai (Science)
Mark Dean (Science)
Claudio Mazzoli (Science)
Mary Carlucci-Dayton (Engineering)
Lori Stiegler (ESH)
Robert Todd (Vacuum)
Joseph Zipper (QA)

Attendees:

Refer to attendance sheet

7/24/2015

X

Michael Buckley
Research Operations Support Group Leader
Signed by: Buckley, Michael

Agenda and Charge for SIX (2-ID) Endstation Review

Date: 5th May 2015

Location: Bldg. 745 rm 156

The objective of this review is to assess the status of the NEXT endstation final design for the SIX beamline and its readiness to proceed to, or continue with, the construction phase. As of May 2015, most of the major endstation procurements are progressing and are expected to be awarded in the third quarter of FY15 and a number of smaller procurements and in-house design/build components remain to be completed. The review will identify any major residual design risks that must be mitigated prior to the start of full construction. It will also present an opportunity for support groups (Utilities, Safety Systems, Controls, ES&H, QA) to review the endstation designs as a whole and identify potential issues.

Time	**SIX (2-ID) Endstation Review**	**Speaker**
08:40-08:55	Executive Session (Review Panel)	
09:00-09:05	Introduction	Steve Hulbert
09:05-09:25	SIX Overview	Ignace Jarrige
09:25-09:55	SIX Endstation Optics	Joe Dvorak
09:55-10:00	Break	
10:00-10:10	SIX Satellite Building	William Leonhardt
10:10-10:50	SIX Endstation Mechanical Design	William Leonhardt
10:50-11:30	SIX Sample Handling and Detector	Valentina Bisogni
11:30-12:15	Executive Session (Review Panel)	
12:15-12:45	Close Out Session (Review Panel and SIX Team)	

Review Panel:
M. Buckley (Chair)
Dario Arena (Science)
Yong Cai (Science)
Mark Dean (Science)
Claudio Mazzoli (Science)
Mary Carlucci-Dayton (Engineering)
Lori Stiegler (ESH)
Robert Todd (Vacuum)
Joseph Zipper (QA)

The Review panel will address the charge questions during the 11:30-12:15 Executive session and then discuss the responses to these questions with the SIX team during the close out session. Following the review, a report will be developed addressing the charge of the review panel listed on the following page. The review panel chair will organize the preparation of this report. Comments are welcomed by the attendees during the review.

SIX (2-ID) Endstation Review Panel Charge Questions

1. Does the endstation's portion of the project performance baseline address the beamline's scientific program objectives? Is the endstation final design technically mature, sound, and likely to meet the performance expectations identified in the project performance baseline?
2. What are the major residual technical design risks, and are appropriate steps being taken to manage and mitigate these risks?
3. Is the design effort consistent with the planned procurement/fabrication strategy and sufficiently mature to support procurement/fabrication of major components?
4. What ES&H/QA issues and risks remain to be addressed, if any?
5. Have the interfaces between endstation subsystems and Common Systems and Beamline Controls been identified and detailed sufficiently to support successful endstation construction?
6. After construction and assembly, will this beamline's endstation(s) be able to sustain Instrument Readiness Review and lead to successful operations?

The committee is requested to present their findings, comments, and recommendations at the conclusion of the review, and to send a report to the NEXT project director within three weeks of the conclusion of the review.

NSLS-II
2-ID (SIX) Endstation Review
Attendance Sheet

Date: May, 5 2015

Name	Title	Department/Division or Company
[illegible]	Ras Editor Leader	NSLS - II
Ignace Jarrige	Physicist	NSLS - II
Valentina Bisogni	Physicist	NSLS - II
GILBERTO FABBRIS	RES. ASSOCIATE/POSTDOC	CMPMSD - BNL
JEFF KEISTER	Project Mgr	NSLS-II
BILL LEONHARDT	PRIN. ENGR.	BNL/ PM
Joe Dvorak	Physicist	NSLS-II
ROBERT TODD	VACUUM	NSLS-II
Claudio Mazzoli	Physicist	NSLS-II
DARIO ARENA	Physicist	NSLS-II
Mary Carlucci-Dayton	BL ENG GL	NSLS II
Lori Stiegler	ESH	NSLS II
YONG CAI	physicist	NSLS-II
Mark Dean	Associate Physicist	CMPMSD
Steve Hulbert	NEXT PM	NSLS-II.
SCOTT COBURN	ENG	"
JUN MA	ENG	"
Zhijian Yin	ENG	NSLS2
J. ZIPPOR	QA	NSLS 2

Overview of the Soft Inelastic X-ray Scattering Beamline

Ignace Jarrige
Level 2 Manager for SIX
Endstation Review
May 5, 2015

U.S. DEPARTMENT OF ENERGY | Office of Science

BROOKHAVEN NATIONAL LABORATORY
BROOKHAVEN SCIENCE ASSOCIATES

Outline

- The Review
- The Science Goal
- The Technical Goals
- The Concept
- Scope and Procurement Strategy
- Schedule at a Glance
- Contract Status
- Next Talks

The Review

Quite a few Final Design Reviews along the way:

- October 13: Informal Final Design Review of Beamline ✓
- October 13: Informal Final Design Review of Endstation ✓
- March 14: CD3A – DOE Final Design Review ✓
- August 14: CD3B – DOE Final Design Review ✓
- May 15: Final Design Review of Endstation II – *THE RETURN!*

The Review

Quite a few Final Design Reviews along the way:

- October 13: Informal Final Design Review of Beamline ✓
- October 13: Informal Final Design Review of Endstation ✓
- March 14: CD3A – DOE Final Design Review ✓
- August 14: CD3B – DOE Final Design Review ✓

Several design ideas that will be presented today sprung up after CD3, so hopefully this review will be worth your time ☺

- May 15: Final Design Review of Endstation II – *THE RETURN!*

The Review

The Charge…

- Does the endstation's portion of the project performance baseline address the beamline's scientific program objectives? Is the endstation final design technically mature, sound, and likely to meet the performance expectations identified in the project performance baseline?
- What are the major residual technical design risks, and are appropriate steps being taken to manage and mitigate these risks?
- Is the design effort consistent with the planned procurement/fabrication strategy and sufficiently mature to support procurement/fabrication of major components?
- What ES&H/QA issues and risks remain to be addressed, if any?
- Have the interfaces between endstation subsystems and Common Systems and Beamline Controls been identified and detailed sufficiently to support successful endstation construction?
- After construction and assembly, will this beamline's endstation(s) be able to sustain Instrument Readiness Review and lead to successful operations?

The Review

The Charge… stripped to the keywords

- Does the endstation's portion of the project performance baseline address the beamline's scientific program objectives? Is the endstation final design technically mature, sound, and likely to meet the performance expectations identified in the project performance baseline?
- What are the major residual technical design risks, and are appropriate steps being taken to manage and mitigate these risks?
- Is the design effort consistent with the planned procurement/fabrication strategy and sufficiently mature to support procurement/fabrication of major components?
- What ES&H/QA issues and risks remain to be addressed, if any?
- Have the interfaces between endstation subsystems and Common Systems and Beamline Controls been identified and detailed sufficiently to support successful endstation construction?
- After construction and assembly, will this beamline's endstation(s) be able to sustain Instrument Readiness Review and lead to successful operations?

The Science Goal

COLLECTIVE ELECTRON BEHAVIORS:

A NEW ERA IN MATERIALS SCIENCE RESEARCH!

Colossal magnetoresistance

Data centers

Currently 2% of total US electricity consumption

Superconductivity

Japan maglev train

375 miles/hr April 2015

The Science Goal

UNCOVER *LOWER* ENERGY EXCITATIONS

To investigate COLLECTIVE ELECTRON BEHAVIORS

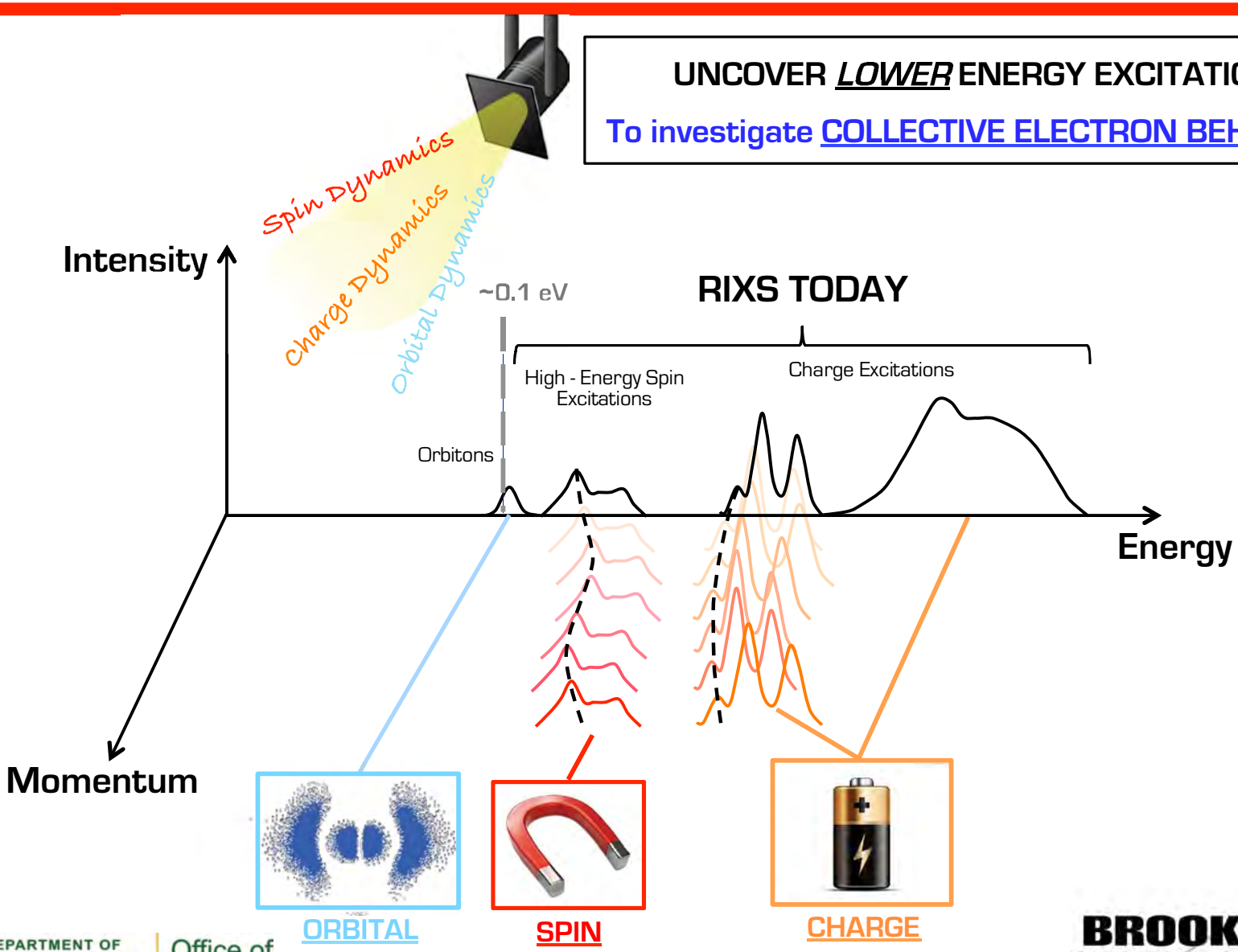

The Science Goal

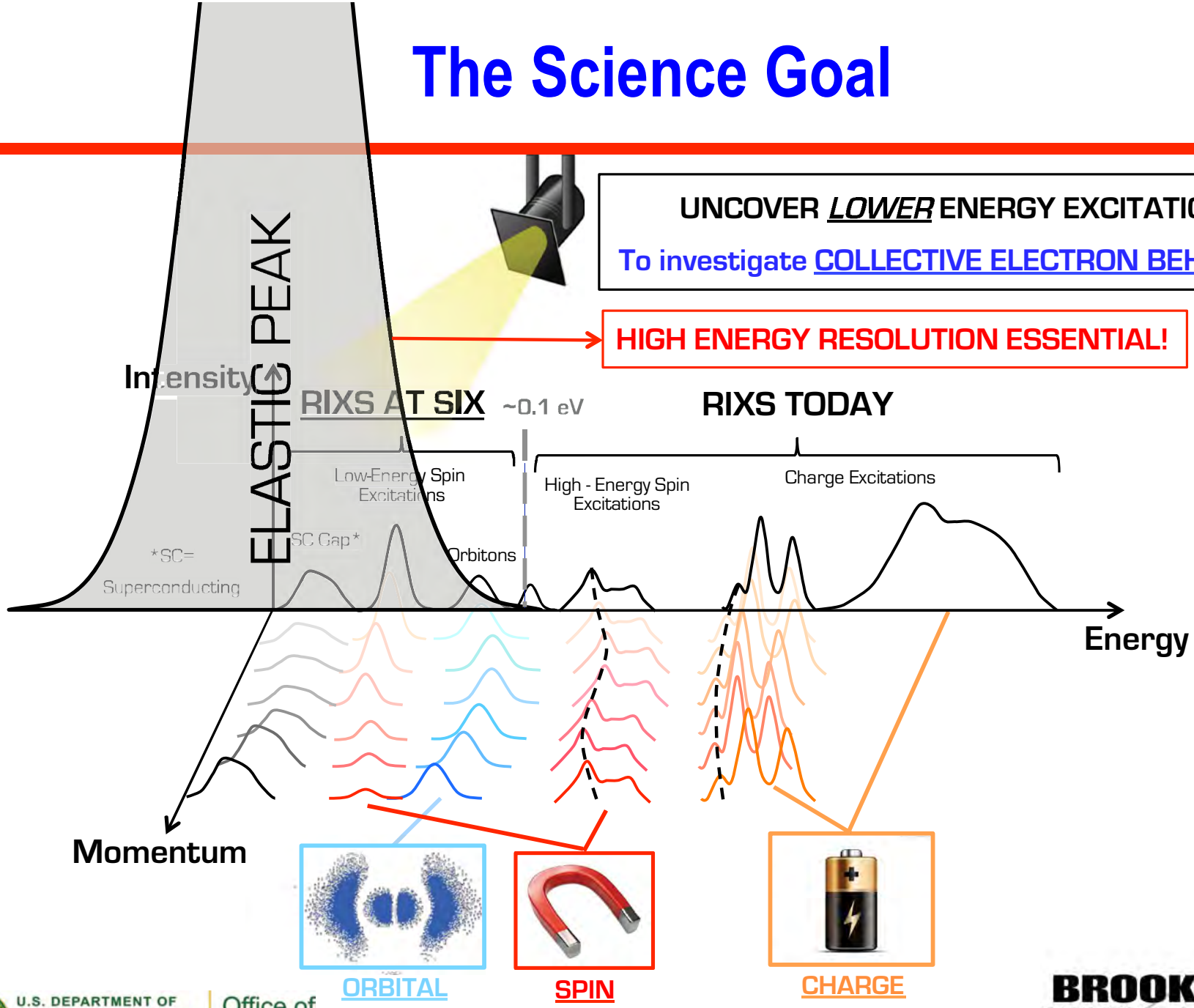

UNCOVER *LOWER* ENERGY EXCITATIONS

To investigate COLLECTIVE ELECTRON BEHAVIORS

HIGH ENERGY RESOLUTION ESSENTIAL!

The Technical Goals

- The Key Performance Parameter: Synchrotron flux at sample

Threshold
KPP

Required for Project Completion

1.5×10^{10} photons/s

Objective
KPP

Reflects the Design Goals

1.5×10^{11} photons/s

The Technical Goals

- The Photon Delivery System (PDS) Design Parameters:

Flux similar to ADRESS (SLS), 40% higher resolution

Endstation	Energy Range (eV)	Spot Size (μm^2)	Flux (photons/s) *Three Resolution Modes:*		
			Ultrahigh resolution	*High resolution*	*Medium resolution*
Inelastic Soft X-ray Scattering	165 to 2300	0.7 (V) x 6 (H) FWHM	1.5×10^{11} @ 100,000 RP* 10 meV @ 1 keV	1×10^{12} @ 35,000 RP* 30 meV @ 1 keV	8×10^{12} @ 14,000 RP* 70 meV @ 1 keV

*RP=Resolving Power

Resolution 10x higher and 1/75 of flux compared with ADRESS, but SIX endstation throughput 23x higher

The Technical Goals

- The Endstation Design Parameters:
  - Matched resolving power to PDS
  - Maximized throughput
  - Momentum transfer tunability without breaking vacuum

The Concept

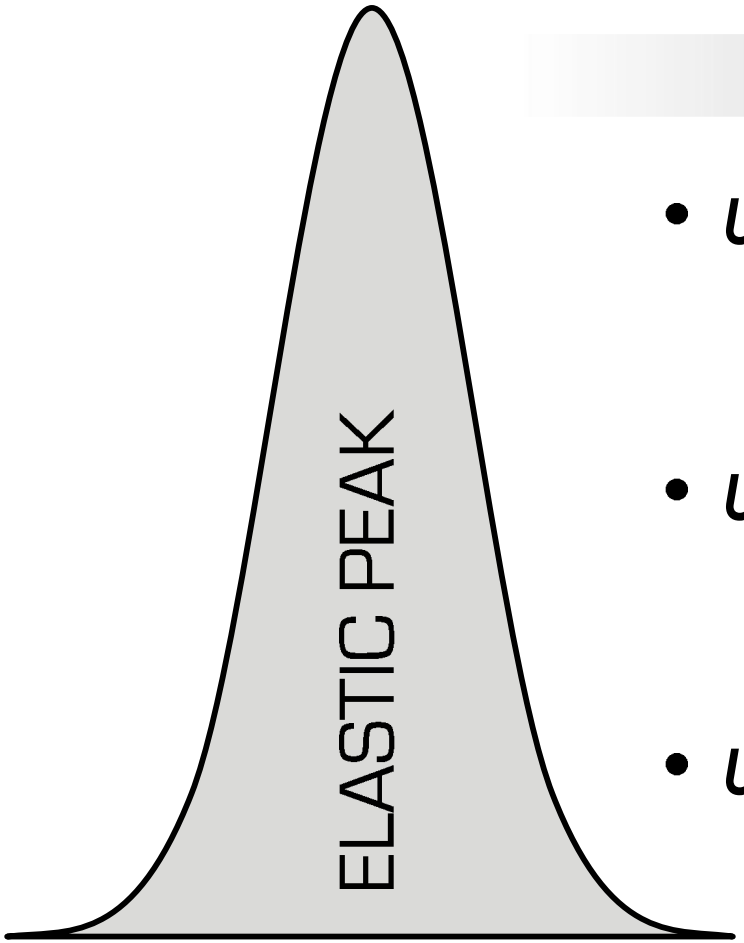

- ***Ultra-long***
  - Beamline: 105 m
  - Spectrometer: 15 m
- ***Ultra-flat***
  - 50 nrad slope error on flat optics
  - 100 nrad slope error on cylinder
- ***Ultra-stable***
  - 50 nrad pitch stability on gratings
  - Low vibrations
  - High thermal stability

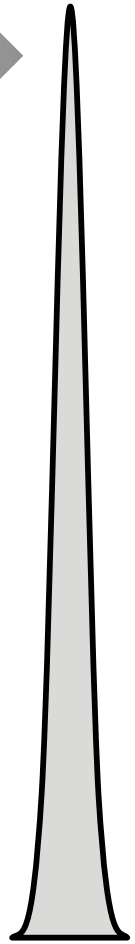

The Concept

- PDS and Endstation schematic with most critical specifications:

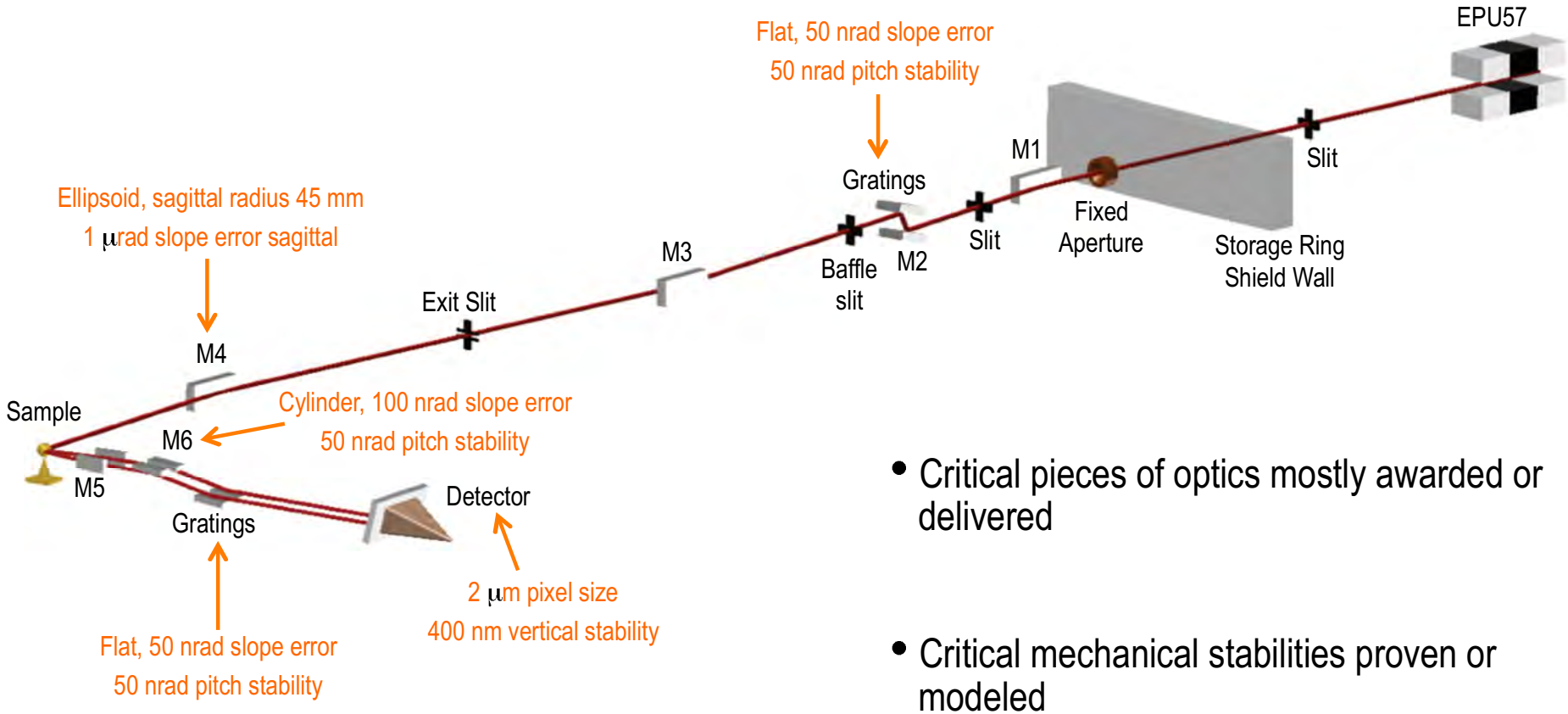

- Critical pieces of optics mostly awarded or delivered
- Critical mechanical stabilities proven or modeled

The Concept

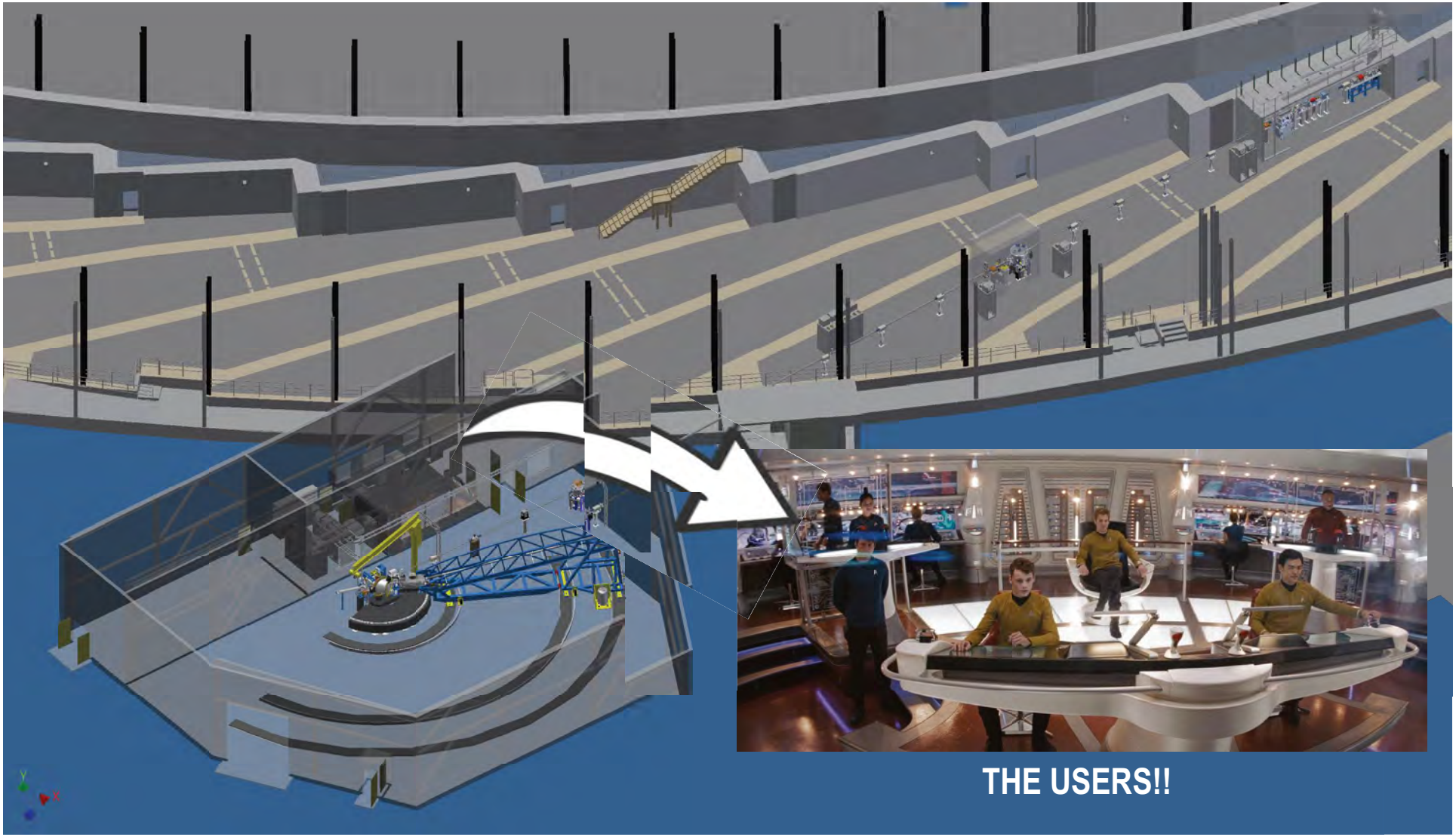

The Concept

- Regular operations at SIX:
  - One RIXS spectrum every 2~4 hours; rotating arm in between two spectra
  - One beamtime between 4 and 6 days
- Allowed user activities without staff presence:
  - Change beamline or spectrometer energy
  - Change momentum transfer
  - Change, align sample
  - Operate cryostat

Scope and Procurement Strategy

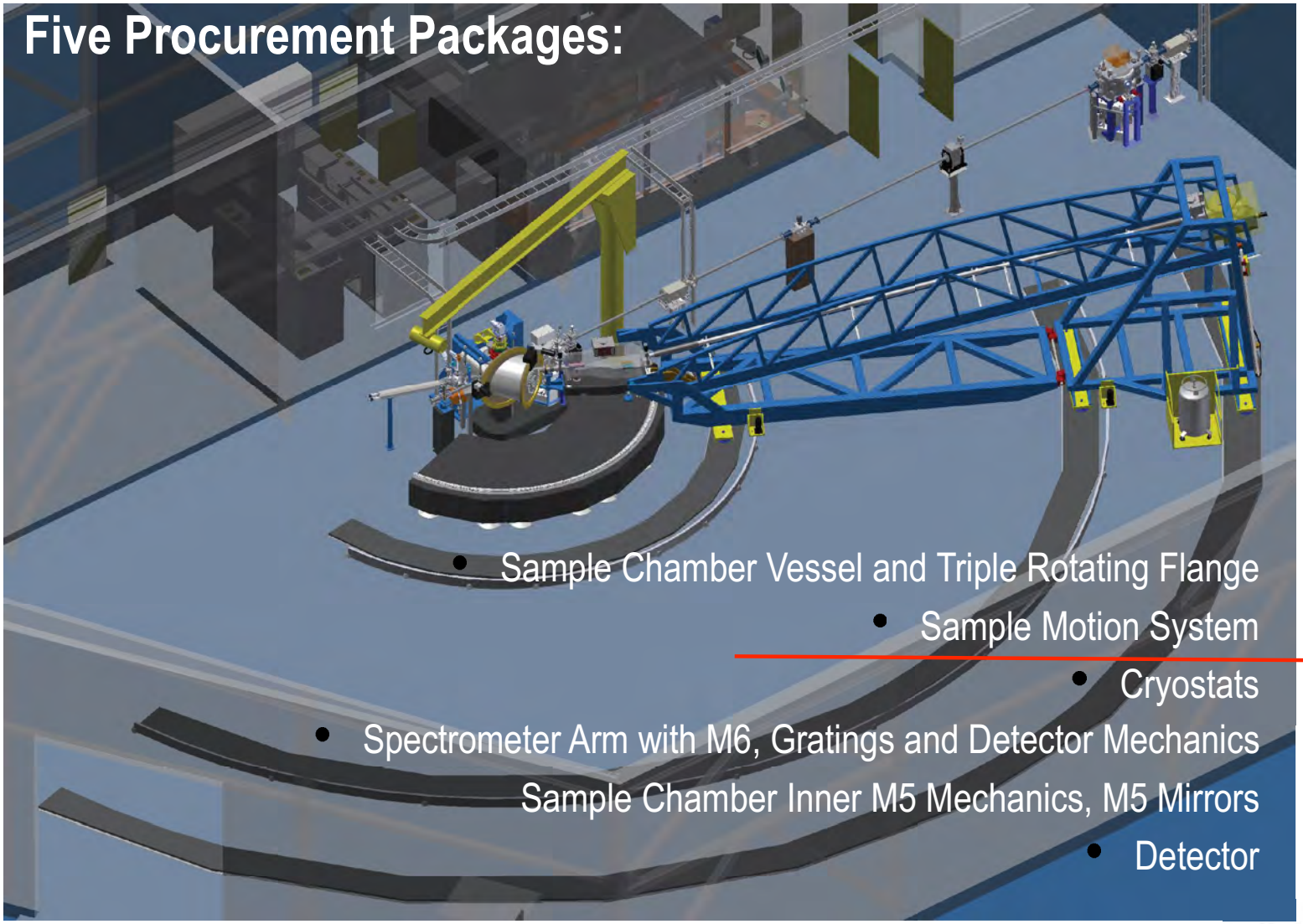

Not Awarded

Awarded

Schedule at a Glance

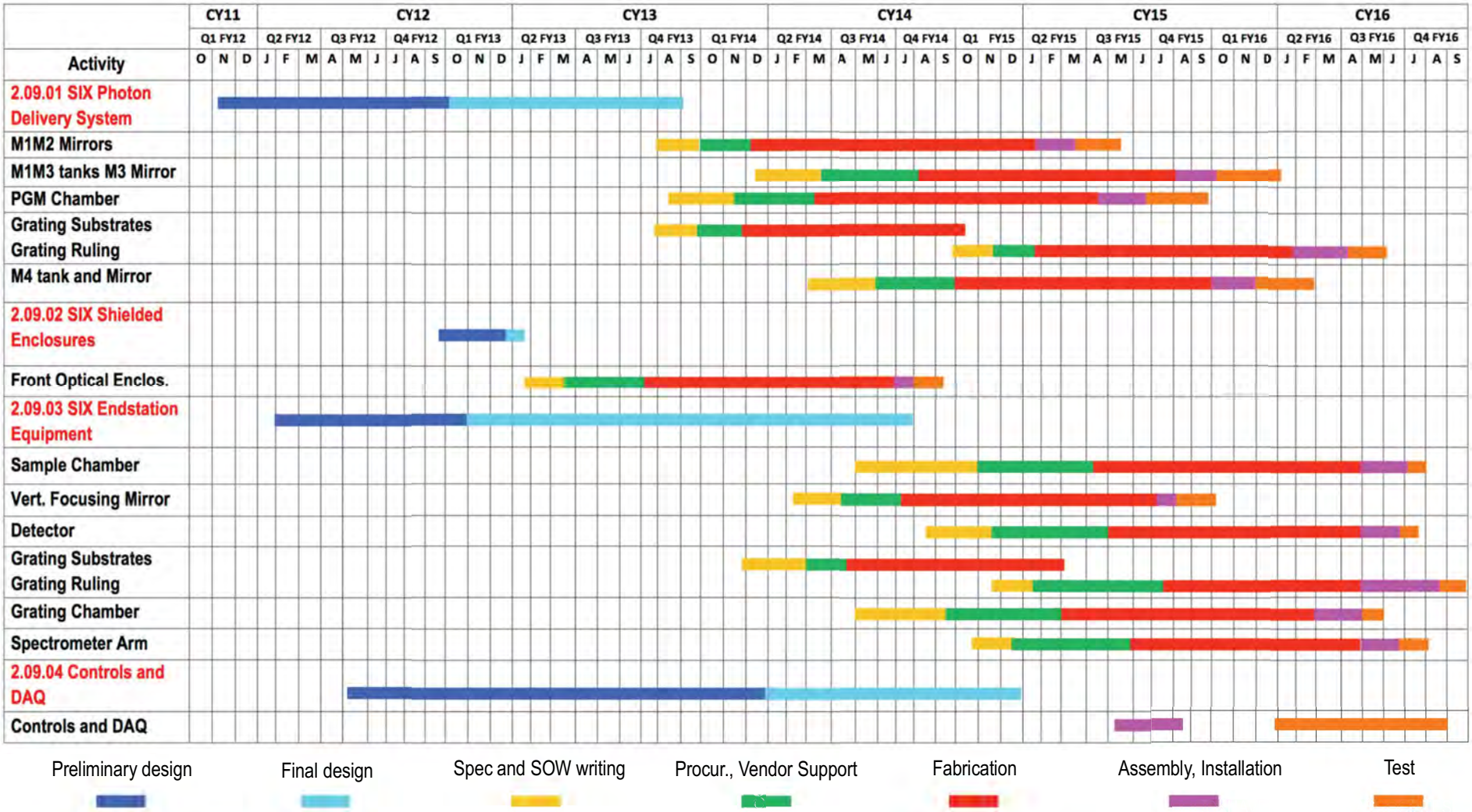

Schedule at a Glance

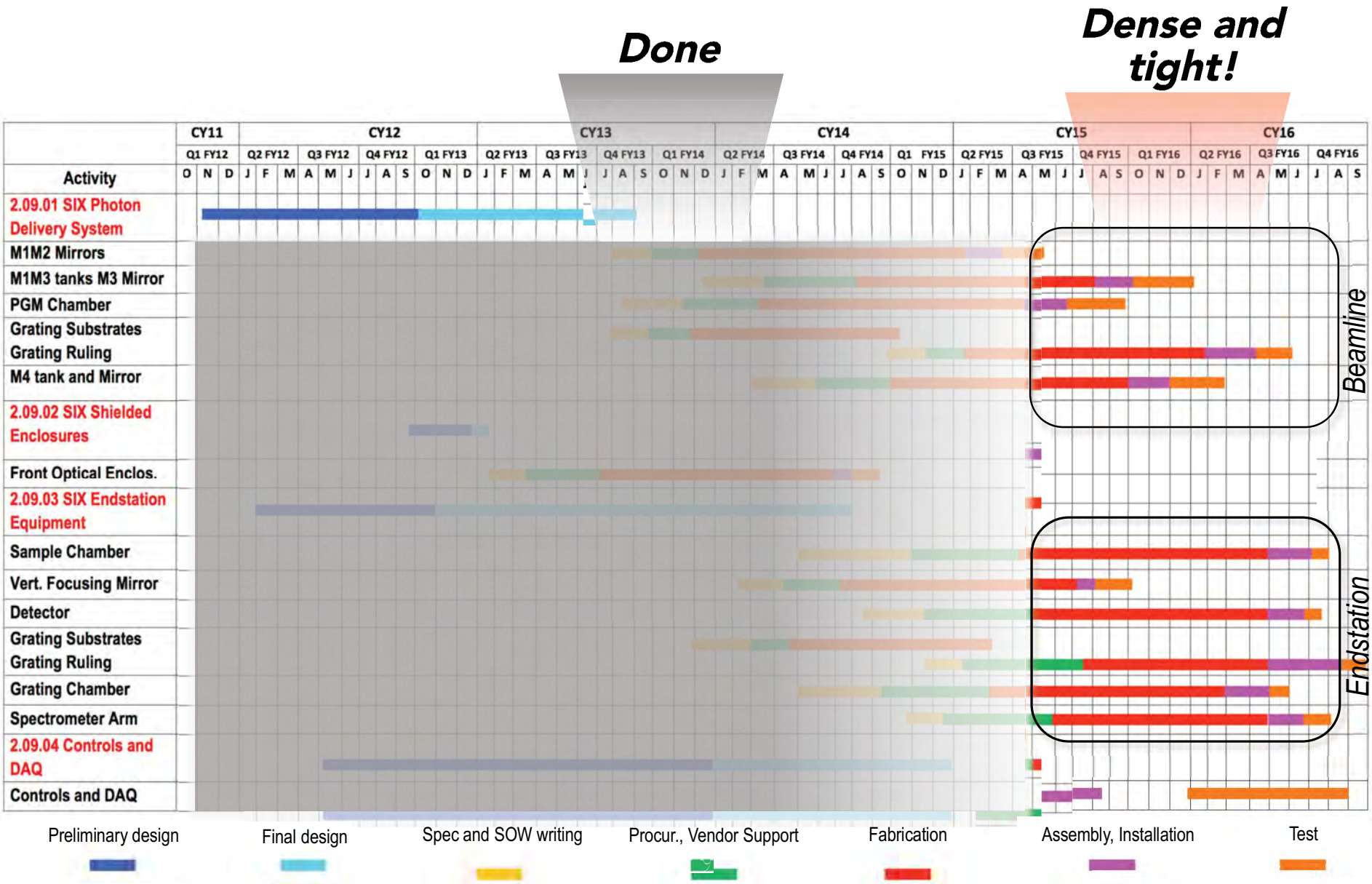

Contract Status

Major Items	Company	Award	PDR	FDR	FAT	Receipt
Photon Delivery System						
M1&M3 mirror systems	Bestec	07/31/2014	10/01/2014	11/29/2014	**07/30/2015**	**08/30/2015**
PGM	Bestec	03/21/2014	05/19/2014	06/18/2014	02/16/2015	**05/08/2015**
M4 mirror system	Bestec	10/22/2014	12/17/2014	01/23/2015	**09/11/2015**	**10/23/2015**
M1&M2 mirrors	InSync	12/05/2013	-	-	-	**04/30/2015**
Grating substrates	Zygo	11/20/2013	-	-	-	12/15/2014
Grating ruling	Inprentus	12/05/2014	-	-	-	**12/01/2015**
Endstation						
Spectrometer Arm	Bestec	02/04/2015	**05/11/2015**	**07/09/2015**	**02/23/2016**	**05/12/2016**
M6 mirror	JTEC	07/08/2014	-	-	-	**05/22/2015**
Grating substrates	JTEC	04/29/2014	-	-	-	04/02/2015
Grating ruling	Inprentus	03/26/2015	-	-	-	**04/02/2016**
Detector	XCAM	02/10/2015	04/06/2015	**05/10/2015**	**07/20/2016**	**08/10/2016**

Activities Not Completed Yet / Package Received and Approved

Next Talks

- Optical Design Considerations

- Satellite Building
- Overall Mechanical Design of Sample Chamber and Spectrometer Arm

- Sample Motion System and Cryostat Configurations, CCD Detector Design and Performance

NEXT Project Summary Schedule

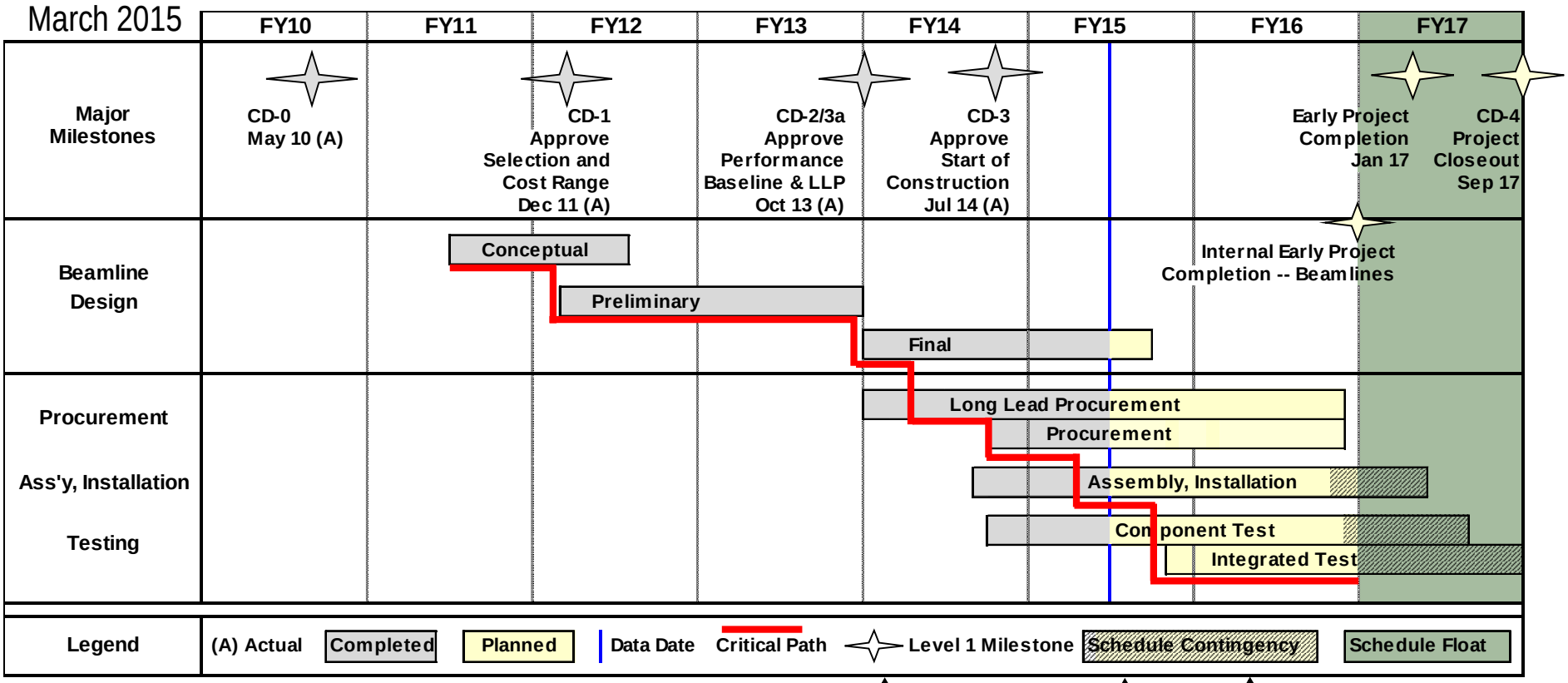

Photon Delivery System Reviews

Endstation Reviews

Early Science Workshop

U.S. DEPARTMENT OF ENERGY | Office of Science

BROOKHAVEN NATIONAL LABORATORY
BROOKHAVEN SCIENCE ASSOCIATES

SIX Satellite Building

W. Leonhardt
SIX Mechanical Engineer
SIX End Station Review 5 May 2015

U.S. DEPARTMENT OF ENERGY

BROOKHAVEN NATIONAL LABORATORY
BROOKHAVEN SCIENCE ASSOCIATES

SIX Beamline Location

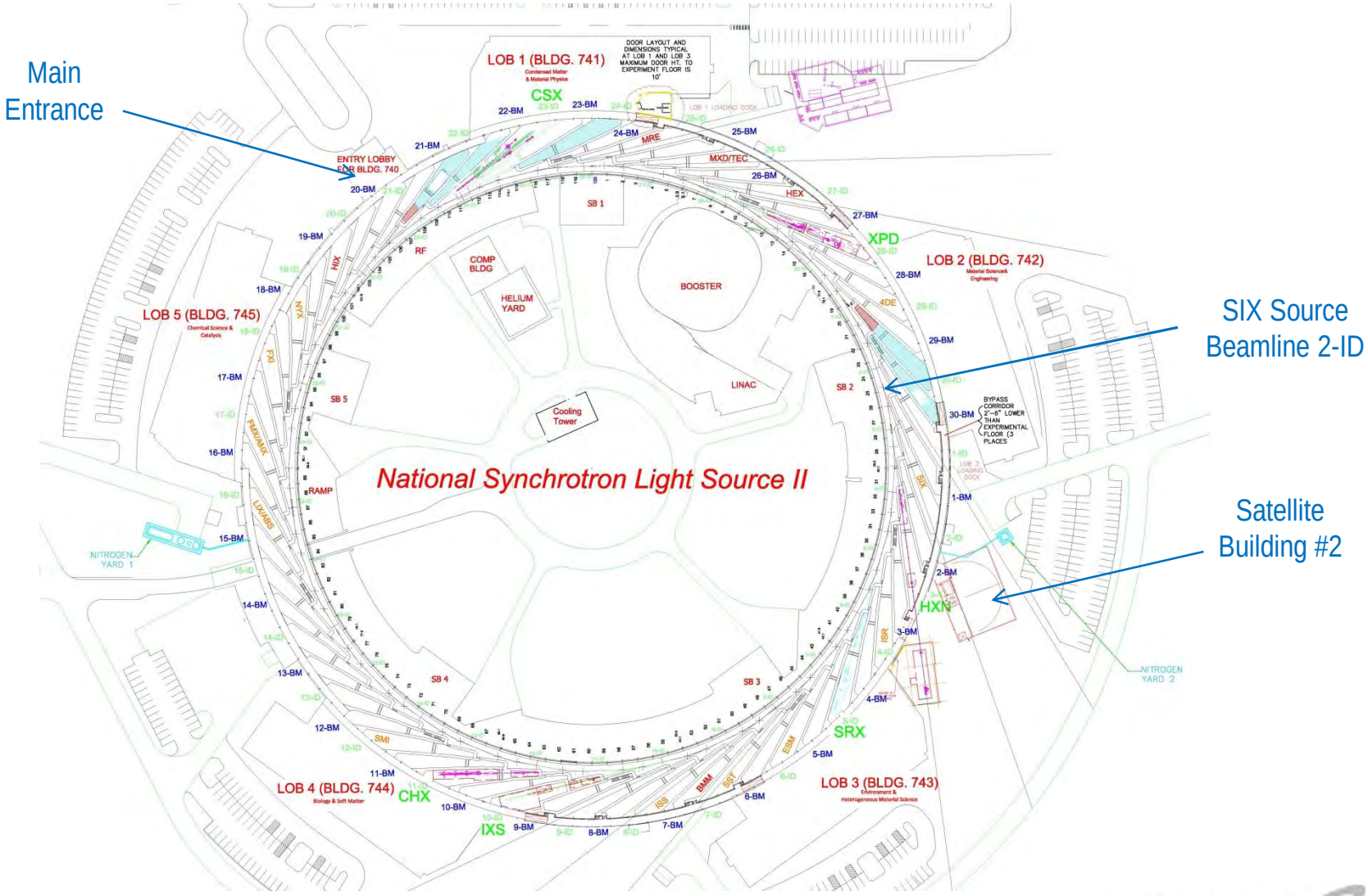

U.S. DEPARTMENT OF ENERGY

BROOKHAVEN NATIONAL LABORATORY
BROOKHAVEN SCIENCE ASSOCIATES

Introduction

With a source to sample distance of ~ 100 m and a 15 m Spectrometer arm, the SIX end station needs to be housed in an external building

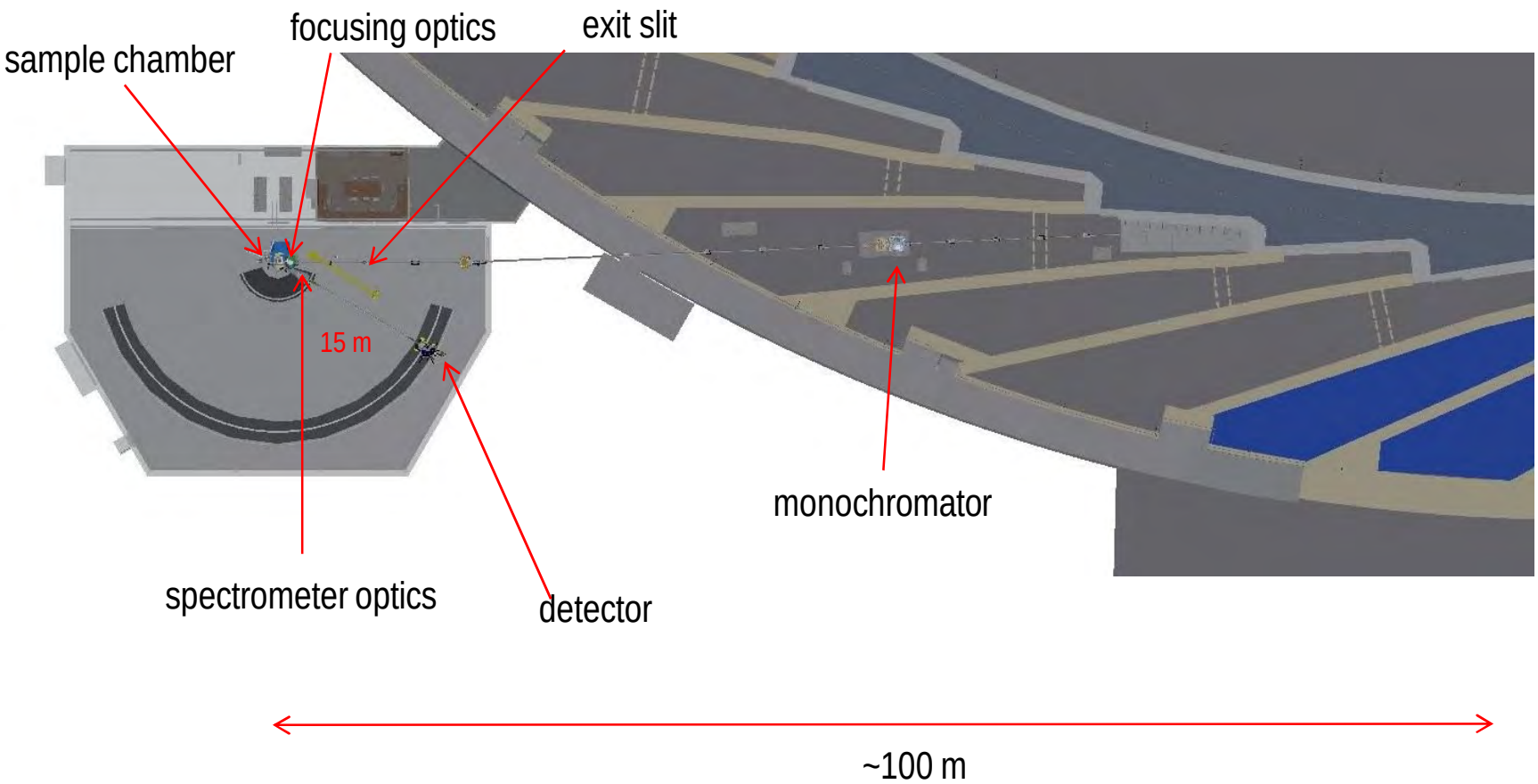

Satellite Building 2

- Civil construction completed July 2014
- Utility installation completed to the level of known requirements
- Temperature control tuning is on-going

Building Features

- Two distinct areas: Experimental Area and adjacent Services Area.
- Experimental floor isolated. 0.7m thick.
- Experimental Area clear internal dimensions = 34m long (parallel to beamline) x 20m wide x 4.5m high.
- Acoustic noise minimized.
- No external access to Experimental Area. Removable wall panel for initial equipment installation.
- Landing area to connect Services Area to ring building with steps and equipment and ADA lifts.
- Services Area to house Control & Electronics Rooms.
- HVAC equipment tied to engineered vibration isolation.
- Extreme attention paid to Vibration & Thermal performance of Experimental Area.

Building Design

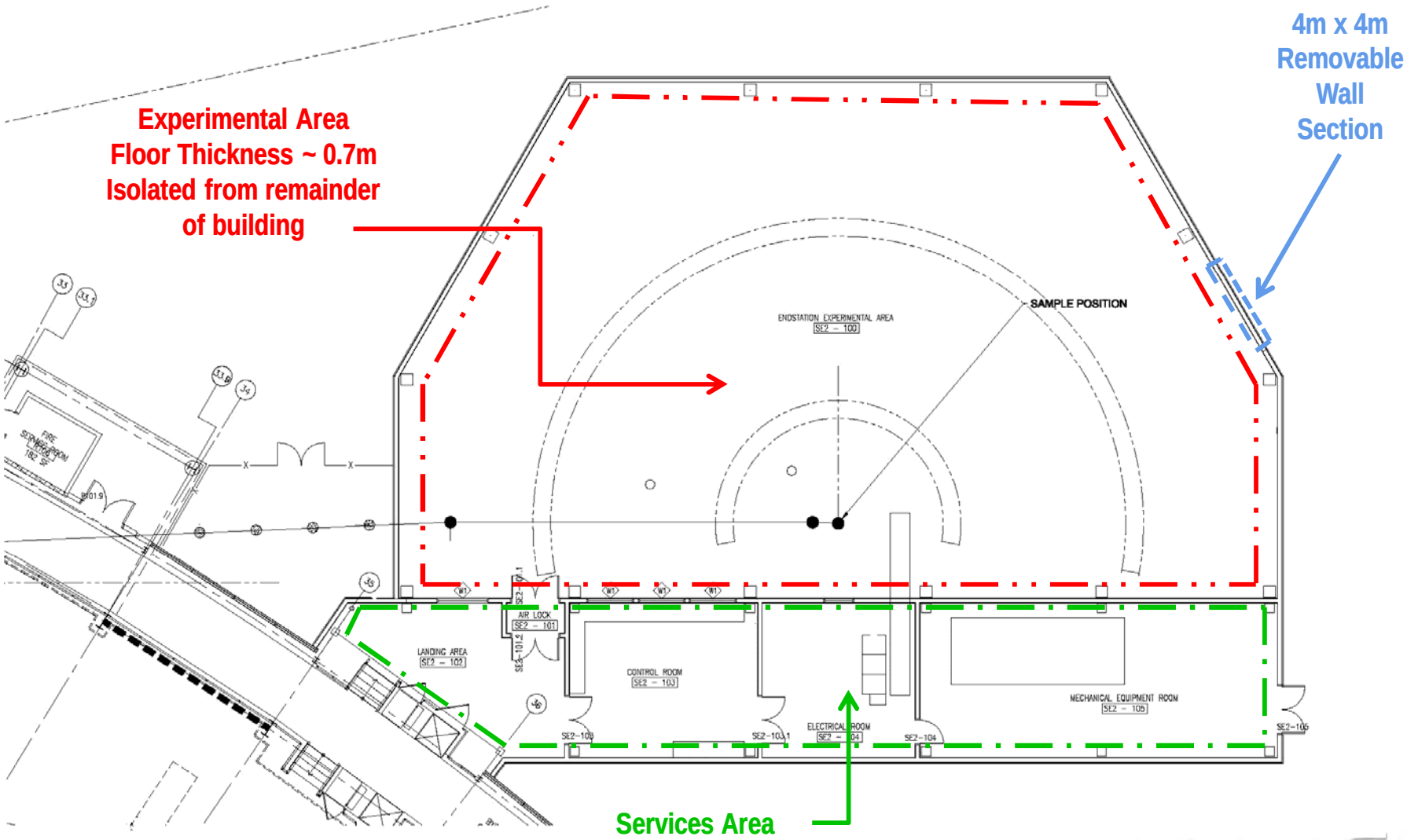

Vibration Criteria & Performance for Experimental Area

- Match performance of ring building experimental floor (VC-E)
- Analysis shows that this is achieved by a floor thickness of 15” or greater
- Additionally, must isolate Experimental Area Floor from Ring Building and adjacent Services Area

Requirement for optics: Displacement ≤ 400 nm

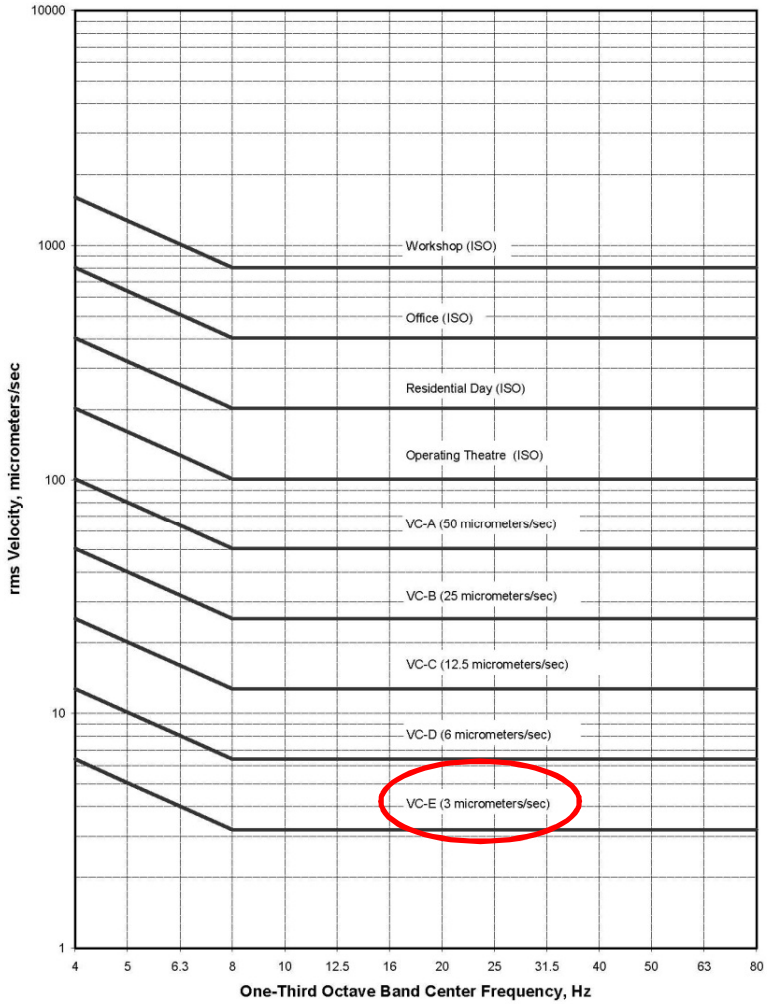

SEB2 RMS Floor Displacement vs Time

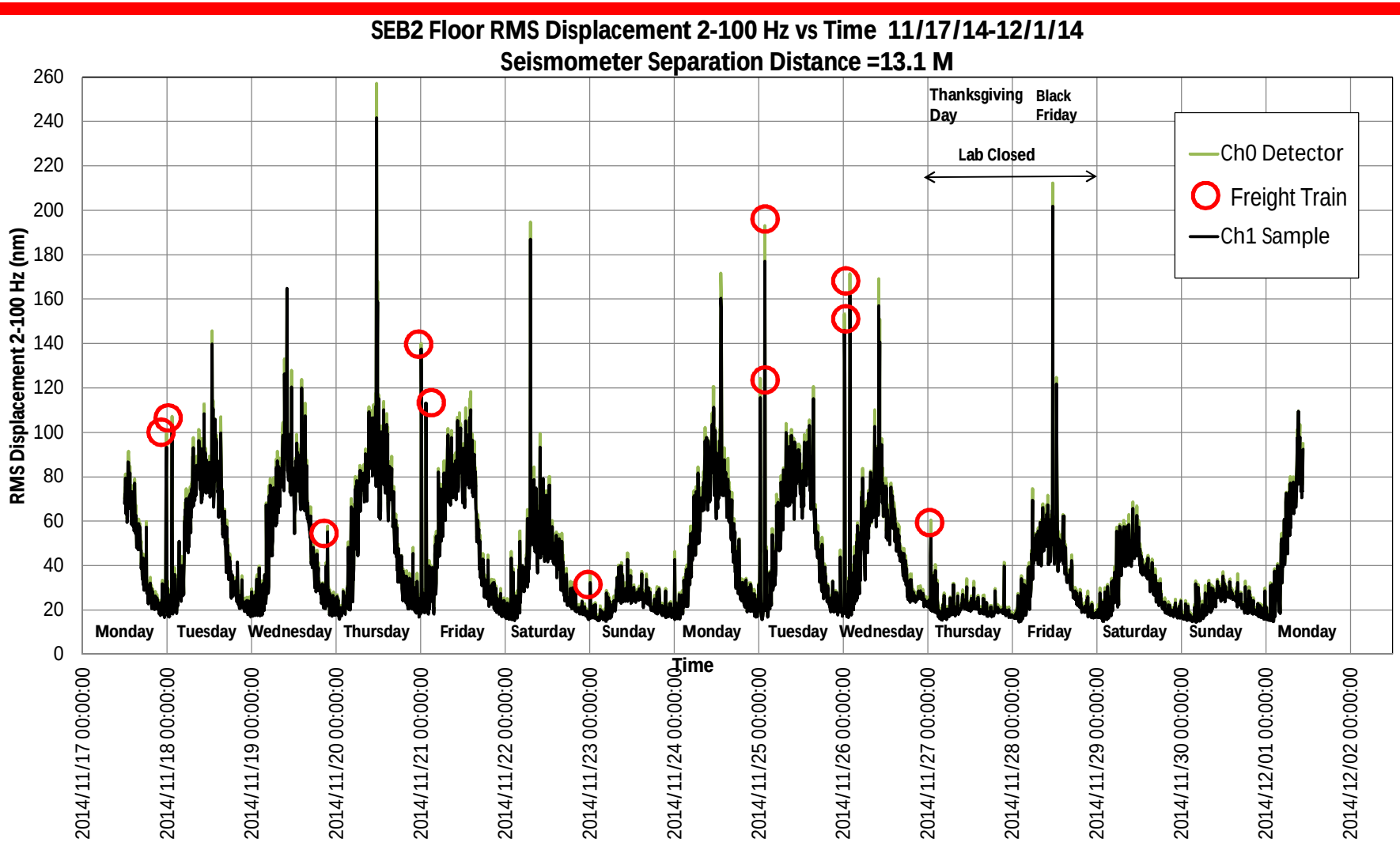

Large Daytime vibrations are either local disturbances or possibly passenger trains.

Large Night Time vibrations are freight trains

U.S. DEPARTMENT OF ENERGY
BROOKHAVEN NATIONAL LABORATORY
BROOKHAVEN SCIENCE ASSOCIATES

Thermal Stability Criteria

Target: drift of 1-2 meV/hr

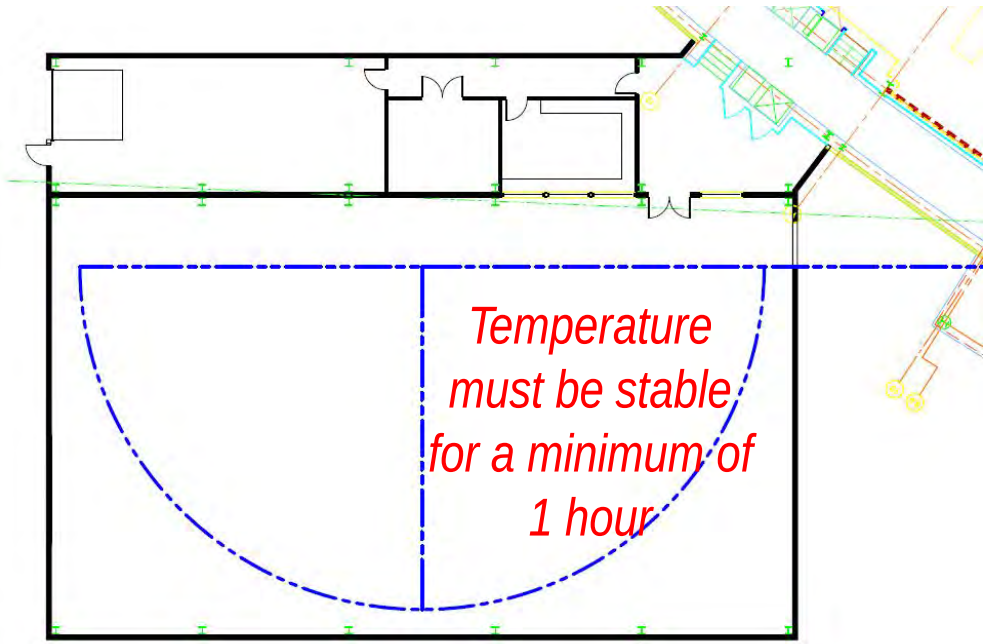

Standard "office environment" for Services Area

- **Satellite building**:

  0.03°C/h needed

- **Satellite building promised performance**:

  0.5°C

  - **Will provide local thermal enclosure around spectrometer arm if required.**

Temperature data

Data taken by A. Broadbent

- Days 1-4: 0.2 C, variations are following a night/day 12-hr pattern
- Days 5-10: 0.04 C (below or on par with sensor resolution) except for 3 small bumps of ~0.1 C
- Days 11-12: Back in the 0.2 C variation range with a pattern resembling days 1-4

Fine tuning of the HVAC system controls is on-going

Data taken by C. Channing

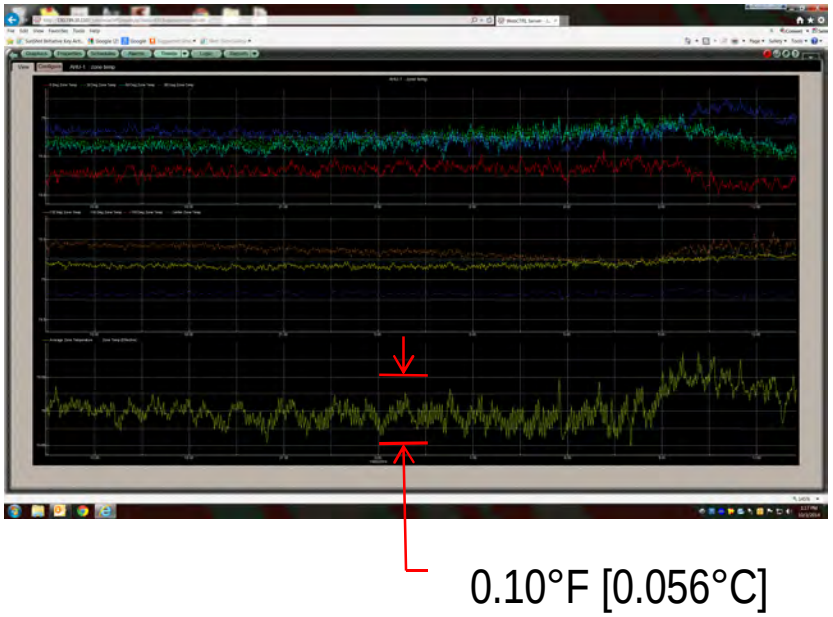

Control & Electronics Room Layouts

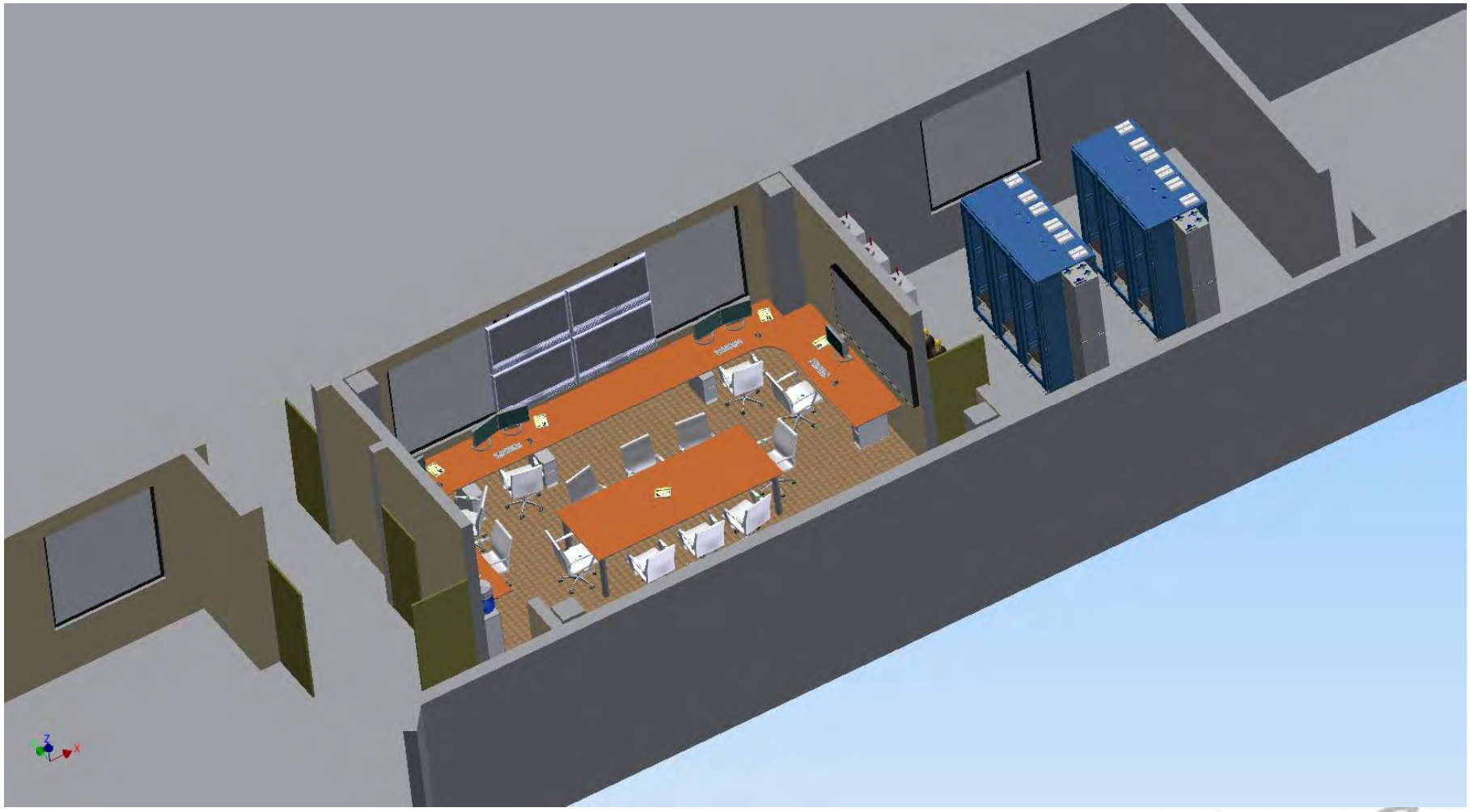

SIX End Station Mechanical Design

W. Leonhardt

SIX Mechanical Engineer

SIX End Station Review 5 May 2015

U.S. DEPARTMENT OF ENERGY | Office of Science

BROOKHAVEN NATIONAL LABORATORY
BROOKHAVEN SCIENCE ASSOCIATES

End Station Layout

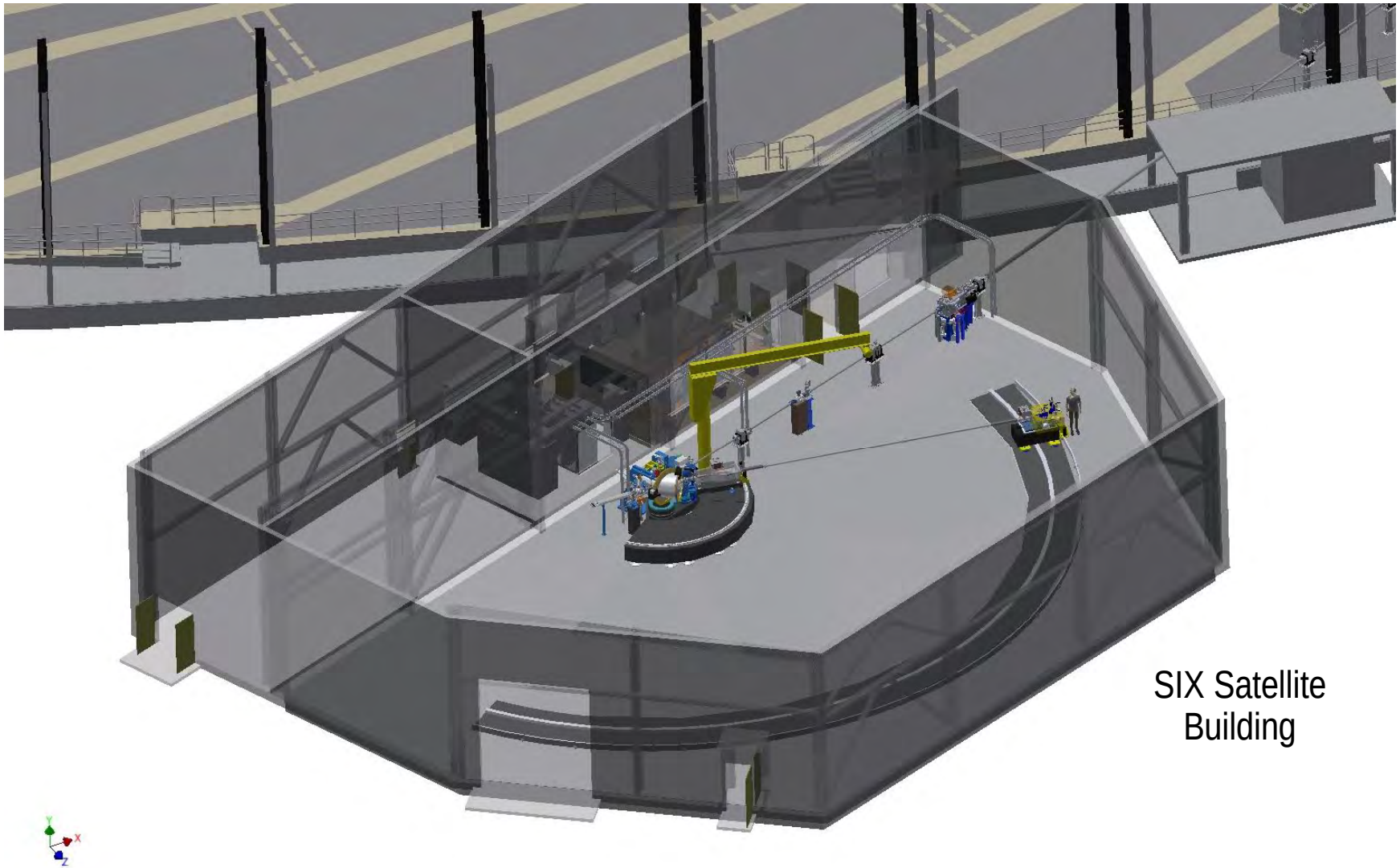

Major End Station Elements

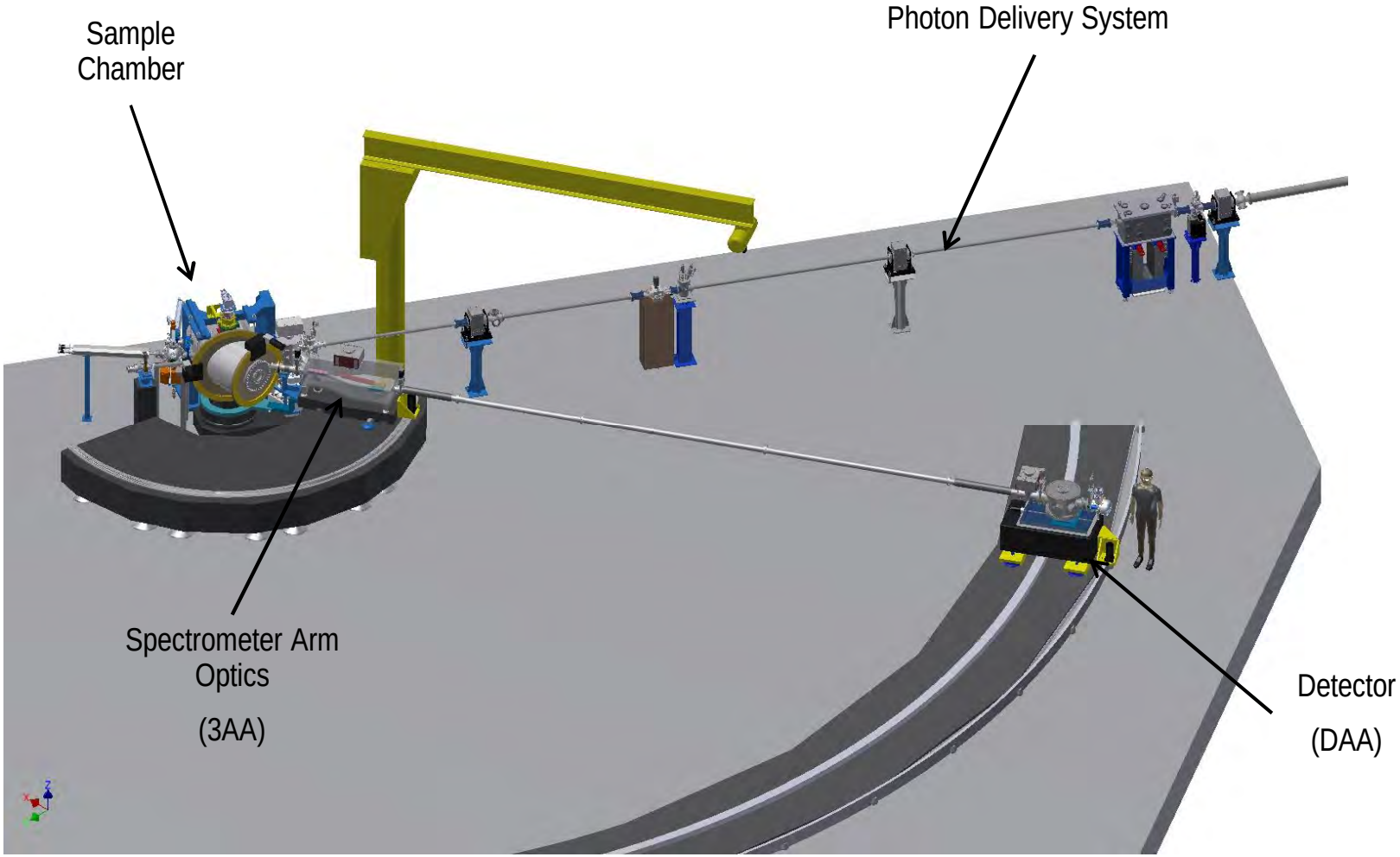

Sample Chamber (BNL Concept)

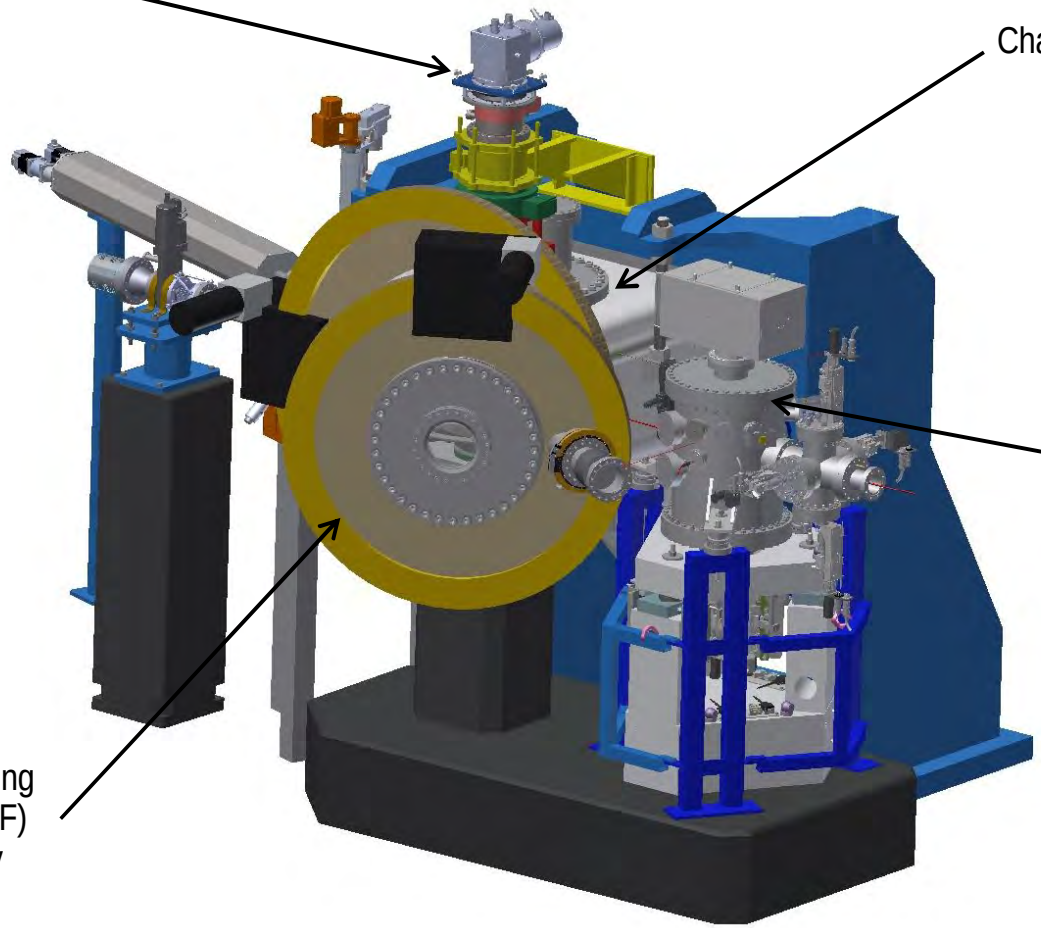

Sample Chamber

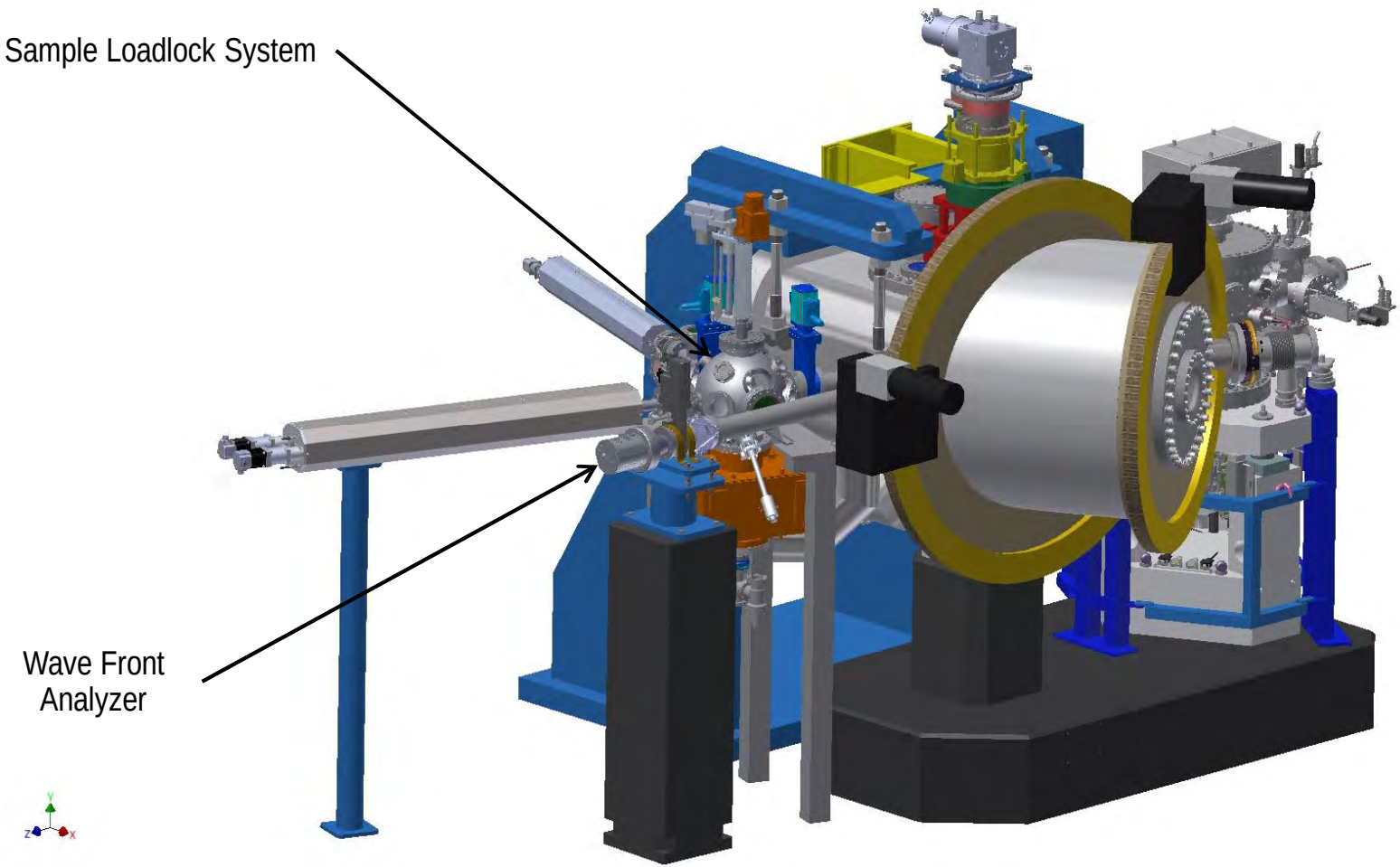

Thermionics Conceptual Design

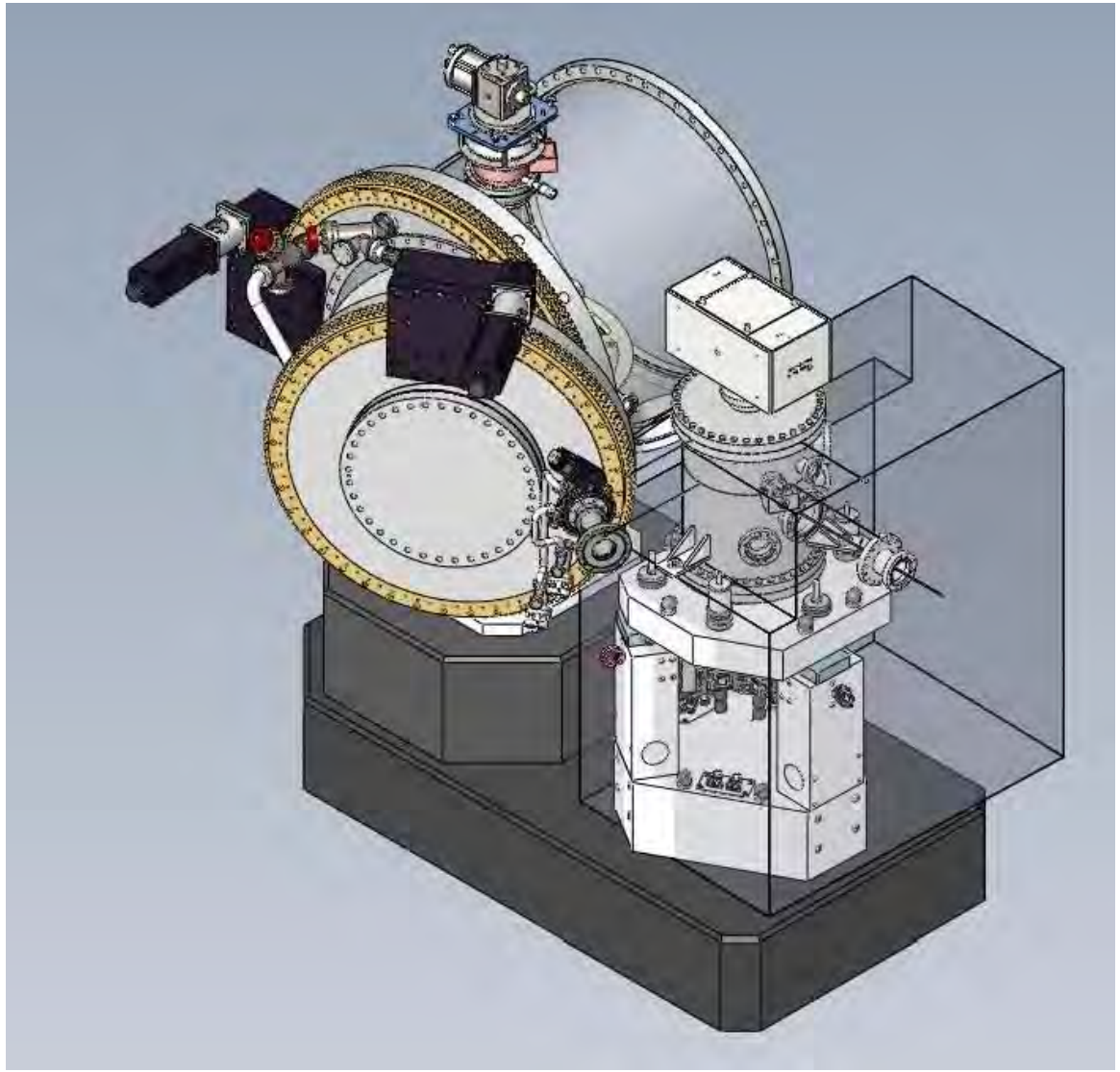

Operation of TRF

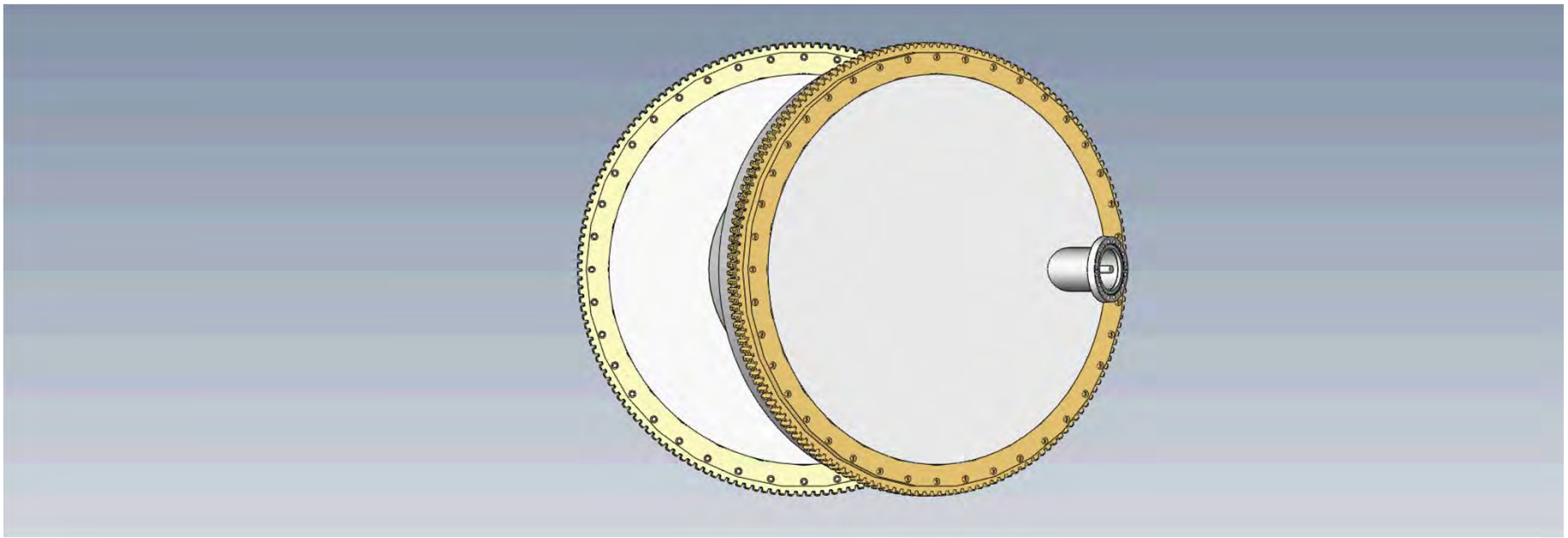

Top View

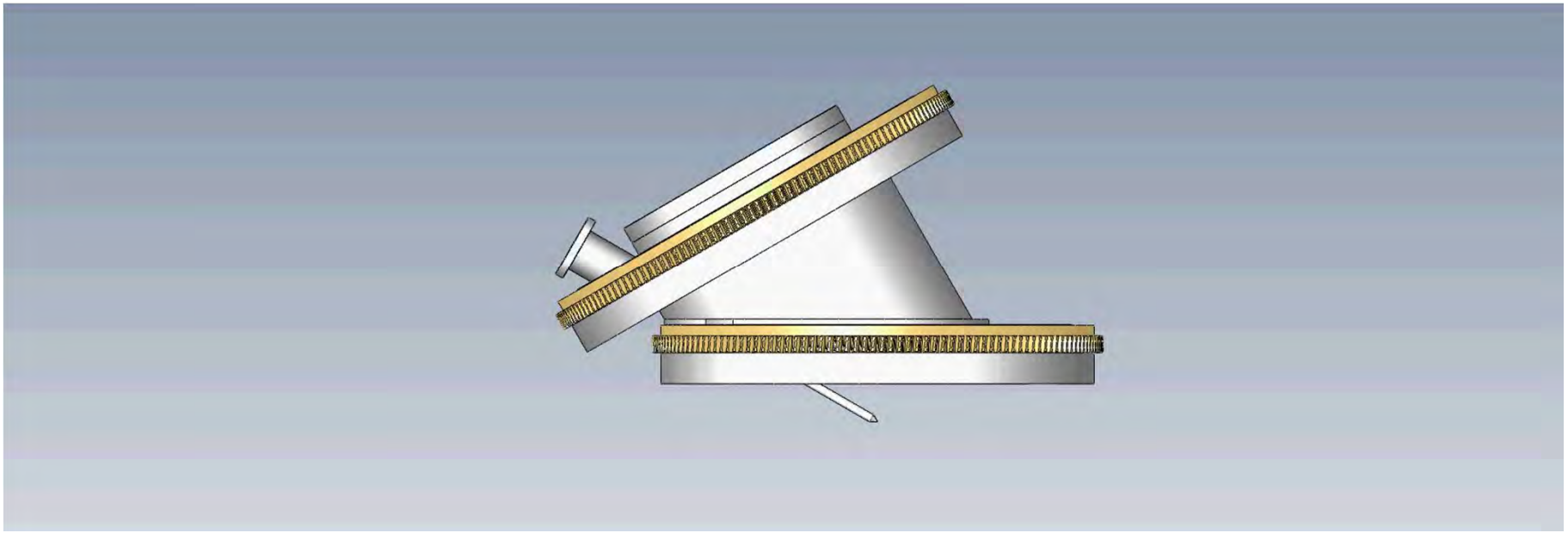

Current Chamber Procurement Status

- Previously issued an RFQ for Chamber, TRF, Stand and Cryostat Motion Control.
- Vendor quote from Thermionics (only bidder) too high.
- Currently refining specs.
- Intend to solicit in near future:
  - Applied Vacuum Technology with Thermionics as sub-contractor for TRF.
  - Bestec with VAb vacuum Anlagenbau GmbH as sub-contractor for TRF.

Look Inside Sample Chamber

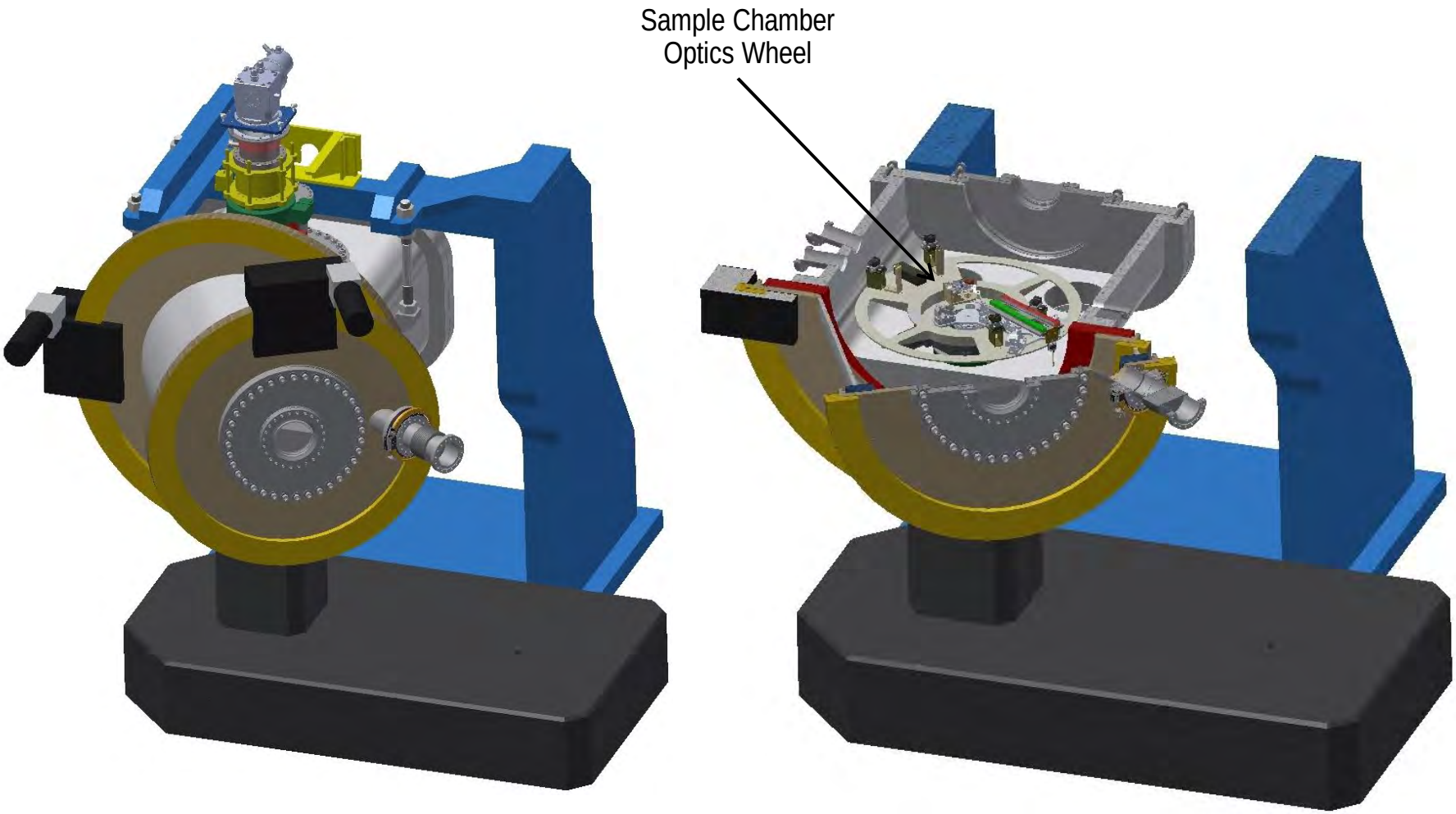

“In Chamber” Elements

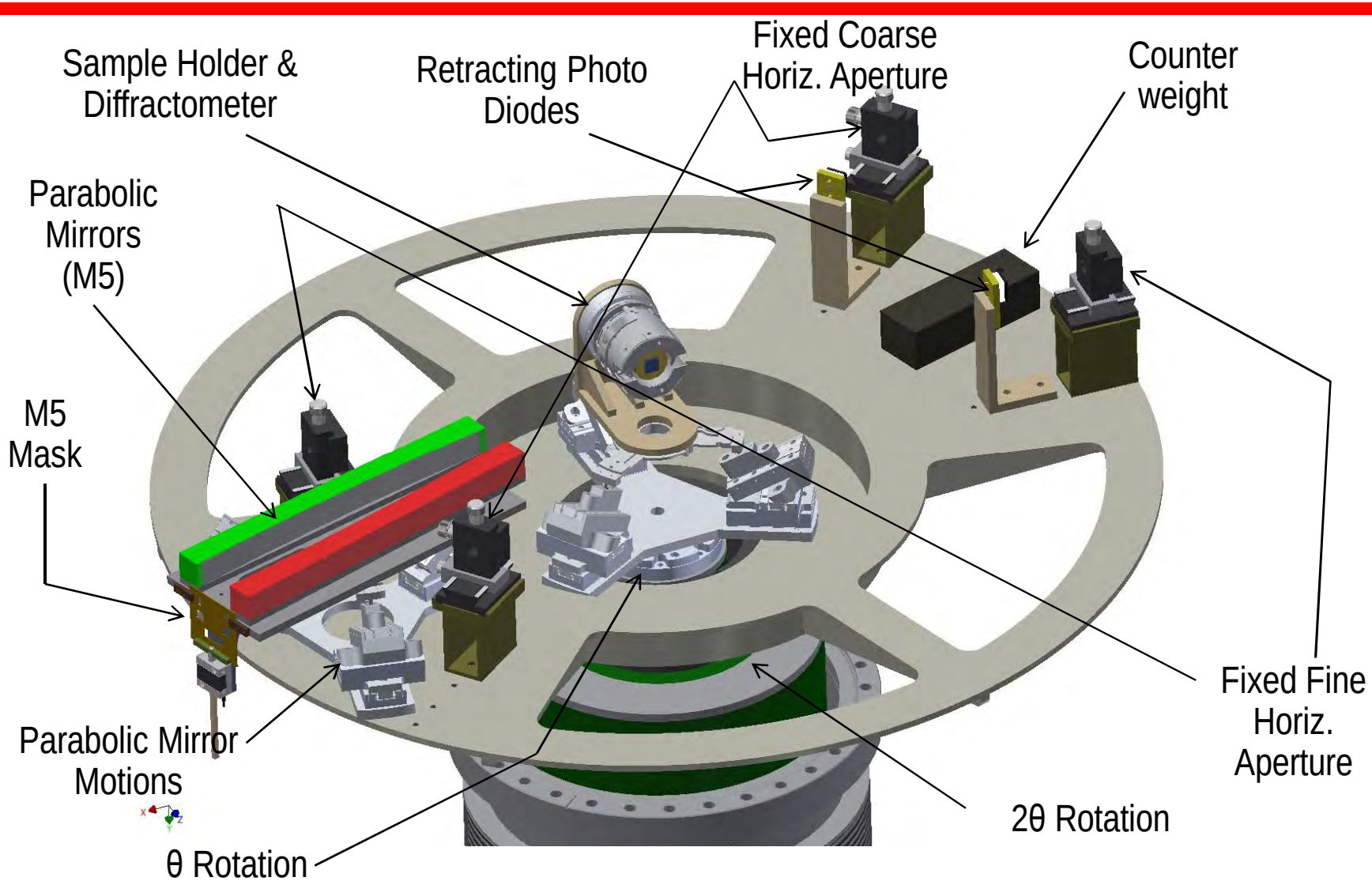

In-chamber elements procured from Bestec

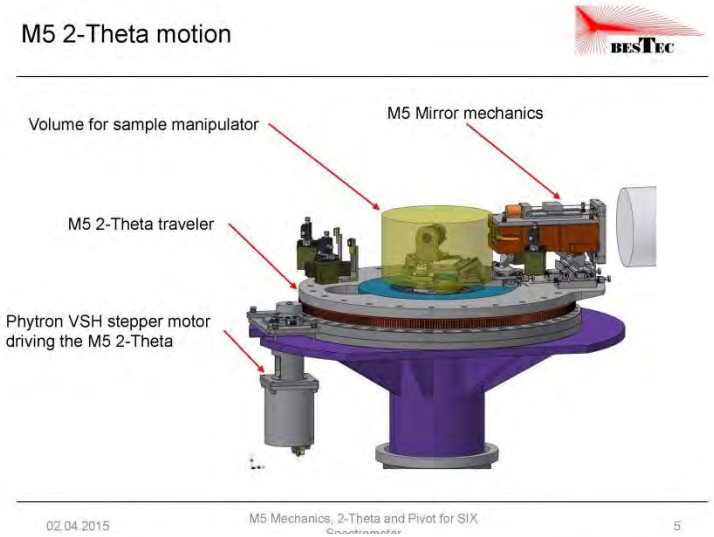

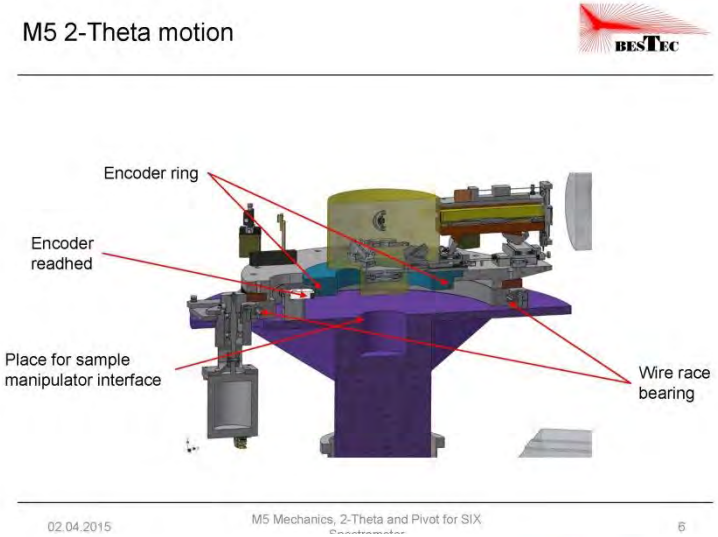

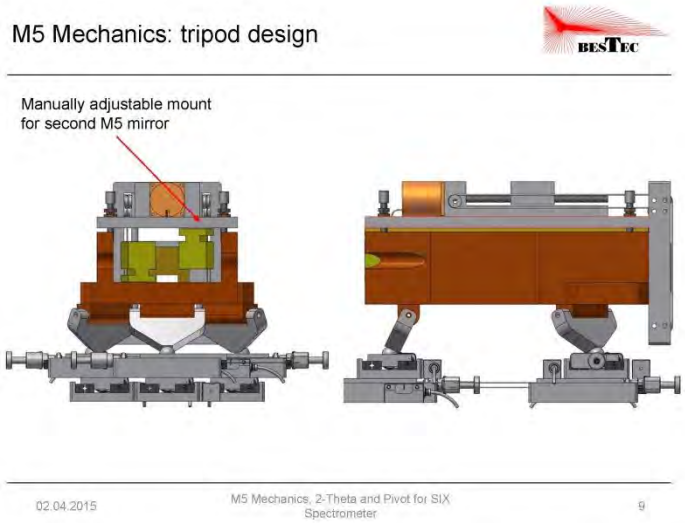

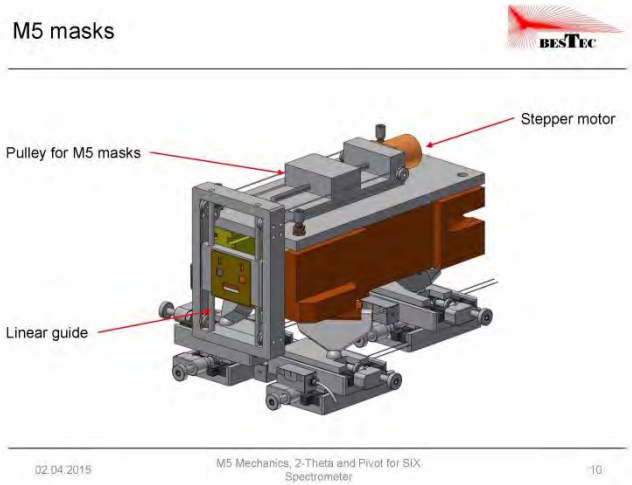

U.S. DEPARTMENT OF ENERGY | Office of Science

Diffractometer

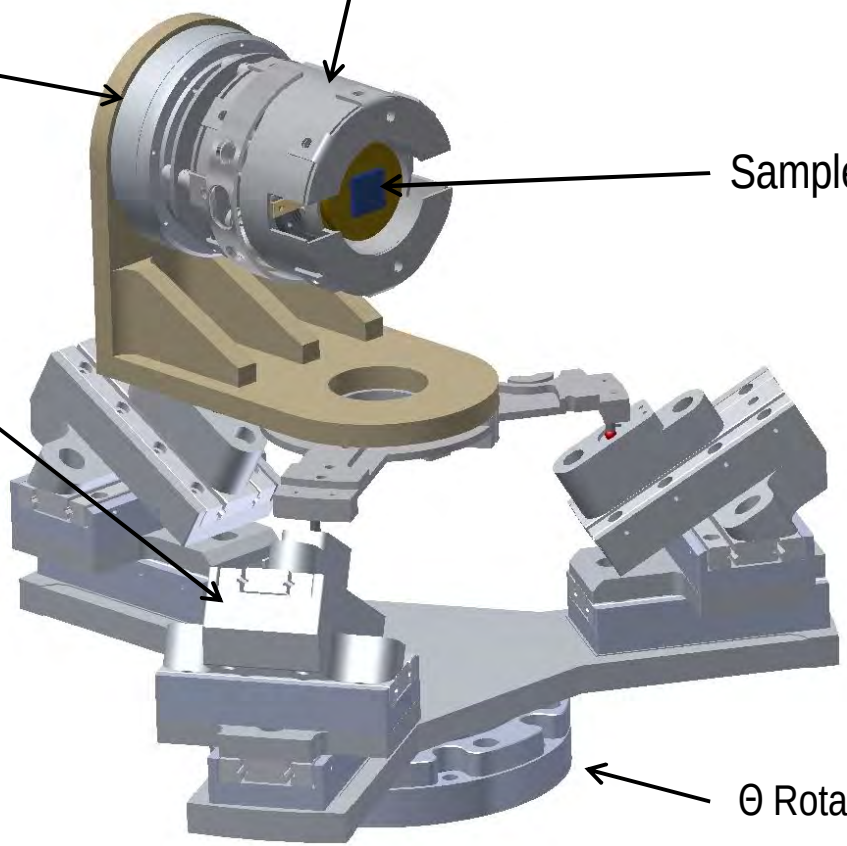

Diffractometer procured from Smaract on an RFQ.

Delivery expected Nov 2015

Two Cryostat Locations

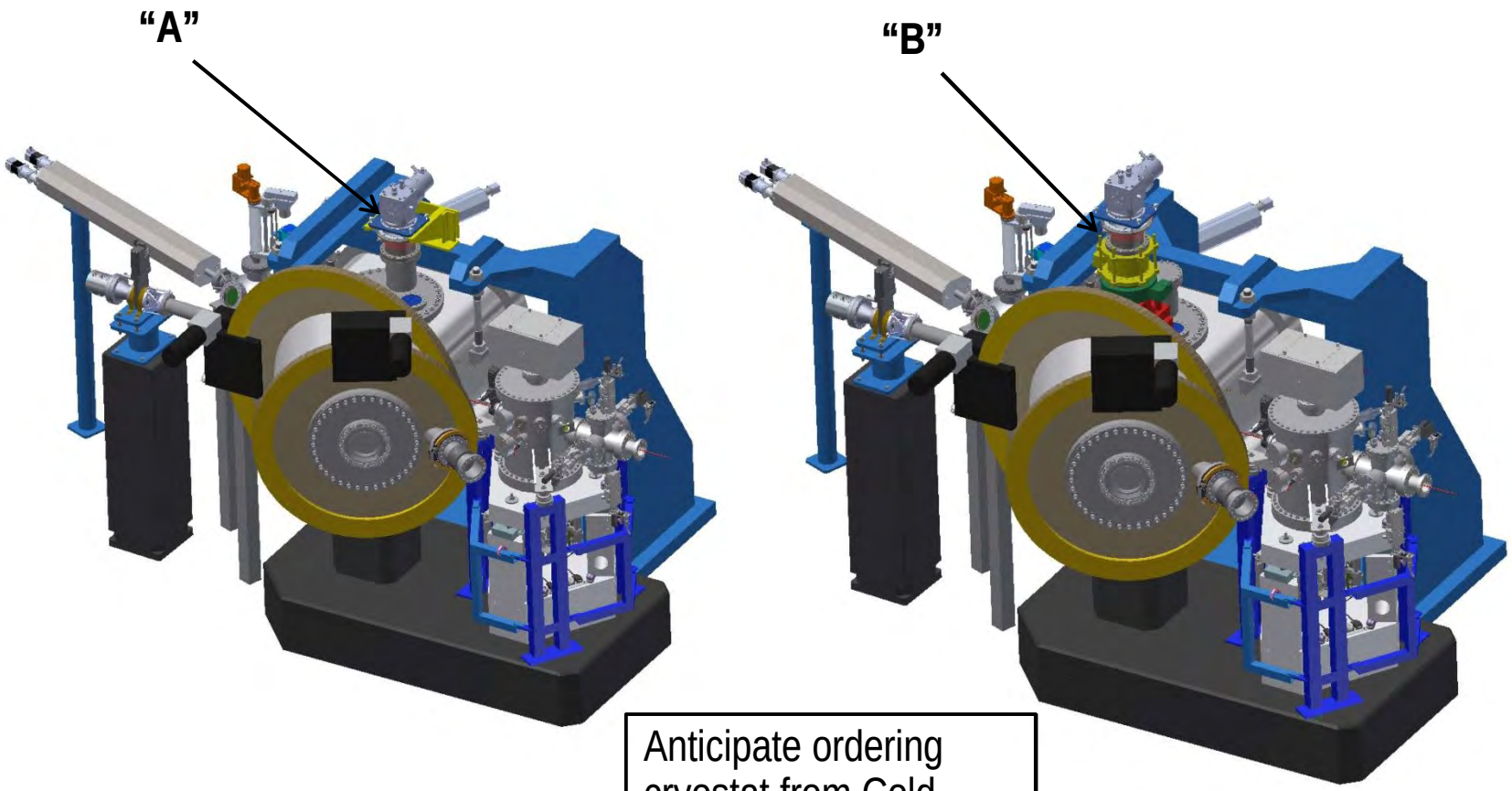

Anticipate ordering cryostat from Cold Edge Technology on an RFQ. 14 week delivery.

Cryostat Locations

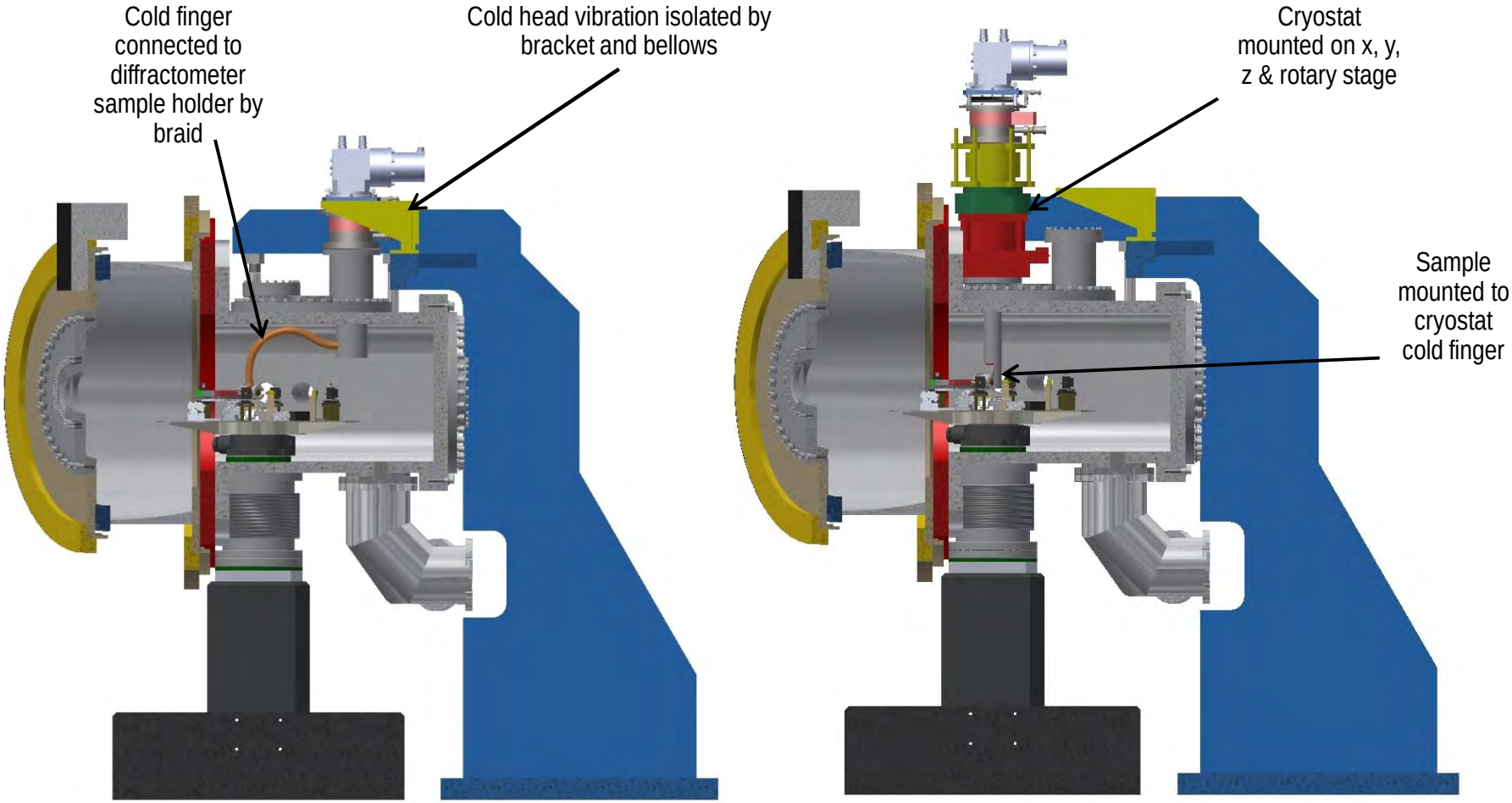

Configuration "A"

Configuration "B"

Spectrometer Arm Optics

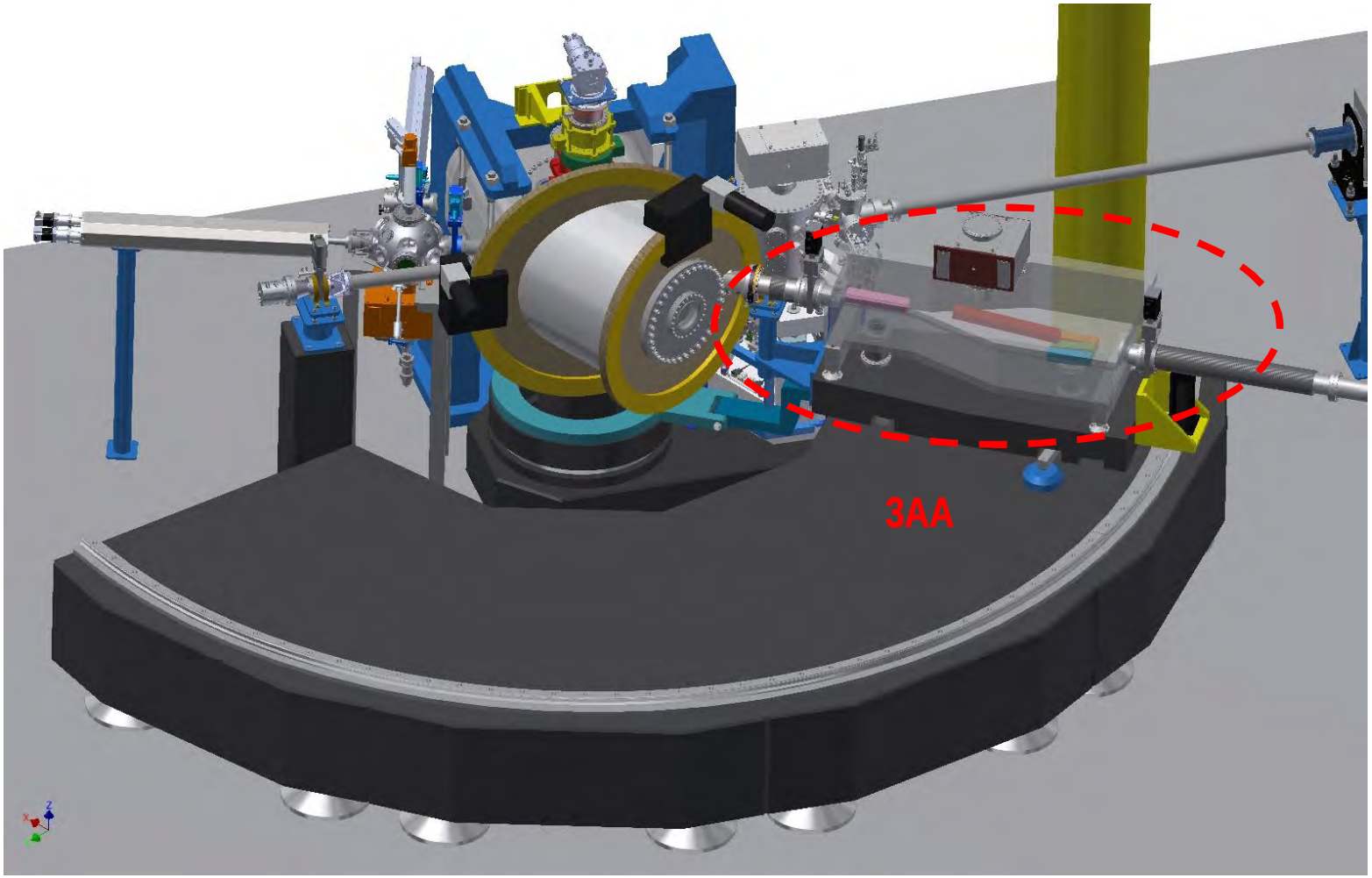

Close-up of Optics

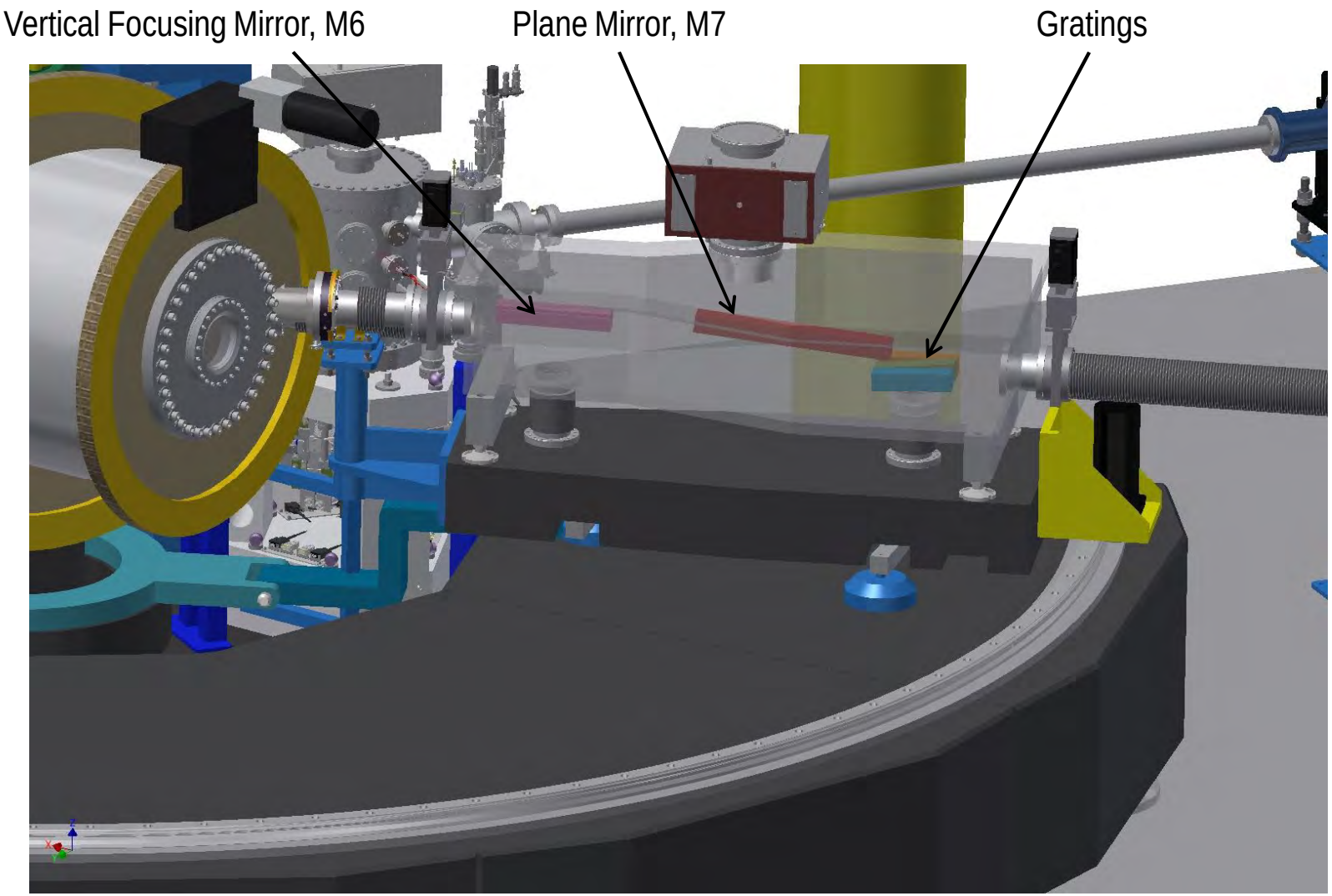

Bestec Conceptual Designs

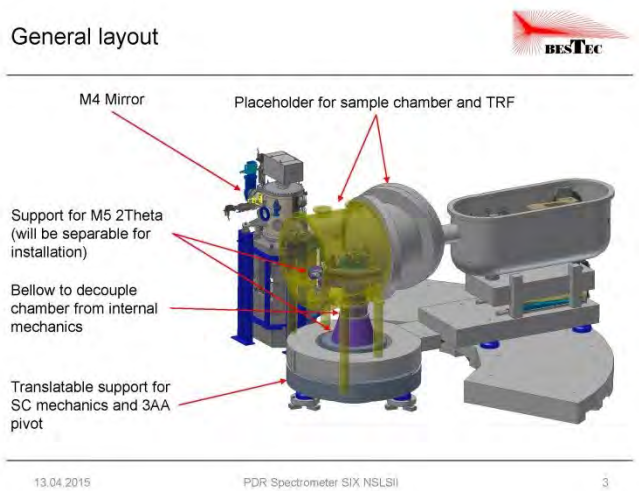

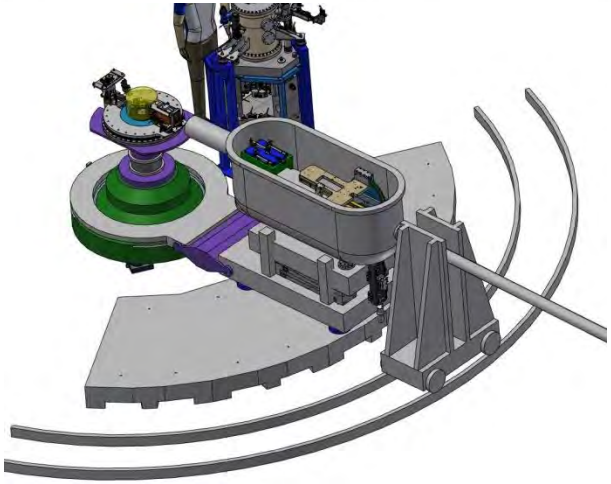

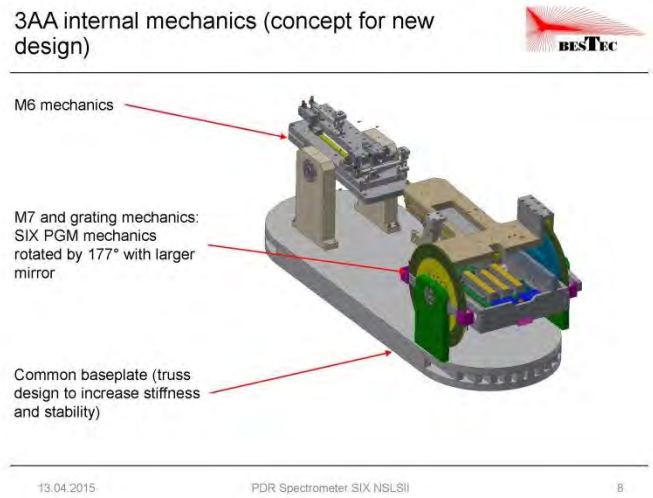

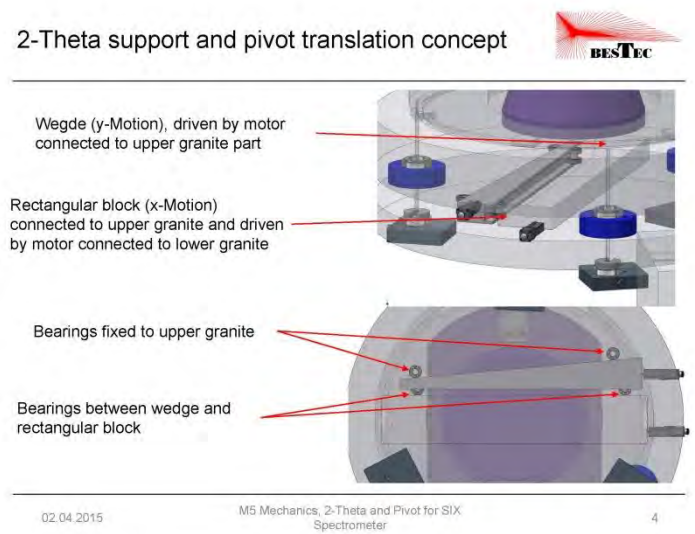

Beampipe Support

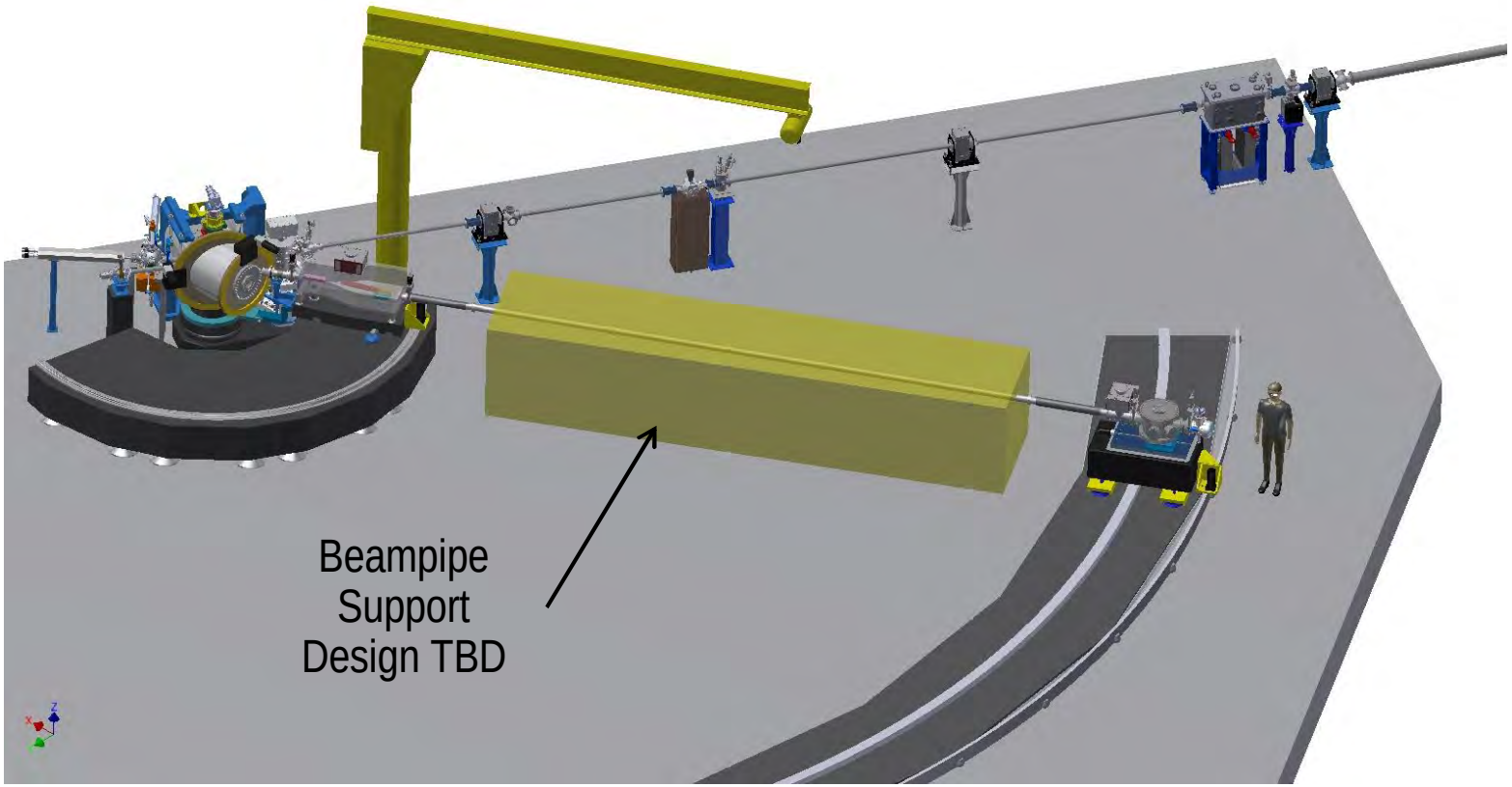

Detector Installation

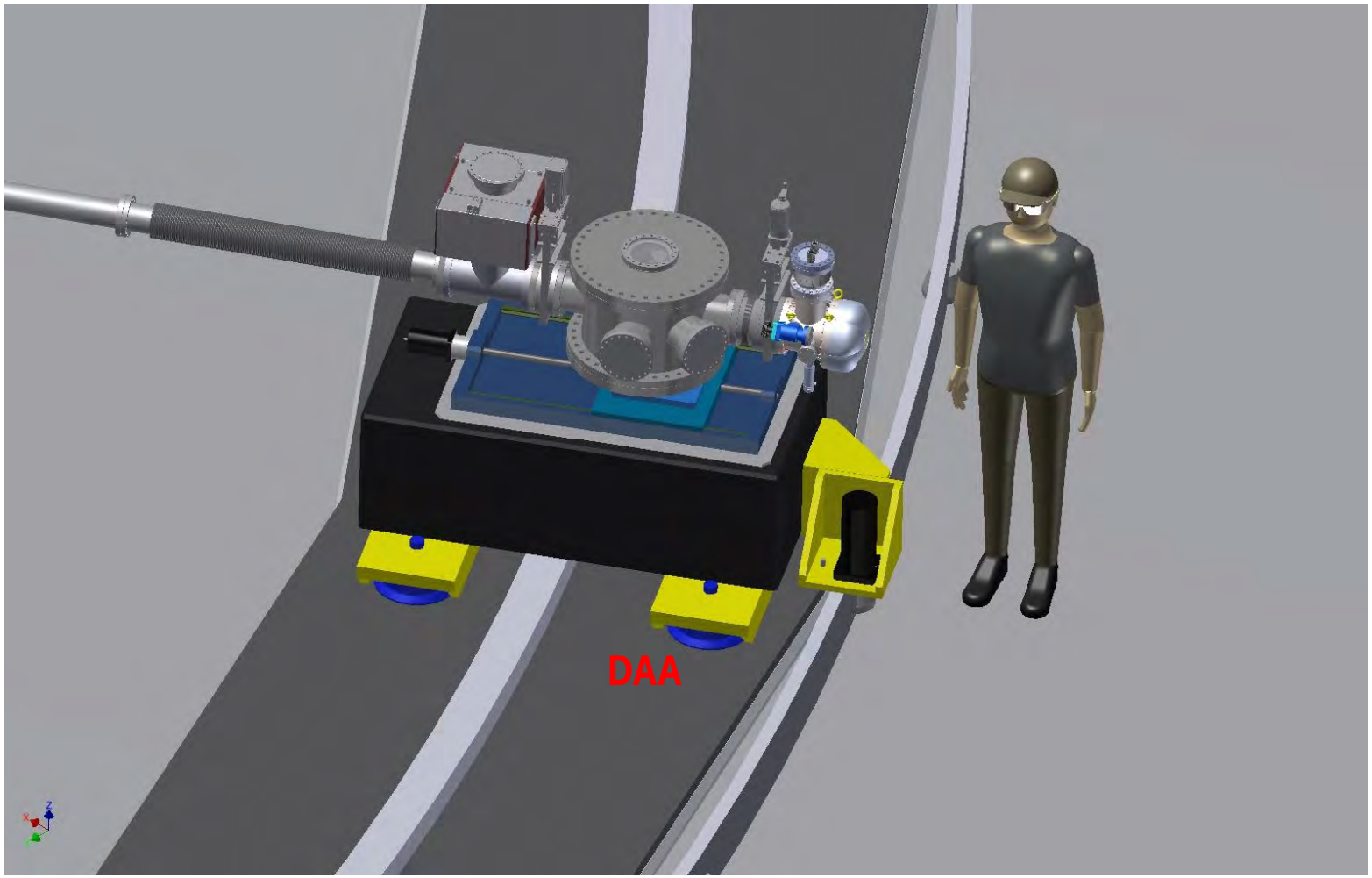

Detector Elements

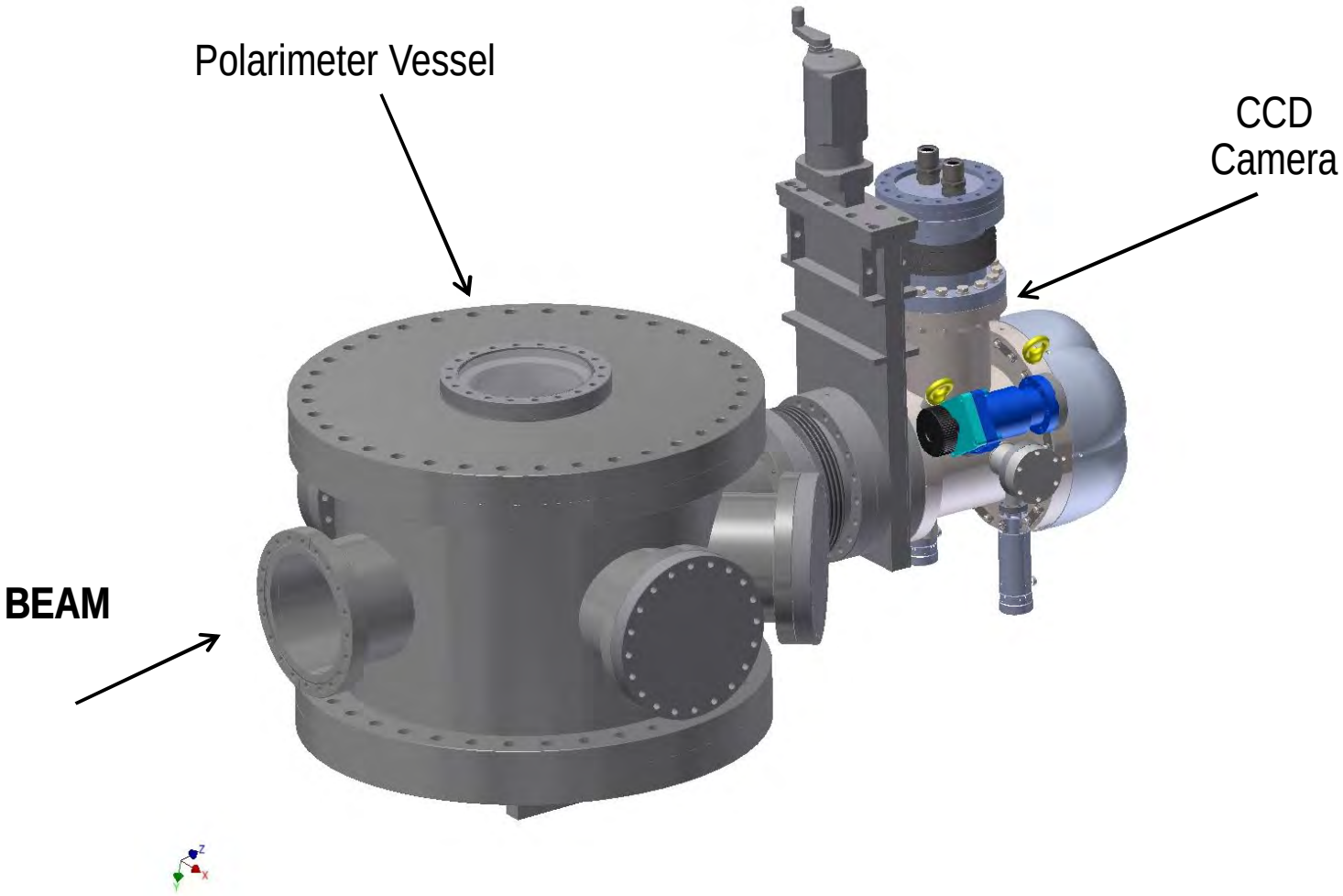

Polarization Configuration

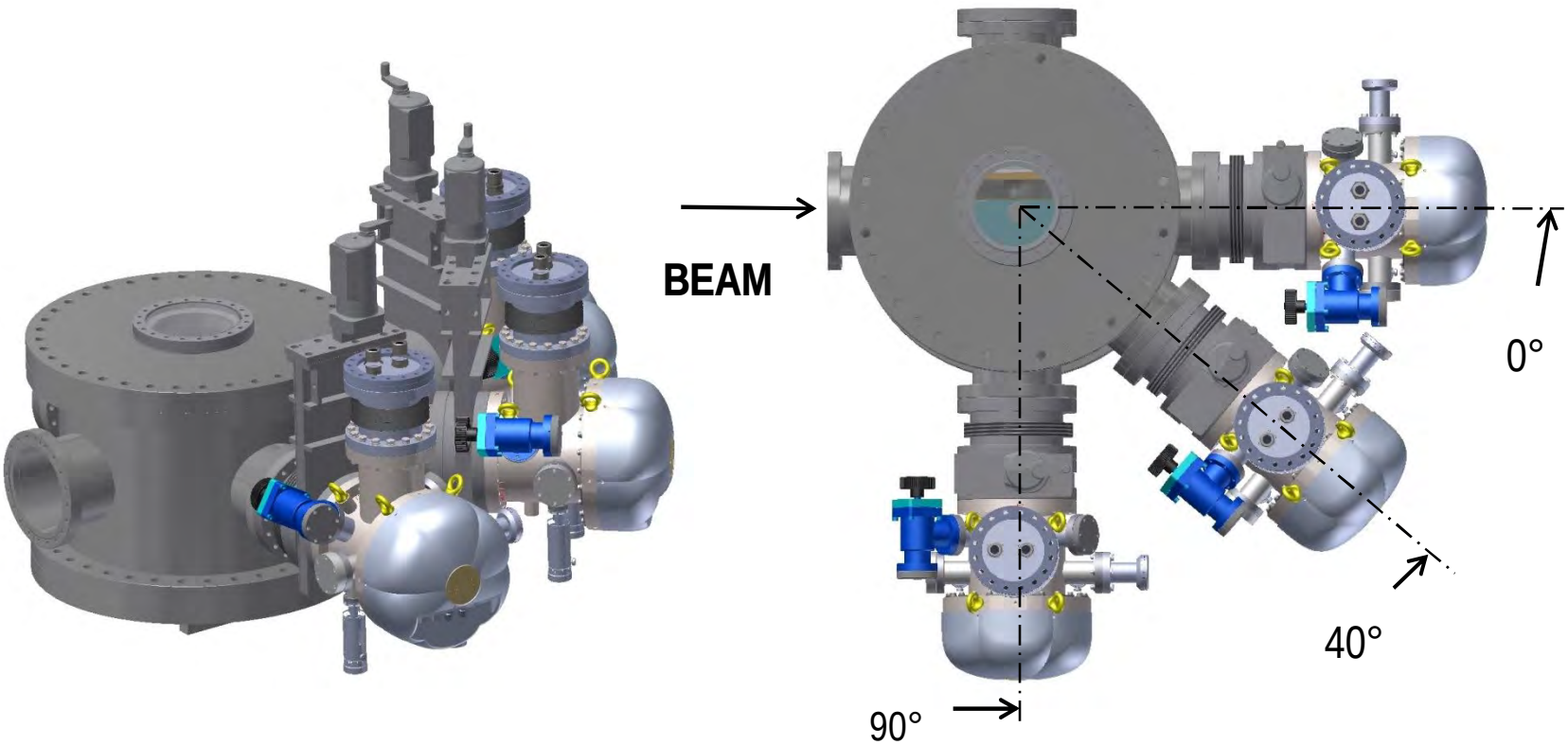

Polarization Elements

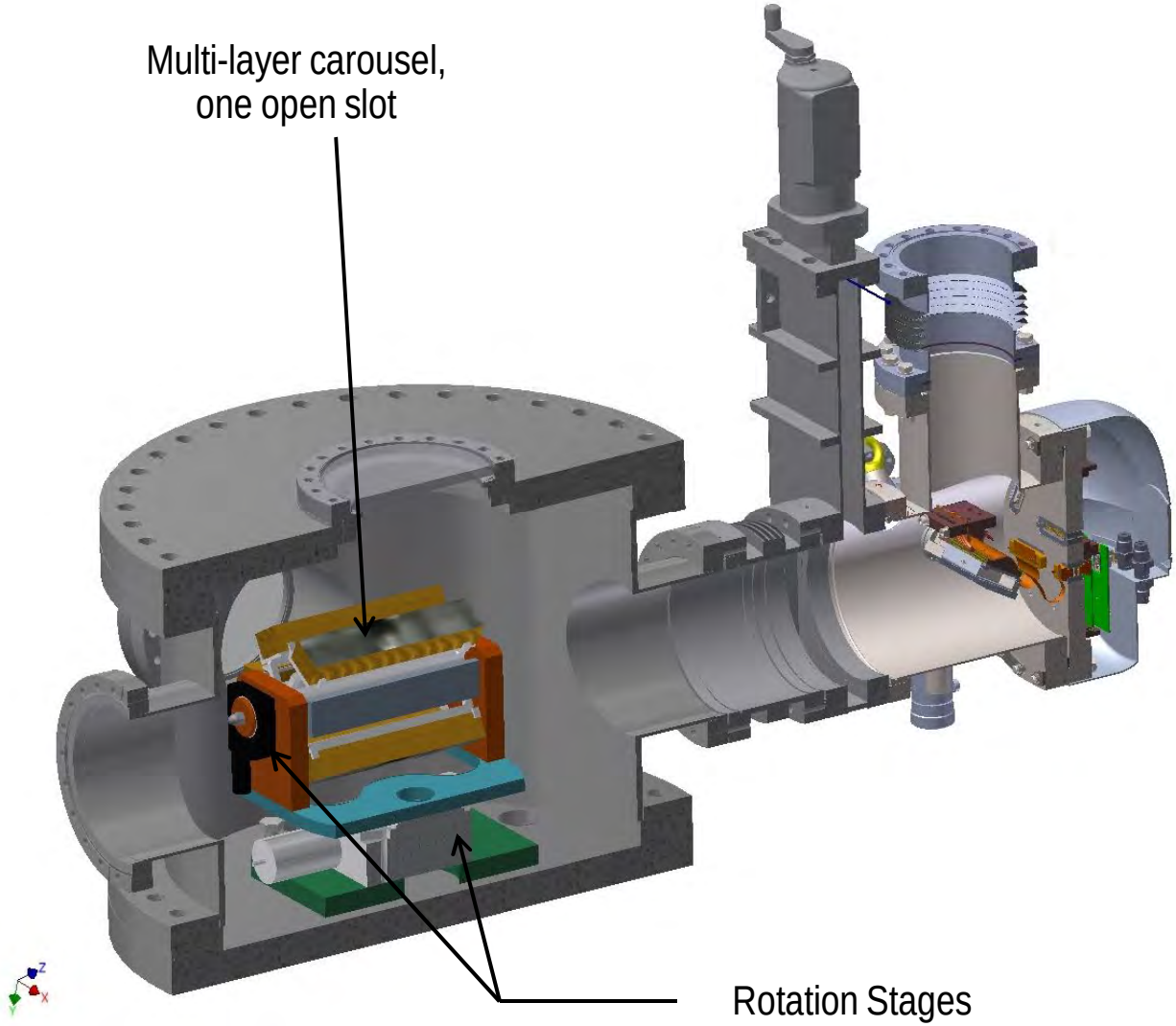

CCD Camera

Latest model from XCAM

- Contract award Feb 2015
- Delivery expected Aug 2016

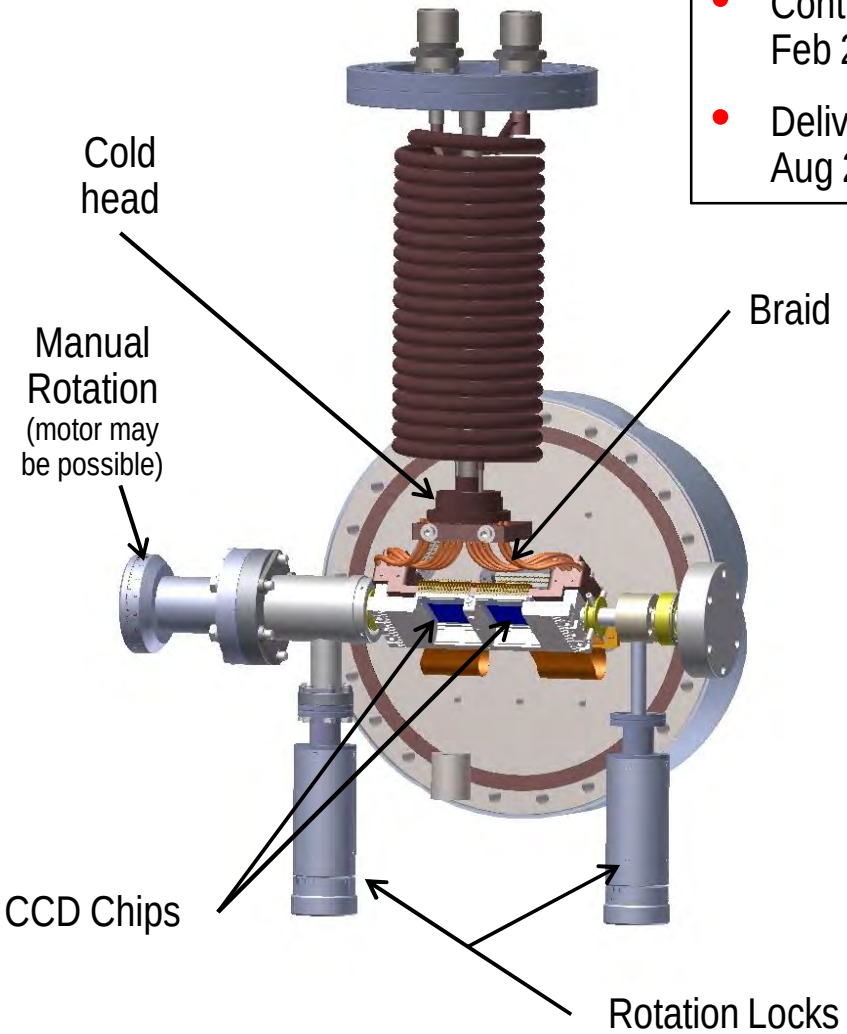

CCD Camera Vibration Isolation

New Mounting Scheme

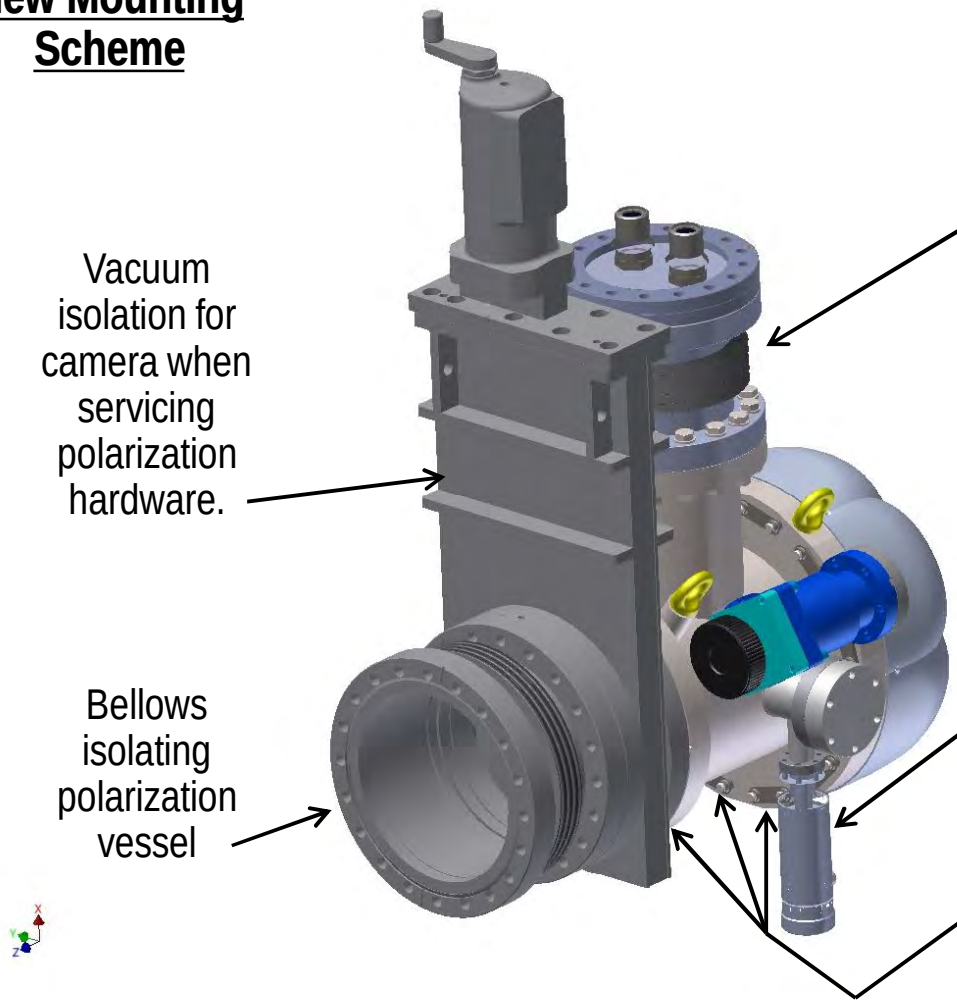

Camera cold head independently supported and isolated by bellows

Vacuum isolation for camera when servicing polarization hardware.

Positive rotation locks

Bellows isolating polarization vessel

Direct mounting to granite support block

Bestec Conceptual Design for DAA

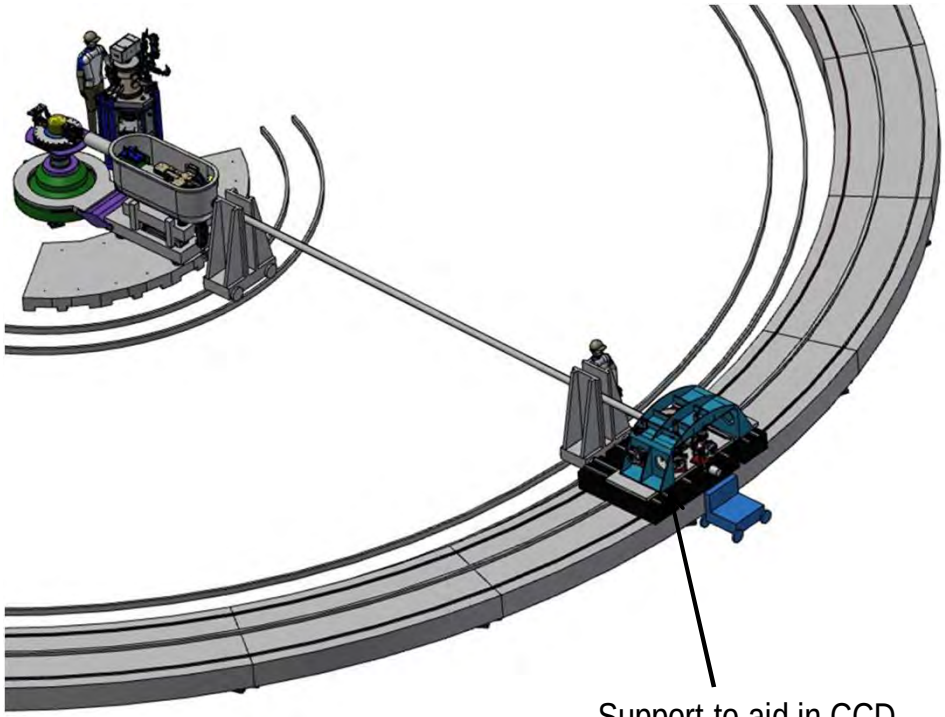

Support to aid in CCD vibration isolation

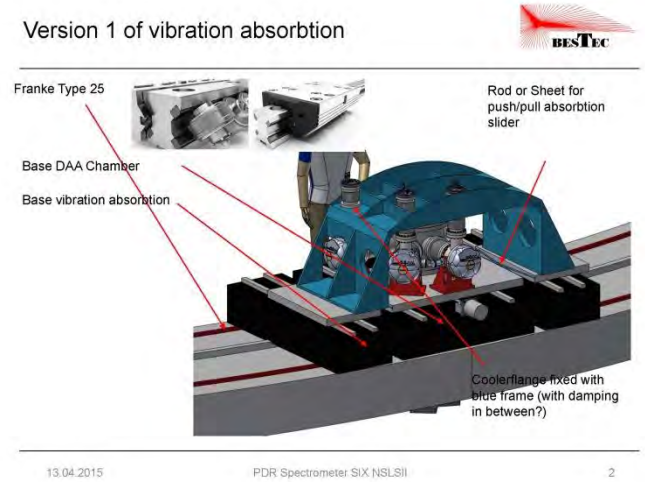

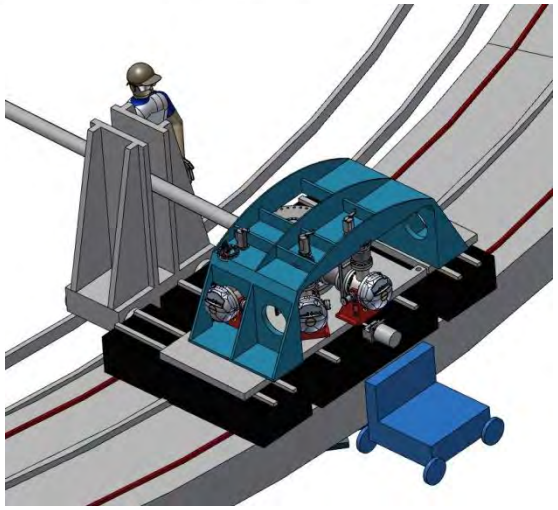

SIX Endstation/Spectrometer Design Review

Optics

J. Dvorak
May 2015

'Centurion'

100,000 resolving power

Outline

Overview of the optical design

Spectrometer performance requirements

Mechanical tolerances required

- explanation of methods used to deduce mechanical tolerances
- how this is converted into the specifications
- overview of the most critical tolerances

Describe a recently proposed (April 2015) optical change to help mitigate risk in the design

Present our alignment procedure for this advanced (and complex) spectrometer

~~Current~~ (as of April) Centurion design: Hettrick-Underwood

Side View

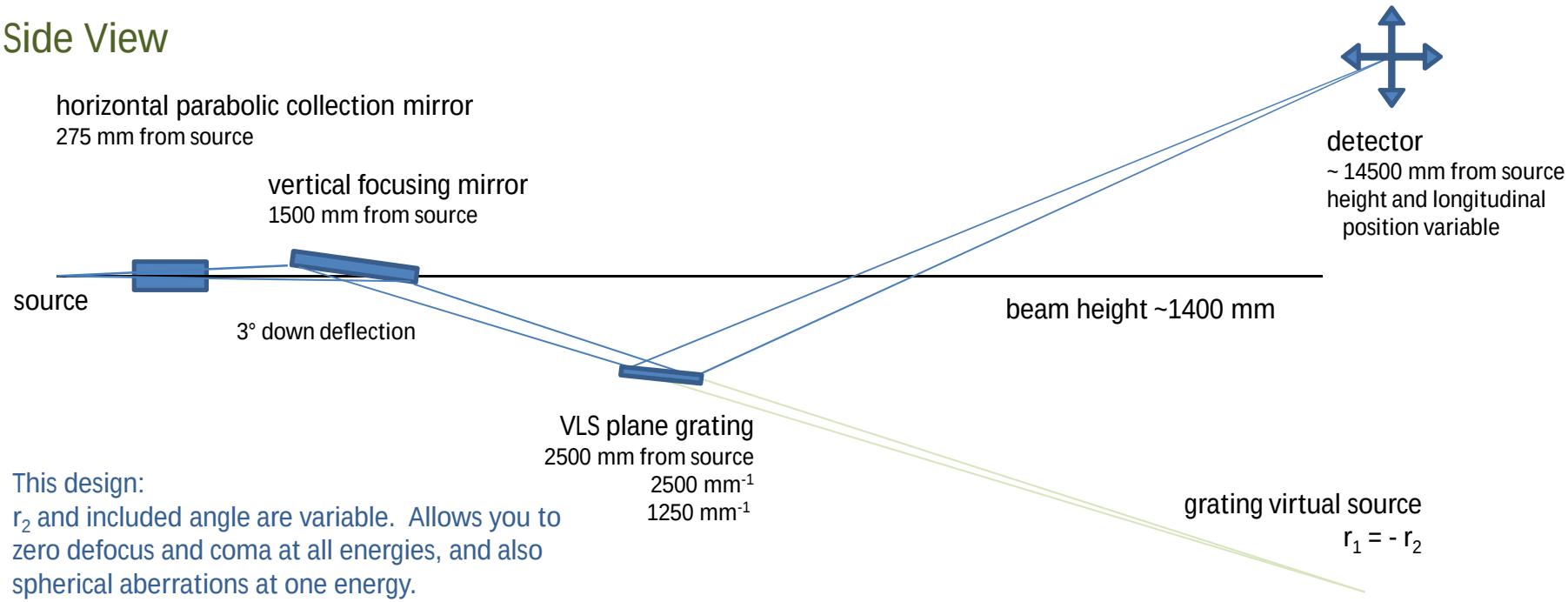

This design:
r_2 and included angle are variable. Allows you to zero defocus and coma at all energies, and also spherical aberrations at one energy.

Plan View

dual branches ~29 mm apart to double the throughput

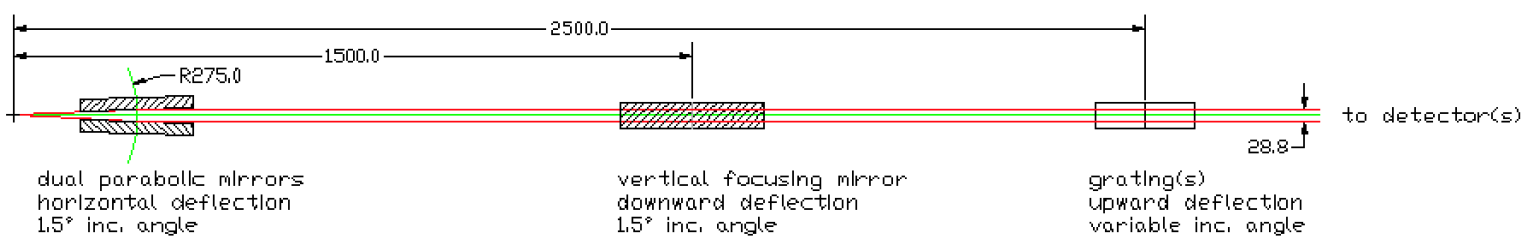

This design has undergone numerous DOE reviews, BAT reviews, and an additional review by external scientists (Strocov, Flora Yackov)

Spectrometer performance requirements

stability criteria – how stable things must be during acquisition of a single spectrum => 1 hour est.

'move' criteria – how far the beam can move on the detector during a change in 2θ of the entire spectrometer arm. This has implications for realignment after a 2θ move.

In the vertical (energy dispersion) direction:

Energy resolution: 10 meV at 1000 eV, RP = 100,000

Stability criterion: any individual motion (eg yaw, pitch, or roll of an optic) should not contribute more than 1 meV broadening to the resolution. Net resolution is then the sum in quadrature of all terms.

Move criterion: we will have an ~ 10 eV energy window on the detector at 1000 eV. A 100 meV shift on detector (0.1 eV) is acceptable.

In the horizontal direction:

Stability criterion optics: 500 um, to keep beam to within ~30 pixels in the horizontal

Stability criterion detector: 25 um, due to potential +/-1º misalignment of H pixel rows of two detectors.

Move criterion: 5 mm (basically, the beam must just stay on the detector in the horizontal direction during a 2θ move)

These performance criteria then need to be translated into detailed mechanical tolerances:

SHADOW is used for each optic to assess the resolution degradation or H motion at the detector for all six degrees of freedom (x, y, z and roll, pitch, yaw)

Example: Vertical focusing mirror

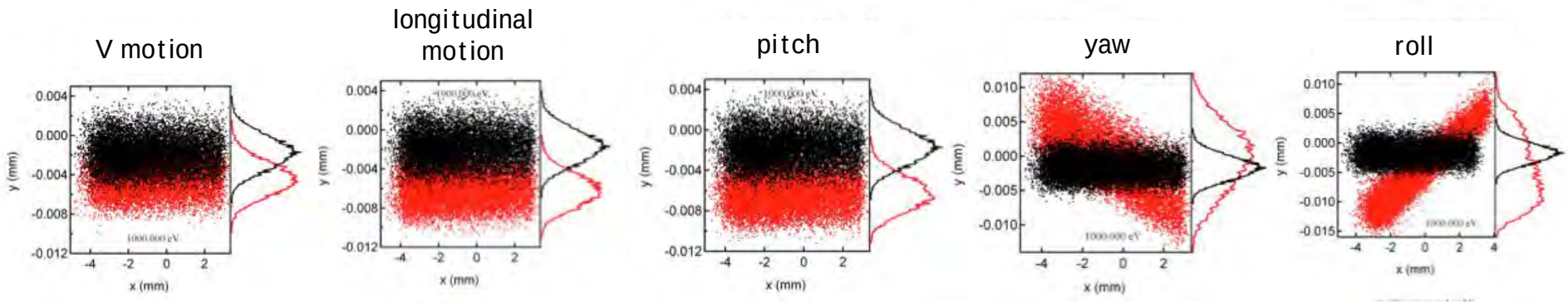

Vertical focusing mirror motion (updated June 2014):

The energy is exquisitely sensitive to the vertical focusing mirror pitch, and very sensitive to its height.

		dE/dx_v	dx_d/dx_v	stability tolerance	reposition tolerance	
		meV/µm	---	µm	µm	
x_v	left-right	0	0	-NC-	-NC-	Figure is planar in this direction assuming a circular cylinder, and motion is orthogonal to dispersion direction. There is no effect on the energy stability.
y_v	up-down	2.68	0	0.37	37	This motion affects both the incident angle on the grating, as well as the position, and the focusing of the virtual source.
z_v	along beam	0.206	0	4.9	490	This motion affects the incident angle on the grating, as well as its position and the focusing of the virtual source.
		meV/µrad	µm/µrad	µrad	µrad	
x_v'	pitch	21.3	0	0.047	4.7	This rotation directly affects the incident angle on the grating.
y_v'	yaw	0.00052	0	2000	>10,000	This rotation distorts the image on the detector, however, the distortion is relatively insensitive to this motion.
z_v'	roll	0.0151	0.68	66	6600	This rotation distorts and shifts the image laterally on the detector.
dx_d/dx_v gives lateral movement on detector						

Example: Alignment of Centers of Rotation

This information can be used then to derive mechanical requirements on the more global motions

Example: 2θ rotation

One of the key concerns is the alignment of the incoming beam focus with the center of rotation of the 2θ spectrometer arm. Misalignment can be viewed as an apparent pitch, yaw, or displacement as the 2θ angle is varied.

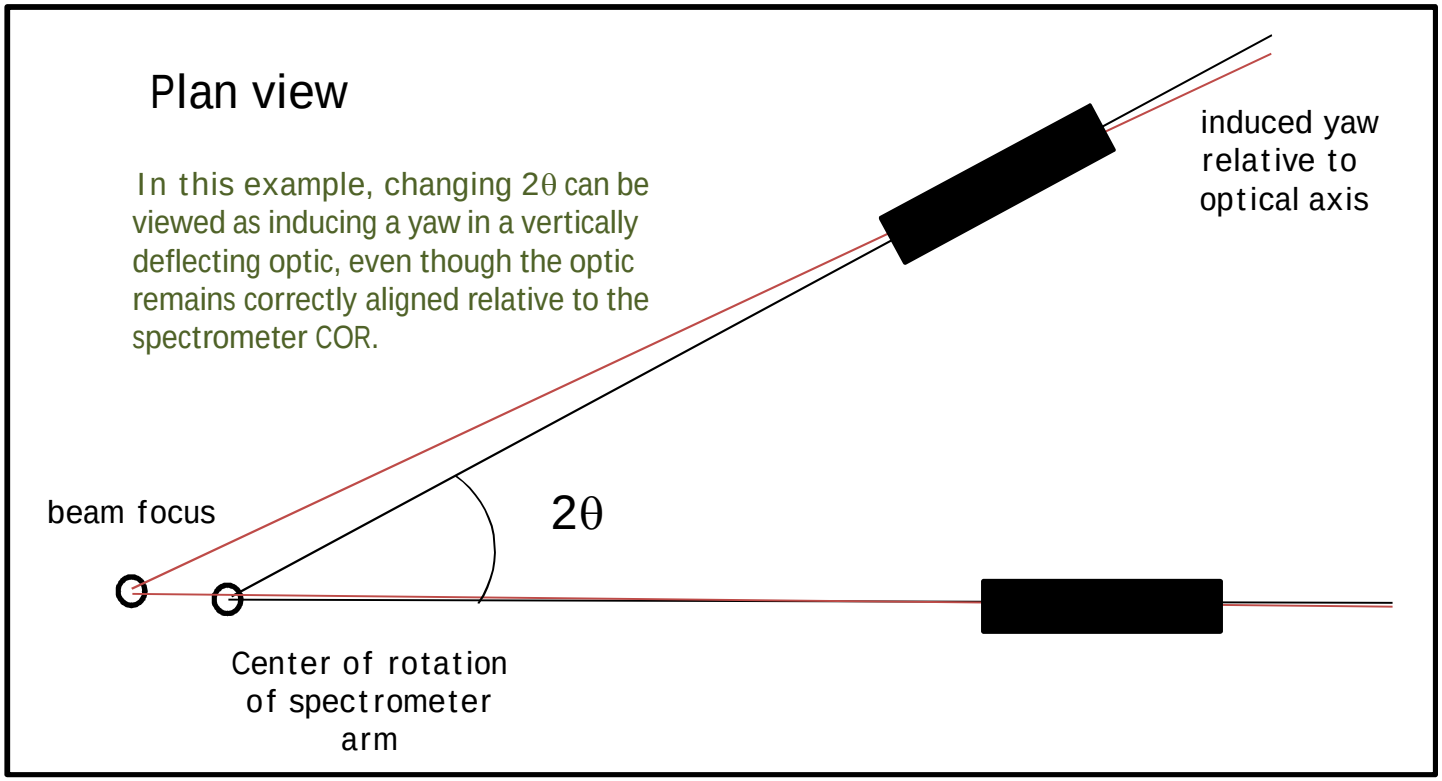

2θ COR of 3 m arm needs to be aligned to within 0.5 mm of sample θ rotation

2θ COR of parabolic mirrors needs to be aligned within 50 um of sample θ rotation

Example: combined misalignment of optics

Grating roll caus
Parabolic mirror
Combined, how c
has importa

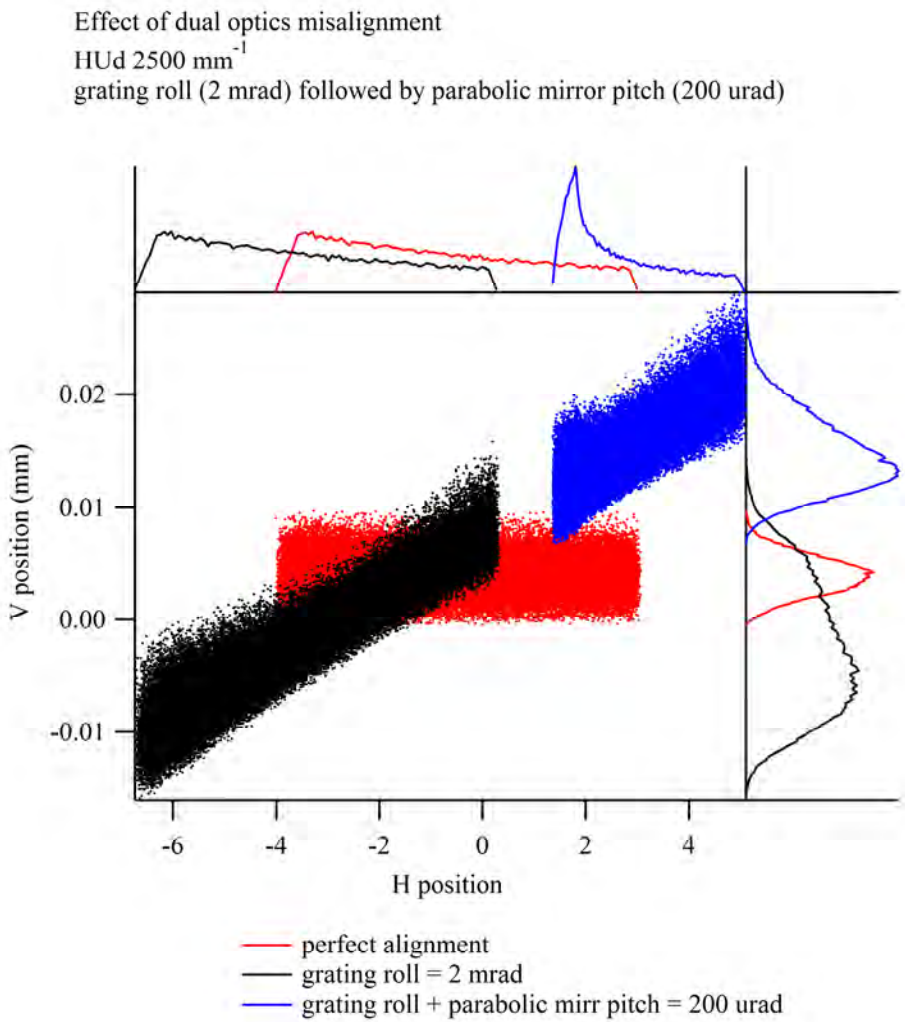

oss detector.

Beam moves along tilt direction.

Overview of the most critical stability tolerances

Parabolic mirrors

lateral motion: 8.1 um
pitch: 15.6 urad

Vertical focusing mirror

vertical motion: 0.37 um
pitch: 47 nrad

Gratings

vertical motion: 0.72 um
pitch: 27 nrad

Detector

vertical motion: 0.37 um
longitudinal motion: 1.5 um
lateral motion: 25 urad

Afficionados can refer to 'SIXspectroMotionAnalysis V3.docx'

Detector

vertical motion: 0.37 um / hr
longitudinal motion: 1.5 um / hr
lateral motion: 25 urad /hr

All of these are really scary!

Problem:

Tuning curve of spectrometer (included angle and r2 required to zero defocus and coma) requires the detector to be lifted high (3.6 m) in the air. This while maintaining very demanding longitudinal and vertical position stability. This while on a stage with 3 motorized degrees of freedom (lateral, longitudinal (0.5 m), and vertical (2.5 m) of a heavy detector chamber.

At the least, you need to monitor:

longitudinal distance: 1.5 um/5 over 15 m = 1 part in 50 million
vertical distance: 0.5 um/5 over 3.5 m = 1 part in 50 million
lateral position: how?

This is completely nontrivial interferometry due to long distances involved, all on a structure with several degrees of freedom.

e.g: pressure fluctuations of 0.06 torr give rise to this path length difference

Because H motion is not along the optical axis, this motion results in an apparent V shift on the sensor. So you are also very sensitive to longitudinal motion as well as vertical.

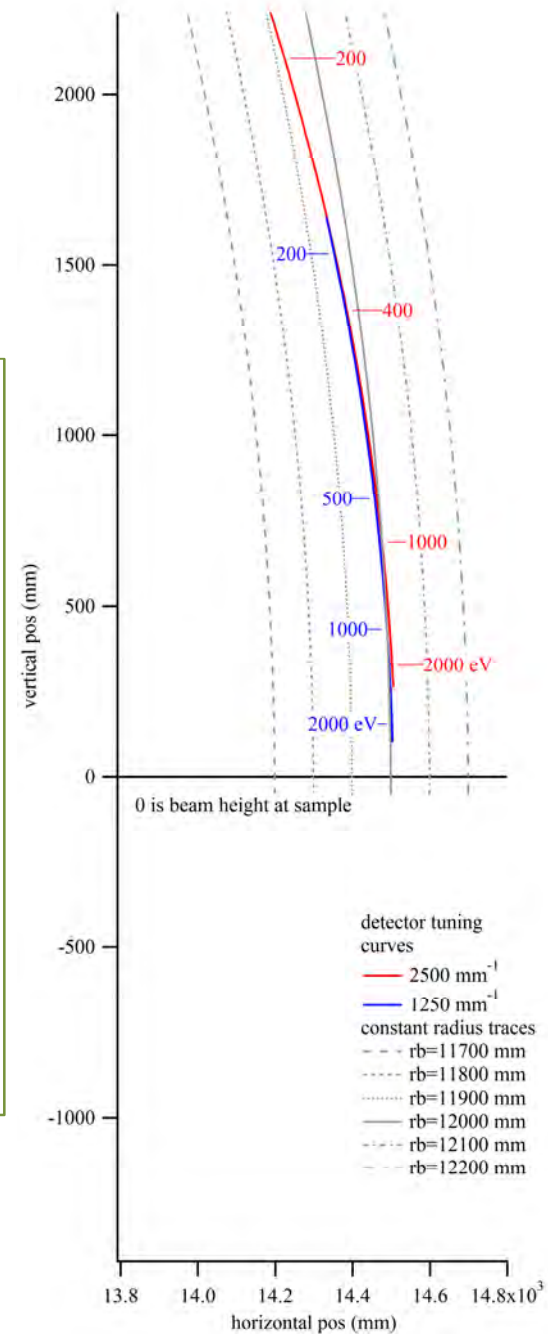

Proposed Solution (April 2015): Add a plane mirror in a PGM like design to keep the output beam at a fixed height.

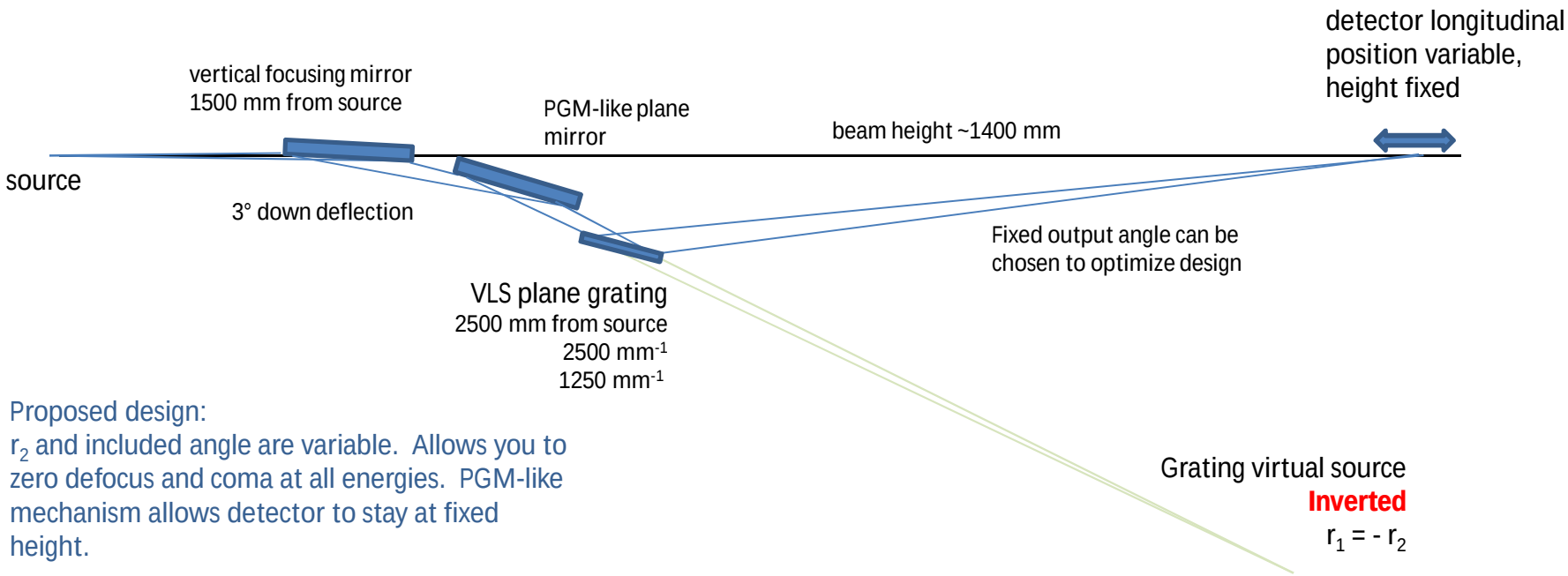

Proposed design:
r_2 and included angle are variable. Allows you to zero defocus and coma at all energies. PGM-like mechanism allows detector to stay at fixed height.

Reimer-Torge Mechanism

With a premirror/grating combination, a combined translation and rotation of the premirror is required to keep the beam centered ***exactly*** on the grating while varying the included angle.
An off-axis rotation of the premirror approximates this to an exceedingly good approximation for the angles required in the soft x-ray range. This requires a longer premirror.

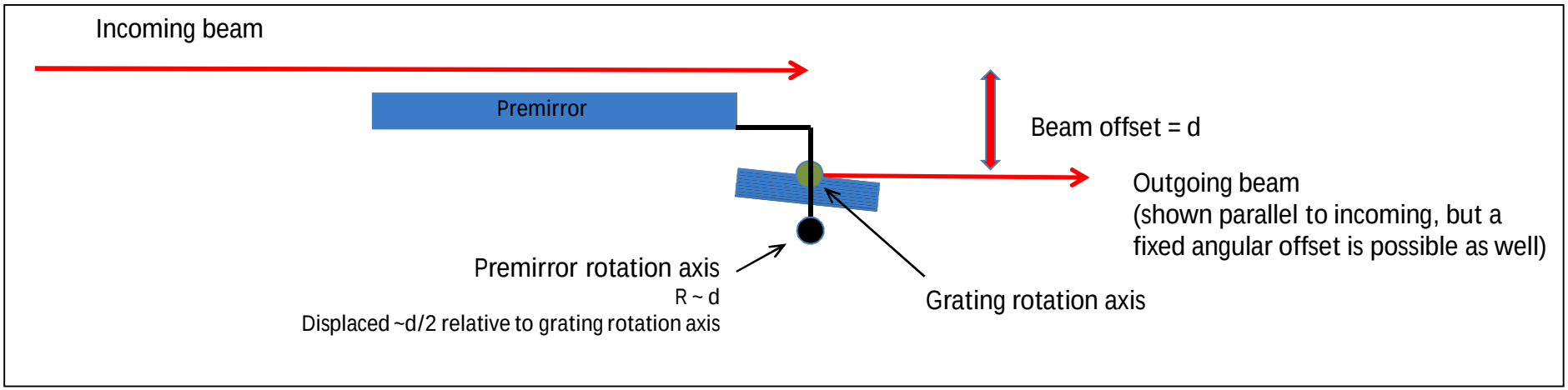

With the premirror rotated, the included angle is variable and the beam hits the center of the grating to a very good approximation.

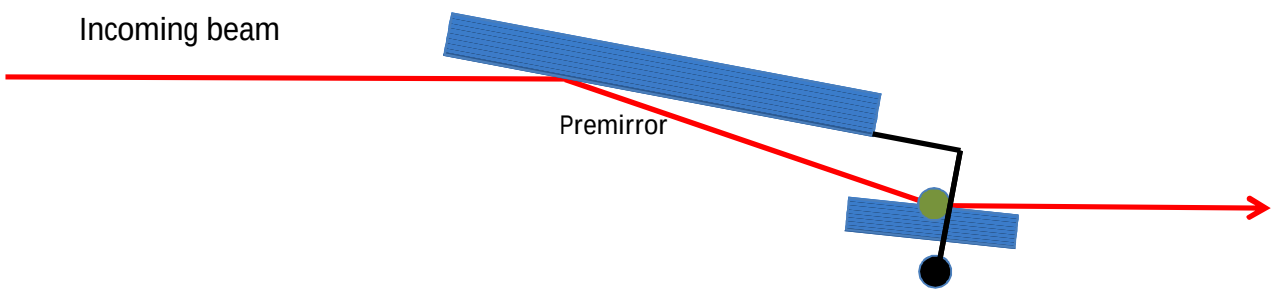

This scheme works with either a pre or post mirror.

F. Riemer and R. Torge , NIM V208 (1983) 313.
Pimpale, S. K. Deshpande, and V. G. Bhide Applied Optics V30 (1991) 1591.

As with any other design change to a complex instrument, there are advantages and tradeoffs, and the danger of unforeseen consequences of the change.

Therefore, the optical design change has been reviewed by two experts in HU spectrometers (Yi-De Chuang, Sorin Chizubaian). I simply summarize the results on the next slide.

Afficionados can refer to '2015.03 CenturionPGMproposal V3.pptx'

Modified stability requirements based on new optical design:

Parabolic mirrors (unchanged)

Vertical focusing mirror

vertical motion: 0.37 um -> 0.17 um
pitch: 47 nrad -> unchanged

Plane premirror

vertical motion: 0.32 um
pitch: 37 nrad

Gratings

vertical motion: 0.72 um-> unchanged
pitch: 27 nrad -> unchanged

Detector

vertical motion: 0.37 um -> unchanged
longitudinal motion: 1.5 um -> ~1 mm
lateral motion: 25 urad -> unchanged

Advantages:

- Eliminate need to raise the detector – great mechanical simplification
- Detector height stability is still critical, but this is now fixed
- Detector longitudinal stability – since the horizontal motion is now nearly along the optical axis, this stability now is determined by the depth of focus, which is several mm. This motion now is much less critical.
- Replace very challenging unknown stability risks with known stability performance
- Eliminate the need for very difficult interferometry to track the detector distance
- Optics and detector are now at (nearly) the same height -> differential interferometry of HLS become possible
- easy to incorporate increased angular range (eg – multilayer gratings in high order) for future upgrades.

Disadvantages:

- Some minimal loss in resolution – plane mirrors can now be polished to 50 nrad slope error over a 200 mm footprint, and Bestec has demonstrated 20 nrad pitch stability on their PGM mechanisms.
- Some loss in flux – unfortunate, but cannot be avoided
- One more optic to align
- Due to virtual source inversion, Amemiya eqns for coma and spherical aberrations no longer work. Need to find parameters via raytracing.
- VFM height stability tolerances are 2x more stringent (0.17 um/hr).
- Premirror height stability tolerances are stringent (0.32 um/hr).

Premirror reflectivity

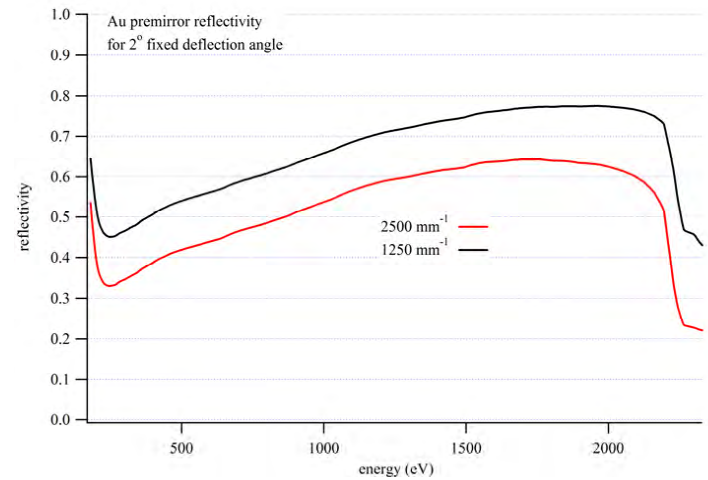

Net resolution

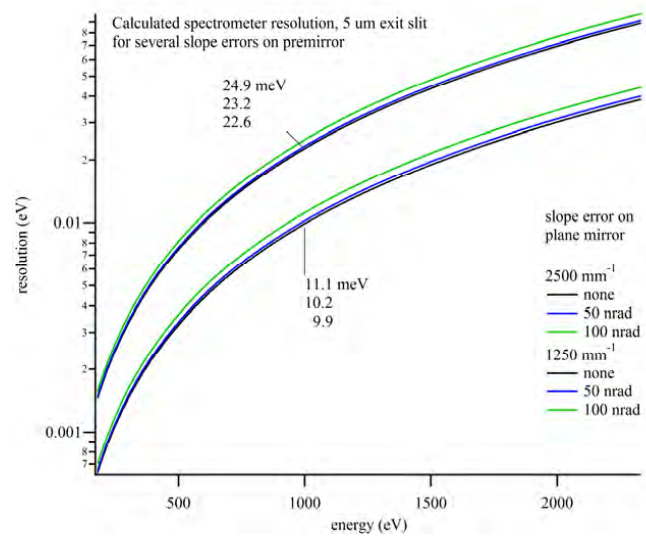

Why we think this reduces risk

- Thermal stability required for 3.5 m high structure is 0.012 C/hr

  for a 1 m structure = 0.03 C/hr (3 times less stringent)

- Vibration of the satellite floor is 100 um rms (integrated to 2 Hz). This will be amplified by an unknown factor by a very large, complex structure with several degrees of freedom.
- Plane mirrors can be polished to 50 nrad slope error over 200 mm
- PGM-like pitch mechanism have been proven to be very stable (< 20 nrad)

SIX PGM grating (11 nrad rms)

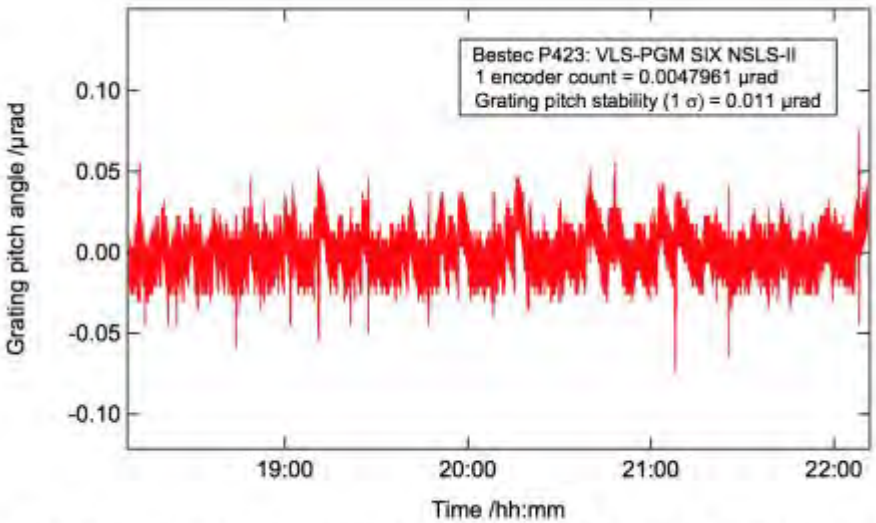

Figure 13: Long term gratings pitch angle stability. Encoder data are neither averaged nor filtered.

Alignment procedure for this advanced spectrometer

Refocusing ellipsoid (M4) alignment procedure

The final refocusing optic is an ellipsoid of revolution with a 6:1 demagnification. The final focus is ~ 2 um H x 0.26 um V. It is not trivial to visualize such a small beam with optical methods (YAG+optics+camera). We have been warned that this is a very difficult optic to align.

Knife edge or pinhole scans are possible, but tedious, and only give you information about the beam profile at one point (eg – with a single beam profile, you don't know if you are in front of or behind the best focus). Also, a single scan may tell you your alignment is bad, but it doesn't tell you why. A scanning "beamlet" measurement gives more information, but you still need to visualize the focus to several um's.

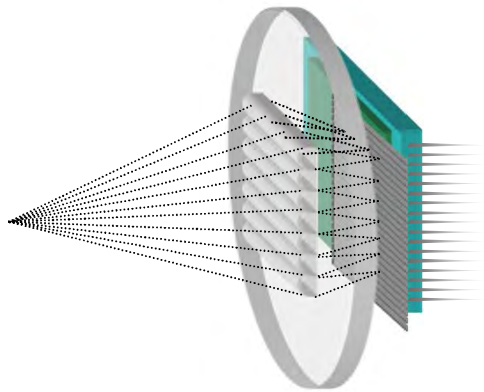

Basic principle: the focused beam diverges onto a screen with pinholes far from the focus, which then are detected by a CCD camera a known distance away. You essentially take a sampling of 'rays' across beam, which are normal to the local wavefront. Knowledge of the local wavefront (with sufficient # of points) allows you to reconstruct the wavefront intensity and phase.

You don't measure the focus. You measure the wavefront (phase and intensity) far from the focus, and back propagate to infer the focus. Thus you don't need any optics intruding into the sample space.

We plan to utilize a Shack-Hartman wavefront sensor:

- Developed at Soleil for synchrotron applications
- Very effective in aligning complex optics, as you can measure a distorted wavefront, and you can calculate how the optic is misaligned. You have far more information than just the intensity profile at a single longitudinal position.
- Fast: several minutes for acquisition, readout, and calculation of back propagated beam per iteration
- Very effective in locating focus longitudinal position (8 um sensitivity)
- These are not cheap! (~ 100K $)
- If you want to know more, please ask Mourad. Mourad has played a key role in the development of Shack-Hartmann devices for xray focusing and metrology applications. We are relying on his expertise.

“In Chamber” Elements

Alignment of the parabolic mirror stage with the beam

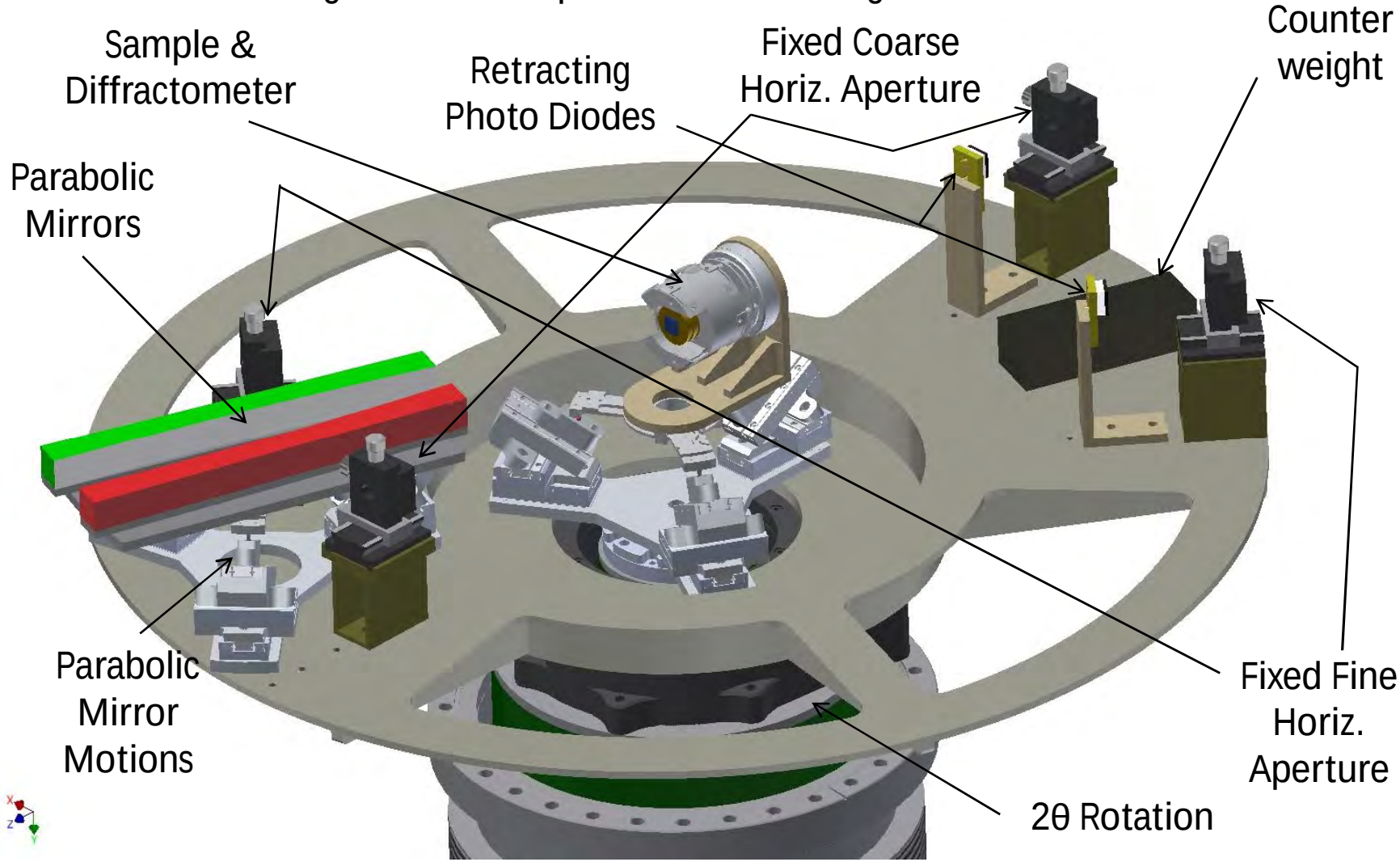

Also will have a retractable 4 quadrant photodiode somewhere after the chamber exit

X-ray alignment of θ, 2θ centers of rotation and parabolic mirrors

Bring COR to the beam

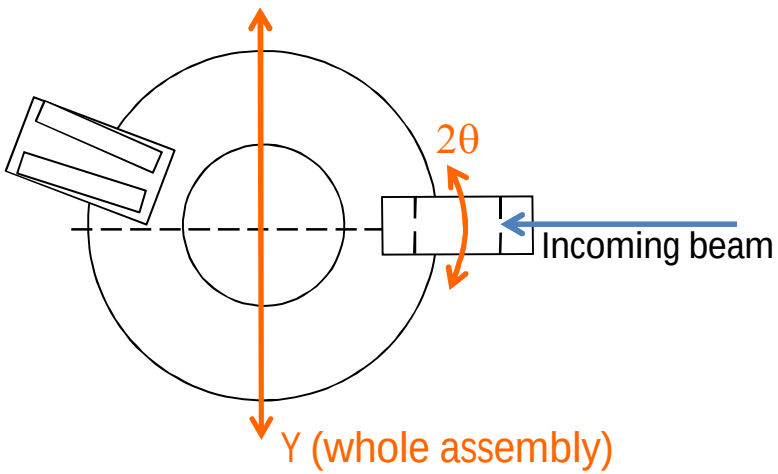

- Scan 2θ and Y to let incoming beam go through both slits (may need to have one retractable photodiode after each slit). Here the Y motion is given by the granite block with integrated air bearing on the basis of the sample chamber.
- Once beam goes through both slits, we know the COR of θ and 2θ is on the path of the beam.

Align parabolic mirrors' optical axis to COR

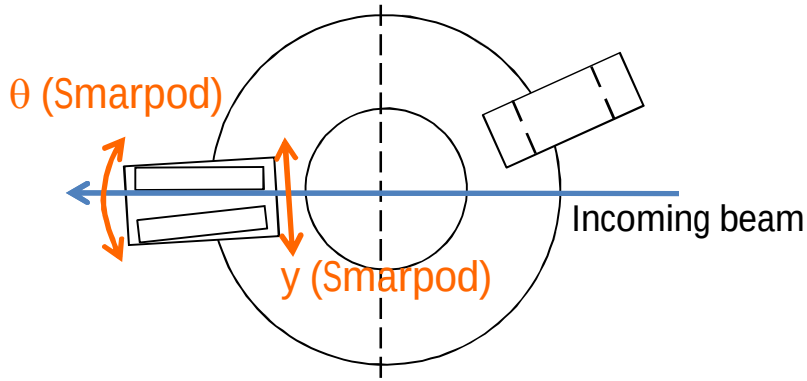

- Move 2θ to where either parabolic mirror's surface is supposed to be parallel with the incoming beam.
- Scan θ and y of Smarpod supporting parabolic mirrors to refine parallelism between mirror surface and incoming beam (looking at photodiode fixed to sample chamber wall).
- Now we know that parabolic mirrors are 'looking at' the COR of θ and 2θ.
- Note: can also roughly look with quadrant photodiode at roll of each parabolic mirror

X-ray alignment of θ, 2θ centers of rotation and parabolic mirrors (cont'd)

Bring COR to focal point of incoming beam

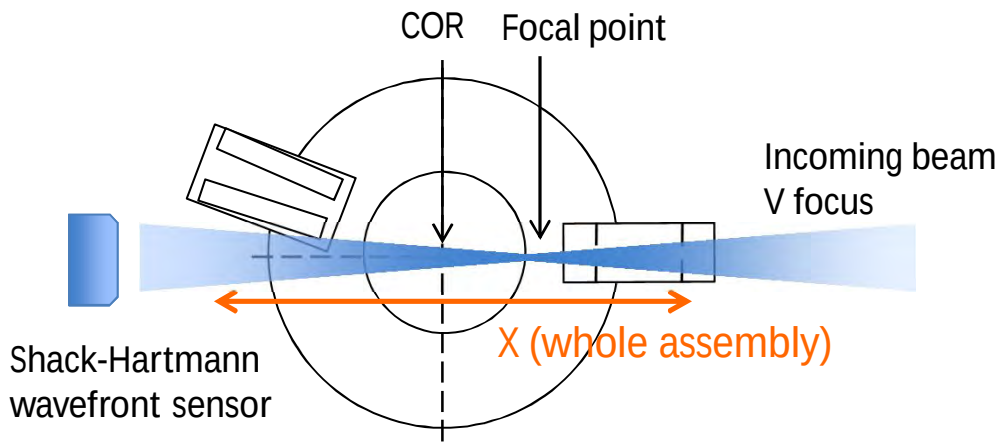

- Determine distance between Shack-Hartmann wavefront sensor on back of chamber and best focus along beam path. Accuracy should be significantly better than depth of focus.

- Offset the whole assembly X (granite basis with integrated air bearing) by the amount needed to match the COR with the best focus. Or adjust the longitudinal position of the focus by adjusting M4

Parabolic mirror mask

Straight thru beam

Beam off of parabolic mirrors

Key to spectrometer alignment will be a mask at the downstream end of the parabolic mirrors. This mask will travel vertically, and will have two positions, one in which just the directly scattered beam exits the chamber, and another in which just the beam intercepted and collimated by the parabolic mirrors exits the chamber.

Alignment of the VFM

With a strong scatterer or appropriate multilayer in the sample position, and directly scattered beam exiting the chamber, the initial alignment of the VFM is done with the grating in zero order position.

Alignment of the grating

Still using the directly scattered beam, the alignment of the grating, and fine tuning of the grating/VFM pair is performed using the first order diffracted beam.

Alignment of the parabolic mirrors

The parabolic mirror mask is moved to allow only beam intercepted by the parabolic mirrors to pass through the spectrometer, and alignment of the parabolic mirrors is done.

Thank You

Centurion Optical Design Proposal

J. Dvorak

April 9, 2015

Current Centurion design: Hettrick-Underwood

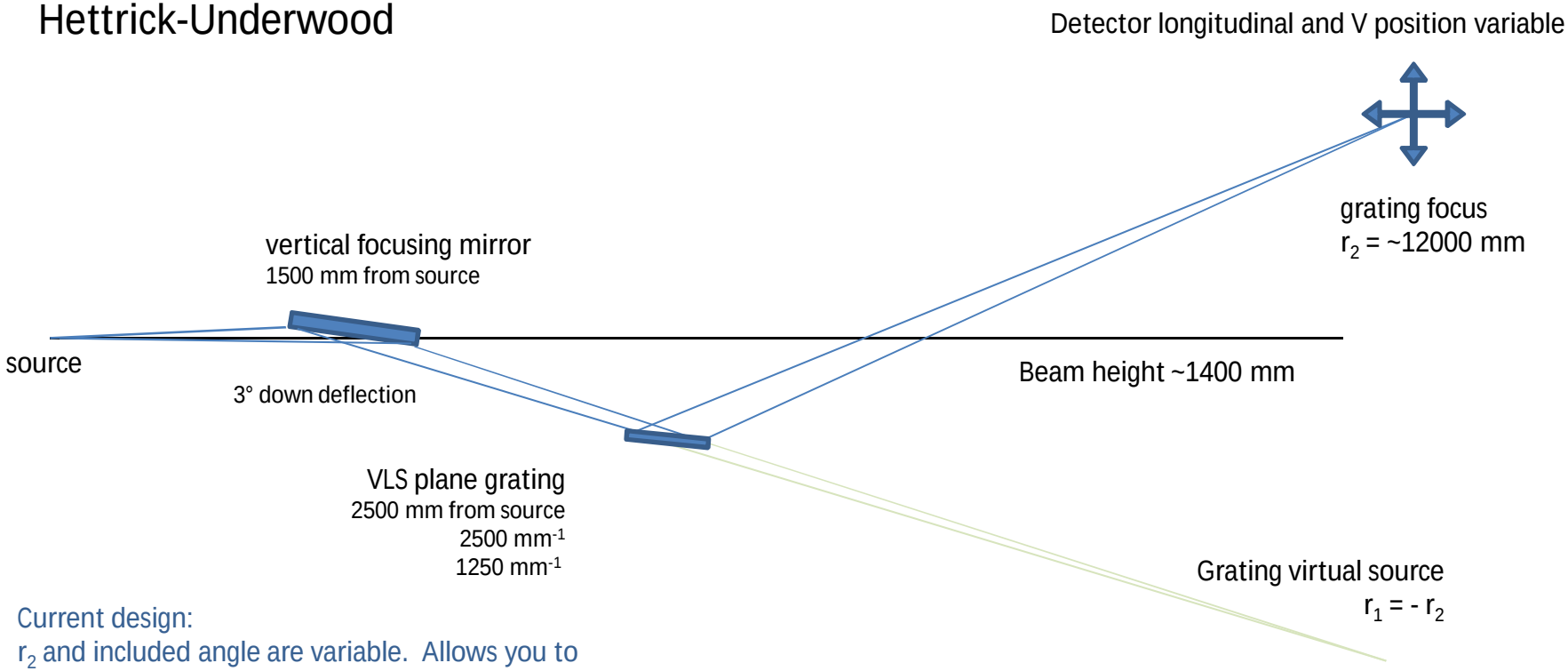

Current design:
r_2 and included angle are variable. Allows you to zero defocus and coma at all energies

This design has undergone numerous DOE reviews, BAT reviews, and an additional review by external scientists (Strocov, Flora Yackov)

Problem:

Current tuning curve of spectrometer (included angle and r2 required to zero defocus and coma) requires the detector to be lifted high in the air. This while maintaining very demanding longitudinal and vertical position stability.

The graph at the right shows the detector position versus energy relative to the beam height (nominally 1419.25 mm) at the sample. The maximum detector height is ~3.6 m high at a distance of 14.5 m from the sample.

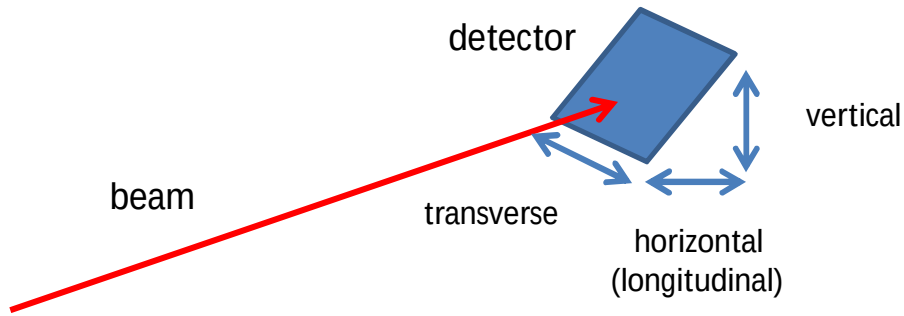

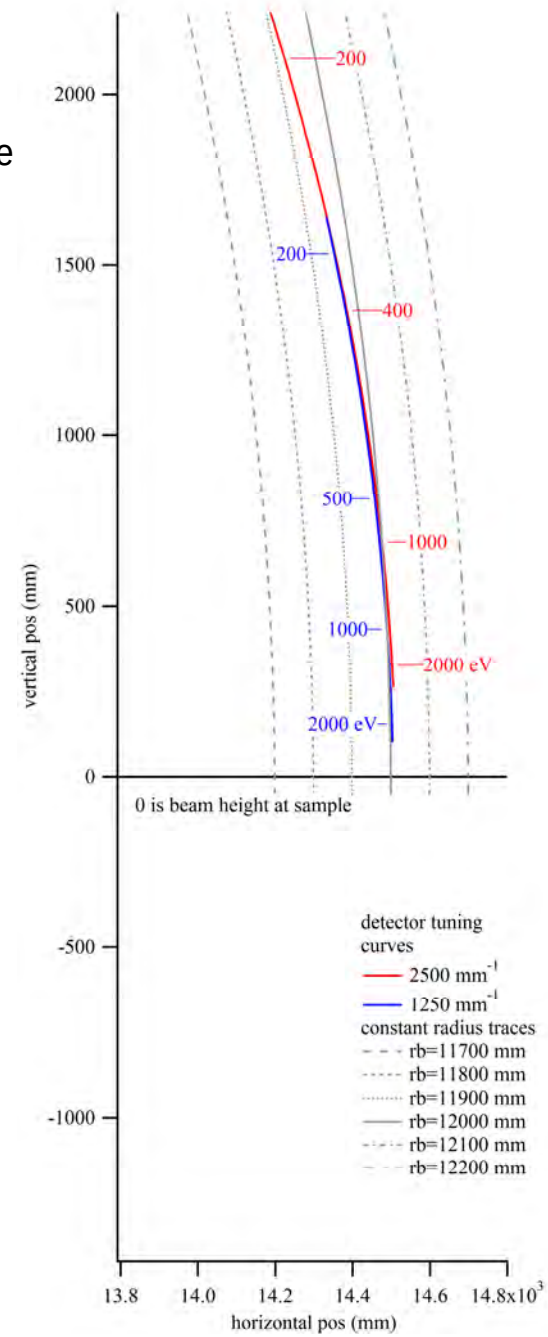

Detector positional tolerances:

Vertical – 0.43 um/hr

Horizontal – 1.5 um/hr (dependent upon detector height, less sensitive near horizon)

Transverse = 0.43 um/hr*(1/tanθ), θ = misalignment of pixel rows with horizontal

= 0.043um/hr*(1/0.010 rad) = 43 um/hr

Because H motion is not along the optical axis, this motion results in an apparent V shift on the sensor. So you are also very sensitive to longitudinal motion as well as vertical.

Will require extremely challenging interferometry: 1 part in 10^8

Proposed: Add a plane mirror in a PGM like design to keep the output beam at a fixed height.

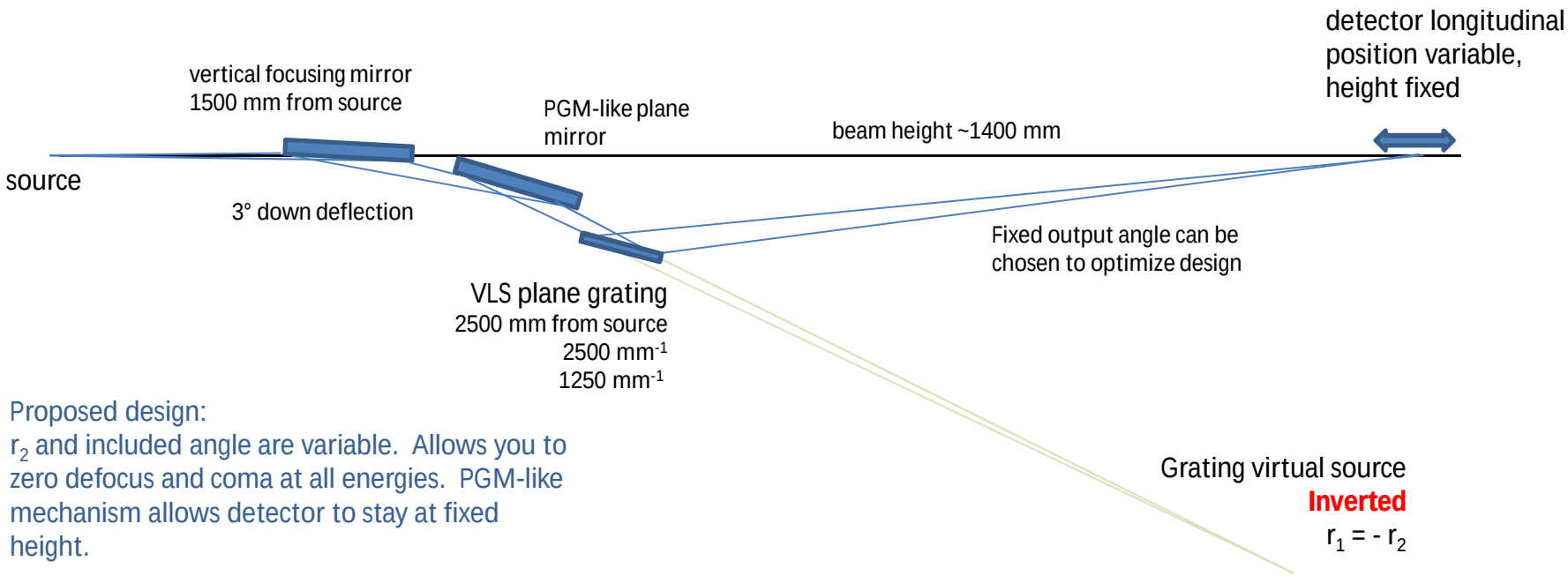

Proposed design:
r_2 and included angle are variable. Allows you to zero defocus and coma at all energies. PGM-like mechanism allows detector to stay at fixed height.

Advantages:

Eliminate need to raise the detector – great mechanical simplification

Detector height stability is still critical, but this is now fixed

Detector longitudinal stability – since the horizontal motion is now nearly along the optical axis, this stability now is determined by the depth of focus, which is several mm. This motion now is much less critical.

Replace very challenging unknown stability risks with known stability performance

Eliminate the need for very difficult interferometry to track the detector distance

Disadvantages:

Some loss in resolution – will be shown to be minimal – plane mirrors can now be polished to 50 nrad slope error over a 200 mm footprint, and Bestec has demonstrated 20 nrad pitch stability on their PGM mechanisms.

Some loss in flux – unfortunate, but cannot be avoided unless you go with a multilayer pre-mirror, which would need to be graded.

One more optic to align

Due to virtual source inversion, Amemiya eqns for coma and spherical aberrations no longer work. Need to find parameters via raytracing.

VFM height stability tolerances are 2x more stringent (0.17 um/hr).

Premirror height stability tolerances are stringent (0.32 um/hr).

Basic design considerations for a fixed output direction PGM-like mechanism:

1. Either a pre or post mirror works for beam redirection / included angle tuning. Which is best from a mirror length and resolution perspective?
2. Reimer Torge parameters -> beam offset, radius of rotation, and position of rotation center of plane mirror.
3. Fixed deflection angle of PGM mechanism (this is normally taken as outgoing beam direction = incoming beam direction, but this is not required. Has implications for reflectivity of premirror.
4. Length of plane mirror required.
5. Can it fit into the existing geometry?

Reimer-Torge Mechanism

With a premirror/grating combination, a combined translation and rotation of the premirror is required to keep the beam centered ***exactly*** on the grating while varying the included angle.
An off-axis rotation of the premirror approximates this to an exceedingly good approximation for the angles required in the soft x-ray range. This requires a longer premirror.

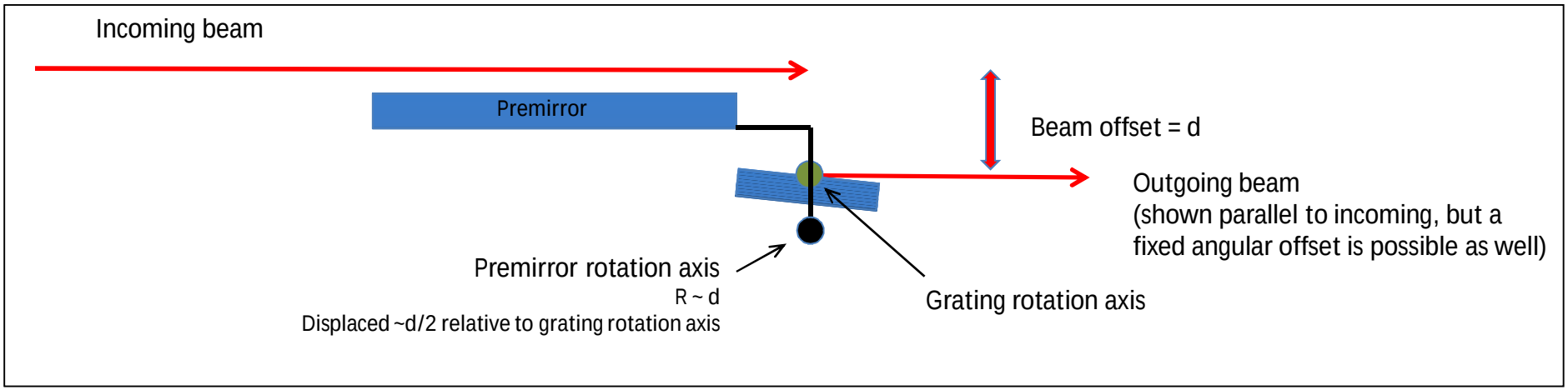

With the premirror rotated, the included angle is variable and the beam hits the center of the grating to a very good approximation.

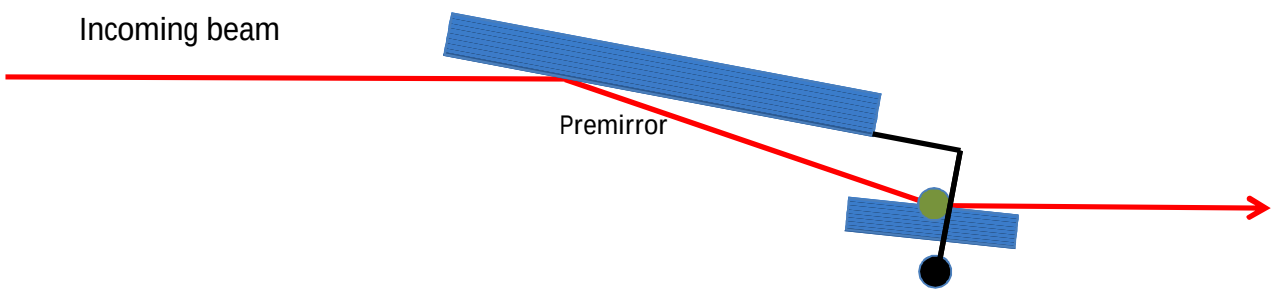

This scheme works with either a pre or post mirror..

F. Riemer and R. Torge , NIM V208 (1983) 313.
Pimpale, S. K. Deshpande, and V. G. Bhide Applied Optics V30 (1991) 1591.

Reimer-Torge Mechanism: Pitch stability

Our experience on stability: Bestec is currently providing the monochromator for both the SIX and ESM beamlines. The SIX instrument is aready built and has been factory tested by Bestec. The long term stability of the pitch mechanisms without cooling water flow is exceptional.

Four hour scans of rotary encoder, bandwidth up to 200 Hz

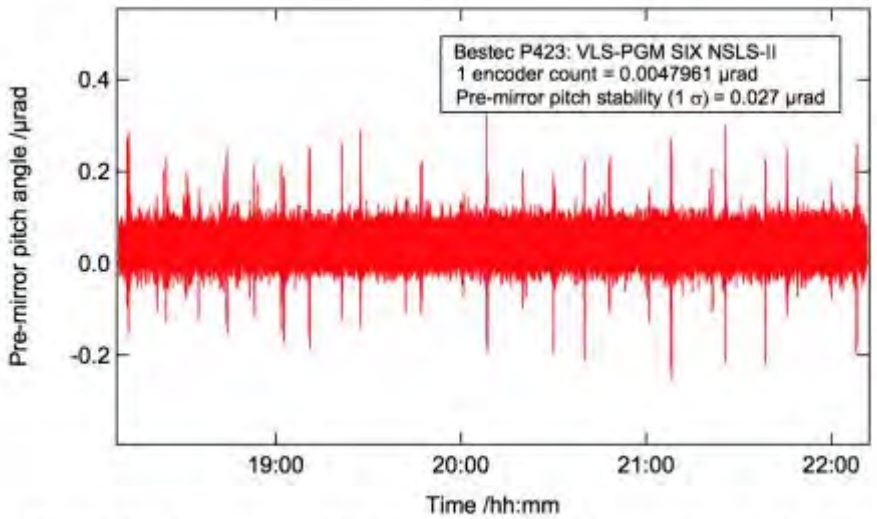

Figure 12: Long term pre-mirror pitch angle stability. Encoder data are neither averaged nor filtere

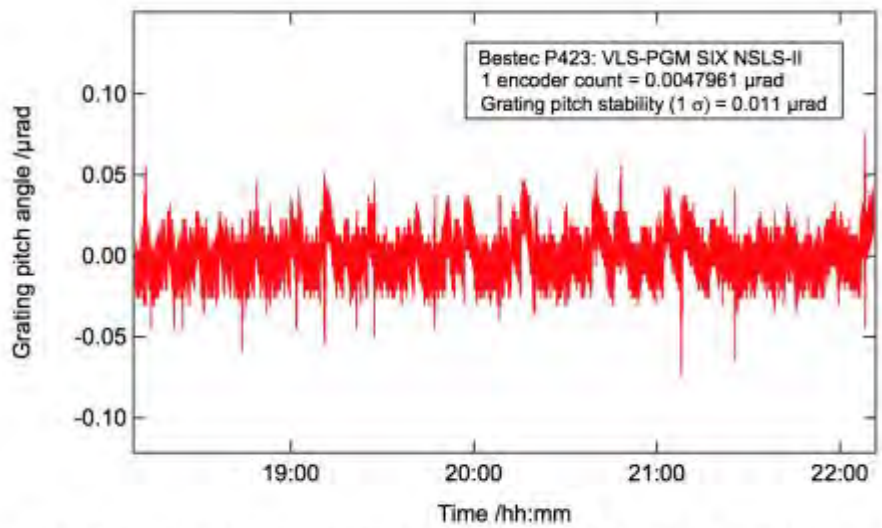

Figure 13: Long term gratings pitch angle stability. Encoder data are neither averaged nor filtered.

premirror pitch: 27 nrad 1σ

grating pitch: 11 nrad 1σ

PGM like design: Pre-mirror or post-mirror? Effect on resolution

This graph shows the effect on the resolution of a single mirror with the slope error shown. A 100 nrad premirror is what we expect for the vertical focusing mirror. 50 nrad is what we expect for a plane mirror.

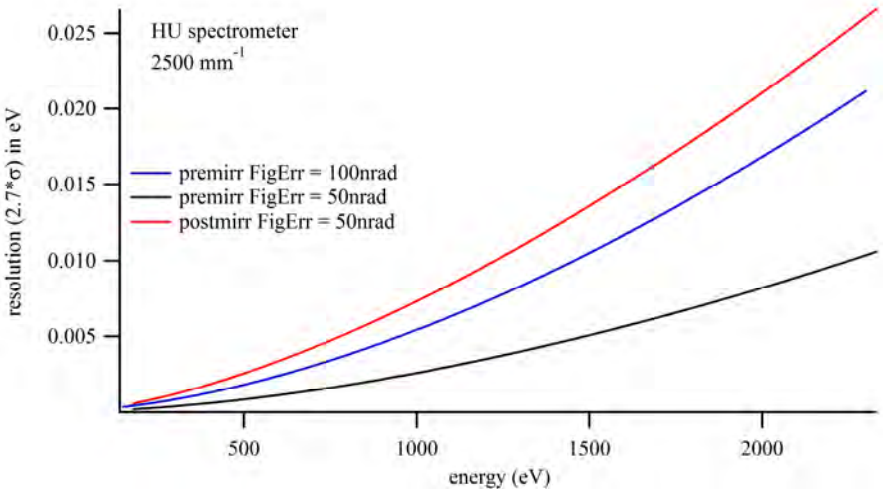

This graph shows net effect of the premirror on the resolution, including the VFM slope error, the grating slope error, and the additional plane mirror slope error, the source size, and the detector resolution.

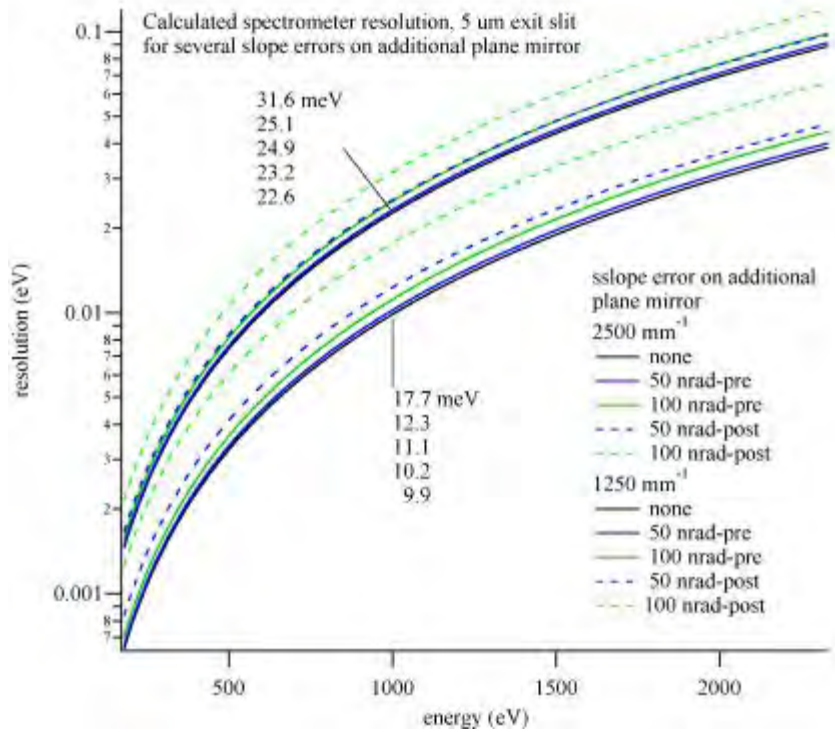

Answer: pre-mirror

Better if mirror is placed before grating for 2500 mm^{-1} grating (and keeps premirror a reasonable length)

Simulation using existing 15m long HU 2500 mm-1 optical design.

PGM like design: Pre-mirror or post-mirror?
Effect on resolution - raytracing

The analytic estimation of the resolution was checked with SHADOW for 2500 mm^{-1} grating, 1000 eV

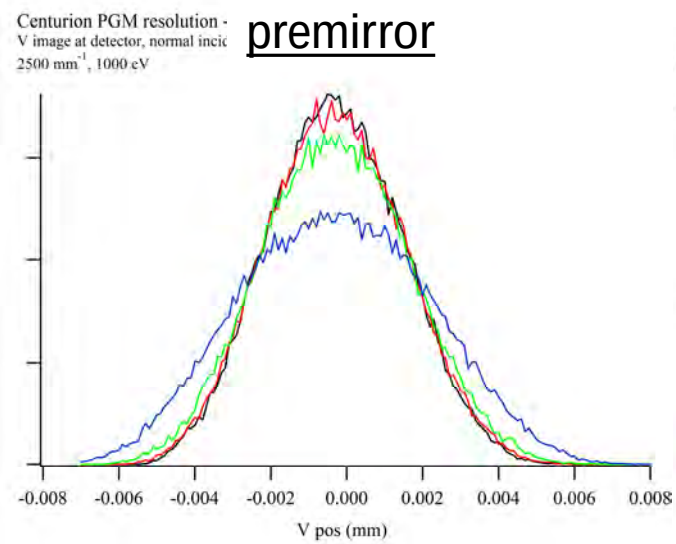

premirror slope error

se	FWHM	1σ
0 nrad	4.4 um	1.75 um
50 nrad	4.4	1.80
100 nrad	4.8	1.94
200 nrad	6.4	2.45

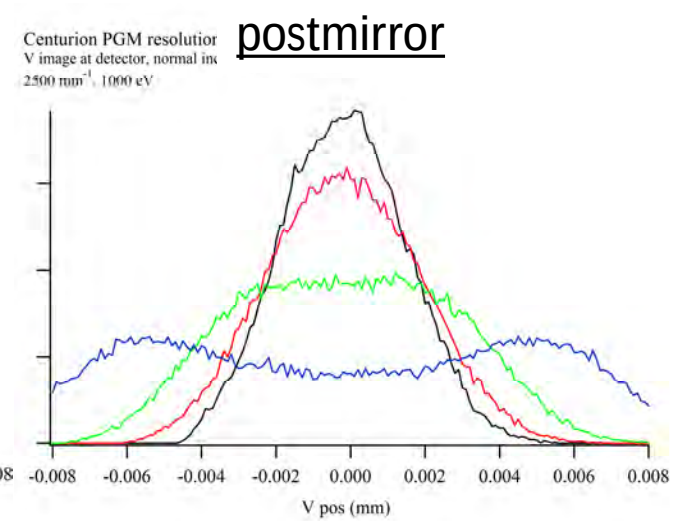

postmirror slope error

se	FWHM	1σ
0 nrad	4.1 um	1.64 um
50 nrad	5.1	2.02
100 nrad	8.6	2.87
200 nrad	~15.5	4.99

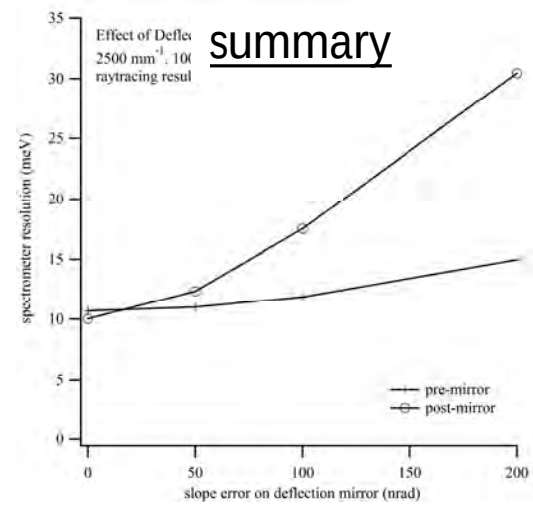

Answer: pre-mirror

Raytracing confirms that the premirror has less an effect on the resolution. Also, since the beam gets large after diffraction from the grating (working in + first order), the redirection mirror will be unreasonable large for a post mirror.

Estimation of offset required for PGM-like option

Takes into account the beam acceptance of the grating, and the length and angles on the grating. Final tweaking is done by detailed raytracing.

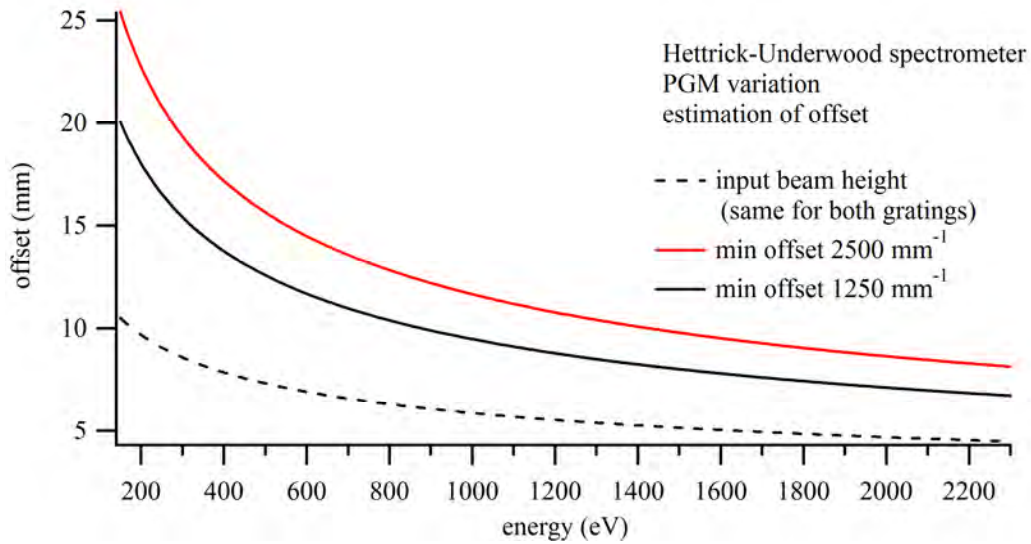

20-22 mm seems like a 'good' number. Loose a little bit of the beam below 300 eV for the 2500 mm^{-1} grating. 1250 mm^{-1} grating should have plenty of resolving power at these low energies.

Detailed raytracing shows that 20 mm is a workable offset given the grating size.

Simulated using existing 15m long HU 2500 mm-1 optical design.

PGM plane mirror angles and beam footprint

In a PGM-like design, you can choose the fixed offset angle of the exit beam. This allows you to reduce the required angle on the premirror. However, this increases the beam footprint on the premirror and the premirror length. Clearly, there is a compromise value. These plots show how the beam footprint varies for different choices of the offset angle of the output beam.

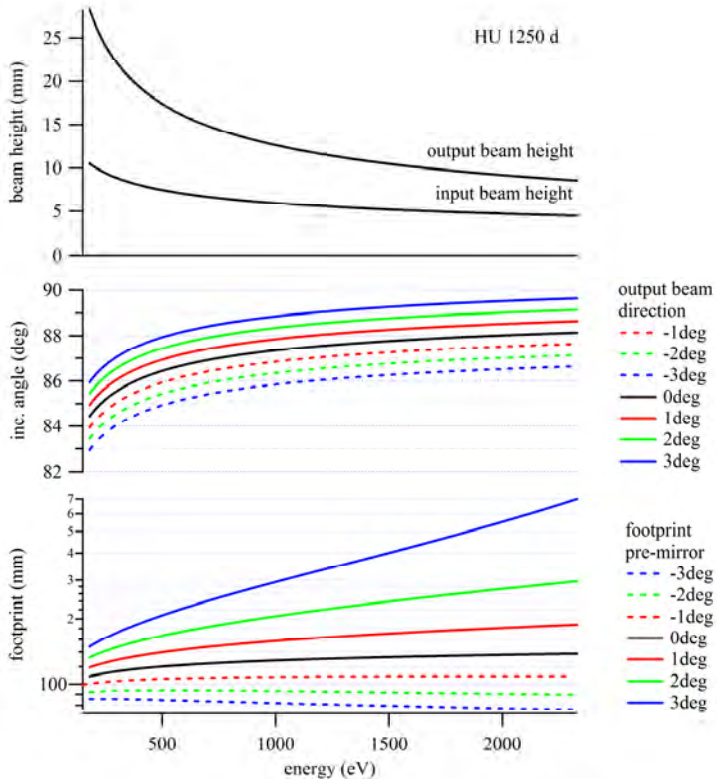

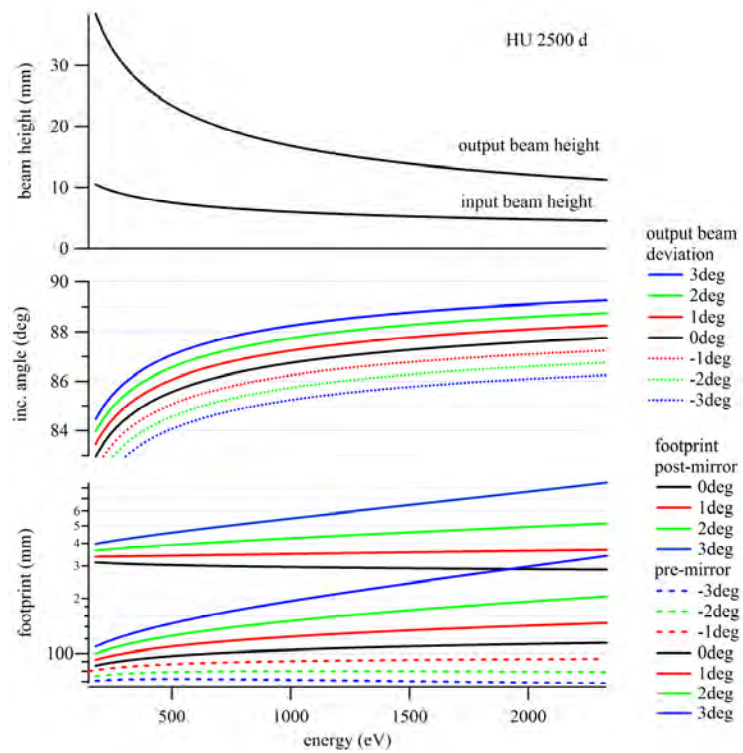

- A positive deflection of +2 deg will keep angles on the premirror reasonably grazing and keep beam footprint reasonable.
- A positive deflection of +2 deg and a post mirror has a footprint between 400 and 500 mm. For a premirror this footprint is 100 and 200 mm. The premirror length is significantly longer than the footprint.
- Therefore, a premirror is indicated.

Output beam direction is relative to parallel input and output beam
If grating is facing upwards, + deflection is upwards

Simulated using existing 15m long HU 1250/2500 mm^{-1} optical design.

Premirror reflectivity considerations

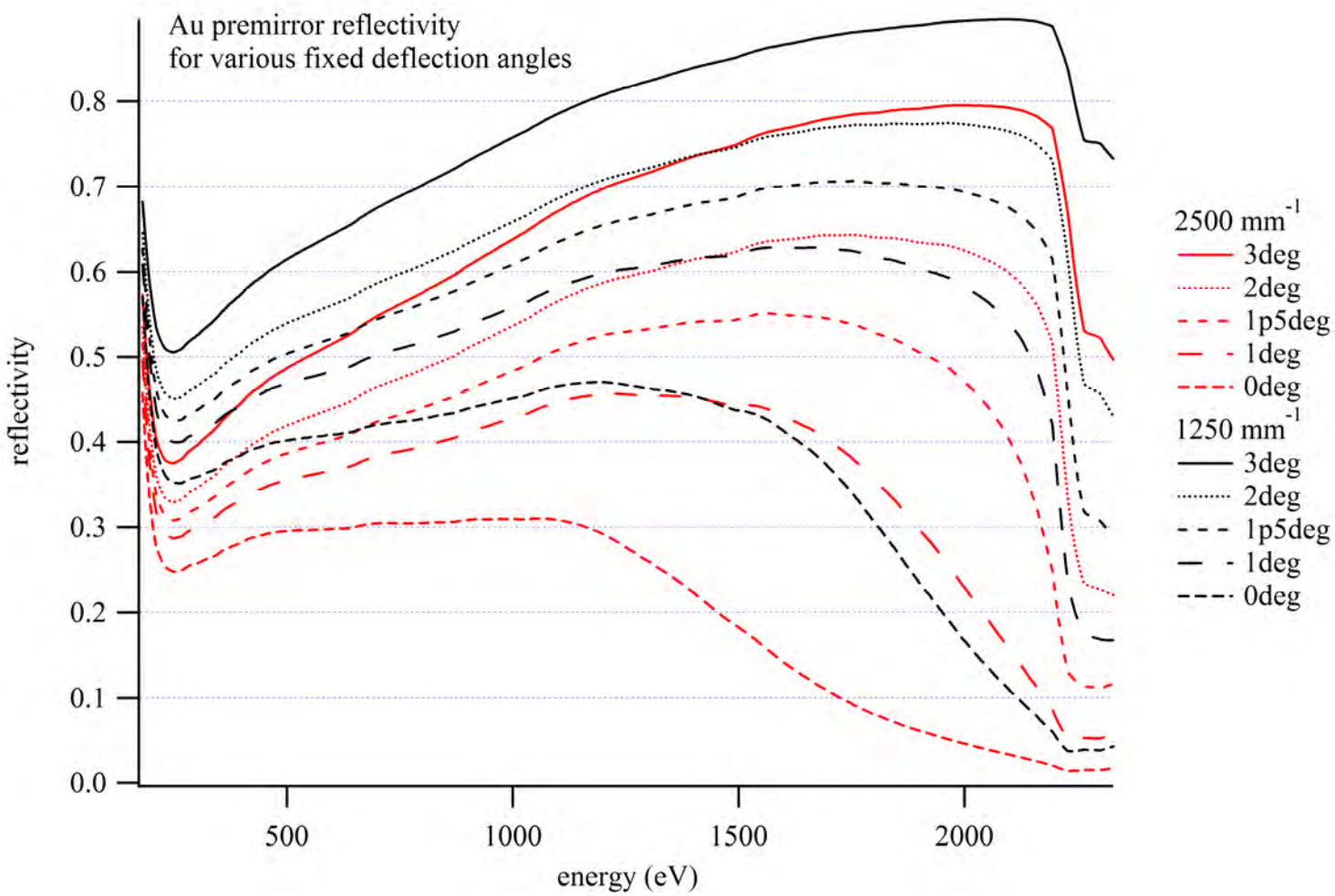

From a reflectivity standpoint, you really want to have a beam deflection of +2° if possible.

Geometry considerations I
Space for premirror

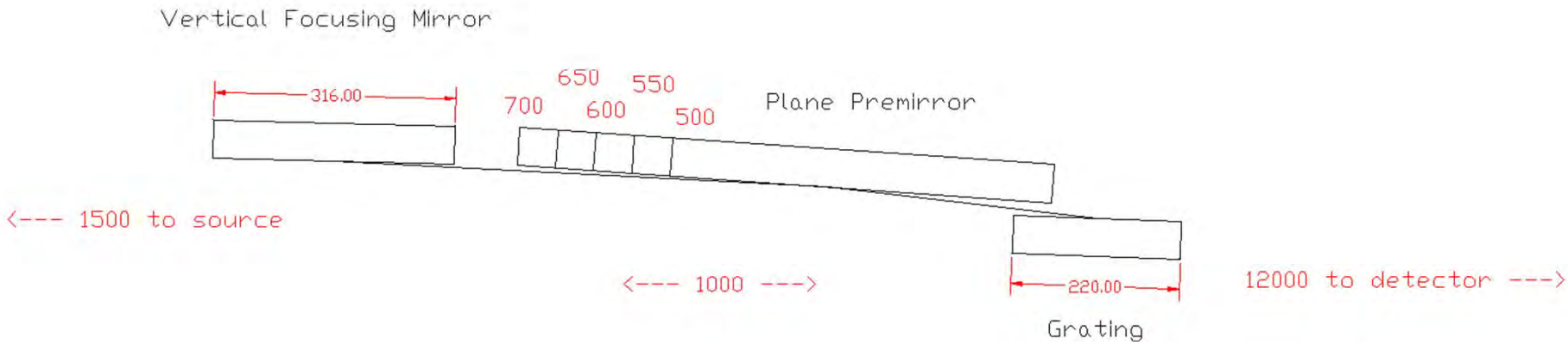

Would like to keep premirror length below 550 mm to allow enough room for mechanics, for reasonable stiffness of the substrate, and longitudinal motion of the mirrors.

Geometry considerations II

Beam height at the detector for various deflection angles relative to grating

Takes into account the monochromator PGM offset, the VFM deflection, and the PGM offset and fixed deflection angle.

	PGM deflection	VFM deflection	Net relative to horizontal	Beam height at detector (mm)
Grating up	1°	-3°	-2°	928
	1.5°	-3°	-1.5°	1033
	2°	-3°	-1°	1137
	3°	-3°	0°	1347
Grating down	-1°	3°	2°	1911
	-1.5°	3°	1.5°	1806
	-2°	3°	1°	1701
	-3°	3°	0°	1492

Approx. height based on 20 mm PGM offset
Exact height depends on final mirror positions

Either up or down grating is acceptable from a consideration of the beam height at the detector.

Chosen Design Parameters

Grating deflection: upwards (deflection the same as show

PGM-like mechanism:

beam offset: 20 mm

fixed output angular deviation: +2 deg relative to parallel output, -1 deg relative to horizontal

Reimer-Torge premirror rotation: 10.0856 mm down from grating rotation axis, 0.00235 mm closer to source, and R=20.0856 mm

Beam height at detector: ~1137 mm relative to nominal floor height (exact value depends on exact distances chosen for VFM and grating)

Premirror length:

optical clear length = 525 mm

physical length = 545 mm

Premirror energy range (unblocked beam):

2500 mm-1: 250 – 2300 eV

1250 mm-1: 180 – 1500 eV

Premirror reflectivity: shown in plot

Resolution estimation: shown in plot

Note: premirror can be made shorter with smaller fixed angular offset of 1.5 degrees, and slightly larger offset (~21 mm) for a length of ~ 450 mm optical / 470 mm total at the cost of reflectivity.

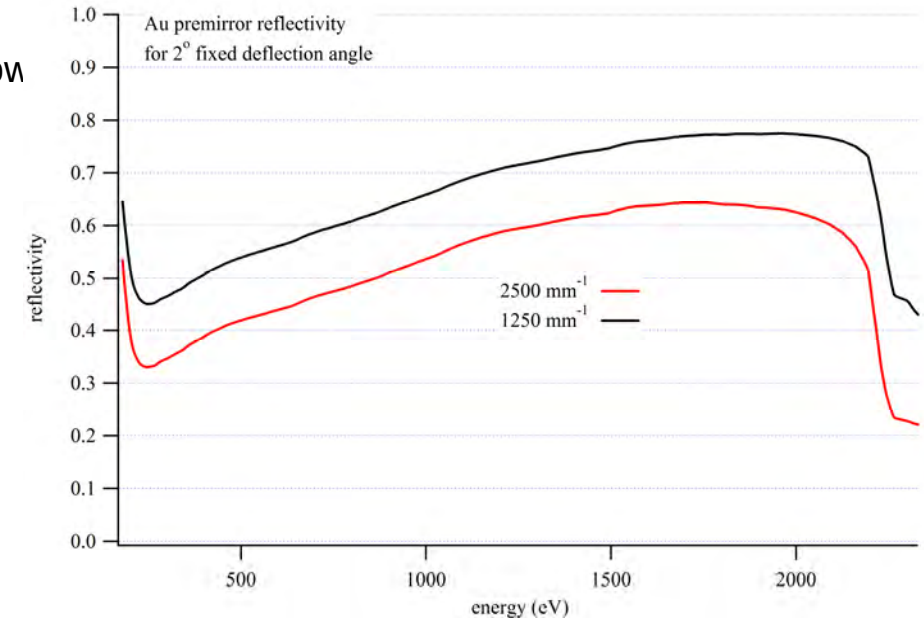

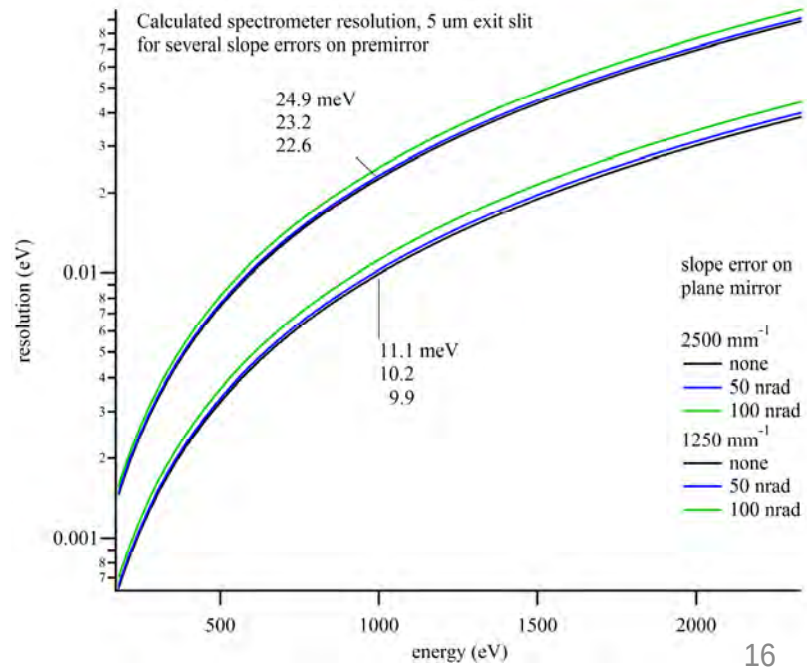

Check of tuning across energy range:

2500 mm^{-1}

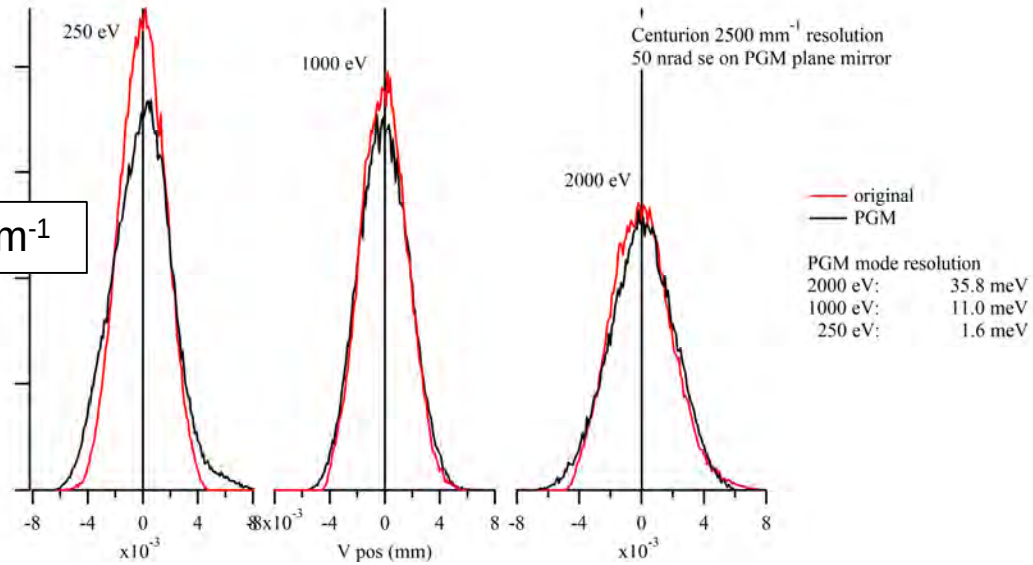

1250 mm^{-1}

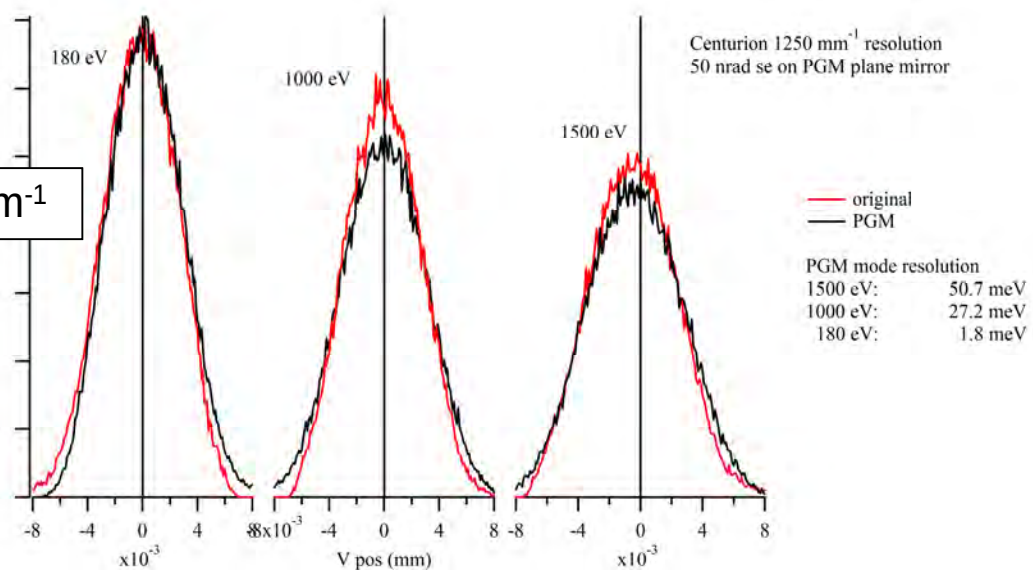

With VLS parameters manually optimized for the PGM like configuration, it is possible to zero defocus and coma over the entire energy range by changing the included angle and r_2. This has been verified via SHADOW.

More subtle optical effects of a premirror

Imaging with premirror

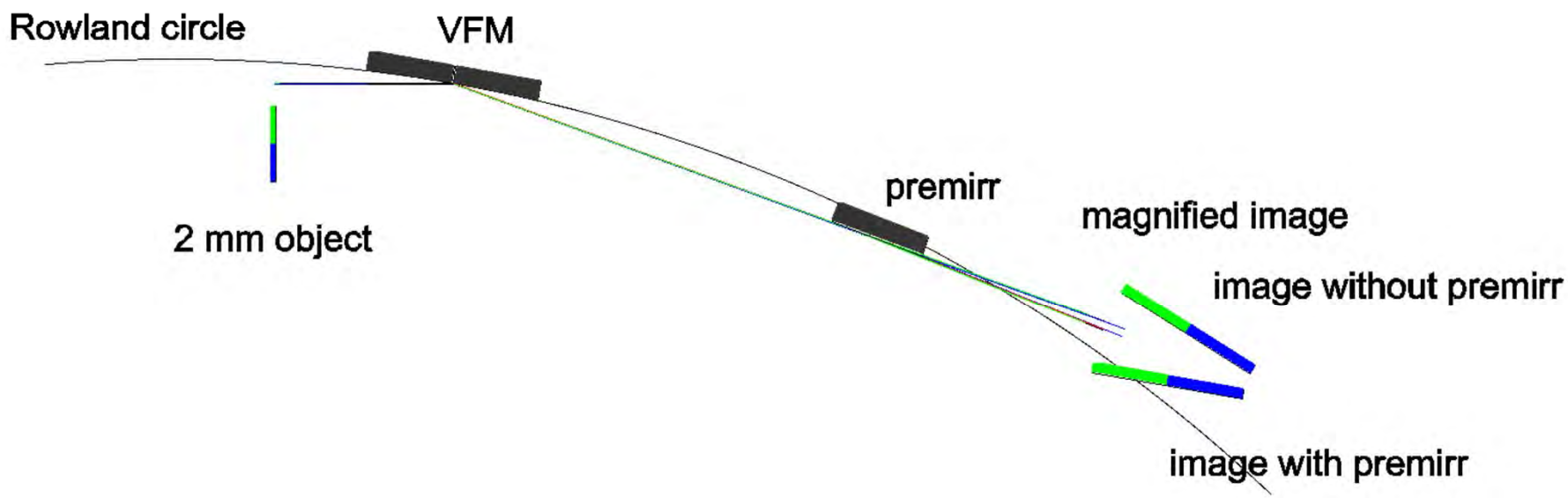

If one looks at the focal properties of a high magnification sphere (1:4 in this example) and you trace the rays for a very small aperture to limit aberrations, you find (as expected) that the focal plane is highly tilted, but 'top' stays on top; if a premirror is inserted, the image is flipped. This image is the virtual image for the spectrometer grating.

Aberrations

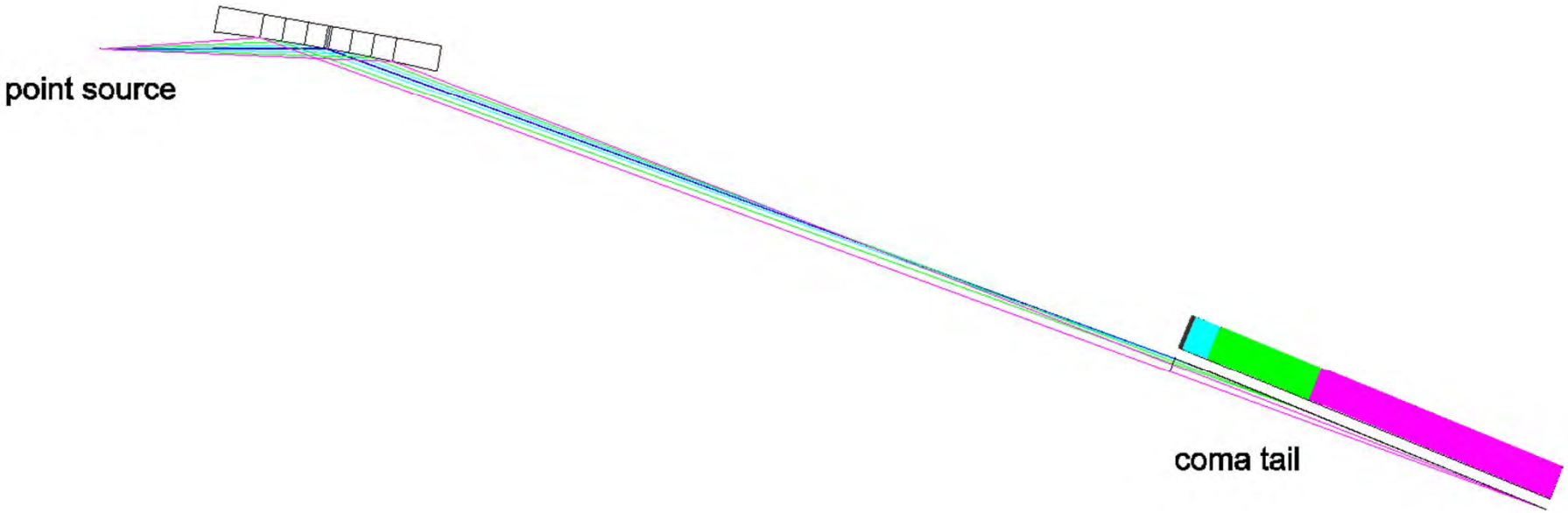

If one looks at the aberration properties of a high magnification sphere (1:4 in this example) and you trace the rays from a point source for succesively larger apertures, you find (as expected) a huge coma tail. The beams for the various apertures come to focus on a line similar to the highly tilted focal plane.

In analogy with the previous slide, the insertion of a premirror will ‘flip’ the aberrations as well.

Optical path differences

The optical path is not strictly constant for a PGM like mechanism

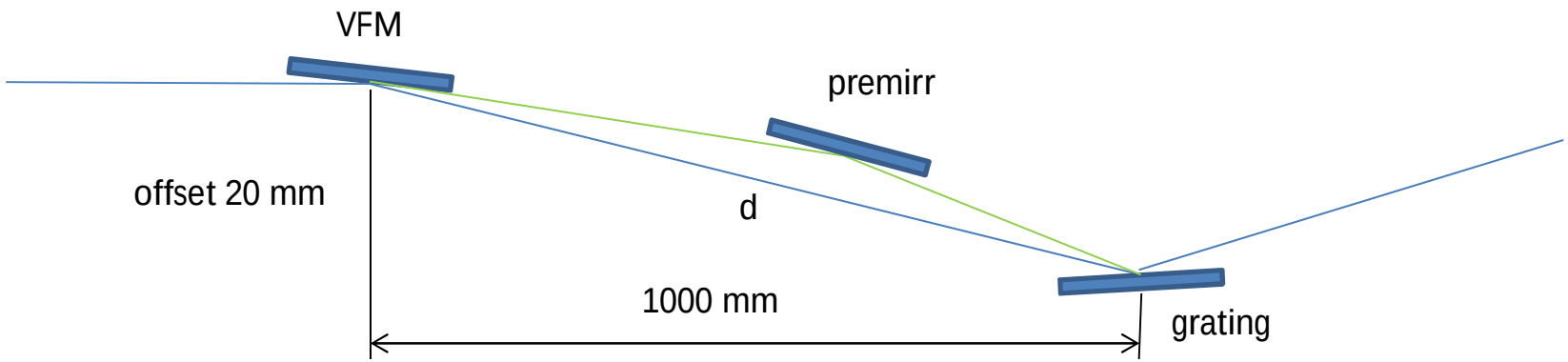

d without premirror = 1000.200 mm

d with premirror, 2500 mm^{-1} grating
2300 eV = 1000.4434
250 eV = 1001.772
d with premirror, 1250 mm^{-1} grating
1500 eV = 1000.4335
180 eV = 1001.6036

The optical path length from the VFM to the grating varies over a range of 1.338 mm. This is analogous to moving the grating virtual source by the same amount, along the optical axis, and is comparable to the depth of focus of the spectrometer. Its effects will be minimal.

PGM premirror design: raytracing check

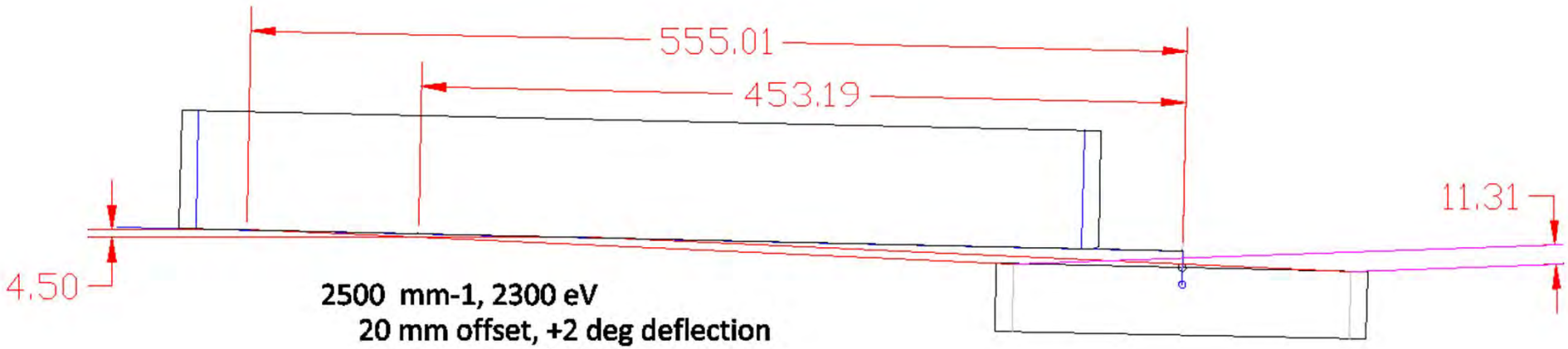

2500 mm-1, 2300 eV
20 mm offset, +2 deg deflection
theta = 88.73 [1.27]
alpha = 88.712
beta = -86.7581[3.2419]
input beam height = 4.4956 mm
output beam height = 11.3 mm

PGM premirror design: raytracing check

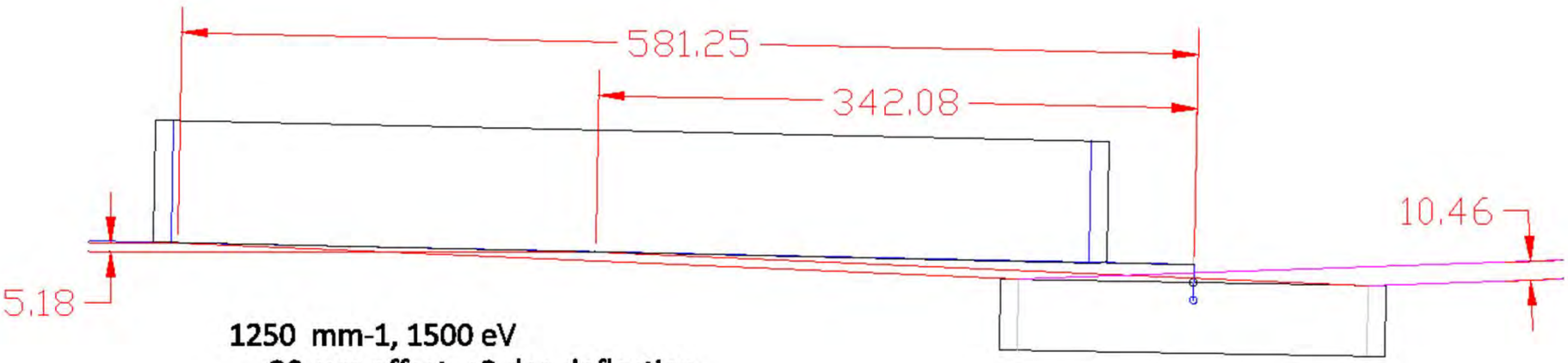

1250 mm-1, 1500 eV
20 mm offset, +2 deg deflection
theta = 88.7583[1.24175]
alpha = 88.515
beta = -87.0015[2.9985]
input beam height = 5.183 mm
output beam height = mm

PGM premirror design: raytracing check

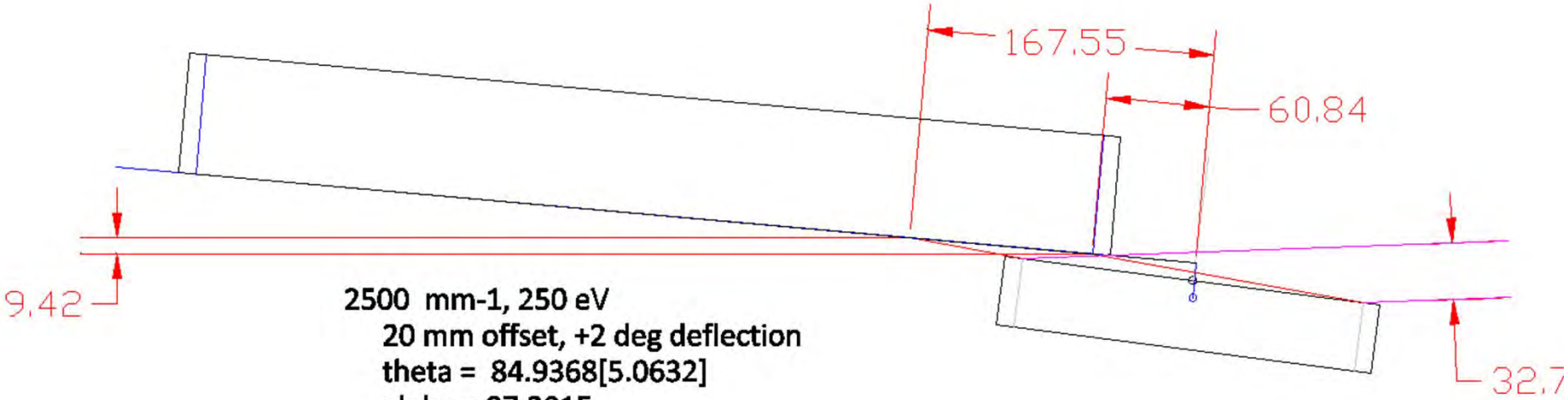

2500 mm-1, 250 eV
20 mm offset, +2 deg deflection
theta = 84.9368[5.0632]
alpha = 87.3015
beta = -80.5722[9.4278]
input beam height = 9.418 mm
output beam height = 32.8 mm

PGM premirror design: raytracing check

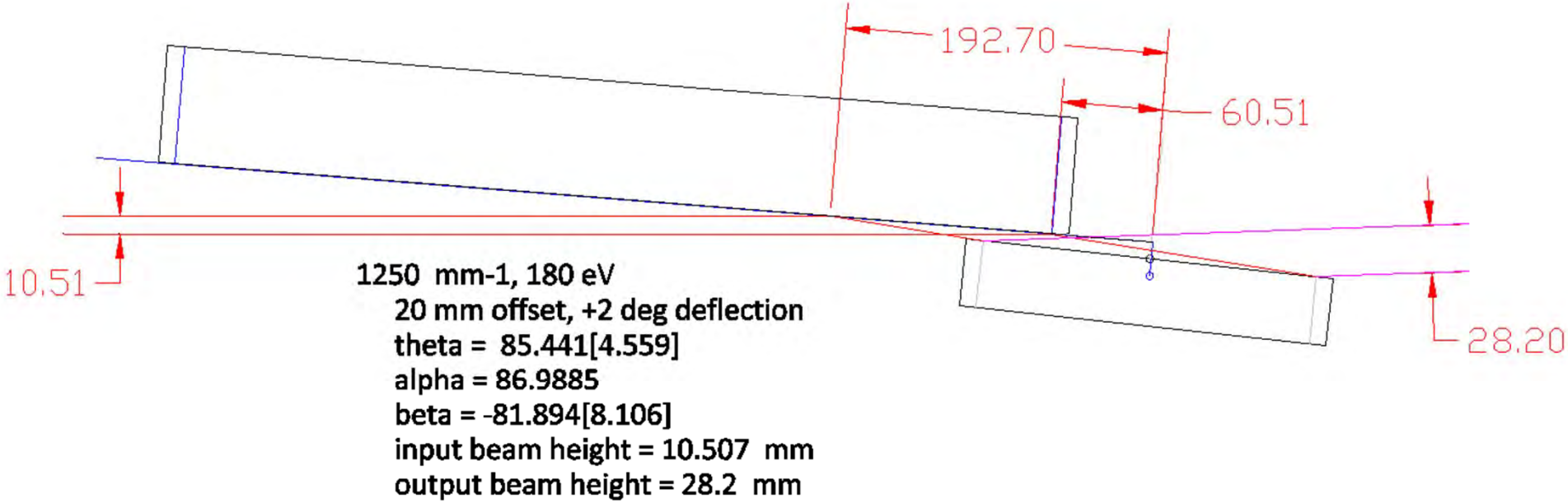

Premirror dimensions

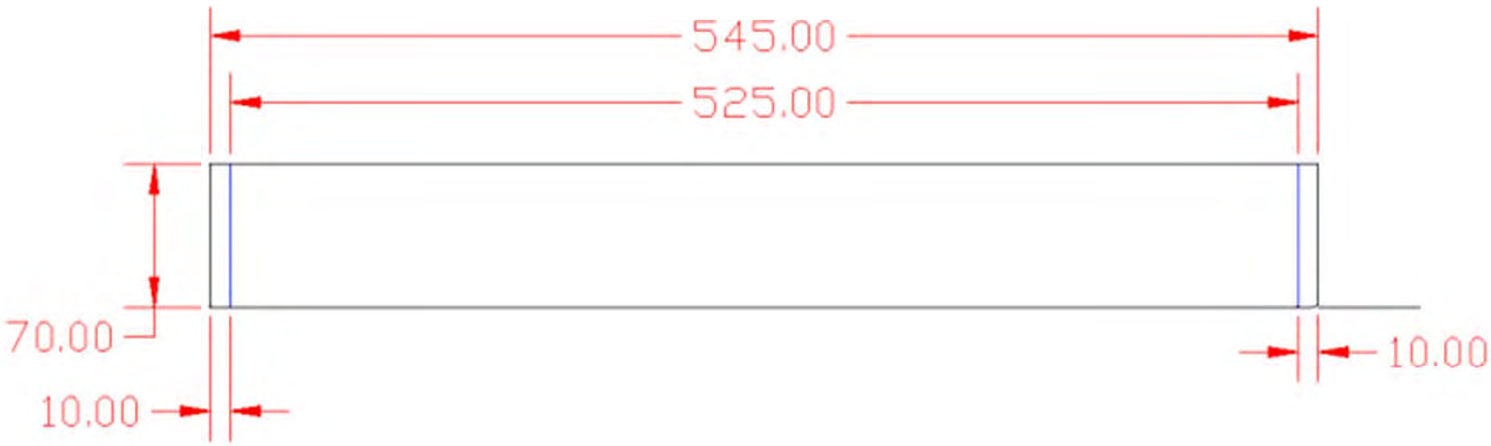

Approximate dimensions of proposed optical scheme

(Dimensions in mm)

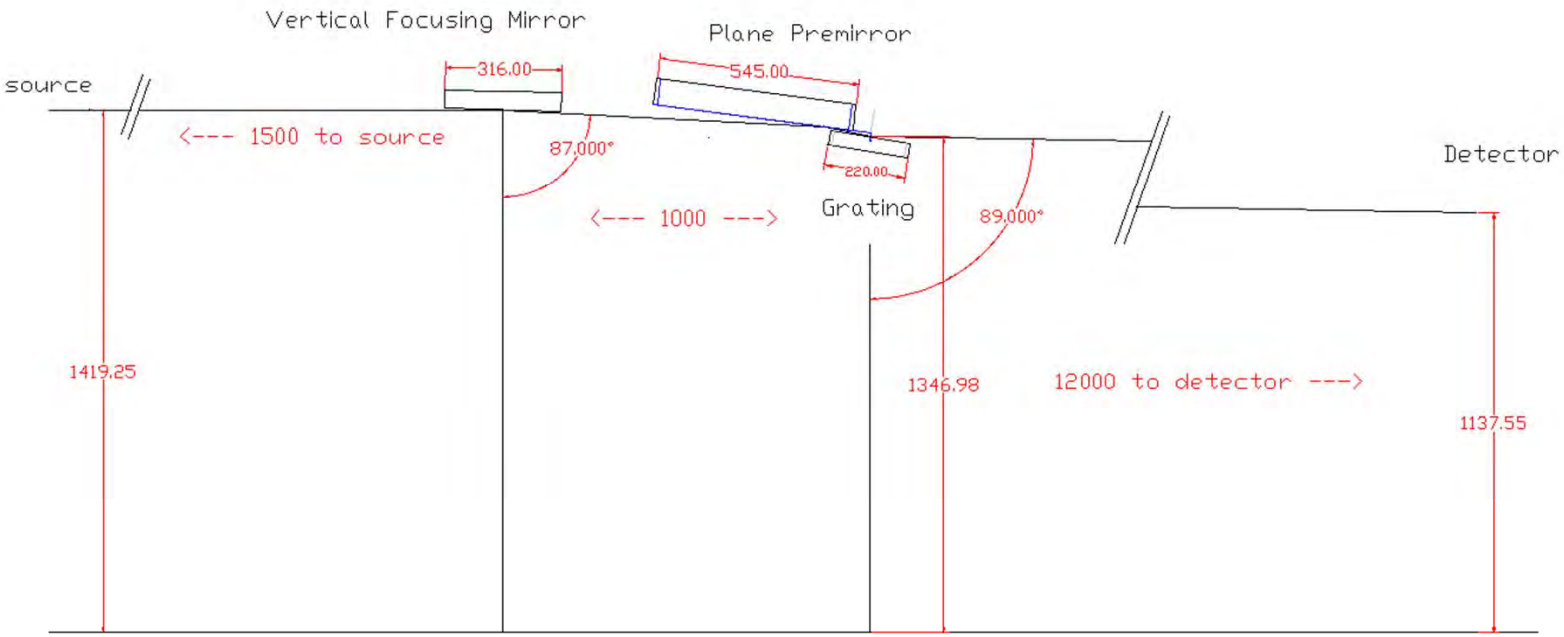

Note: these dimensions are approximate. It is likely we will shift the entire optics and detector set as a unit 100-200 mm further away from the source to give us more room for the triple rotating flange.

VFM stability requirements

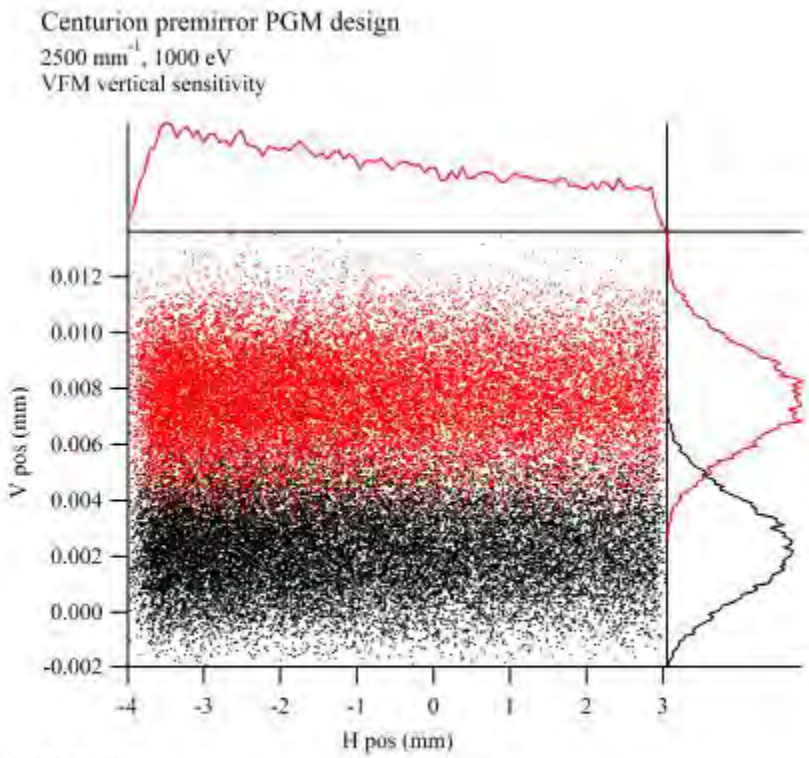

V shift of 2 um
original pos = 2.39 um (1.59 um 1σ)
shifted pos = 7.74 um
inv. linear dispersion = -2.26 meV/um
dV/dy_{min} = 2.68 um/um = 6.06 meV/um
height stability = 0.17 um

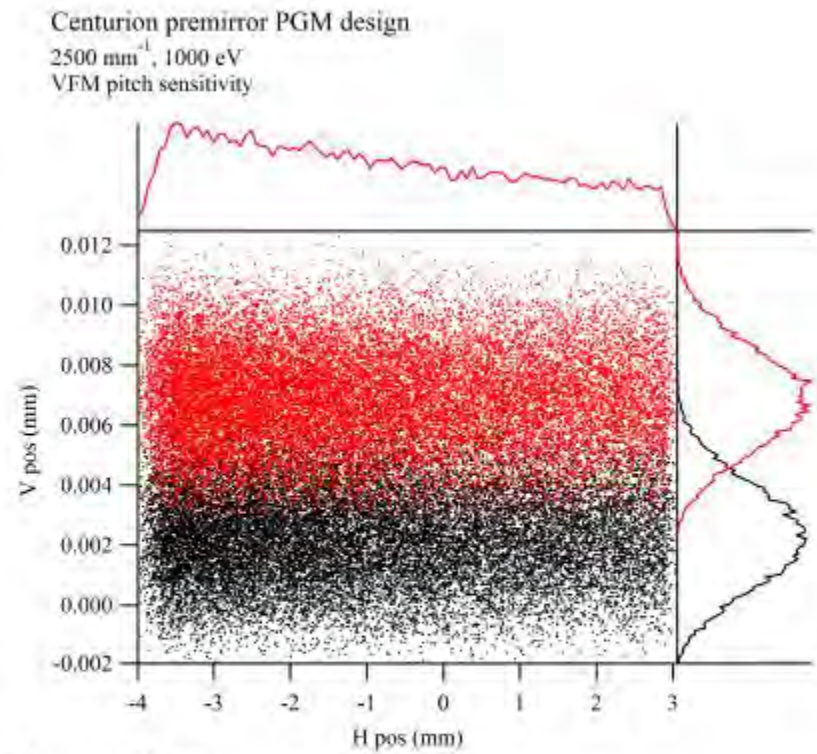

pitch change of 0.5 um
original pos = 2.39 um (1.59 um 1σ)
shifted pos = 6.94 um (1.60 um 1σ)
inv. linear dispersion = -2.26 meV/um
$dV/dpitch_{min}$ = 9.1 um/urad = 20.6 meV/urad
pitch stability = 0.048 urad

Premirror stability requirements

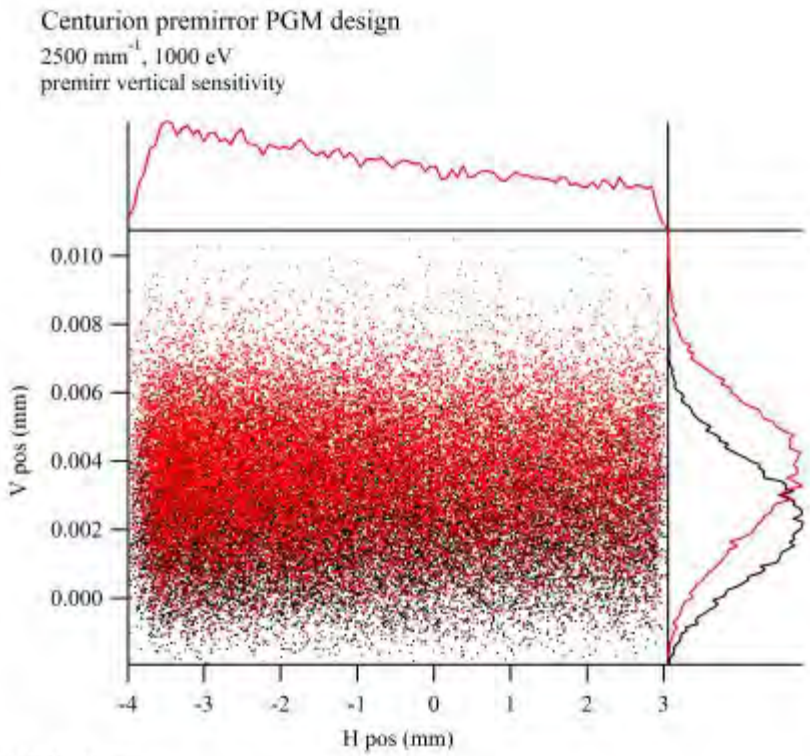

V shift of 2 um
original pos = 2.39 um (1.59 um 1σ)
shifted pos = 3.79 um (1.85 um 1σ)
inv. linear dispersion = -2.26 meV/um
dV/dy_{mirr} =1.4 um/um = 3.16 meV/um
height stability = 0.32 um

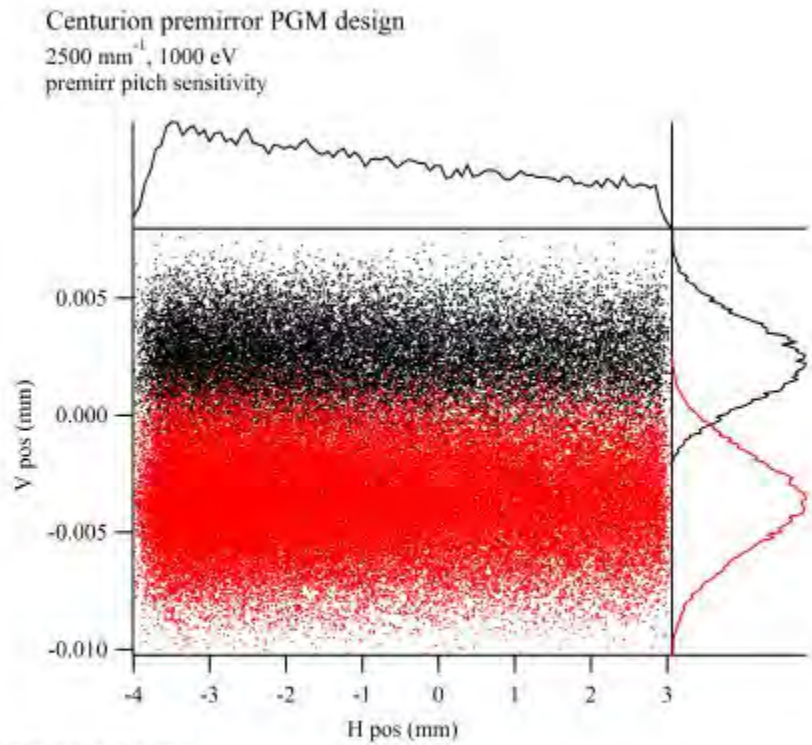

pitch shift of 0.5 urad
original pos = 2.39 um (1.59 um 1σ)
shifted pos = -3.67 um (2.01 um 1σ)
inv. linear dispersion = -2.26 meV/um
$dV/dpitch_{mirr}$ =12.1 meV/urad = 27.4 meV/urad
pitch stability = 0.37 nrad

Sample manipulation and CCD status

Valentina Bisogni

SIX Endstation Review

May 5, 2015

U.S. DEPARTMENT OF ENERGY

BROOKHAVEN NATIONAL LABORATORY
BROOKHAVEN SCIENCE ASSOCIATES

Sample manipulation and CCD status

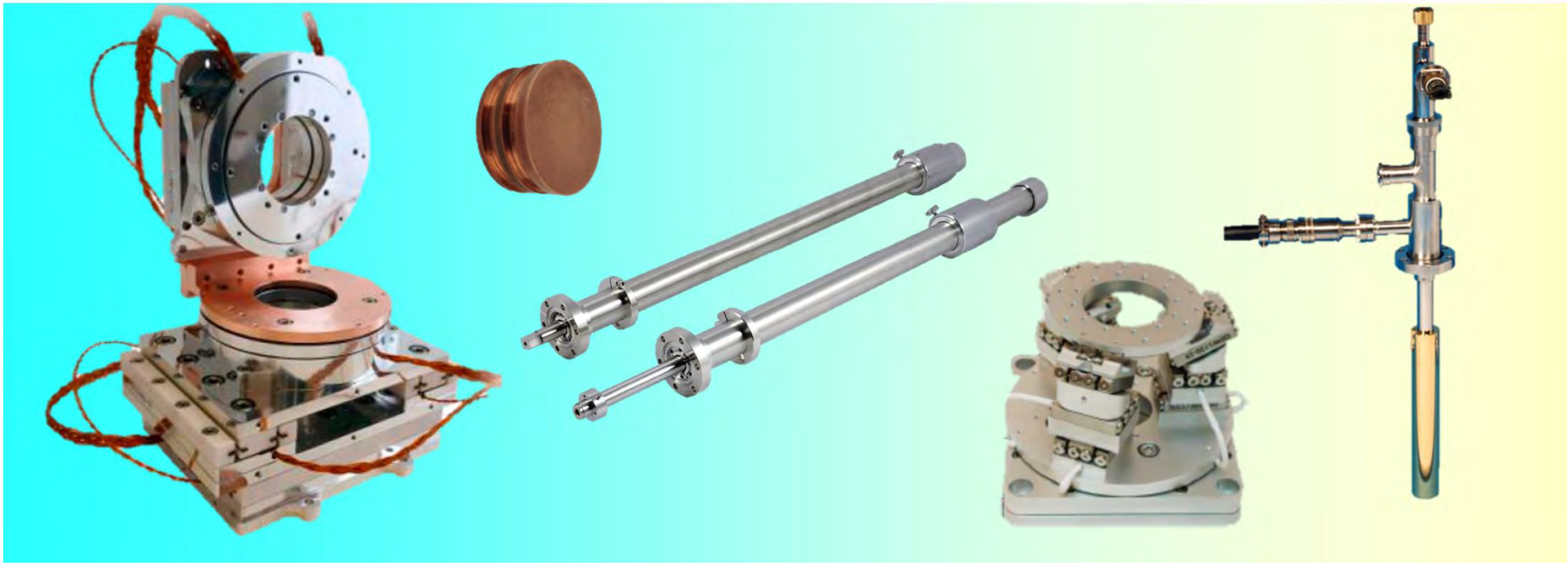

Part 1 – Sample Motion System (SMS), Cryostat and Sample Transfer Unit

Requirements for SIX Sample Motion System

- **Positioning: 6 DOFs → X, Y, Z, θ, ϕ, χ** (all motorized)
- **Sphere of confusion: 5 µm**
- **Stability ~ 1 µm**
- **Amplification factor** of background vibration of max a **factor of 3**

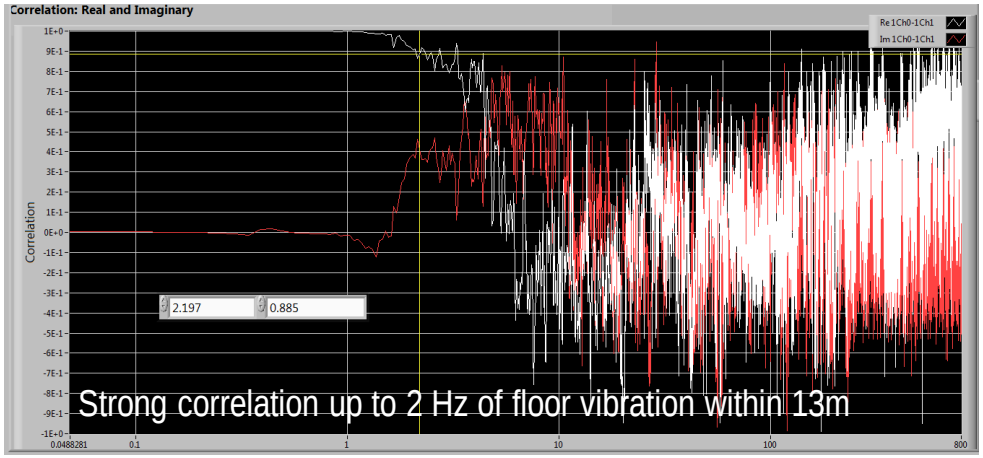

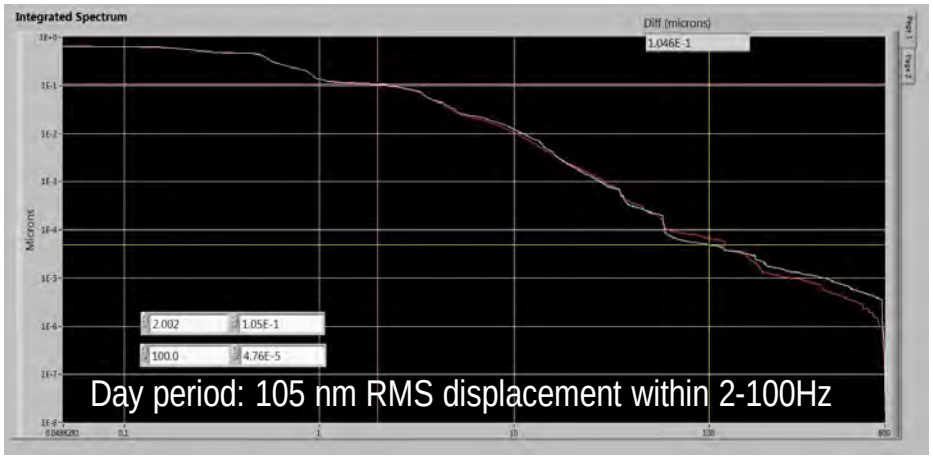

- **Ultra High vacuum compatibility** ~ 10^{-9} mbar
- **Temperature**: reaching a minimum temperature of **< 20 K**

SIX SMS: kinematic piezo approach

- High stability of the linear piezo-positioners < 200 nm
- High resolution < 1 nm and repeatability < 200 nm (close-loop operation)
- Sphere of confusion: 2 µm
- Ultra High Vacuum compatibility

SIX SMS: kinematic piezo from SmarAct

- Award of SIX SMS to SmarAct imminent (quotation received on 4/30, under evaluation. Lead time 26 weeks)

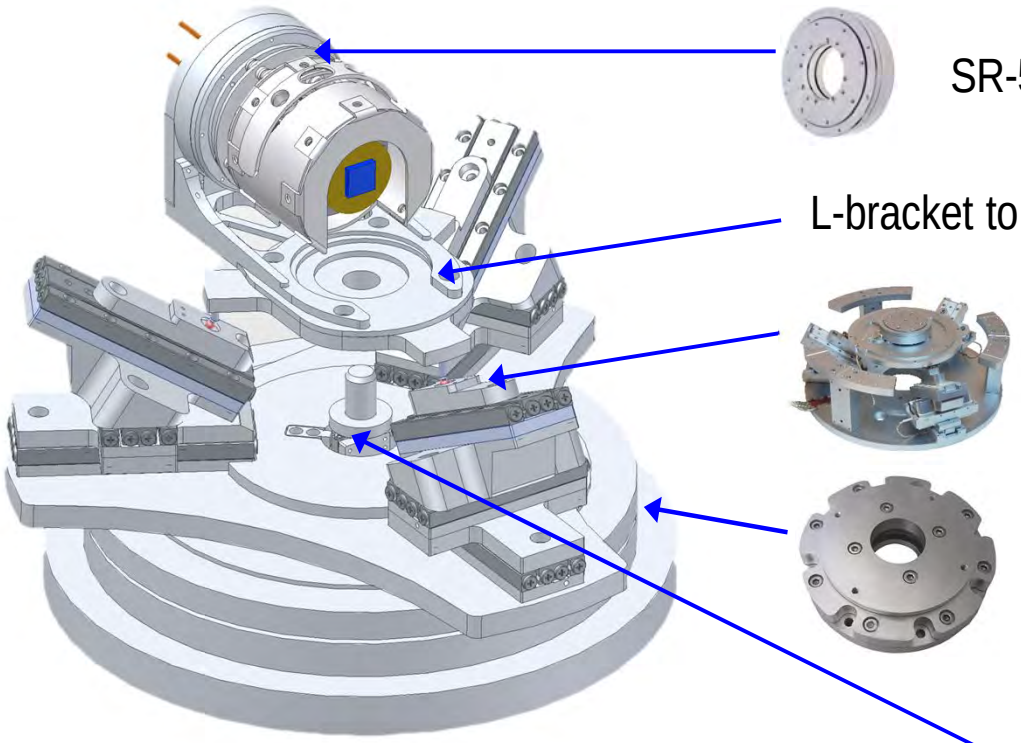

SR-5714 Rotary stage for ϕ DOF

L-bracket to mount the ϕ stage and sample holder

Smarpod 225.75 for X,Y,Z, χ DOFs

SR-15030 Rotary stage for θ DOF (customized extra-large 150 mm bearing ID for stability)

Locking system

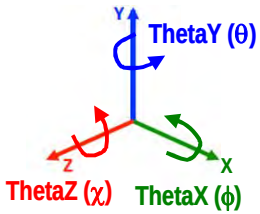

Travel ranges achieved at the sample location

DOF	Range
Z	41.5 mm
X	41.5 mm
Y	24 mm

DOF	Range
ThetaZ	±14°
ThetaX	±15.5°
ThetaY	±25.5°

BROOKHAVEN NATIONAL LABORATORY
BROOKHAVEN SCIENCE ASSOCIATES

SIX SMS: kinematic piezo from SmarAct

Risks and Mitigation Strategy:

- Maximum load tolerated by the last piezo-stage in the stack (ϕ rotary stage) is ≤ 750 g:
  1 - Sample holder weights around 250 g
  2 - Load exerted by Cu-braids (shown later) should be then within 500 g

- Torque exerted by Cu-braids should be minimized

→ Dedicated tests are planned. Testing material is being procured right now (more details in Sl. 9)

- Care should be paid during sample transfer operation:

→ Locking mechanism added to the SmarPod to reduce the risk of extra-load
→ Automatize the transfer procedure

SIX SMS: sample holder concept

- **Sample holder** concept developed by Andrew Walter (ESM)

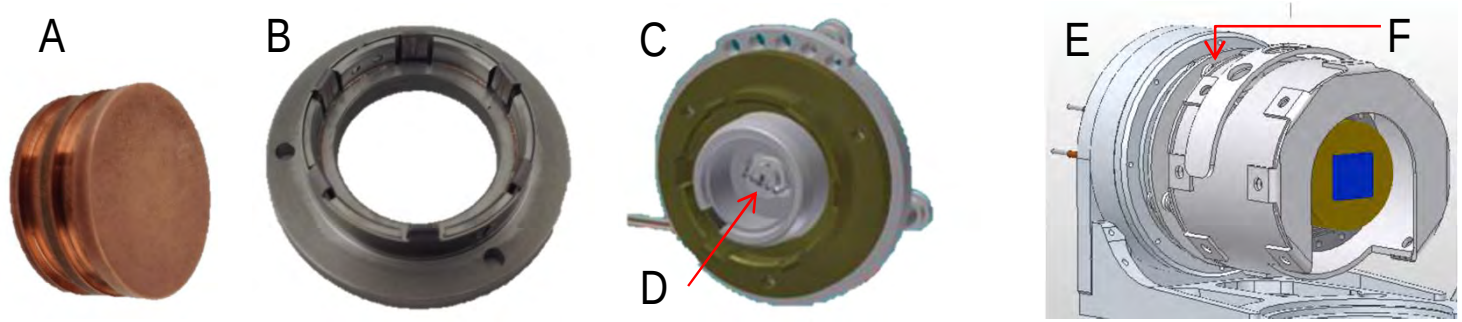

A – Cu-sample puck of 1'' diameter can accommodate more than 1 sample

B – Measurement dock based on Push-on/Pull-off Mo leaf (commercial from KJLesker)

C – Cu-support as connection point with the braids and in thermal contact with the sample

D – Heater to control the temperature

E – Cryo-shielding (current ESM design need to be adapted to the SIX need to allow for grazing incidence measurements)

F – Vespel® plate to thermally decouple the sample holder from the piezo-stage

SIX SMS: cooling concept A

Configuration A – ultra high stability:

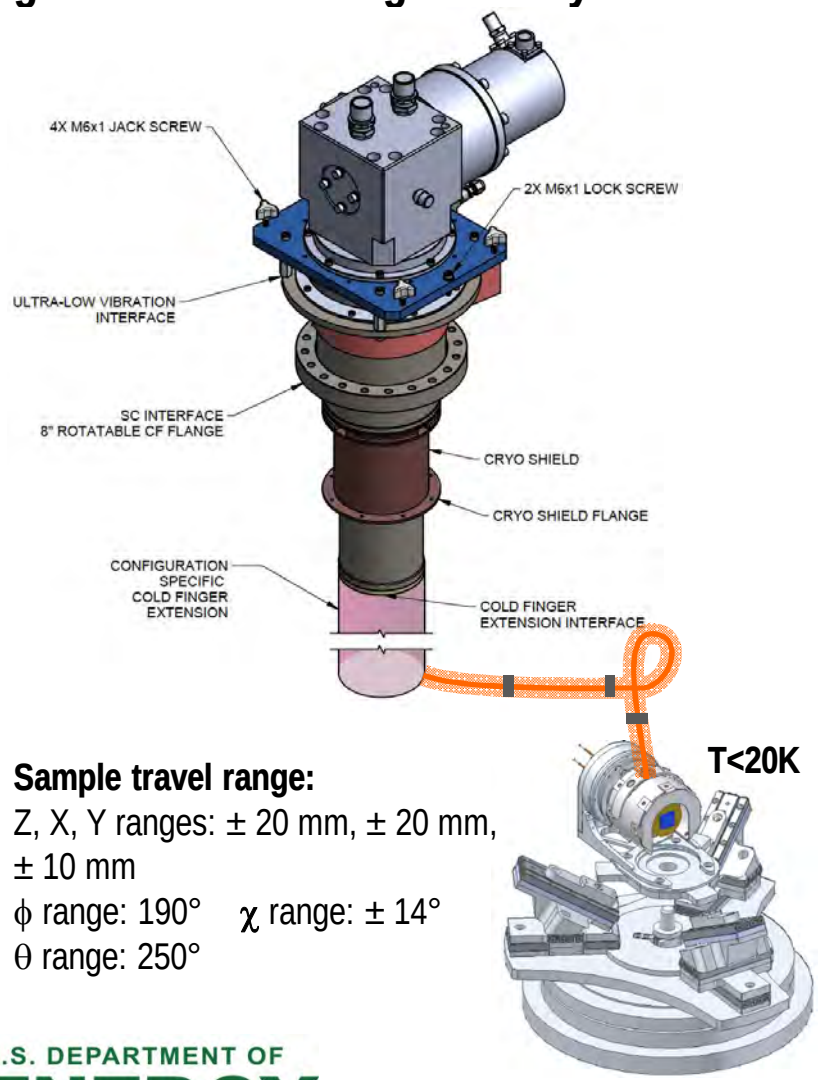

Sample travel range:
Z, X, Y ranges: ± 20 mm, ± 20 mm, ± 10 mm
ϕ range: 190° χ range: ± 14°
θ range: 250°

- **Ultra-low vibrations He (gas) - cryostat with 1W@4.2 K**
- UHV compatible
- Pulse-tube **close-cycle** cryocooler with ultra-low vibration interface
- Vibration level: 3 μm at the cold finger, which is decoupled from the sample through Cu-braids.

Quotation received from ColdEdge. To be purchased after sample chamber. Lead time 14 weeks.

SIX SMS: cooling concept A

Configuration A – ultra high stability:

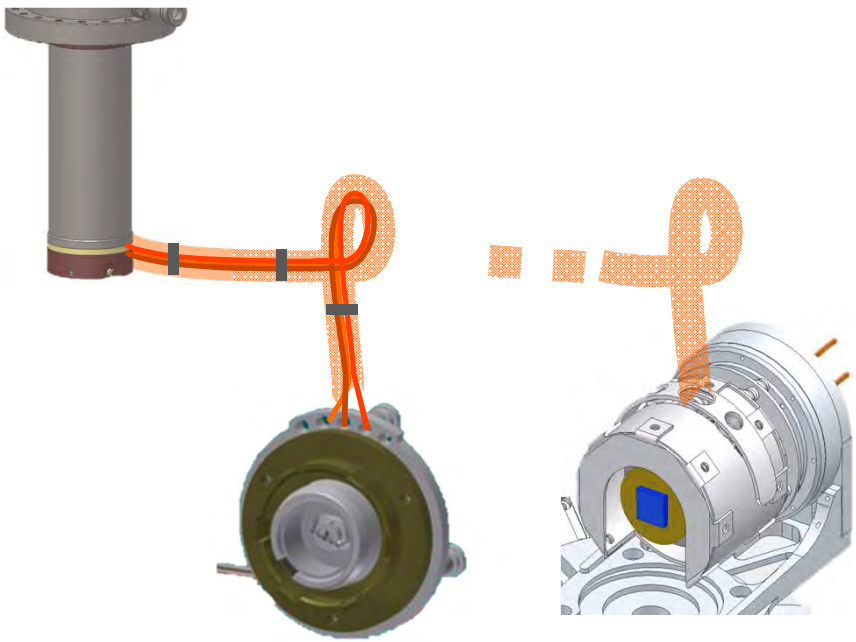

INTERNAL BRAIDS CONNECTION

EXTERNAL BRAID CONNECTION

- Cu-braids design represents a challenge for T<20K
- Internal ultra-flexible Cu-braids
- External braid shielding acting as a thermal screen and to cool down the sample shielding
- Vespel® discs to isolate internal from external braids

* ColdEdge is looking for suitable braid material for SIX and ESM configuration. Test-measurement will be done at BNL to study the most suitable braid configuration satisfying both mechanical and thermal requirements (material being purchased)*.

SIX SMS: cooling concept B

Configuration B – low temperature:

θ stage

+

Z stage

+

X,Y stage

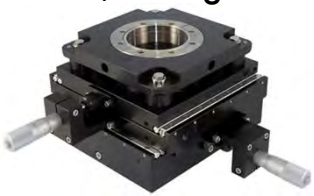

- **Flow liquid He-cryostat with 1W@4.2 K**
- UHV compatible
- Sample directly attached to the cold finger rod
- Low-temperature experiments ~ 10 K feasible

- Backup configuration in case SMS needs maintenance

- Vibration level at the sample higher than Conf. A
- X, Y, Z, θ stages required to manipulate the sample

Quotation already received from ColdEdge and McAllister/Thermionics for the stages. To be purchased right after sample chamber. Lead time 10-14 weeks.

SIX SMS: sample transfer unit

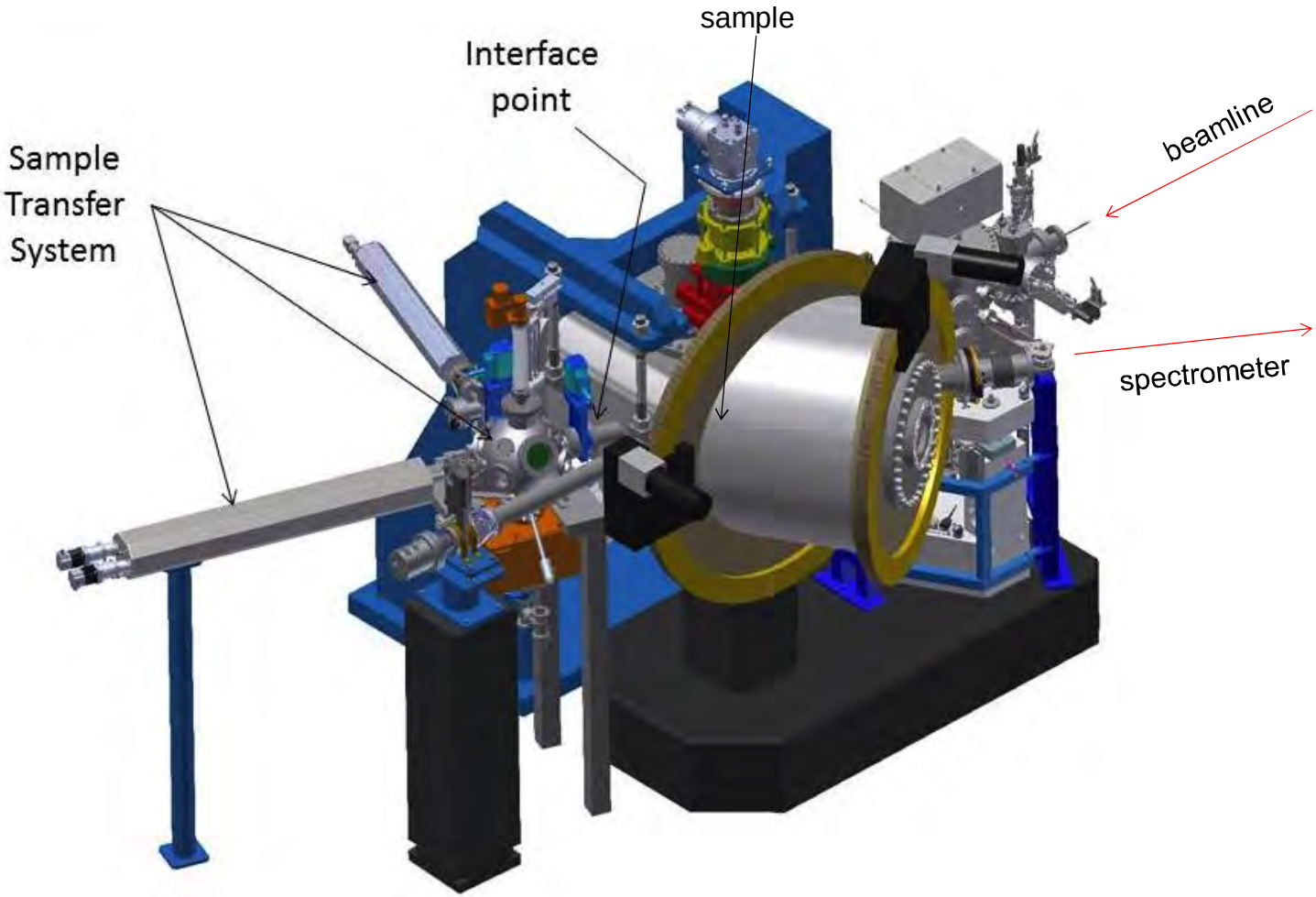

SIX SMS: sample transfer unit

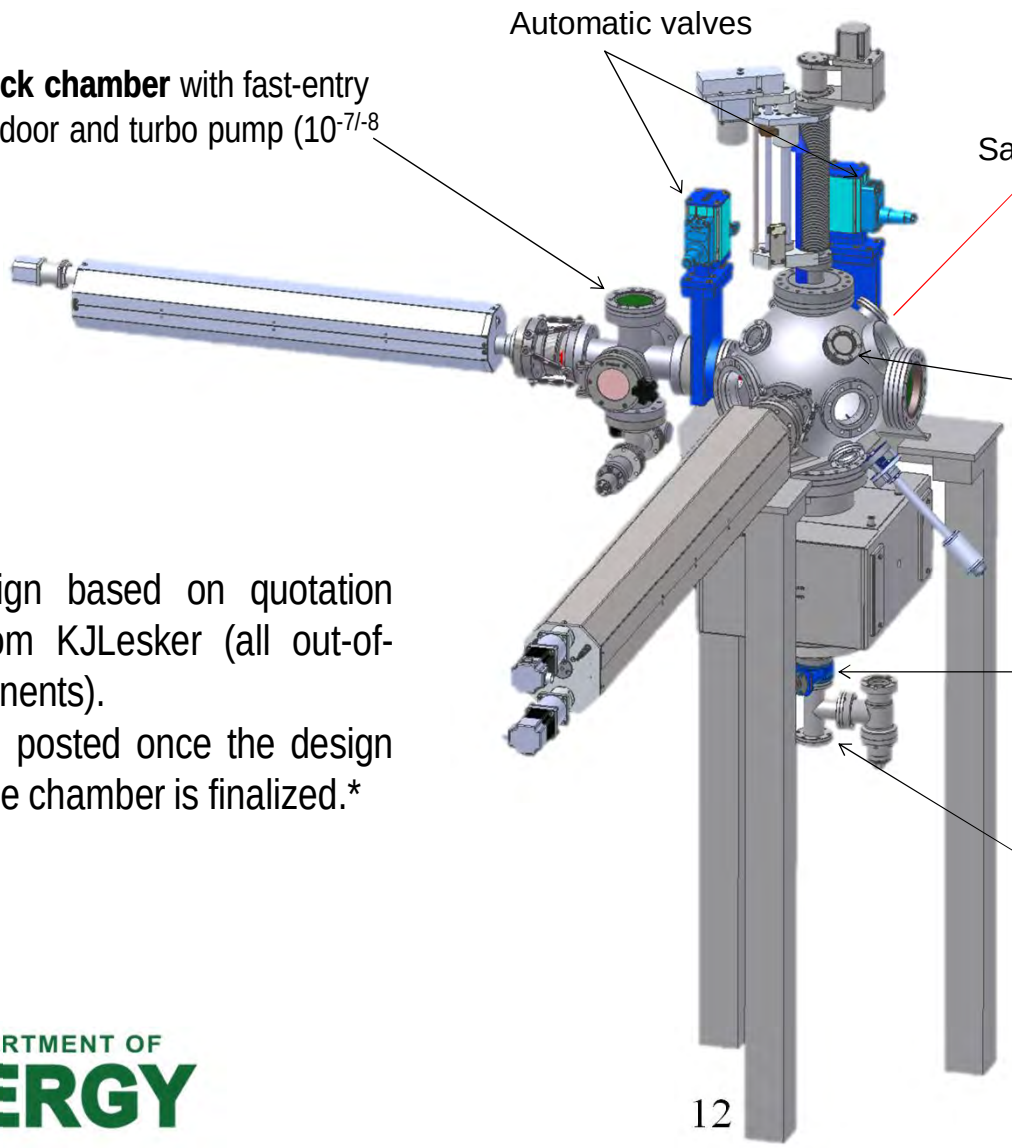

* BNL design based on quotation received from KJLesker (all out-of-shelf components).
RFQ will be posted once the design of the sample chamber is finalized.*

SIX SMS: sample transfer concept

- **Sample transfer** concept developed by Andrew Walter (ESM)

B – Multi-sample-dock load-lock transfer arm (KJL motorized linear power probe)

D – Garage with 5x3 sample docks available for temporary parking or long term storage, mounted on motorized linear and rotary motions.

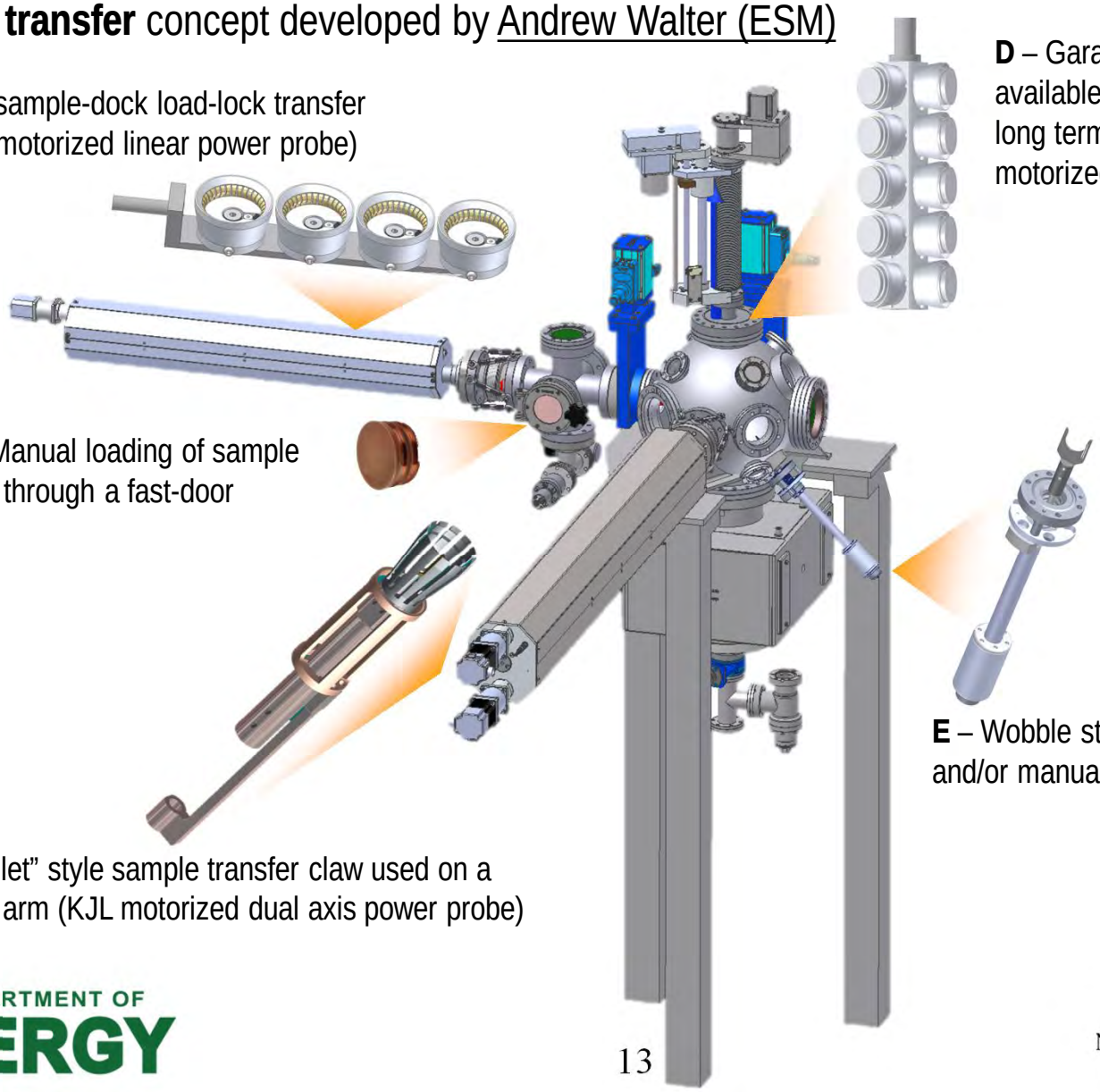

A – Manual loading of sample puck through a fast-door

E – Wobble stick for sample cleaving and/or manual transfer to garage

C – "Collet" style sample transfer claw used on a transfer arm (KJL motorized dual axis power probe)

SIX SMS: sample transfer operation

- All the motions in the sample transfer unit are motorized since the beginning (not the wobble stick)
- Cameras will be provided on the load-lock chamber and on the preparation-chamber

Resource Challenges:

- Automatic sample-transfer option is desirable for two reasons:

  A – prevent damages to the SmarAct piezo-stages which can stand small loads/torques

  B – minimize the number of accesses and the time people spend in the experimental room for temperature stability reasons

- Software/Controls for the automatic transfer represents a risk (limited resources in-house, difficult to outsource it to an external company given that it will not dispose of the totality of the hardware)

Sample manipulation and CCD status

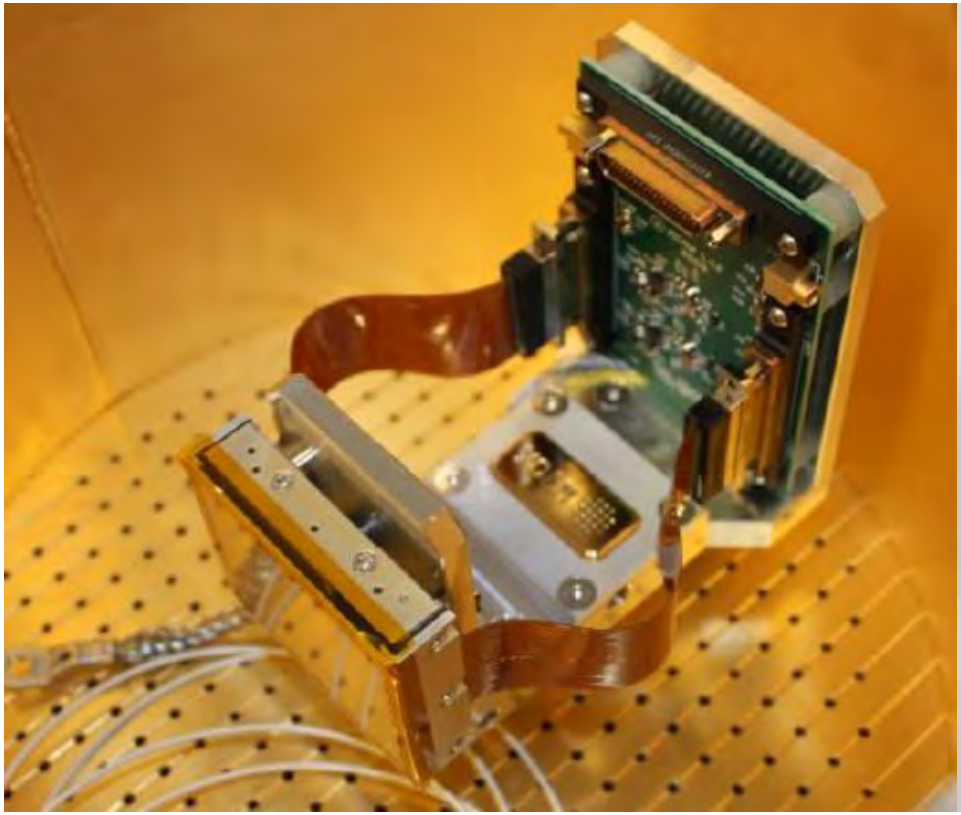

Part 2 – SIX CCD Detector

Requirements for the SIX Detector

- **Spatial resolution: FWHM = 2 µm** (at least in the vertical, energy dispersing direction)
- **Active imaging area: at least 40 mm (H) x 25 mm (V)** (to collect the two collimated beams)

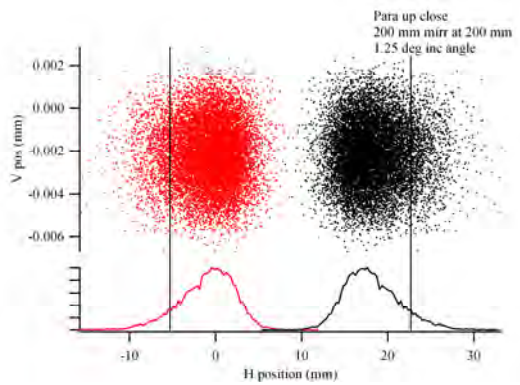

- **High Quantum Efficiency: > 80% at 1000 eV** (i.e. no antireflection coating is allowed)
- **Low background reading noise**: few e^- rms
- **Low dark current noise**: < 0.001 e^-/pixel/s (detector temperature < -100°C)
- **High vacuum compatibility** ~ 10^{-7} mbar
- **Tight vertical stability** at the sensor of 0.4 µm

SIX Detector: XCAM CCD Camera

- **XCAM-3005 RIXS-Cam Camera**

  *Contract awarded on Feb 10th, 2015.

  Lead time 18 months. *

- **2 EM (electro-multiplying) CCD 270-40 from E2V**

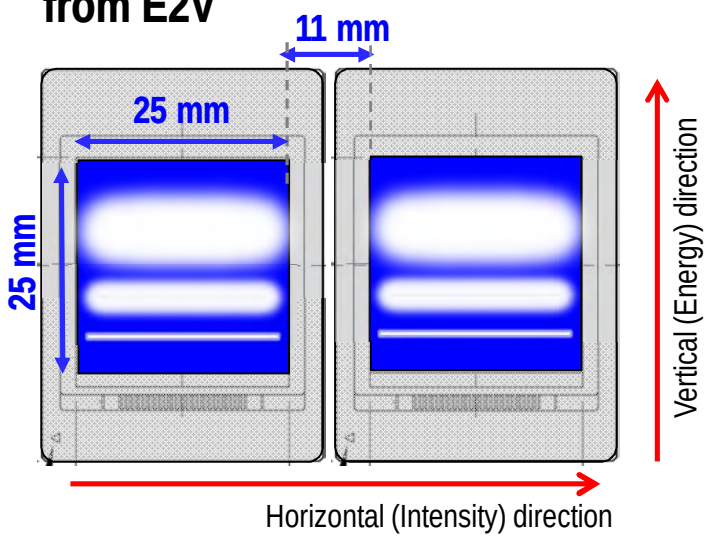

	XCAM CCD	unit
Sensor model	E2V CCD 270-40	
Sensor size	25 x 25	mm^2
Pixel size	16	µm
Dead Layer/Window	50 (Si)	nm
CCD Thickness	10 (zero-field) + 6 (depleted)	µm
Surf. Flatness	±20 PV	µm
Sensor size	1632x1608 pixels*	
Read noise	1§	rms e-
Read time	1	s
Charge Cloud FWHM	18	µm

- **State of the art CCD camera**: our camera will be the second product of this kind. The first one will be delivered to PSI, who contributed to its development (delivery by the end of 2015).

SIX Detector: Electro-Multiplying sensors

EM CCD 270-40 from E2V has **two** types of **output**:

- **High-Responsivity (HR)** at the end of the normal register (50 kHz – < 12 e^- rms readout noise)
- **Large-Signal (LS)** at the end of the EM gain register for fast, high-sensitivity acquisition (**3 MHz – gain factor of ~150 – effective readout noise of 1 e- rms**)

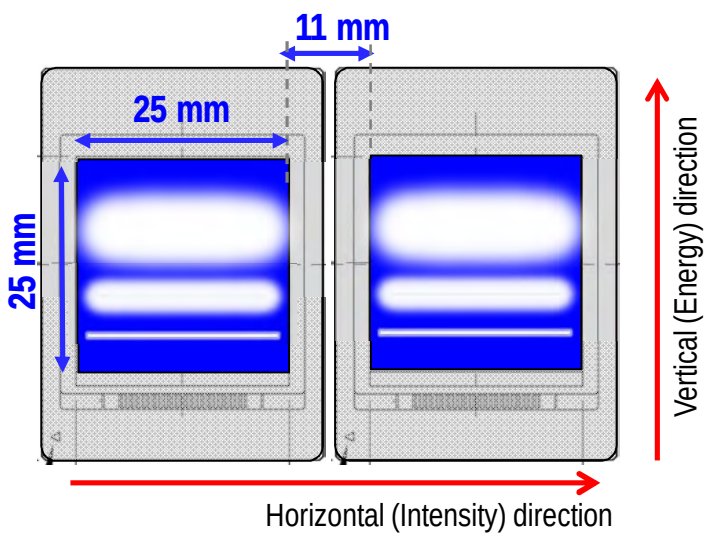

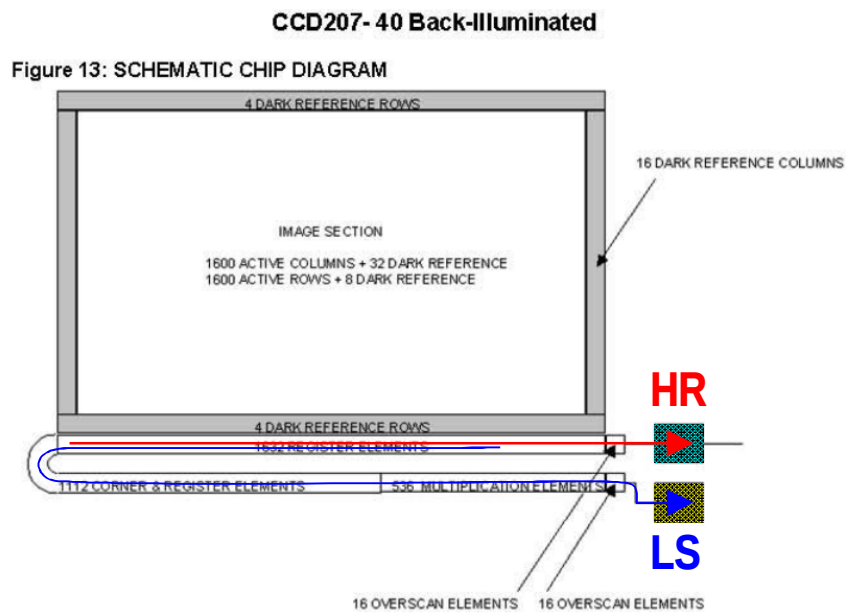

SIX Detector: how to reach the goal

Thanks to LS output of the EM CCD, it is possible to:

- Acquire weak signals with an effective reading noise of $1e^-$ rms
- Fast readout time of < 1 sec
- Imaging single photon events with few seconds of acquisition, avoiding events to pile-up, and with a high-duty cycle > 80% (look at the areal distribution)
- Enhance the spatial resolution to few μm with individual photon centroiding algorithm

SIX Detector: how to reach the goal

Proven results with the E2V EM CCD 270-40 by PSI (CH) – Open Univesity (UK) – XCAM (UK):

Simulations:

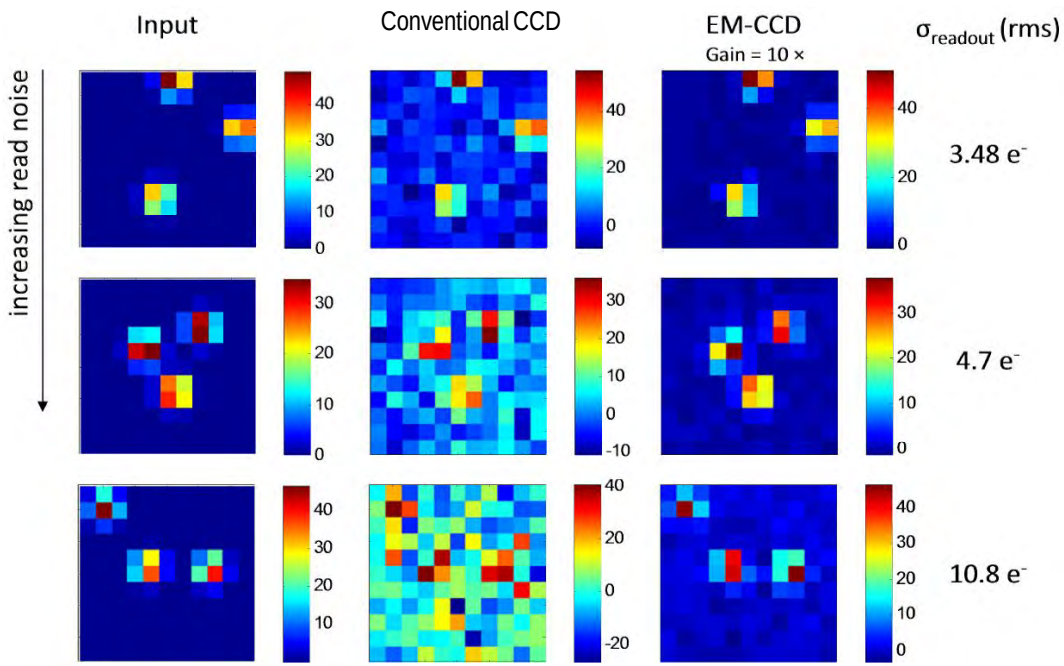

Test measurement with X-rays:

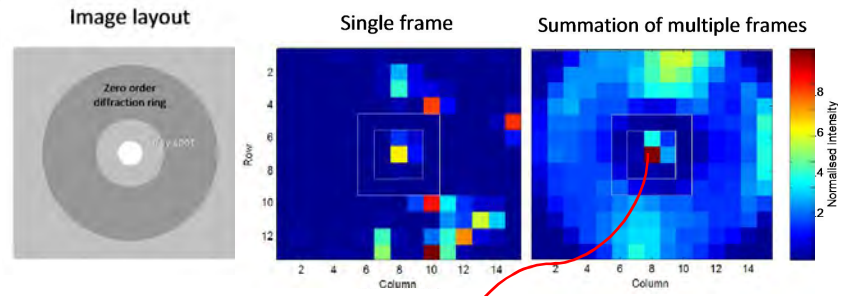

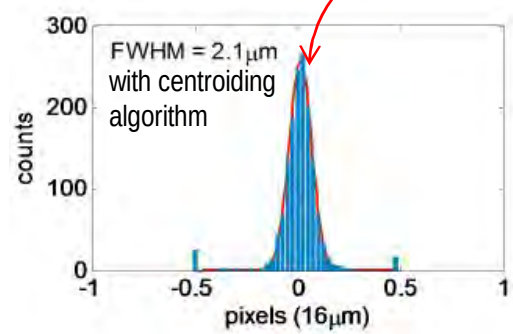

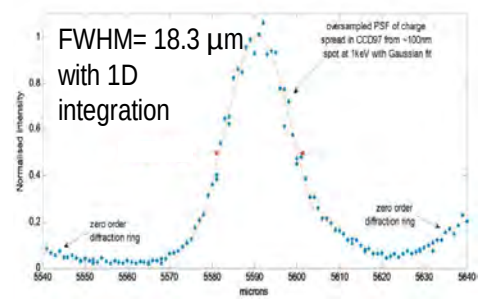

D.J. Hall et al., J. Inst. 7, C01063 (2012)
M.R. Soman et al., J. Inst. 8, C01046 (2013)
M. R. Soman et al., Nucl. Ints. Meth. Phys. Res. A 731, 47 (2013)

U.S. DEPARTMENT OF ENERGY

SIX Detector: the mechanical design

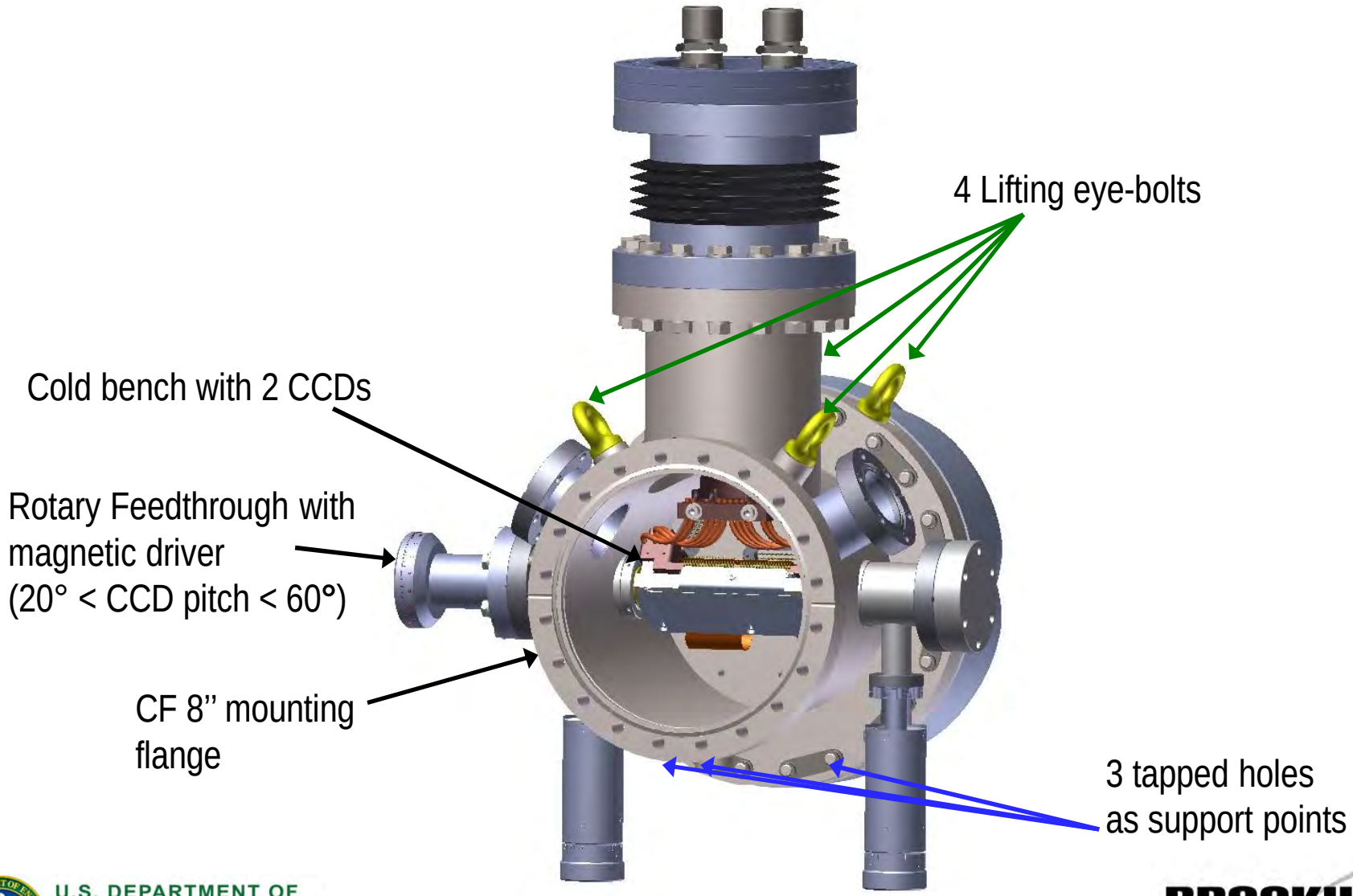

SIX Detector: the mechanical design

Cold Head of ARS closed-cycle mixed refrigerant cooling system (*to be purchased. Lead time 12 weeks.*)

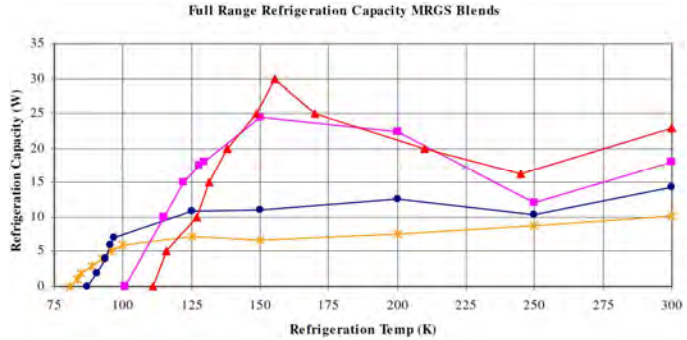

Temperature at the cold head
~ 150 K with MRGS-125 gas mixture

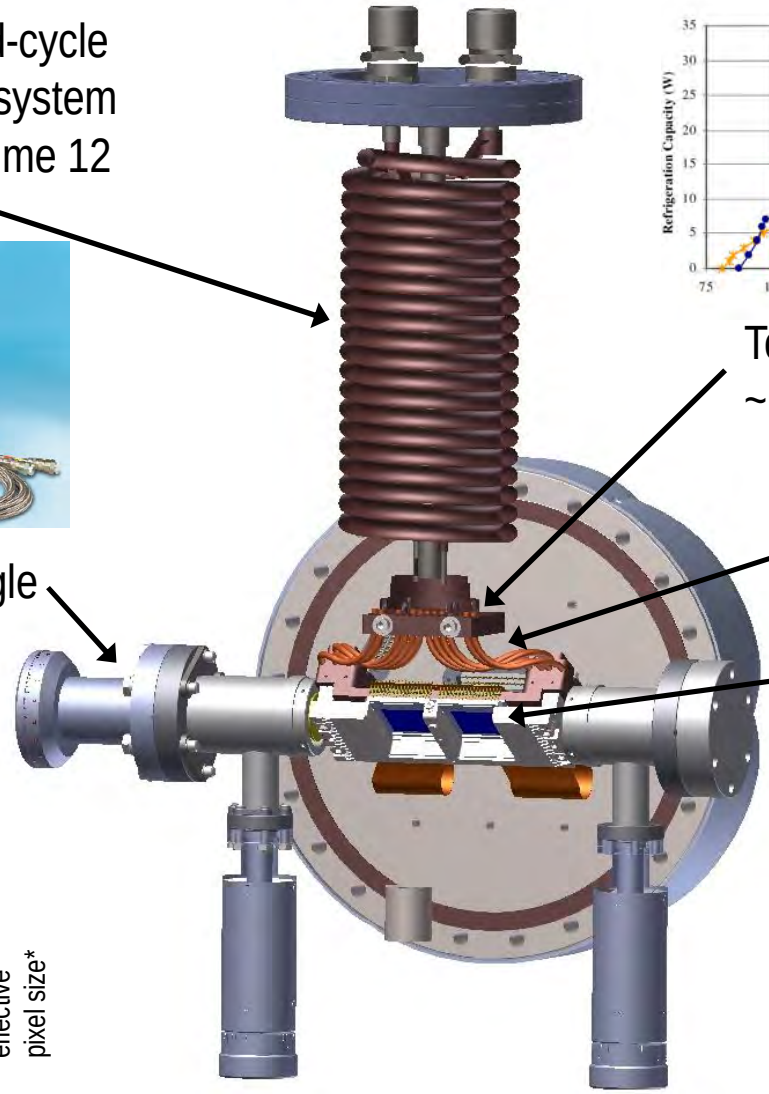

Cu-braids

Temperature at the sensors
~ 170 K

Controlling the sensor angle to enhance resolution:

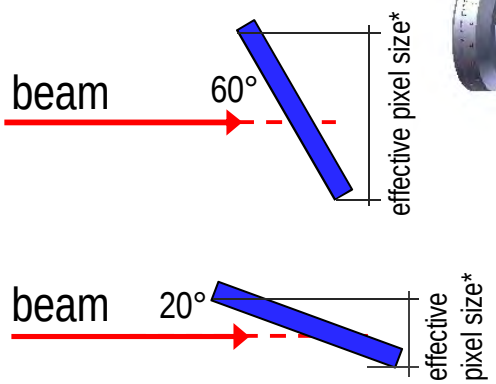

SIX Detector: achieving stability requirement

- Vertical stability requirement of 0.4 μm at the sensors to achieve 100'000 Resolving Power
- **Mitigation/Precautions:**

Bridge-structure to support the bellows flange and to decouple the vibrations from the chamber body

Bellows and **Cu-braids** to decouple the vibrations induced by cold head from the CCDs

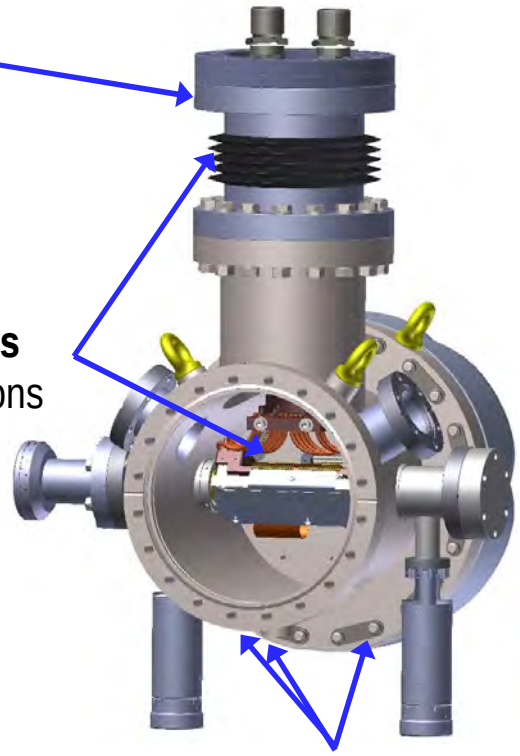

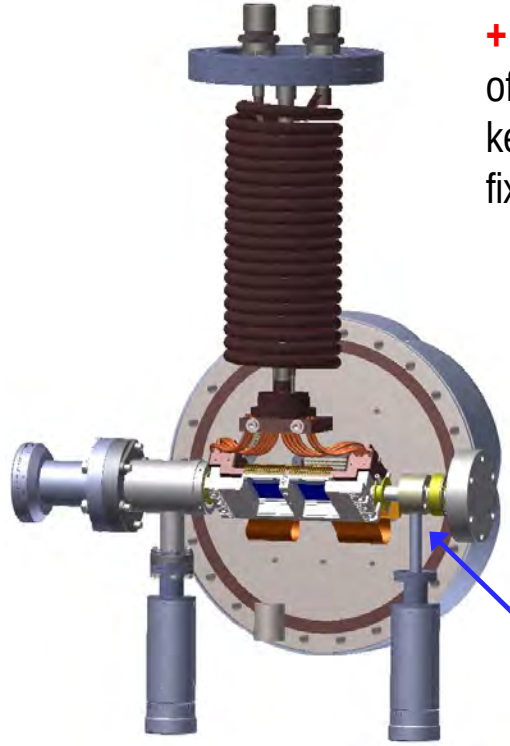

+ New Optical Design of the spectrometer to keep the detector at fixed height.

Lock-mechanism on a linear driver to lock the shaft

Fixing points to be connected to a supporting structure, attached to the granite base.

U.S. DEPARTMENT OF ENERGY
BROOKHAVEN NATIONAL LABORATORY
BROOKHAVEN SCIENCE ASSOCIATES

SIX Detector Assembly

Straight-beam configuration:

Detector chamber
(*to be purchased*)

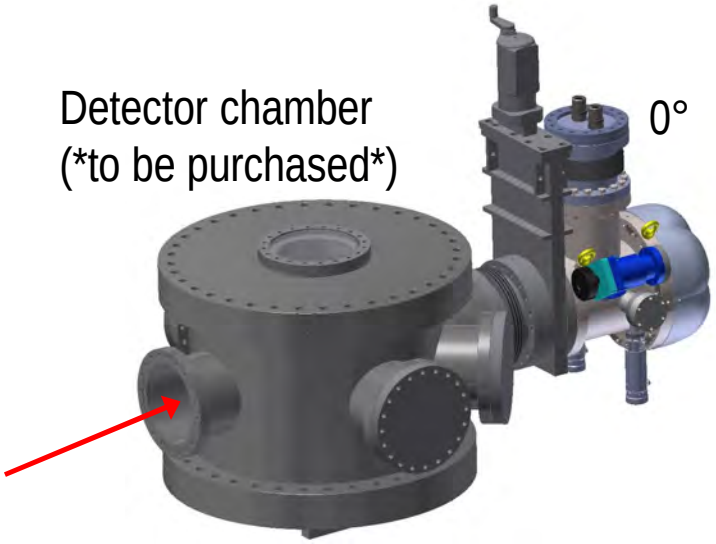

- CF 8" valve to isolate the CCD from the detector chamber

- Right-angle valve for connecting a pumping station to maintain vacuum

Polarization-analysis configuration (<u>not in SIX scope</u>):

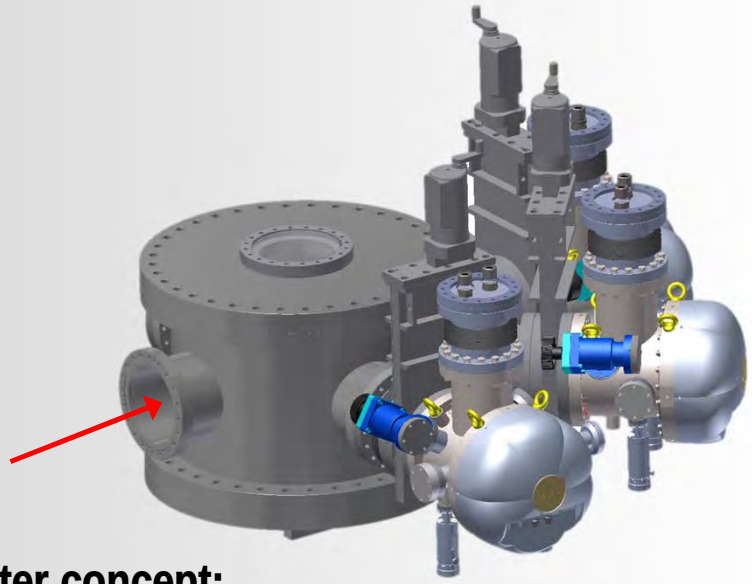

Polarimeter concept:
Carousel with 5 multilayers + free slot for straight beam

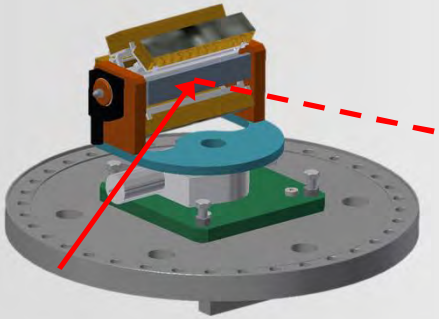

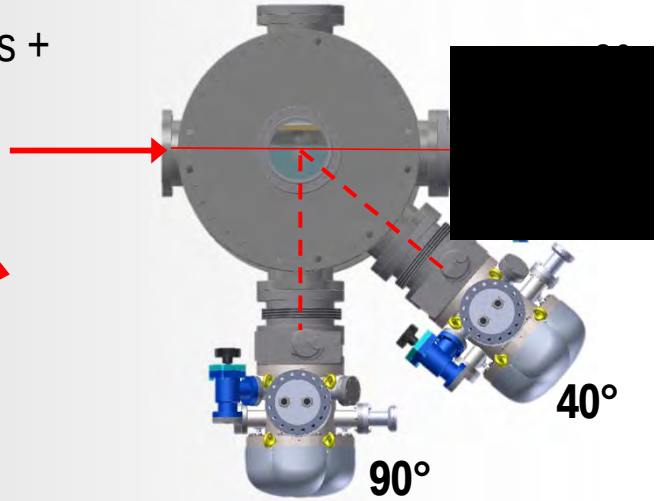

U.S. DEPARTMENT OF ENERGY

SIX Detector: Controller & Software

- **XCAM Controller**
- **Software for basic operations** of the camera (acquire, read, save) as well as synchronization with an external shutter through standard TTL signal (source code not provided)
- **Software for centroiding analysis** of the images and for **spectrum extraction** (source code provided by PSI – under discussion)
- **EPICS integration** (source code provided)

Questions are welcome!

Stability Test from ESM SmarAct assembly

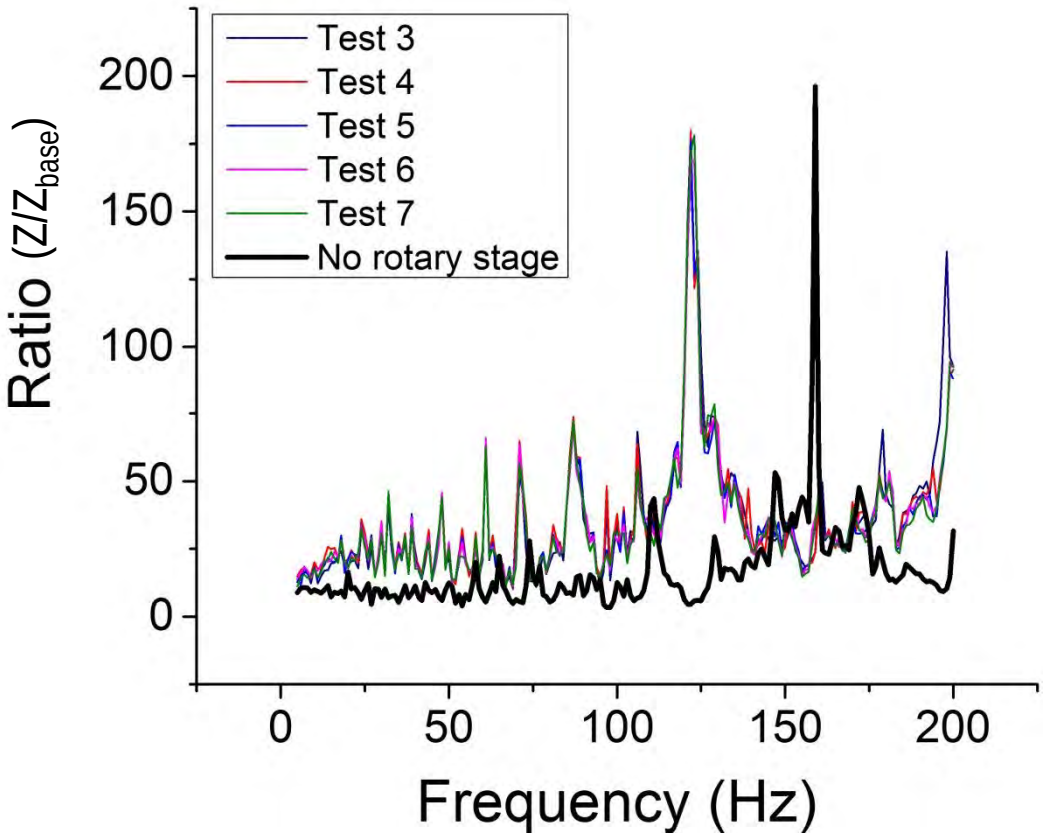

Measurements performed by Weihe Xu, Evgeny Natsareski

Amplification factor of 10 from 0-200 Hz without ϕ rotary stage. Extra factor of 2 at least with ϕ rotary stage. Precautions (double bearing) and improvements (modified L-bracket) will be considered during the design phase of the SIX SMS.

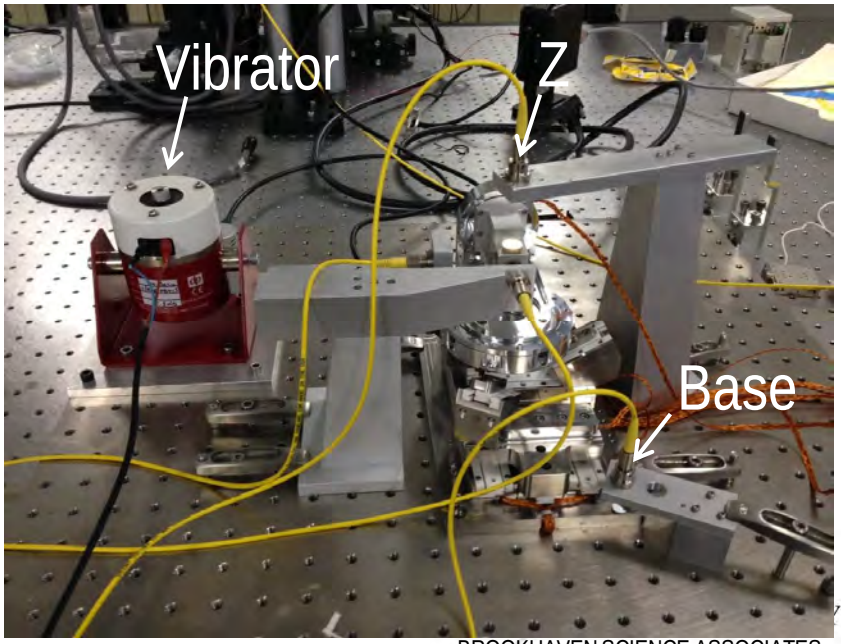
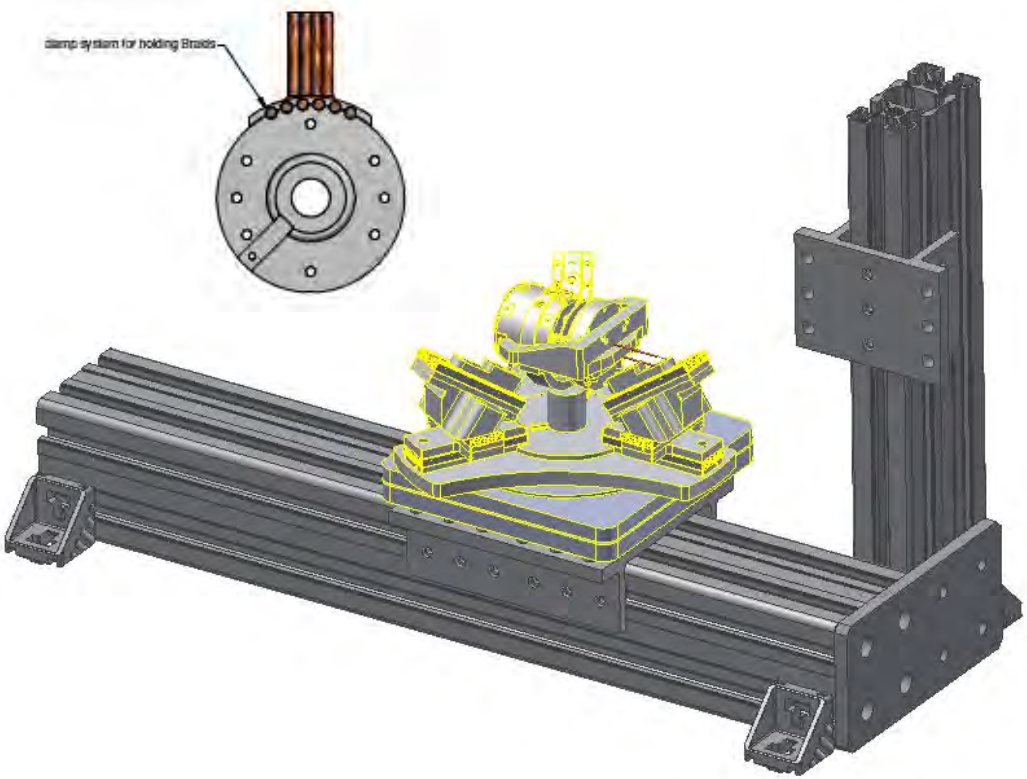
Test measurement studing the braid configuration