NSLS-II 12-ID (SMI) Endstation Review

Meeting Date: April 14, 2015

The objective of this review is to assess the status of the NEXT endstation final design for the SMI beamline and its readiness to proceed to, or continue with, the construction phase. As of April 2015, most of the major endstation procurements are progressing and are expected to be awarded in the third quarter of FY15 and a number of smaller procurements and in-house design/build components remain to be completed. The review will identify any major residual design risks that must be mitigated prior to the start of full construction. It will also present an opportunity for support groups (Utilities, Safety Systems, Controls, ES&H, QA) to review the endstation designs as a whole and identify potential issues.

SMI (12-ID) Endstation Review Panel Charge Questions

1. Does the endstation's portion of the project performance baseline address the beamline's scientific program objectives? Yes - Based on the presented material the endstation meets the performance baseline. Is the endstation final design technically mature, sound, and likely to meet the performance expectations identified in the project performance baseline? Partially – for example the SAXS flight tube vacuum system needs to be completed and the beam stop is not yet included in the design. The Transfocator design is well advanced (has been contracted out and going through review with Contractor) and the chamber design for the WAXS detector is advanced.

2. What are the major residual technical design risks, and are appropriate steps being taken to manage and mitigate these risks? SMI needs to finalize the design/design requirements and installation plan prior to going out to procurement. For example the implementation of the Pilatus3 1M detector creates operational risks that should be addressed. Interface between SAXS flight tube and WAXS chamber needs to be finalized prior to going out to procurement.

3. Is the design effort consistent with the planned procurement/fabrication strategy and sufficiently mature to support procurement/fabrication of major components? SMI needs to utilize the engineering resources strategically to meet the project deliverables.

4. What ES&H/QA issues and risks remain to be addressed, if any?

ESH issues identified. Equipment coming from X22 should be reviewed to assure NSLS-II requirements are met.

No major QA risks were identified. Refer to comments and feedback section for general QA comments.

5. Have the interfaces between endstation subsystems and Common Systems and Beamline Controls been identified and detailed sufficiently to support successful endstation construction? Utilities interfaces were not presented but were identified as already installed. The interfaces for PPS were identified for the removable beampipe. The interfaces for EPS were not sufficiently identified in the presentation. SMI needs to focus attention on controls. See further details in the comments and feedback section of this report.

6. After construction and assembly, will this beamline's endstation(s) be able to sustain Instrument Readiness Review and lead to successful operations? Yes - The instrument design itself. However, SMI needs to assure that all of the appropriate documentation is ready and unreviewed ESH issues have been resolved. Refer to comments and feedback section for general QA comments.

Comments and Feedback:

In general a number of questions were asked by the review panel and attendees in regards to the design and operational feasibility of the endstation components based on the information provided in the presentation. Elaine provided responses to show how and why the system will work as intended as well as limitations of the system components. Such questions addressed the vacuum system requirements, CRL Transfocator, SAXS flight path, endstation detectors, hoisting and rigging of endstation chamber components, assembly of components, ordering of components, and installation of the components.

The reviewers provided additional comments and feedback below in the areas of scientific, engineering, ESH, QA, controls, vacuum, assembly/installation, and utilities. The SMI group should consider the feedback provided in the completion of the endstation design.

Scientific:

Although the liquids endstation is only partly part of the beaseline scope, the GIXD capability should be developed at least conceptually (design/calculations). In order to develop this endstation into a state-of-the-art liquid surface scattering endstation, x-ray reflectivity and diffraction should be obtainable somewhat simultaneously and with similar time resolution.

It might be worthwhile to investigate at least conceptually the possibility to add beam steering (e.g. via an insertable/removable downward-reflecting mirror placed just before the GISAXS instrument) for liquid surface work to the GISAXS station. Although this would not be part of the base scope, the design should provide a route for adding it later, based on user demand.

The SMI team has demonstrated a solid progress and a careful attention to the design of the beamline and the choice of the implemented solutions. In addition to the technical characteristics of the beamline, SMI is concerned with endstation versatility, user friendliness aspects, and its compatibility for a broad range of the experiments. The integration of different type of detectors, SAXS and WAXS, for broad q-ranges should be considered carefully. The choice of WAXS detector is quite important from this point of view since the challenges might be related to the compromises between the energy range, vacuum compatibility and the requirement for windows.

It should be given some priority for the development of a liquid part of the beamline, at least on the level of clear concept and the desired performance parameters.

Engineering:

The GIWAXS chamber design is advanced, internal cable management is adequate, and hoisting procedures for the clam-shell by operators is mature.

Assembling the Pilatus detector stage and z-rail inside the SAXS flight tube in the hutch is not trivial. Advancing to a comprehensive design of the overall SAXS assembly consisting of the pilatus3, SAX detector rail and the flight tube chamber sections prior to purchase and fabrication will identify assembly challenges and requirements for installation of the constituent components. Early realization for the self-identified critical aspects of the custom Pilatus3 (Sensor protection, bleed-up procedure and water to vacuum connections) will assure an encompassing design for the SAXS flight tube sections. The detector stage and flight tube designs should incorporate the ability to retrieve the detector from any location within the 8.1 m long flight tube assembly in the event of a mechanical failure.

Developing a controls logic diagram during the final design phase of each of the endstation systems will contribute to the design details and establish a clear path for the controls support to develop the mechanical and vacuum schemes.

The single length of lead shielded pipe may require an additional section with a flange interface following further investigation for achievable installation in the B hutch. A simple solution to include a flange interface and labyrinth may contribute to the weight but the simple supporting technique will support the change of design.

Obtaining full commitment from the allocated engineering support will be essential to advance the design of the endstation instrumentation to meet the goal for deliverables according to the timeline and schedule of the SMI beamline.

Space in the GISAXS endstation is high value real estate, mainly due to the close proximity of the focusing device (transfocator) to the sample chamber. The presented material focused on sample chamber, sample stages, SAXS and WAXS detectors and SAXS flight tube. However, many 'smaller' beamline components that are typically found in an endstation, such as beam diagnostics, beam visualization, slits, attenuators,… were at this point not present in the design. Integration of such components should occur prior to finalizing all the vacuum chambers/sections as a later integration might be hampered by space constraints.

It is planned to use the GISAXS sample chamber also in air (without the top cover) for certain experiments. Having an 'insert' that would protect most of the vacuum surfaces might help in keeping the chamber clean. The sealing surfaces would need to be protected when the lid is off and the chamber is used in air.

For the detector translation inside the SAXS flight tube, a lower accuracy solution (e.g. V-rail) should be investigated, as such would be easier to assemble inside the chamber and 'parasitic' motions during a z-translation could be compensated with the detector x/y translations.

ESH:

As identified in the presentation:

The beryllium window in the B hutch will need to be approved by SHSD.

The lift plan for the clamshell sample chamber cover needs to be finalized.

The utilities interfaces for the cable drag chain and water/air/vacuum interfaces need to be reviewed.

The movable beam pipe and support needs design and review, particularly for lifting/moving.

In addition, all the components being reutilized from NSLS need review for electrical, pressure and mechanical compliance with NSLS-II requirements.

QA:

Design review(s) for A1/A2 equipment needs to be completed, documented, and actions closed. A top level traveler that verifies installation/commissioning readiness needs to be developed and executed. Operating procedure/manual needs to be developed and personnel trained on it. All these items need to be completed prior to an IRR.

Vacuum:

Design of the vacuum system for the endstation is underdeveloped and should progress as soon as possible, e.g. selection of vacuum pump for the SAXS flight tube could determine pumping port size/location, support of the pump by the tube stands, etc.

The GISAXS/ WAXS endstation design and expected operational requirements for pumping and venting need to be finalized. This will allow high level control logic to be developed as well as vacuum system hardware to be specified and procured. The vacuum control logic for various SAXS/WAXS, shielded pipe configuration(s) to allow safe, controlled, pumping and venting, strongly suggest a dedicated PLC for endstation vacuum control. This approach is underway for the HXN endstation. The Vacuum Group is constructing a PLC testbed to allow off-line testing and development to prevent accidental damage to expensive turbo pumps and beryllium windows. This testbed will also allow development and testing in parallel with final assembly of the endstation vacuum system. The endstation PLC will have a touchscreen for local operation as well as control through EPICS and interface with the EPS PLC. Much of the NRE for this effort can be leveraged on all beamlines including SMI. Rack space needs to be considered for this endstation PLC. The Vacuum Group is available to help with this activity.

The vacuum system downstream of the FOE should be reviewed to ensure adequate pumping is provided to meet design pressure and identify any outstanding vacuum hardware that needs to be

procured to support installation schedule. Items such as fast valves, roughing valves, hardware, ion pumps etc.

The beamline would benefit from the addition of a remotely operated (EPICS) RGA located somewhere between the FOE and the Transfocator to intercept and identify potential contamination migrating upstream from dirty samples before reaching the mirrors. A 2U rack space is required for the controller.

SAXS and WAXS chambers need to have turbopump forces accounted for in the design of pump ports where turbopumps are directly mounted in the event of pump failure. This has come up before.

A traveler needs to be generated listing all intermediate vacuum and pressure leak tests during GISAXS assembly.

Review Committee members:

M. Buckley (Chair)
L. Berman (Science)
L. Wiegart (Science)
O. Gang (Science)
M. Carlucci-Dayton (Engineering)
L. Stieger (ESH)
R. Todd (Vacuum)
J. Zipper (QA)

Attendees:

Refer to attached attendance sheet

5/30/2015

X

Michael Buckley
Research Operations Support Group Leader
Signed by: Buckley, Michael

Agenda and Charge for SMI (12-ID) Endstation Review

Date: 14th April 2015

Location: Bldg. 745 rm 156

The objective of this review is to assess the status of the NEXT endstation final design for the SMI beamline and its readiness to proceed to, or continue with, the construction phase. As of April 2015, most of the major endstation procurements are progressing and are expected to be awarded in the third quarter of FY15 and a number of smaller procurements and in-house design/build components remain to be completed. The review will identify any major residual design risks that must be mitigated prior to the start of full construction. It will also present an opportunity for support groups (Utilities, Safety Systems, Controls, ES&H, QA) to review the endstation designs as a whole and identify potential issues.

Time	**SMI (12-ID) Endstation Review**	**Speaker**
8:30-8:45	Executive Session (Review Panel)	
9:00-9:15	Introduction	S. Hulbert
9:15-9:45	SMI overview	E. DiMasi
9:45-10:45	SMI GISAXS end-station	E. DiMasi
10:45-11:00	Break	
11:00-11:30	SMI Liquids end-station	E. DiMasi
11:30-12:00	Critical Issues	E. DiMasi
12:00-13:00	Executive Session (Review Panel)	
13:00-13:30	Close Out Session (Review Panel and SMI Team)	

Review Panel:

M. Buckley (Chair)
L. Berman (Science)
L. Wiegart (Science)
O. Gang (Science)
M. Carlucci-Dayton (Engineering)
L. Stieger (ESH)
R. Todd (Vacuum)
J. Zipper (QA)

Following the review, a report will be developed addressing the charge of the committee listed on the following page. The committee chair will organize the preparation of this report. Comments are welcomed by the attendees during the review.

SMI (12-ID) Endstation Review Panel Charge Questions

1. Does the endstation's portion of the project performance baseline address the beamline's scientific program objectives? Is the endstation final design technically mature, sound, and likely to meet the performance expectations identified in the project performance baseline?

2. What are the major residual technical design risks, and are appropriate steps being taken to manage and mitigate these risks?

3. Is the design effort consistent with the planned procurement/fabrication strategy and sufficiently mature to support procurement/fabrication of major components?

4. What ES&H/QA issues and risks remain to be addressed, if any?

5. Have the interfaces between endstation subsystems and Common Systems and Beamline Controls been identified and detailed sufficiently to support successful endstation construction?

6. After construction and assembly, will this beamline's endstation(s) be able to sustain Instrument Readiness Review and lead to successful operations?

The committee is requested to present their findings, comments, and recommendations at the conclusion of the review, and to send a report to the NEXT project director within three weeks of the conclusion of the review.

NSLS-II
12-ID (SMI) Endstation Review
Attendance Sheet

Date: April 14, 2015

Name	Title	Department/Division or Company
Mike Buckley	Research OPS Support Group Leader	NSLS-II
Lori Stiegler	ESH	NSLS-II
Mary Carlucci-Dayton	Beamline Eng. Group LEADER	NSLS-II
Steve Hulbert	NEXT PM	"
JOE ZIPPOR	QA	NSLS-II
Oleg Gang	Group leader	CFN
ROBERT TODD	VACUUM ENG.	NSLS II
Mikhail [illegible]	Sci scientist	NSLS-II
Amanda King	Designer	NSLS-II
Shujiam Yin	Controls	NSLS-II
Jeff KEISTER	PM	NSLS-II
SCOTT COBURN	ENG	"
RICK GREENE	LEAD TECH	NSLS II
M Fukuto	Scientist	"
Ben Ocko	scientist	CMP-MS
Daniel Bocescu	Mech. Eng	NSLS II
Lonny Berman	ABBIX PM	NSLS-II
Lutz Wiegart	Scientist	NSLS-II
Elaine Dimasi	Scientist	NSLS-II

PS Endstation Design Review of SMI

Elaine DiMasi
SMI Beamline Lead Scientist, NEXT Project
April 14, 2015

U.S. DEPARTMENT OF ENERGY | Office of Science

BROOKHAVEN NATIONAL LABORATORY
BROOKHAVEN SCIENCE ASSOCIATES

Review Charge and Agenda

- Overview Talk
  - Scientific program objectives
  - Performance expectations
  - Design maturity / planned procurements
  - Design effort
- GISAXS Endstation
  - Fabrication strategy
  - Major remaining technical design risks
  - Interfaces, ES&H/QA, Instrument Readiness
- Liquids Endstation
  - Fabrication strategy
  - Major remaining technical design risks
  - Interfaces, ES&H/QA, Instrument Readiness
- Critical Issues

SMI: Scientific Program Objectives

Structure and Assembly from Nanoscale to Mesoscale in Soft Matter:

Molecular Templating * Liquids and Wetting * Thin Films and Devices * Hierarchical Biomaterials

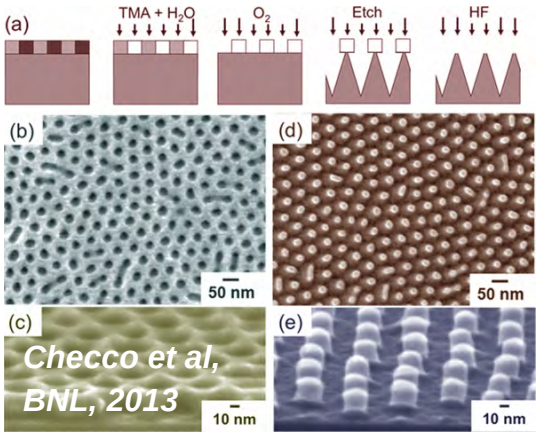

Checco et al, BNL, 2013

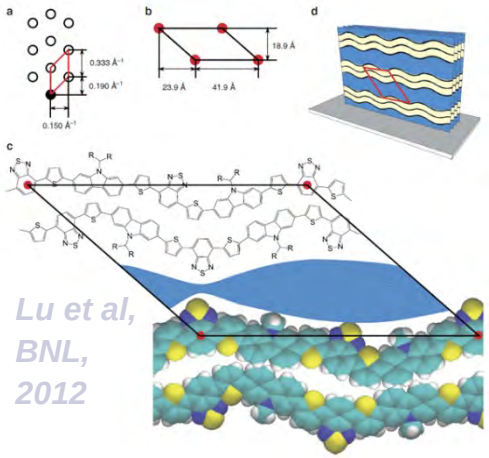

Lu et al, BNL, 2012

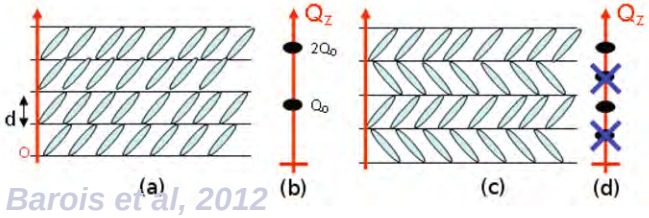

Barois et al, 2012

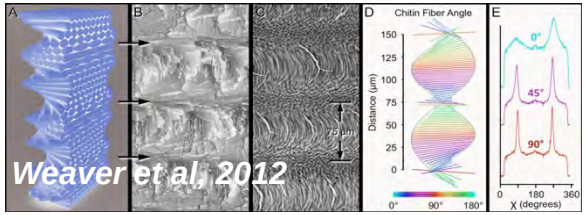

Weaver et al, 2012

Beamline Requirements:

* High brightness
* Contrast from P, S, K, Ca species
* GISAXS with low divergence mode for superior *q* resolution
* GISAXS with microbeam mode to map heterogeneous structures
* GIWAXS over entire energy range (order of magnitude in wavelength)
* Special support for Liquid Interfaces

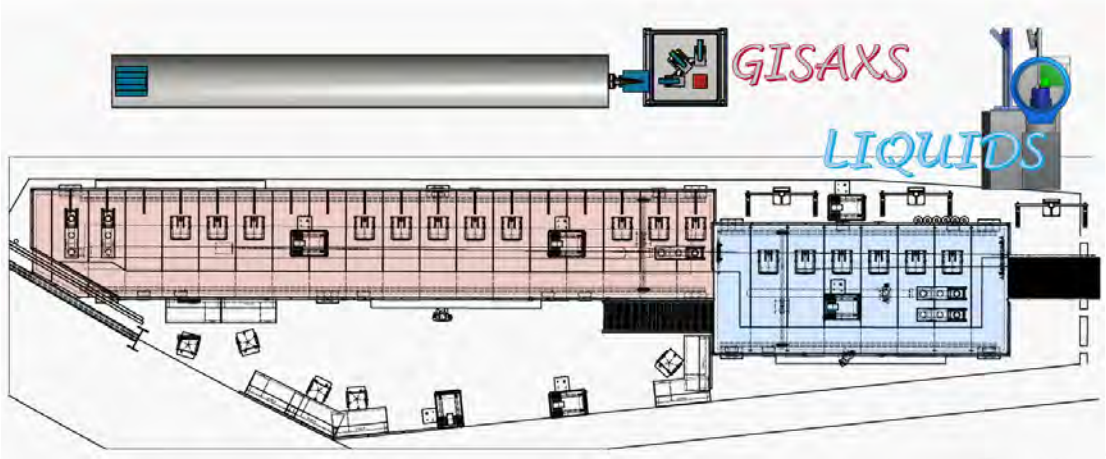

SMI Baseline Performance Specifications

Beamline Capabilities:

* Canted IVU23 source, 2.1-24 keV will be installed on inboard branch, windowless beamline
* Grazing Incidence Small/Wide-Angle X-ray Scattering with 20µrad beam divergence *or* 2.5 × 25µm microbeam, supported by CRL micro-focus optics, in downstream hutch 12-ID-C (ES2)
* X-ray reflectivity, Liquid Interface Spectrometer, 15 × 150µm beam, in-line hutch 12-ID-B (ES1)
* In future, upgrade to full canted build-out with additional undulator for Liquids, outboard branch
* NEXT baseline includes design for drop-in upgrade, with canted beam clearances

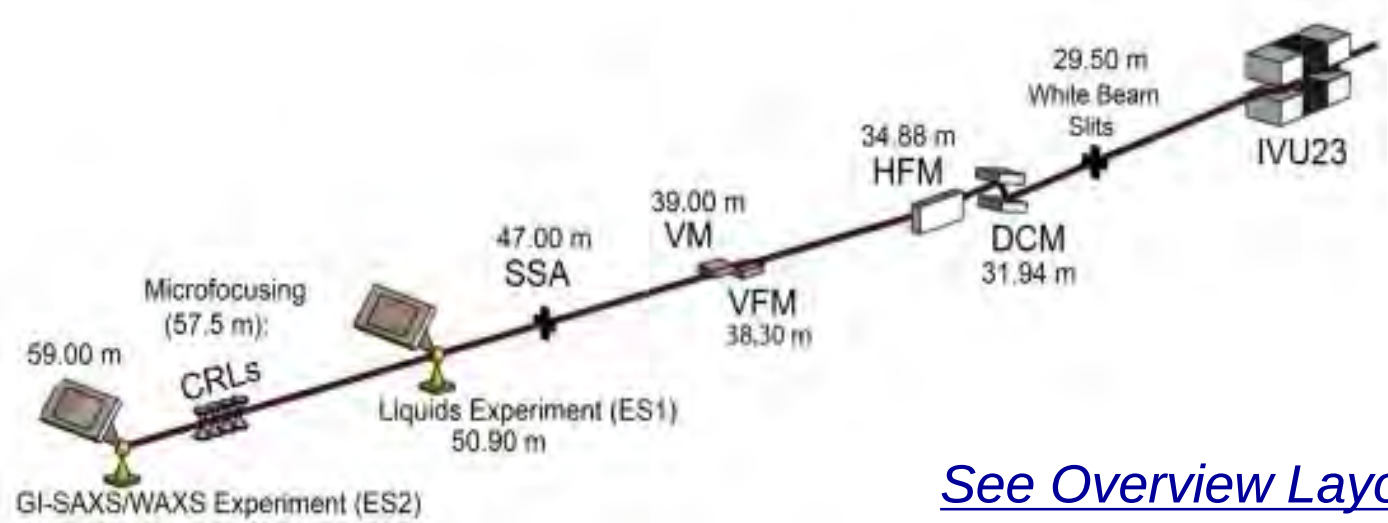

See Overview Layout.

SMI Procurement Status

Major Contract	Award	PDR	FDR	Expected Receipt	Commissioning Without Beam
White Beam Components: DCM, slits, masks, shielding	✓	✓	✓	8 Sep 15	16 Nov 15
Focusing Mirrors, Transport	✓	✓	29 Apr 15	15 Jan 16	1 Mar 16
CRL Transfocator	✓	7 Apr 15	10 May 15	23 Mar 16	9 May 16
Sample Vacuum Chamber	✓	✓	10 Apr 15	17 Jun 15	20 Aug 15
WAXS Goniometer	✓	n/a	n/a	30 Mar 16	7 Apr 16
Vacuum Sample Stages	(17 Jun 15)	*tbd*	(20 aug 15)	(22 jun 16)	(21 Jul 16)
SAXS/WAXS Beam Path	(8 Oct 15)	*tbd*	*tbd*	(28 Jun 16)	(27 Jul 16)
Area Detectors	✓	n/a	✓	1 Dec 15	14 Apr 16
Double Crystal Deflector	(20 Aug 15)	*tbd*	(22 Oct 15)	(16 Aug 16)	(25 Aug 16)

(parentheses: working schedule)

SMI Beamline Development Group

- Elaine DiMasi *lead scientist*
- Mikhail Zhernenkov *asst. scientist*
- Daniel Bacescu *mech. engineer* assigned to SMI and CSX
- Scott Coburn *mech. engineer* assigned to SMI and IXS
- Amanda King *mech. designer* assigned to SMI and SIX
- Sung-Leung (Ivan) So *controls engineer* assigned to SMI and ISS
- Rick Greene *technical coordinator* assigned to Complex Scattering Program: CMS, CHX, IXS, and SMI

Tracking mechanical engineering effort:

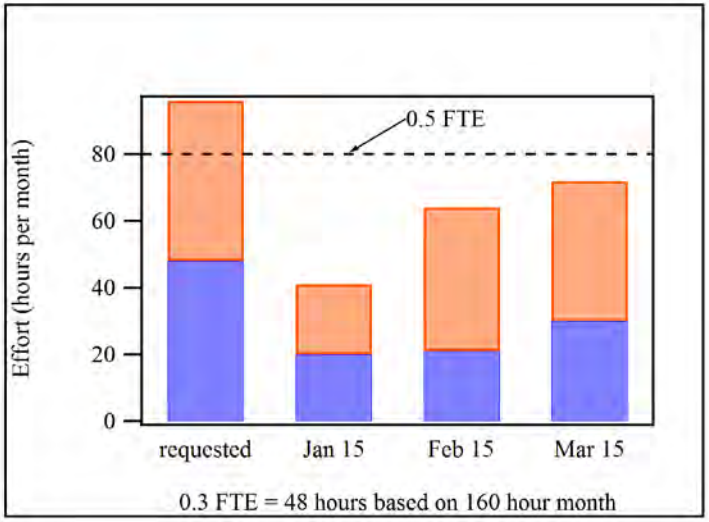

Would like to see this stabilize at 0.5-0.6 FTE, and would like to add a Data Scientist to SMI.

Liquids: B Hutch Overview

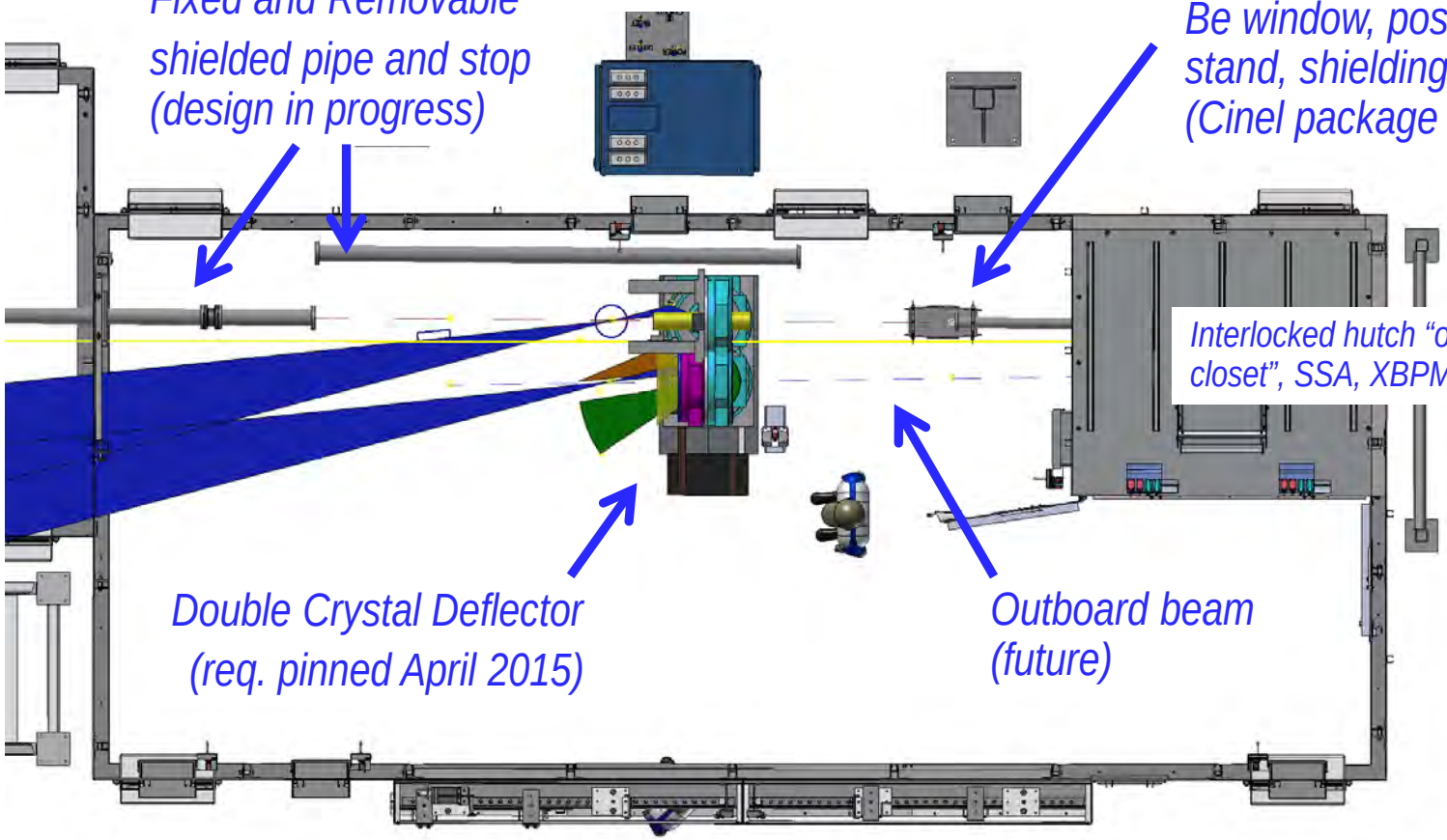

GISAXS: CRL Transfocator

- CRL Transfocator design for GISAXS micro-focus: Optical analysis documented by internal design review (PS-DRR-1007, 6 Oct 2014)
- Contract awarded to JJ X-ray, Feb. 2015
- Proposed design meets all specifications (see NX-C-XFD-SPC-SMI-013)
- PDR at vendor's site, 6-7 April 2015
- FDR at BNL, ~ 10 May 2015
- Delivery January 2016

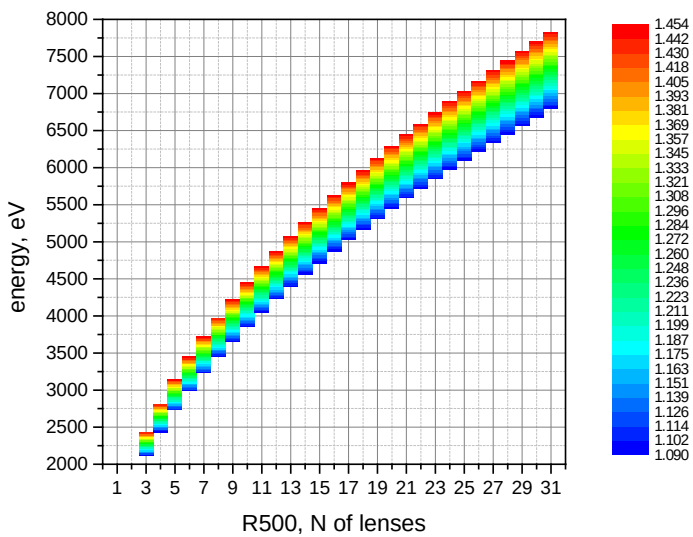

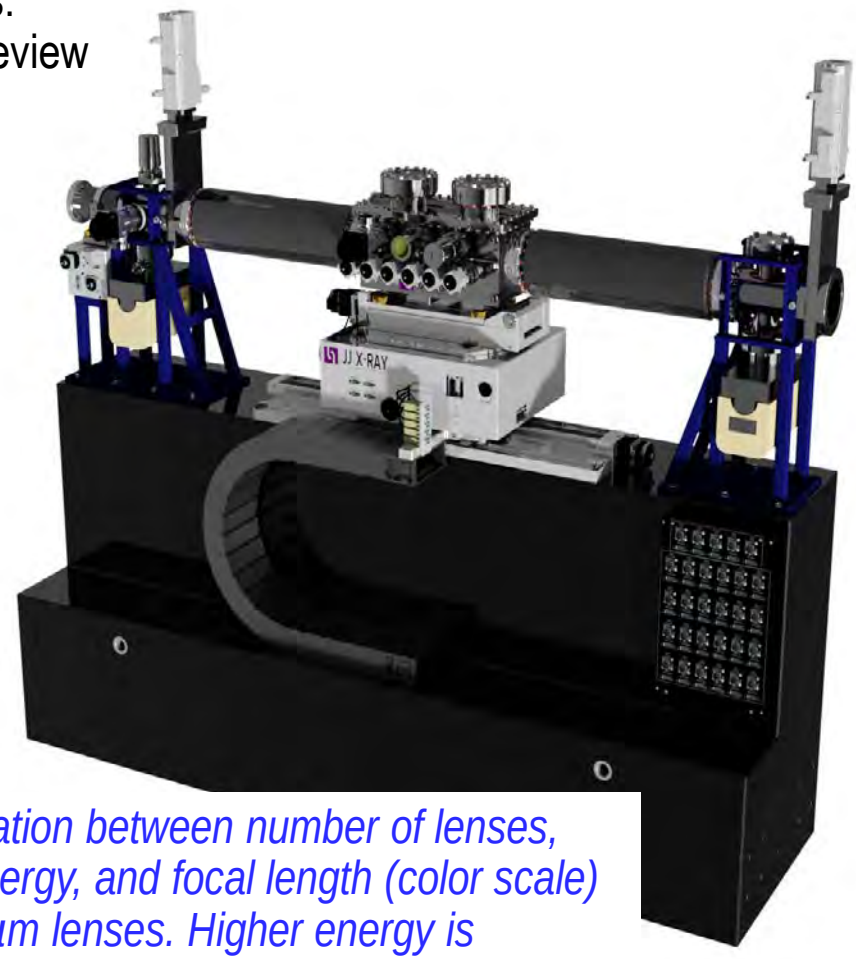

Left: relation between number of lenses, x-ray energy, and focal length (color scale) for 500µm lenses. Higher energy is captured with additional lenses, 50-200µm. Right: JJ X-ray's PDR concept.

GISAXS: CRL Transfocator Vacuum Components

- u/s ion pump (TiTan 100l/s)
- custom bellows (Mewasa), ID/OD 102/132mm 765mm free, 179mm compressed, 779mm extd.
- CRL chamber with external steppers, in-vacuum lead screw, magnetic rotary vacuum feedthrough
- d/s bellows, gate valve, and ion pump
- differential pumping tube within final bellow, with motorized X-Y, manual pitch-yaw

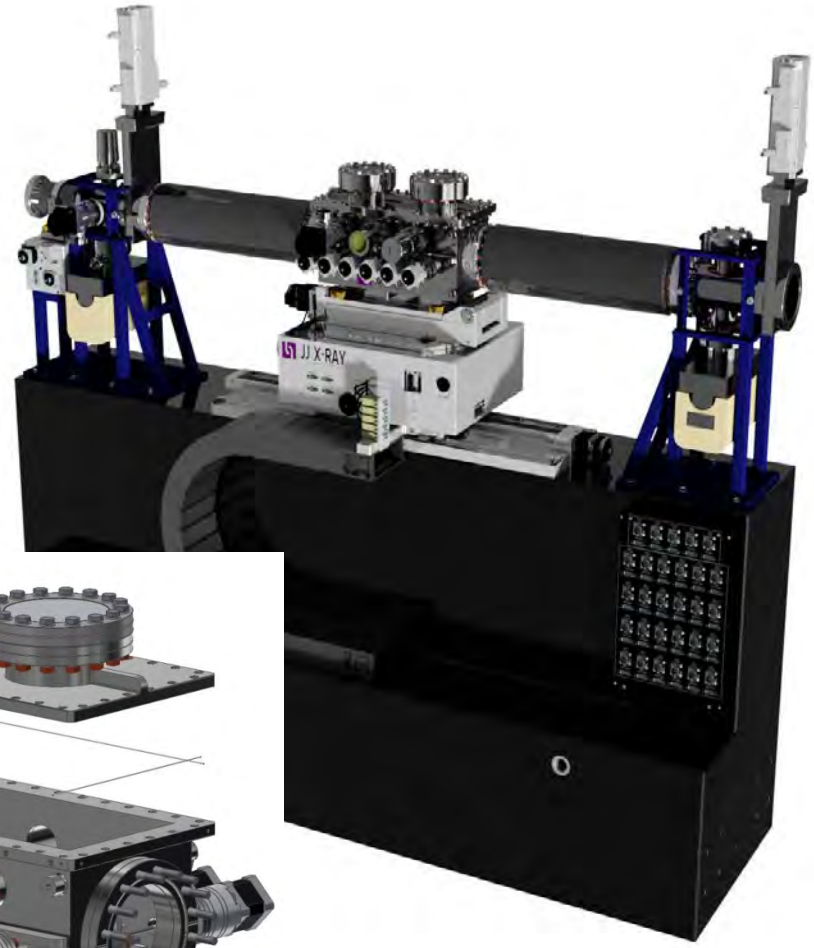

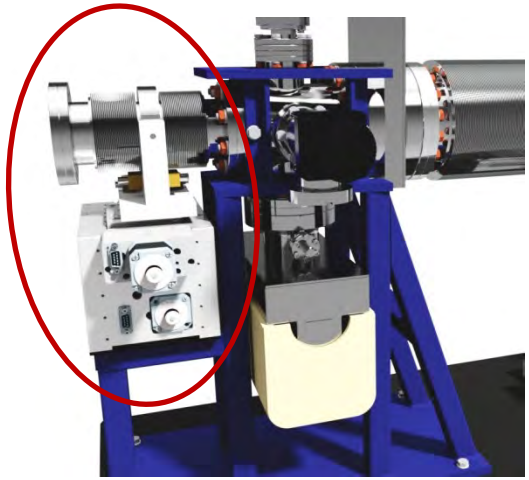

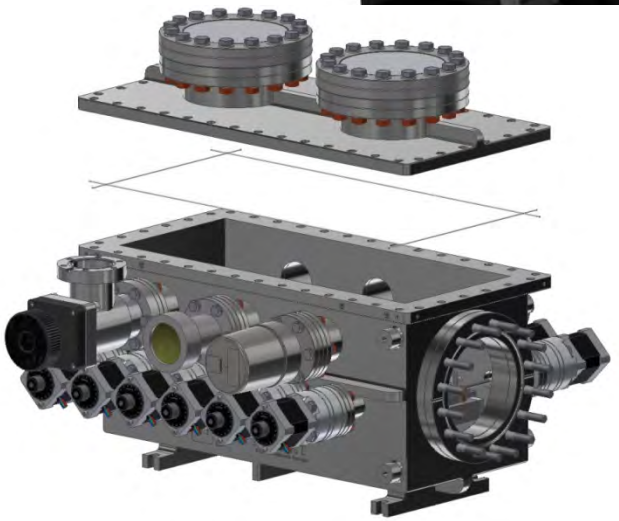

GISAXS Sample Vacuum Chamber, Stages

GIWAXS and Reflectivity measurements, tender to hard x-rays are supported.

- Chamber at 10^{-3} at 10^{-7} torr enables the frontier tender x-ray measurements, and also benefits most soft matter expts – SMI is a *windowless* beamline by design
- All specifications arising from desired *q* and real-space resolution have been defined (see Final Design Report, Ch. 7, Sec. 4.2 and NX-C-XFD-SPC-SMI-015)
- Sample positioners: submicron resolution, 13 d.o.f., specialized for surface scattering
- Dectris Pilatus 300K-W in-vacuum, area detector on 90°arc stage

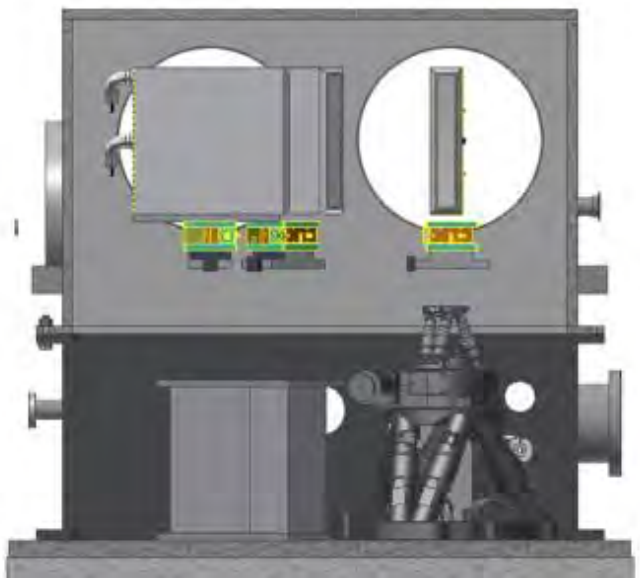

Left: chamber view from outboard side (beam enters from the right).

Right: examples of commercial hexapods and rotation stage.

WAXS detector arc stage is not shown.

GISAXS SAXS Flight Path

GISAXS measurements, tender to hard x-rays are supported.

- 0.9m OD, 8.1m long flight tube, internal rail and drive decoupled from vacuum chamber.
- Dectris supplying a custom half-in-vacuum Pilatus3 1M, 2.1-24 keV, delivery Dec. 2015.

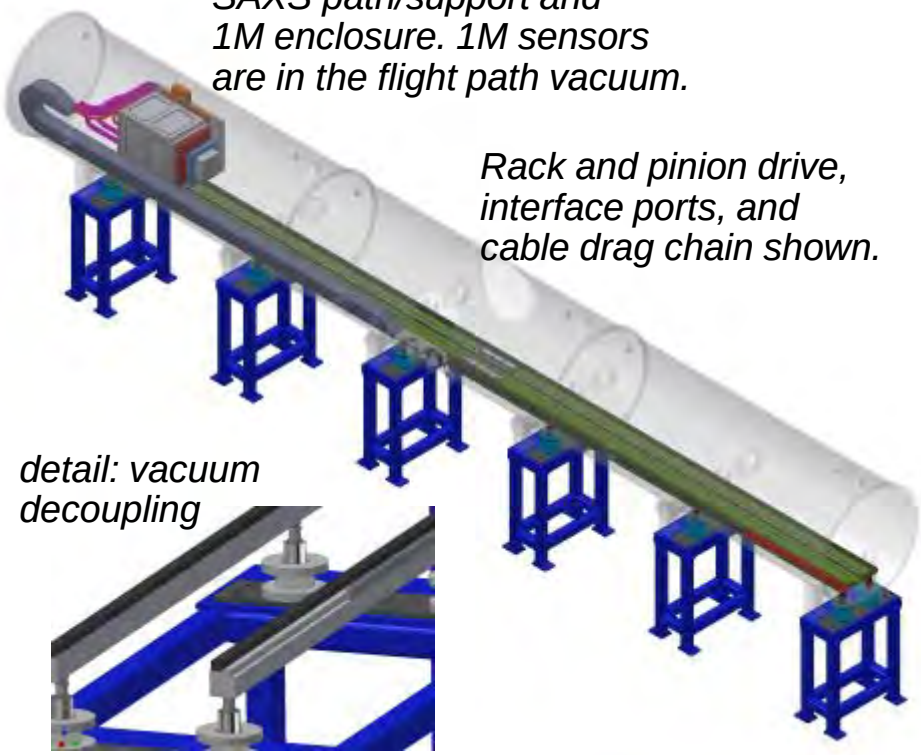

The in-house design activities include:

- *1M half-in-vacuum chamber*
- *XY translation of detector*
- *Z range 1.5 to 8m (sample-det distance)*
- *Procurement of the large flight tube*
- *Safety system for windowless vacuum*
- *Engineered protection for 1M sensors*

detail: detector enclosure

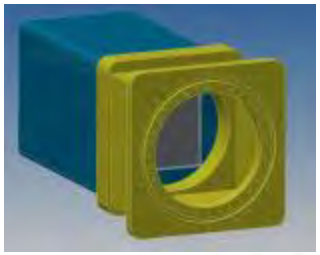

GISAXS Endstation Detectors

- Both detectors are very well matched in resolution to the beam.
  - SMI performed extensive beam simulations with Shadow and SRW
  - SPIE Proceedings paper on SMI optical design published 2014, with longer paper in preparation for 2015 *(co-authored with Niccolo Canestrari and Oleg Chubar, NSLS-II)*
- Detector Capability: GISAXS, low divergence.
  - Pilatus 1M well matched to beam properties: largest spot (2.1 keV, > 8m) just fills one pixel (figure: left)
  - XY stage supporting Pilatus 1M inside vacuum flight path will maximize *q* range capability (figure: center)
- Detector Capability: WAXS in Vacuum
  - Pilatus 300K-W will provide appropriate *q*-range and resolution over large *E* range (figure/table: right)

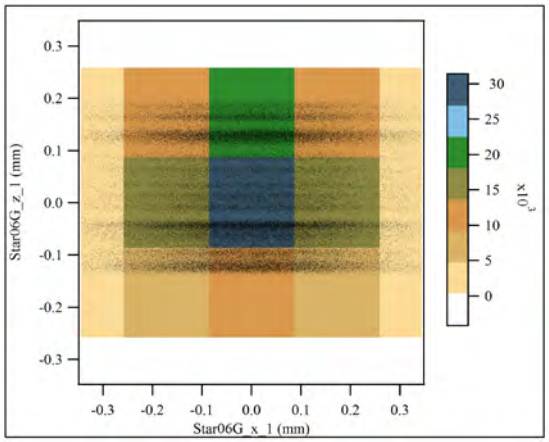

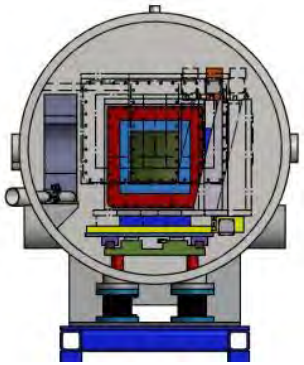

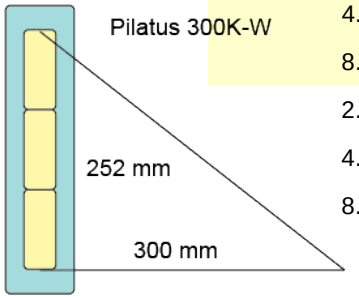

E (keV)	lambda	degrees	q (Å^{-1})
2.1	5.90	44.5	0.81
4.1	3.02	44.5	1.57
8.0	1.55	44.5	3.07
2.1	5.90	89.5	1.50
4.1	3.02	89.5	2.93
8.0	1.55	89.5	5.71
2.1	5.90	0.033	0.0006
4.1	3.02	0.033	0.0012
8.0	1.55	0.033	0.0023

GISAXS Detector Optimization

- Detector layouts were optimized considering entire energy range.
  - Minimum SAXS-sample dist. 1.5m: q_{max} = 0.5 Å^{-1} for E ≥ 18 keV
  - Maximum SAXS-sample dist. 8m: q_{max} = 0.01 Å^{-1} for E = 2.1 keV; pixel size 172μm ~ 22μrad; 66 μrad = 0.00007 Å^{-1} at 2.1 keV; 0.0003 Å^{-1} at 8 keV; 0.0005 Å^{-1} at 16 keV; 0.0008 Å^{-1} at 24 keV.

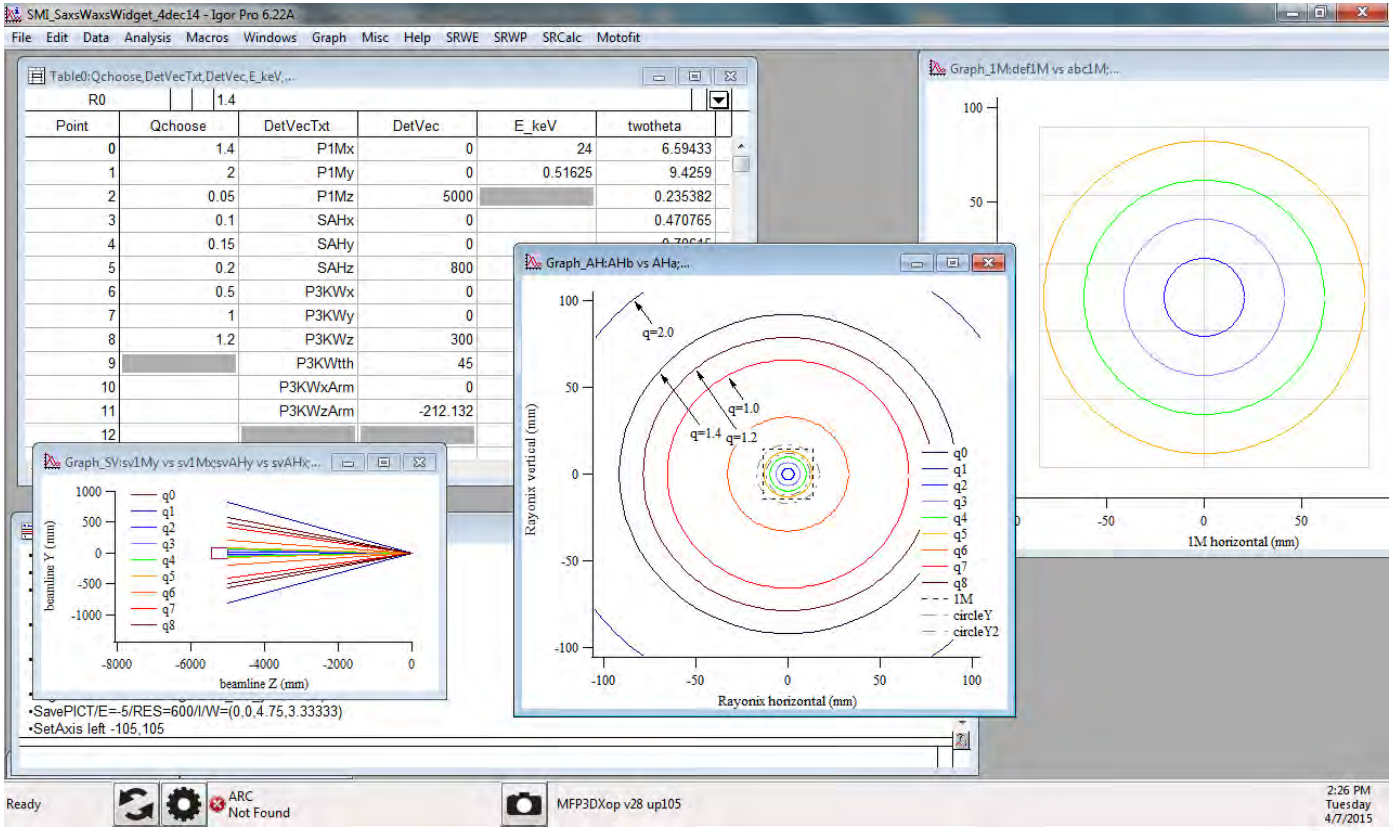

SMI: Vacuum Layout Progress

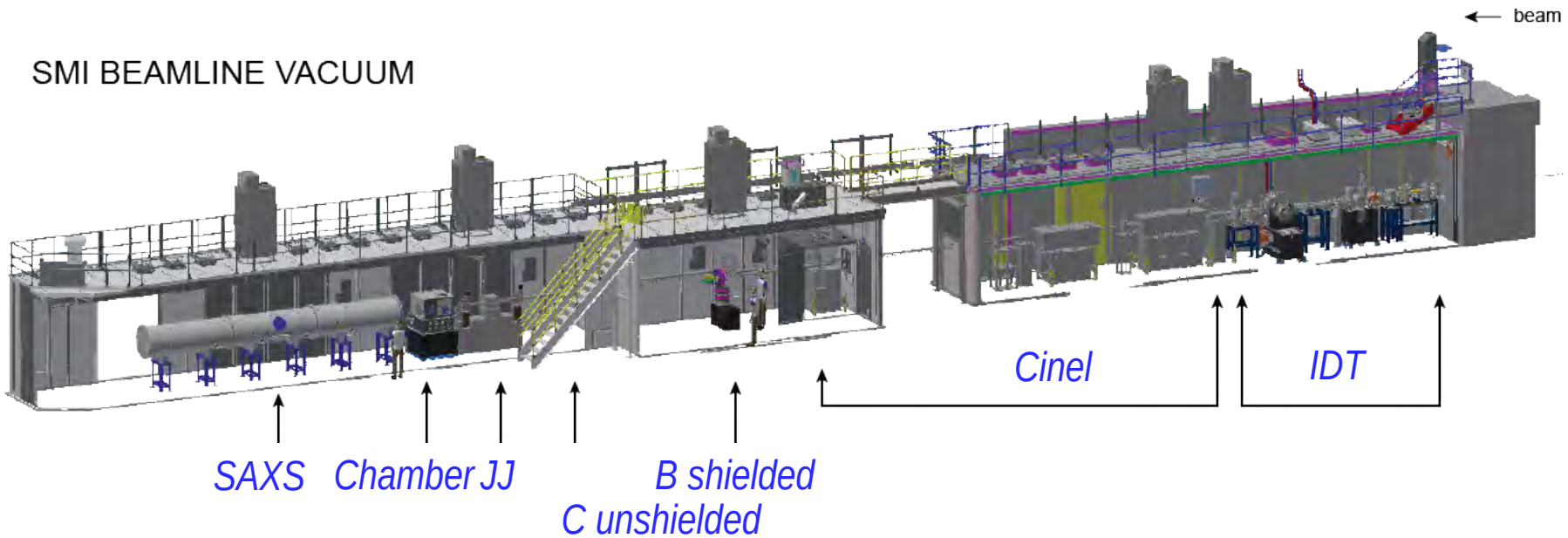

- Photon Delivery vendors supplying ion pumps and gauge sets (IDT, Cinel, JJ X-ray)
- Rob Todd has the orders for pump/gauge controllers and additional gauges
- B shielded pipe, to be discussed, may be added to Cinel contract at FDR 30 April
- All C hutch vacuum including ion, turbo, roughing, manifolds, and gauges in progress
- Activity being tracked as part of “Beamline Non-Optics” to be completed in 2015
- Design for FOE is complete, racks ready, and cable pulling may start April 2015

SMI: Windowless Beamline Safety

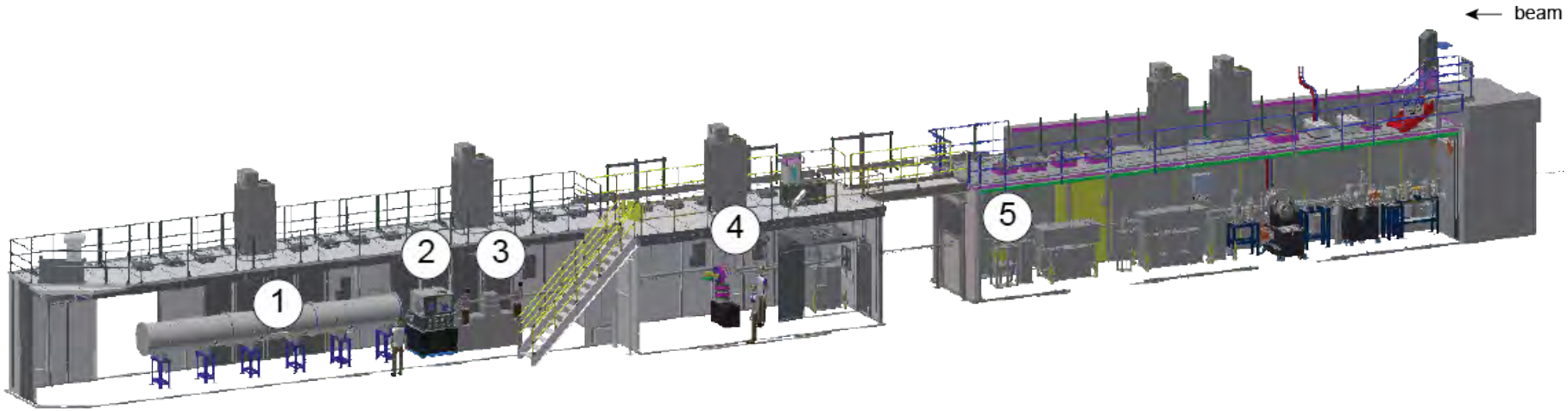

1. Pilatus 1M in SAXS tube has press fit water connections contiguous with vacuum at sensors. Water supply lines will be contained by in-air section (described later). Chiller is closed loop / low pressure fixed volume.
2. Pilatus 300K-W in WAXS chamber has water connection to be contained with in-air hoses.
3. A fast valve sensor is planned within or just u/s of the CRL vacuum section.
4. Cinel package supplies single sided Be window. SMI could procure double-sided Be/flange.
5. Fast valve location is just d/s of mirrors and will protect FOE optics.

To be designed and reviewed asap.

SMI Controls – Rack Layout Completed

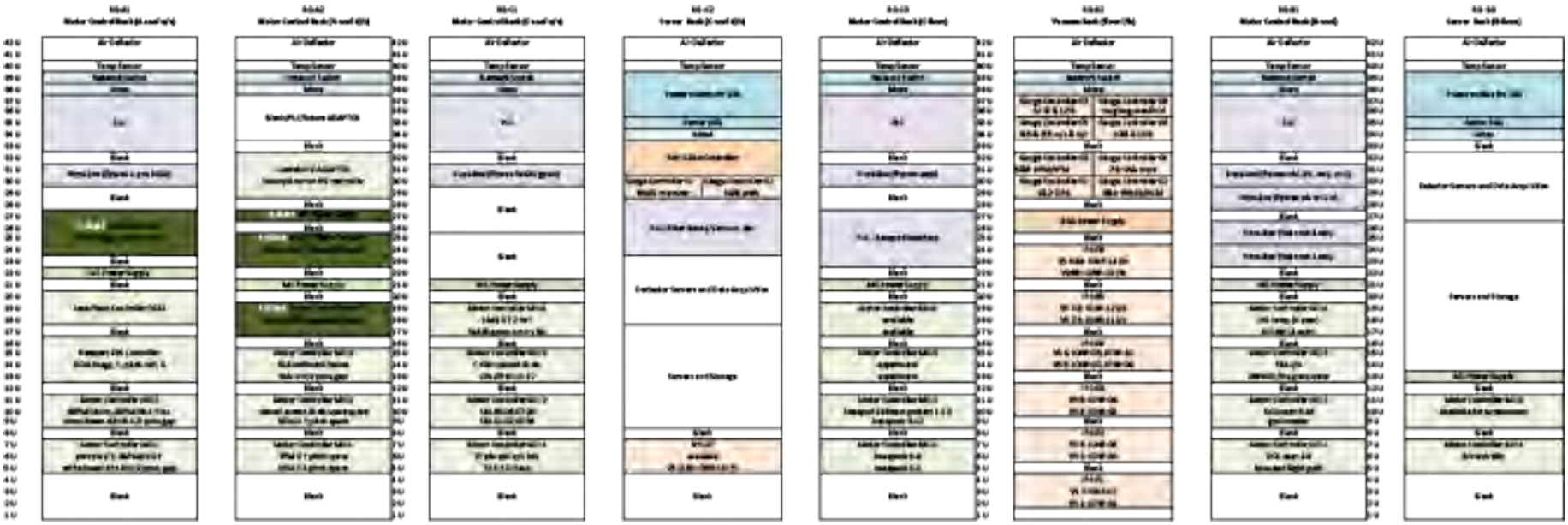

- Available for review if desired. Space is available for outboard branch upgrade.
- Vacuum controllers being loaded into racks, ~ 8 April 15
- Techs preparing for cable pulling in FOE
- Spreadsheet of controls channels in progress
- EPS and PPS requirements being collected on per package basis
- Data acquisition, server configuration, detector workstations design not started

Review Charge and Agenda

- *Overview Talk*
  - *Scientific program objectives*
  - *Performance expectations*
  - *Design maturity / planned procurements*
  - *Design effort*
- GISAXS Endstation
  - Fabrication strategy
  - Major remaining technical design risks
  - Interfaces, ES&H/QA, Instrument Readiness
- Liquids Endstation
  - Fabrication strategy
  - Major remaining technical design risks
  - Interfaces, ES&H/QA, Instrument Readiness
- Critical Issues

SMI GISAXS Endstation

- GISAXS Endstation
  - Fabrication strategy
  - Major remaining technical design risks
  - Interfaces, ES&H/QA, Instrument Readiness

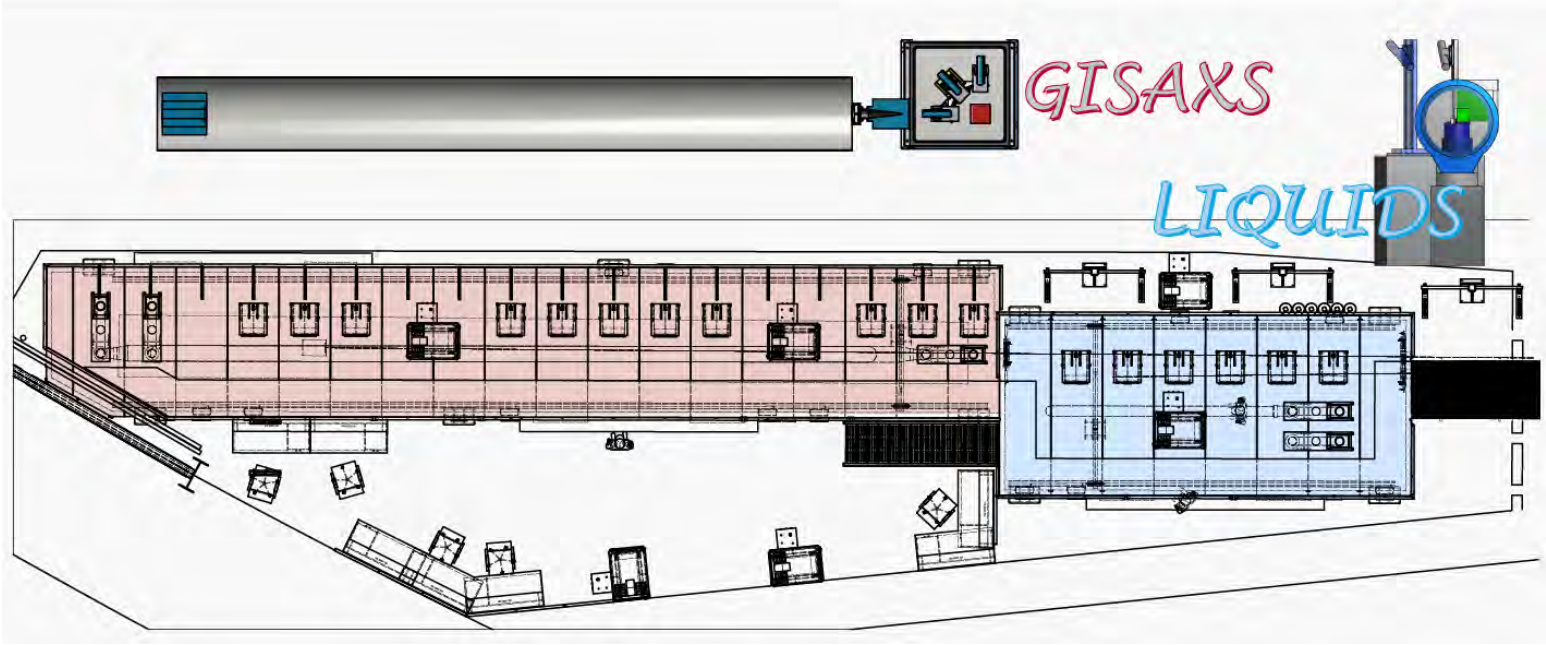

GISAXS/WAXS Sample Degrees of Freedom

- Large positioner:
  - Bring the supported assembly into position in the microbeam
  - Tilt rotation axis up to 15° within the reflection plane for azimuthal scans
  - Support large sample environments that have their own degrees of freedom
- Rotation stage: specs based on beam divergence, beam size. Endless 360°
- Small positioner: 6DOF for microbeam and low divergence applications
- Integrated to correctly assess, track and (if possible) eliminate the sphere of confusion

Proposal evaluation is partially complete.

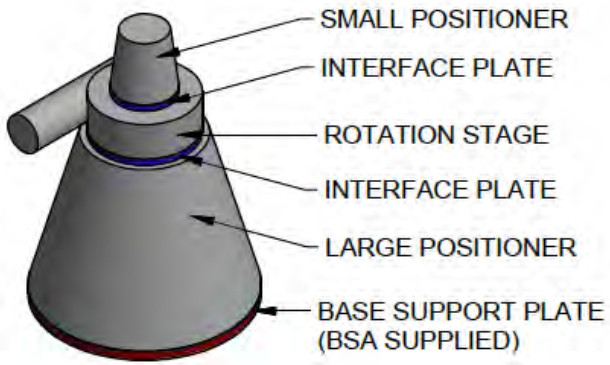

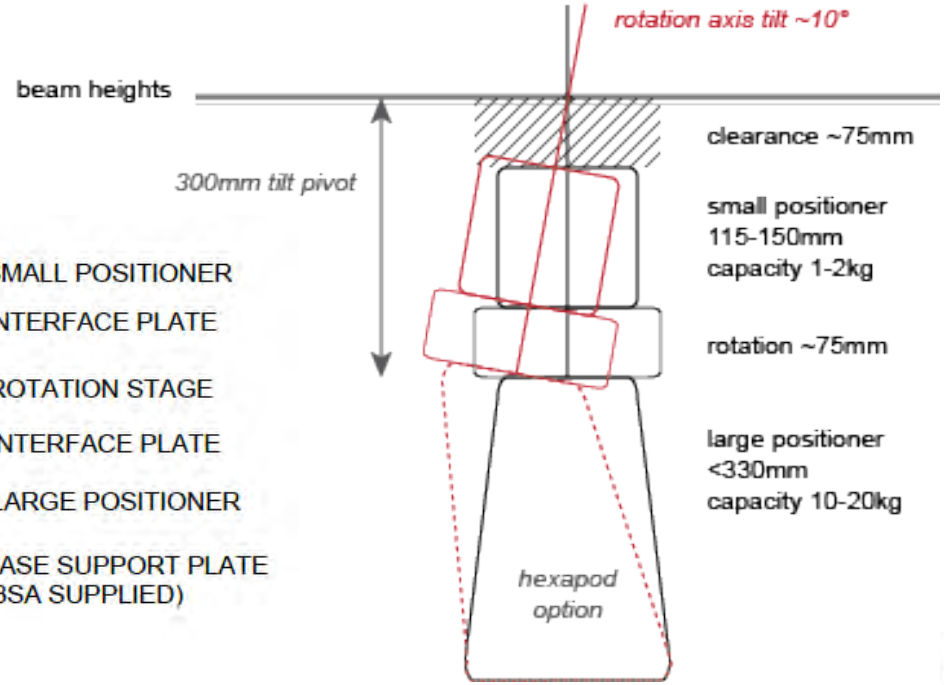

GISAXS/WAXS Sample Stages

- Commercial Stages satisfy most of our desired specifications, including through-holes.
- Specs on run-out for large travel will probably exceed 2 µm, and be taken into account as we design our experiments.
- Specs for the large tilt will be enhanced with a precision wedge stage (in procurement)
- A Precision Plate Stack will make up heights for different samples and allow reproducible positioning (in procurement)

Critical.

Programming access and effort.

Equivalent performance in air and vacuum, entire range to 10^{-7} torr.

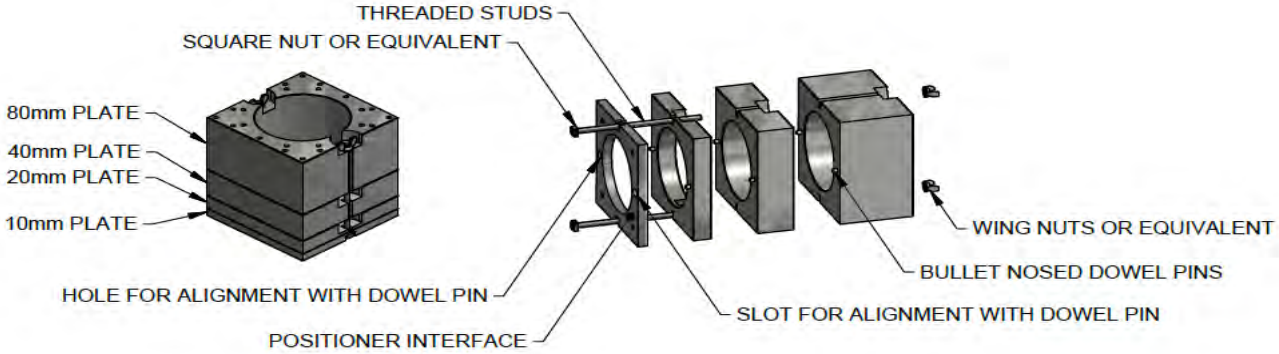

GIWAXS Detector and Goniometer

- Pilatus 100K-W with similar specs to the 1M. Native in-vacuum detector.
- Water lines will be enclosed by air hoses to avoid water/vacuum interface.
- Sample-detector distance 300mm with vertical acceptance angle 44.5°
- In-plane q-range achieved by 90° arc stage (next slide)

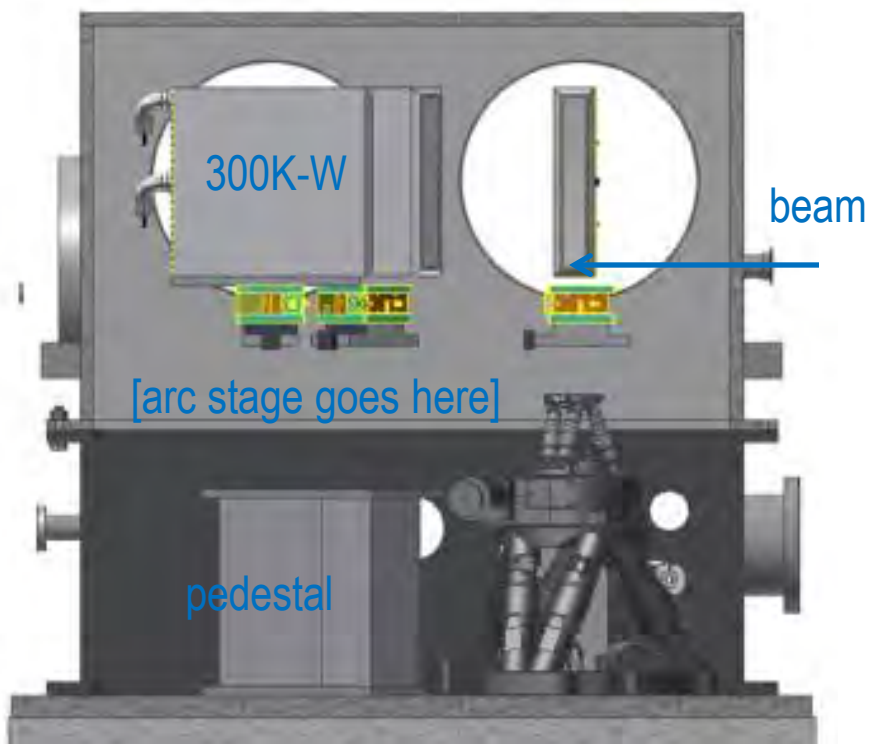

In-house design required for detector support brackets.

Horizontal and vertical motorized stages desired, but may be left to an upgrade.

The detector's sensors need protection from "dirty" samples and damage.

In-house design required for a flip-up beam blocker triggered by roll-over switch in EPS.

GIWAXS Goniometer Details

- Supplied by Huber: ordered, need to finalize some small details.
- Specs derived from beam divergence, detector pixel size, fly-scan requirements. The stage meets or exceed all specs.

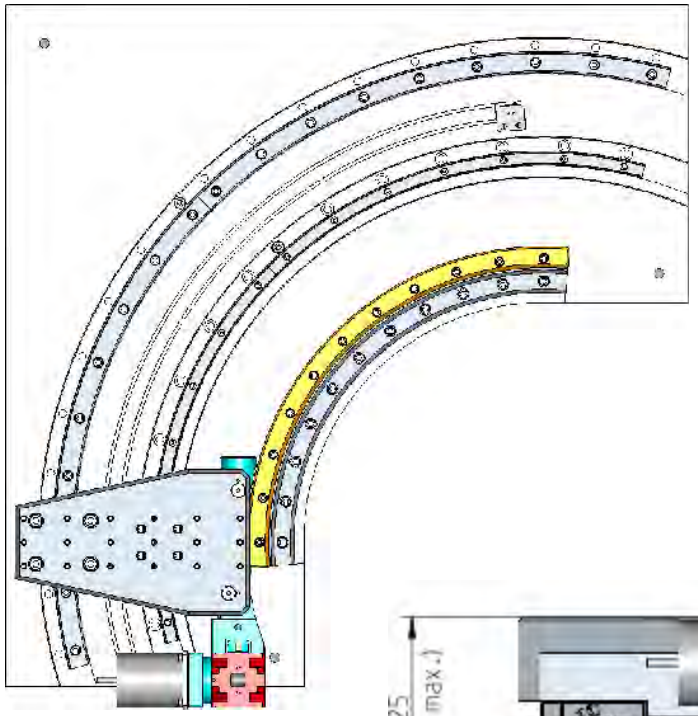

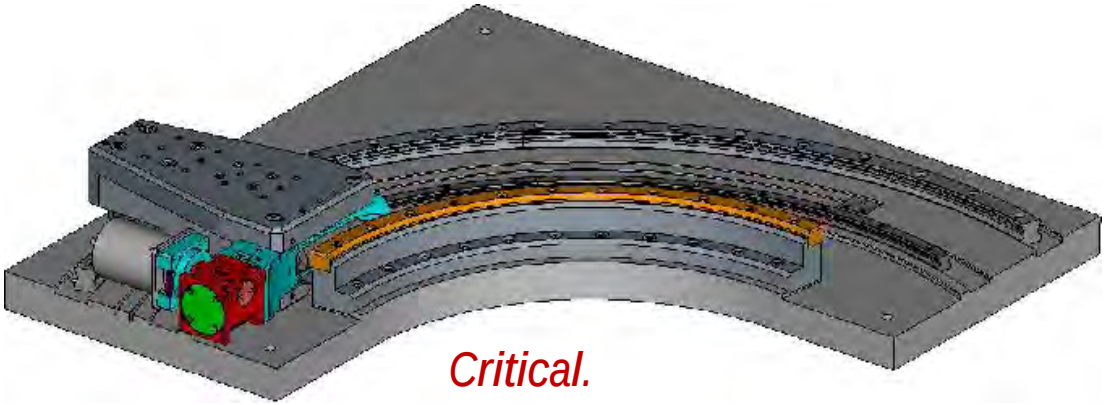

Critical.

Fiducialization and alignment.

GIWAXS Sample Vacuum Chamber

- Supplied by GNB, FDR 10 Apr 15. Granite stand being procured separately.
- Performance to 10^{-7} torr, though may often be run at 10^{-3} torr depending on samples.
- Chamber separates into sections for installation, connected with o-ring seals.
- Chamber has a simple access door with latches for main use in experiments.

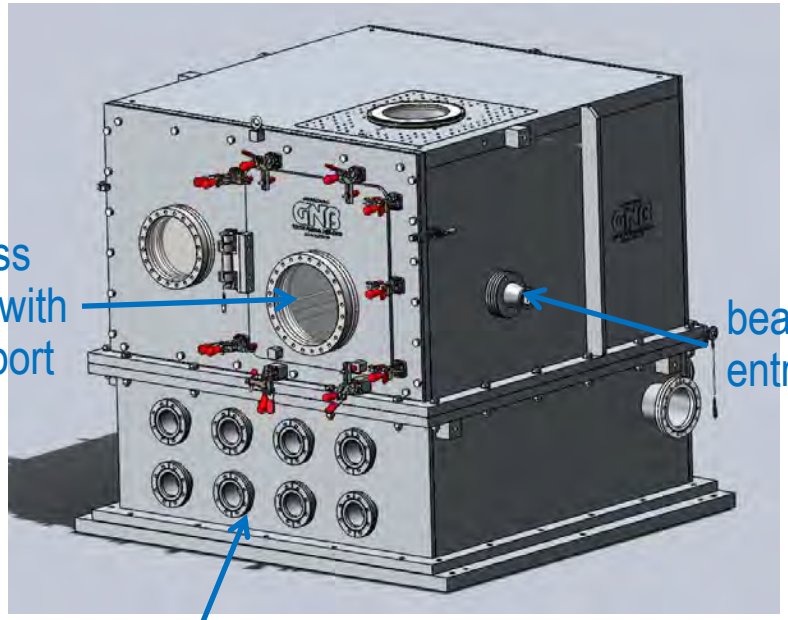

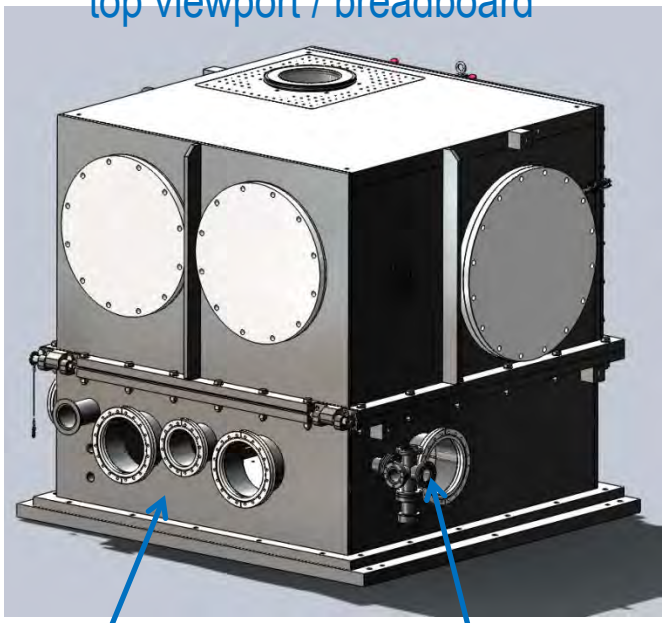

GIWAXS Sample Vacuum Chamber Components

- Constructed in separate portions with lift provisions and vendor FEA for vacuum and lift.
- Critical spec: deflection of bottom plate and top plate not to exceed 0.020” (0.5mm)

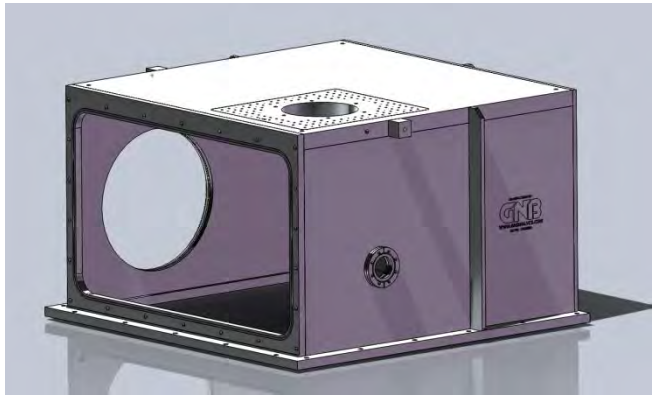

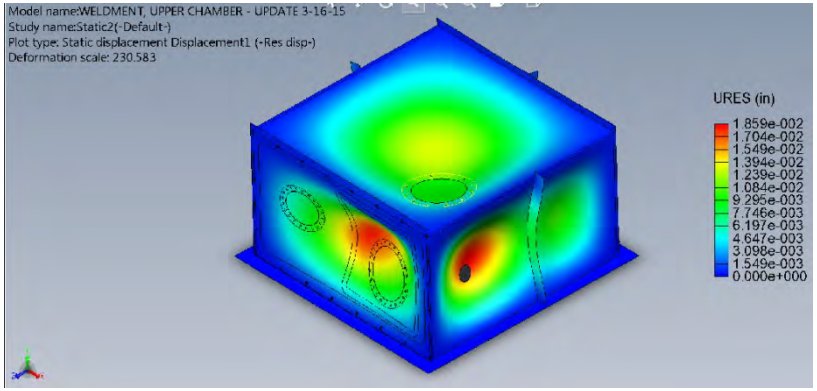

front plate with access door is removable for installation

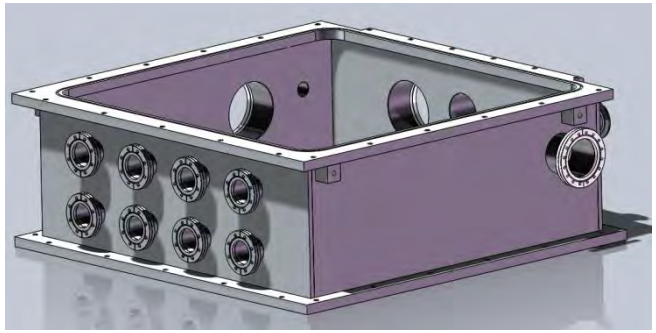

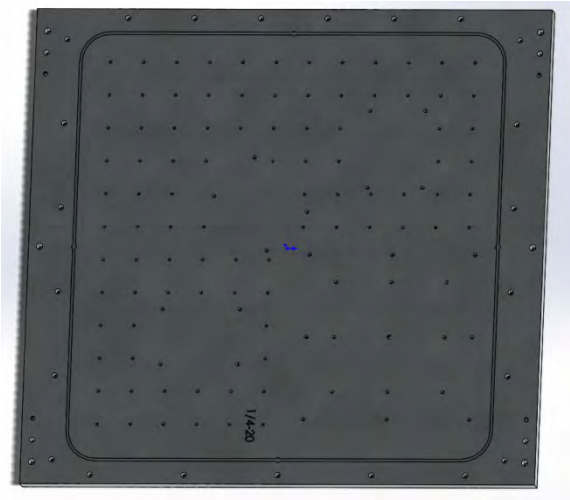

bottom plate features:
- fiducials
- user breadboard
- stage mount pts
- lift points

GIWAXS Sample Vacuum Chamber Clamshell Lift

- If it is desired to place large apparatus without the chamber encumbrance, the chamber has a hinged clam-shell design that can be opened with the manual hoist.
- Internal safety review took place 7 Apr 15, prior to GNB FDR review 10 Apr 15. BNL Rigging and Crane Safety attended the FDR and helped to develop the list plan.
- GNB provides a custom spreader bar and makes lift demo part of FAT.

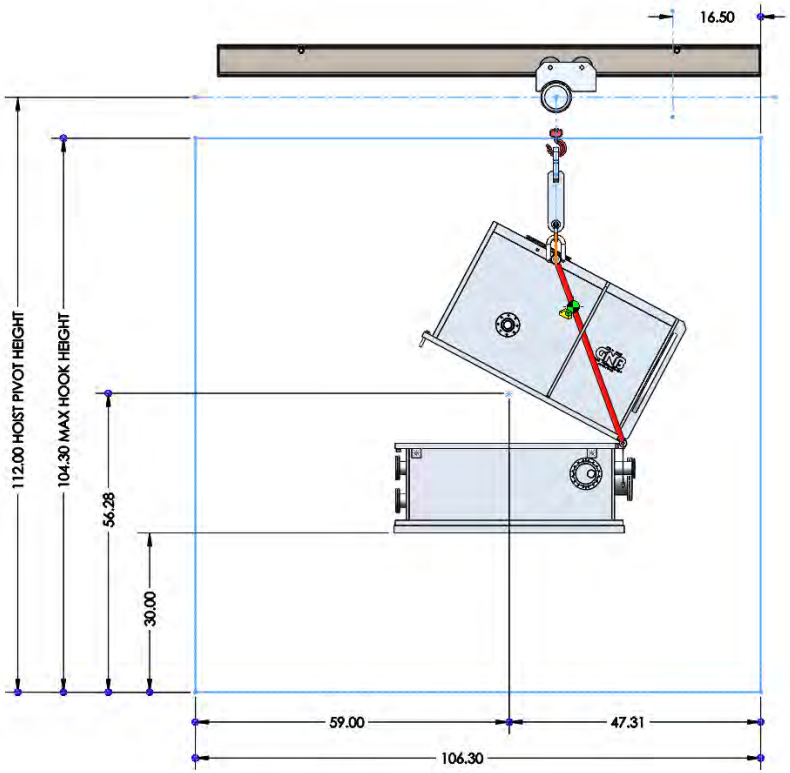

SMI is considering to install a manual gear trolley in place of the current trolley.

Trolley motion along the beam to direct the chamber opening/closing would be controlled by a second operator with the traveler chain.

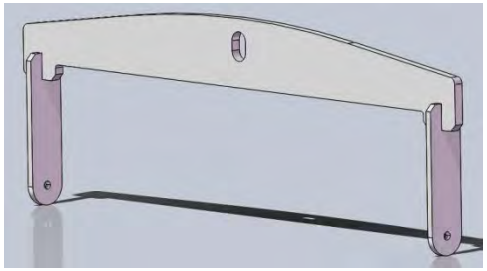

Spreader bar rated to capacity of hoist could be used for other applications.

GIWAXS Sample Vacuum Chamber Current Model

- Granite is wider than the chamber, to support Partner-supplied WAXS detector (not in NEXT scope and thus not detailed in this review)
- Note that a stand will be provided to support open chamber and lock open.

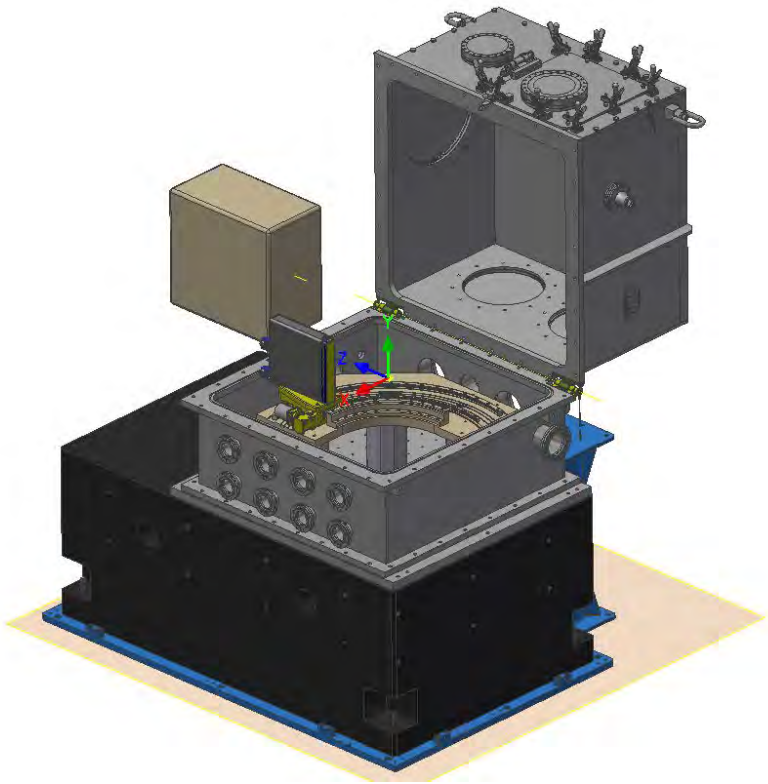

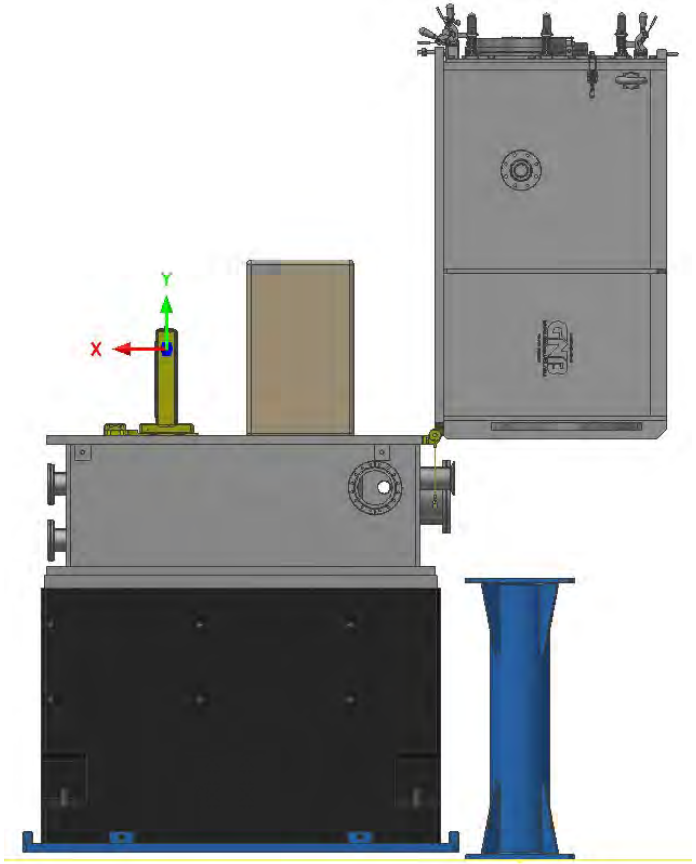

SMI SAXS Detector: Pilatus3 X-Series Custom

- Half-in-vacuum design for windowless beamline, traveling within SAXS tube
- Calibrated to 2.1 keV; 320µm thick sensors
- Requires a half-vacuum chamber within the SAXS tube to bring out air and water cooling lines
- Will be supplied with a vacuum cap for bench test
- Final design drawings received from Dectris Apr. 15

Critical. Internal water/vacuum connection to be approved.

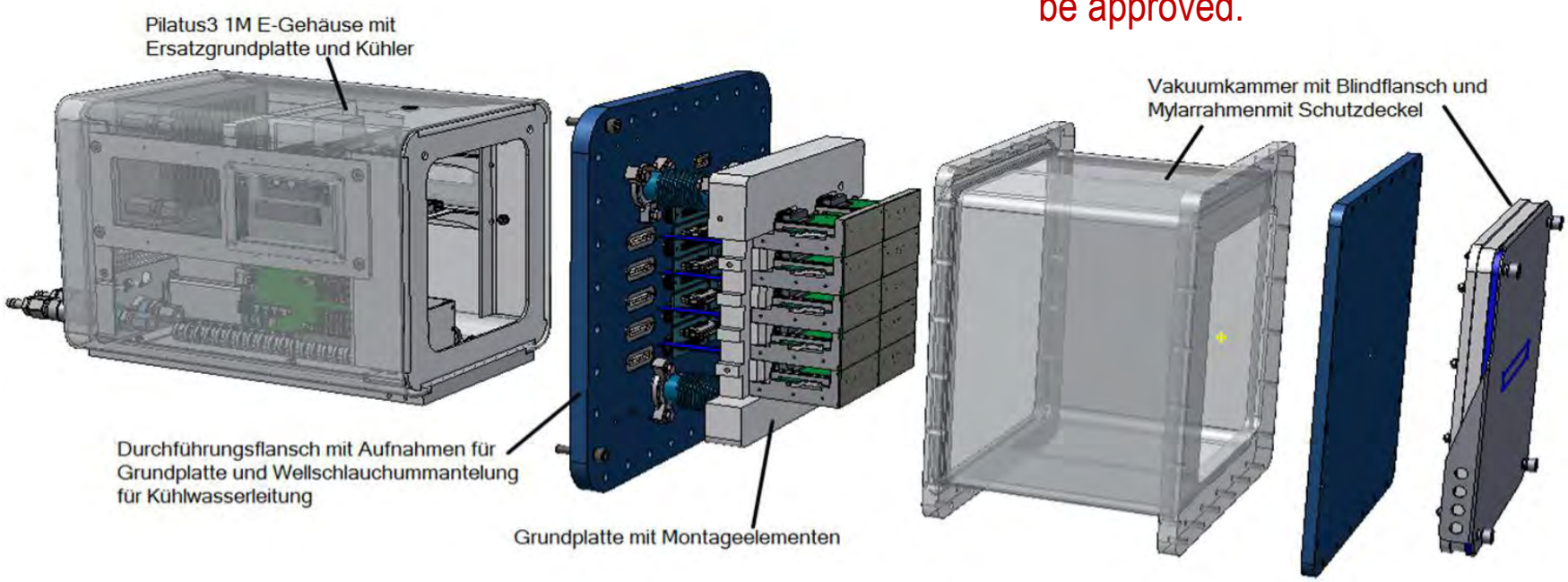

SMI SAXS Detector: Pilatus3 X-Series Custom

- Half-in-vacuum design for windowless beamline, traveling within SAXS tube
- Calibrated to 2.1 keV; 360µm thick sensors
- Requires a half-vacuum chamber within the SAXS tube to bring out air and water cooling lines
- Will be supplied with a vacuum cap for bench test
- Final design drawings received from Dectris Apr. 15

Critical. Internal water/vacuum connection to be approved.

SMI SAXS Detector "Vacuum-Outside" Chamber

- Back end of 1M will be contained in an Aluminum vacuum tight chamber with feedthroughs.
- Detail design 35% complete: includes o-ring seal, lengths, connectors, feedthroughs, water/air connections, sealing surfaces, assembly/ lifting, alignment, interior ribbing, exterior lift eyes, provision for safety cover.
- Goal: complete and order this < $25K chamber by May/June 2015.
- The chamber will be supported on X/Y translation, all carried on Z rail *to be designed*
- Beam stop and protective cover assembly *to be designed*

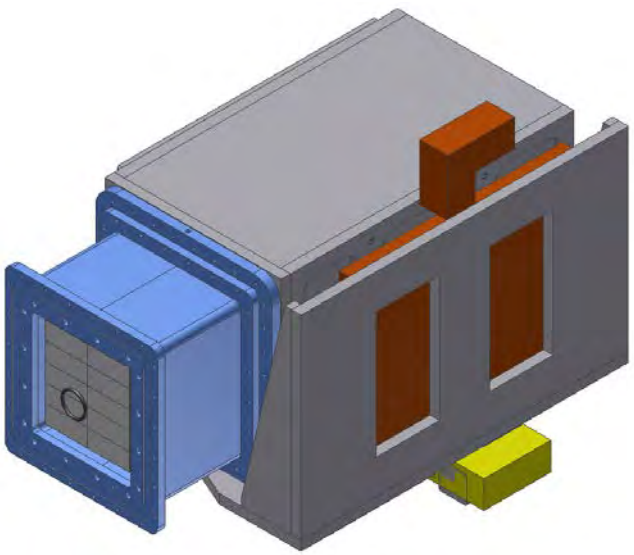

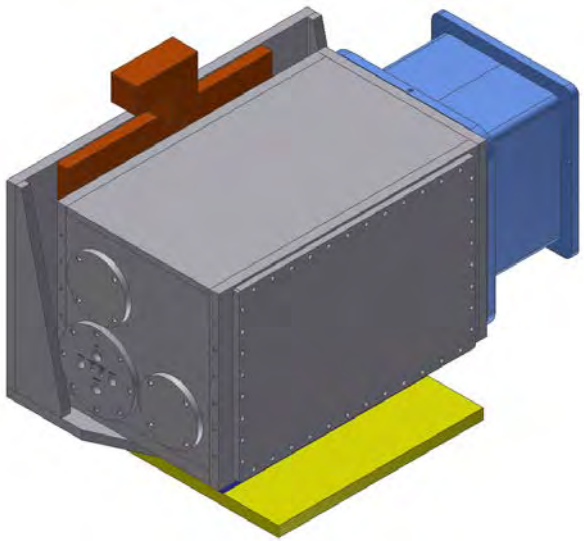

Critical.

(1) Protection of sensors against outgassing sample.

(2) Bleed-up procedure that protects the detector.

SMI SAXS Detector Z Rail Mechanism

- Rail system and Z drive system is supported on the floor, not the vacuum chamber.
- Motion will not be encoded. Design priority given to ease / integrity of assembly and alignment.
- In-house design scheduled for FY16.

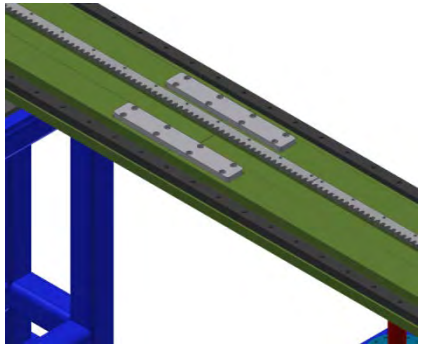

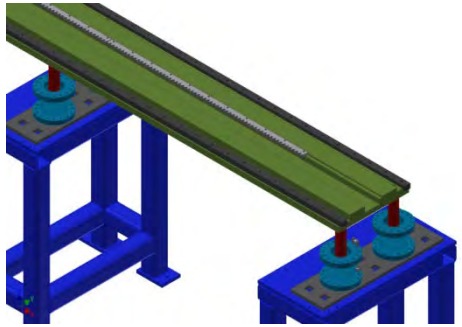

Critical.

Availability of engineering design resources.

Preliminary concepts are shown here.

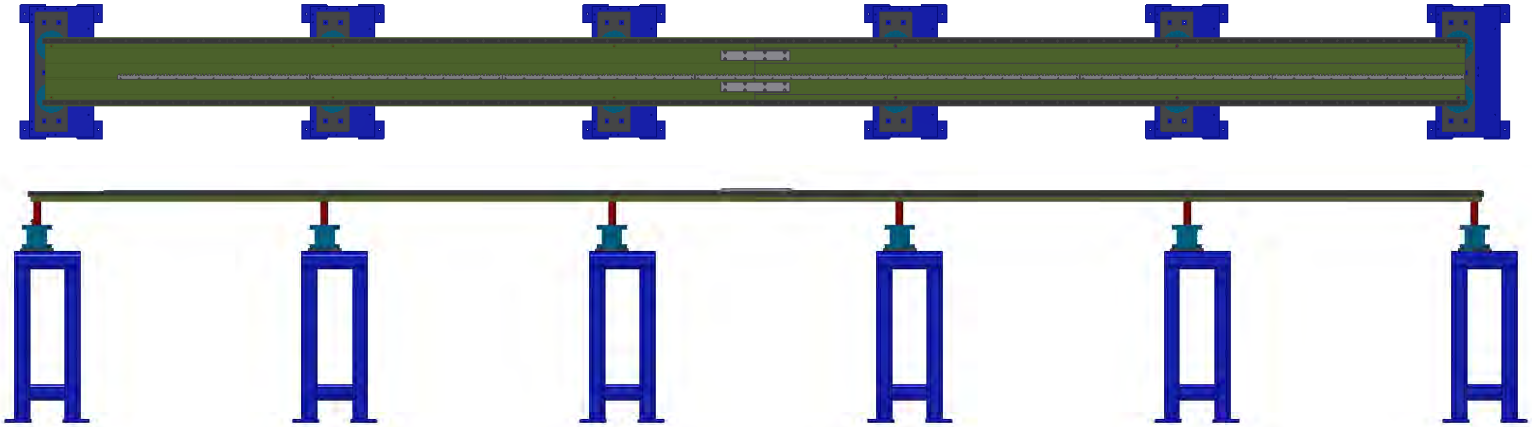

SMI SAXS Flight Tube Structure

- Separable chamber sections supported independently from Z rail (~1m OD, 8.1m long).
- Need to design for access and manage the cable drag chain with power, signals, water, and air.
- Important design detail is the access for bellows at rail feet, for assembly and placing Cu gasket.
- Specs for procurement of vacuum tube need to be complete mid summer 2015 or sooner.

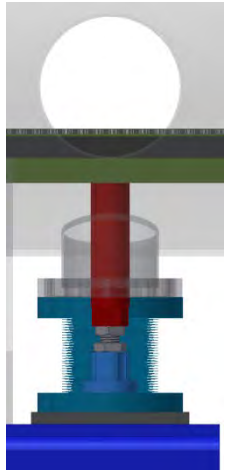

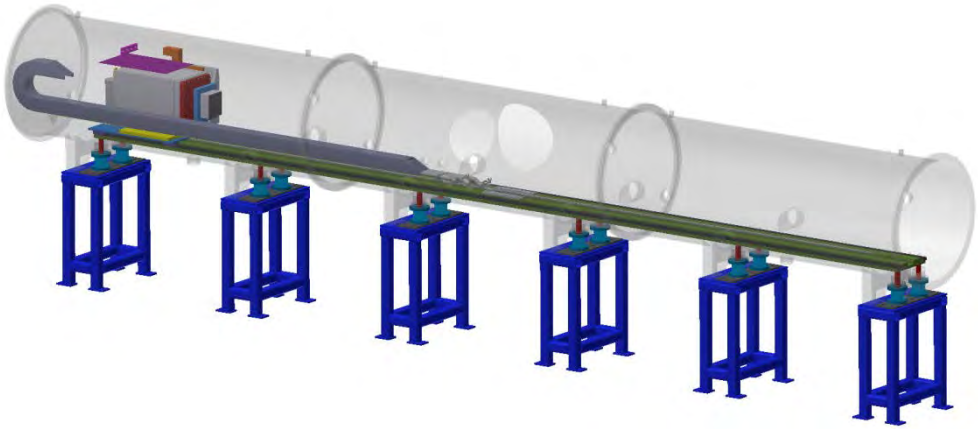

Critical.

Availability of engineering design resources.

Preliminary and working concepts are shown here.

SMI GISAXS Endstation: Risks and Readiness

- Major remaining technical design risks:
  - Stand to support and lock clamshell open, to be designed
  - SAXS tube/ table/ mechanics: requires design effort
  - SAXS tube/ table/ mechanics: requires timely procurement of tube sections
  - Beam stop mechanisms to be designed
  - Detector sensor protection mechanisms to be designed
  - Non-risky design items still to be completed: chamber granite, SAXS cone, SAXS connection flange, kapton windows if needed for commissioning / dirty experiments

- Interfaces, ES&H/QA, Instrument Readiness
  - Utilities interfaces for chamber / 300K-W are known well
  - Utilities interfaces for SAXS including cable drag chain are in progress
  - Need safety review for water/ air/ vacuum interfaces including fast valve layout
  - Chamber hoisting has been reviewed and needs to be signed / filed
  - Procedures and travelers for the components to be written, for IRR

Review Charge and Agenda

- *Overview Talk*
  - *Scientific program objectives*
  - *Performance expectations*
  - *Design maturity / planned procurements*
  - *Design effort*
- *GISAXS Endstation*
  - *Fabrication strategy*
  - *Major remaining technical design risks*
  - *Interfaces, ES&H/QA, Instrument Readiness*
- Liquids Endstation
  - Fabrication strategy
  - Major remaining technical design risks
  - Interfaces, ES&H/QA, Instrument Readiness
- Critical Issues

SMI Liquids Endstation

- Liquids Endstation
  - Fabrication strategy
  - Major remaining technical design risks
  - Interfaces, ES&H/QA, Instrument Readiness

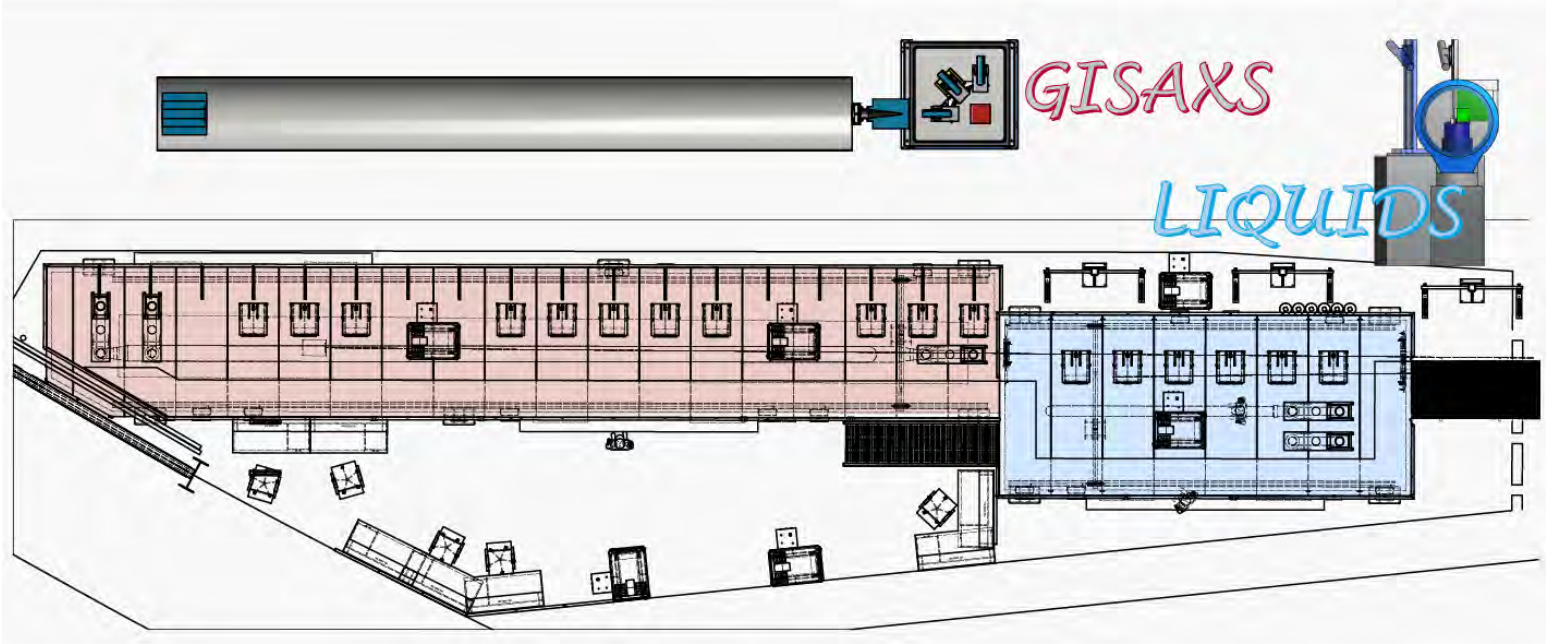

Spectrometer: Double Crystal Deflector

- Talking points:
  - Liquid spectrometers are usually built by teams of several people over 2-3 years on budget of $0.5M
  - SMI wants world leading performance but has about half these resources
  - Strategy: build the best *deflector stage* possible. Leave sample/ detector to upgrade.
- Still desirable to switch between single and double configurations, so design supports both
- Beam size: 125μm(h) × 90μm(v) to 50 × 50μm depending on the deflection angle.

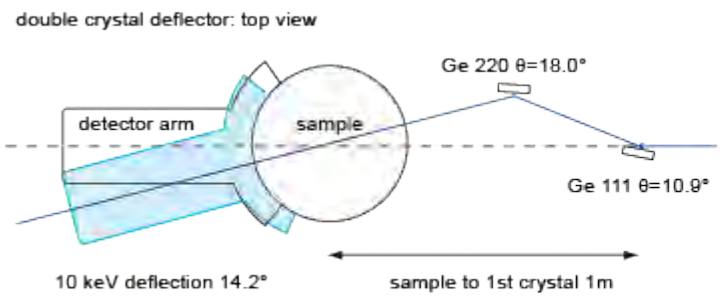

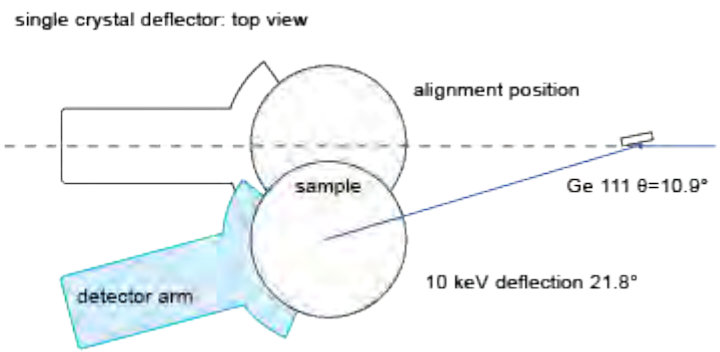

DCD:

$$\sin(\alpha) = \sin(2\theta_{220} - 2\theta_{111}) \times \sin(\chi)$$

SCD:

$$\sin(\alpha) = \sin(2\theta_{111}) \times \sin(\chi)$$

SMI DCD: World Leading Performance

- Inputs into the design:
  - Raytracing. Rotated beam footprint, intensity simulated for many conditions.
  - Mechanical. CAD was used to project beam displacements of misaligned instrument.
- Specification was developed for the 13 DOF instrument, RFP is out (*SMI critical path*).
- Biggest challenge, 0.35µm stability of crystals during chi rotation, requires air bearing stage.

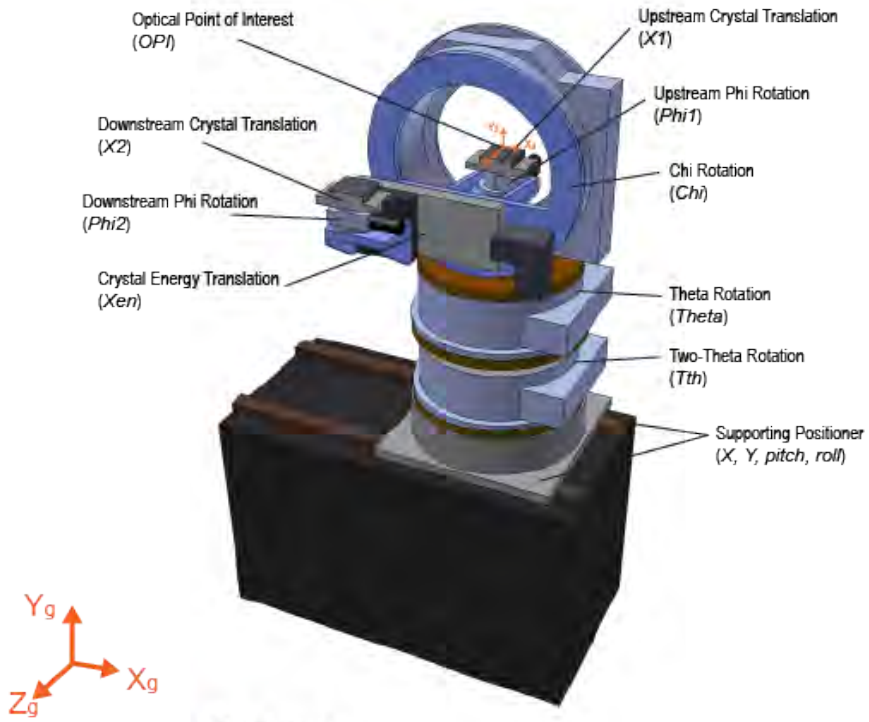

Goniometer Coordinate Orientations

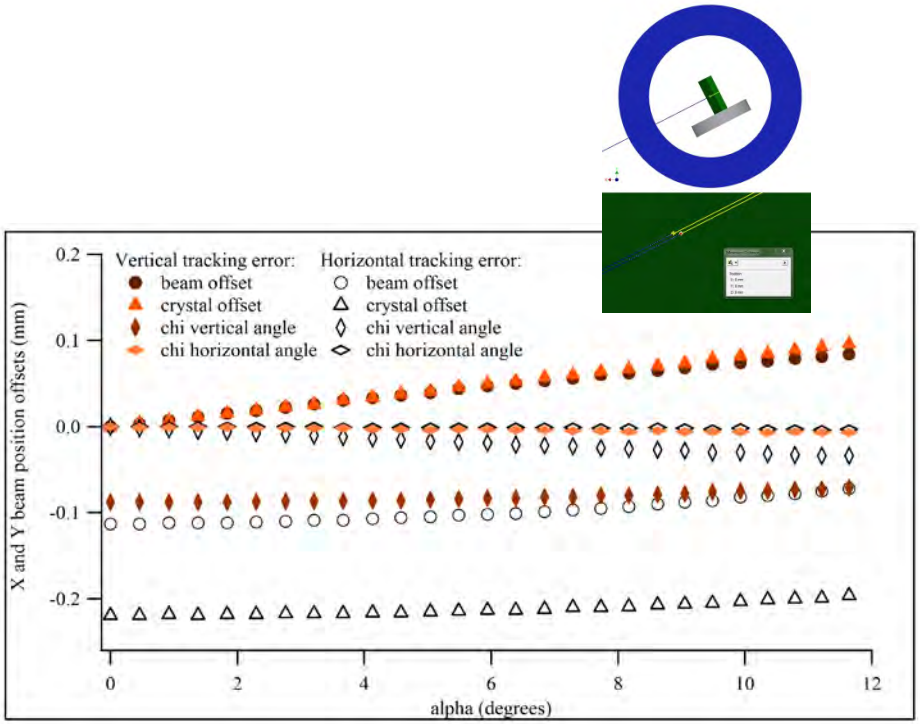

SMI DCD: World Leading Performance

- The long X positioner travel is required to insert/ retract DCD to/ from inboard beam
- Energy range of 6.5-24 keV, in-air operation in B hutch, determines stage travel / clearances.
- In future, outboard branch to be dedicated to Liquid Spectrometer.

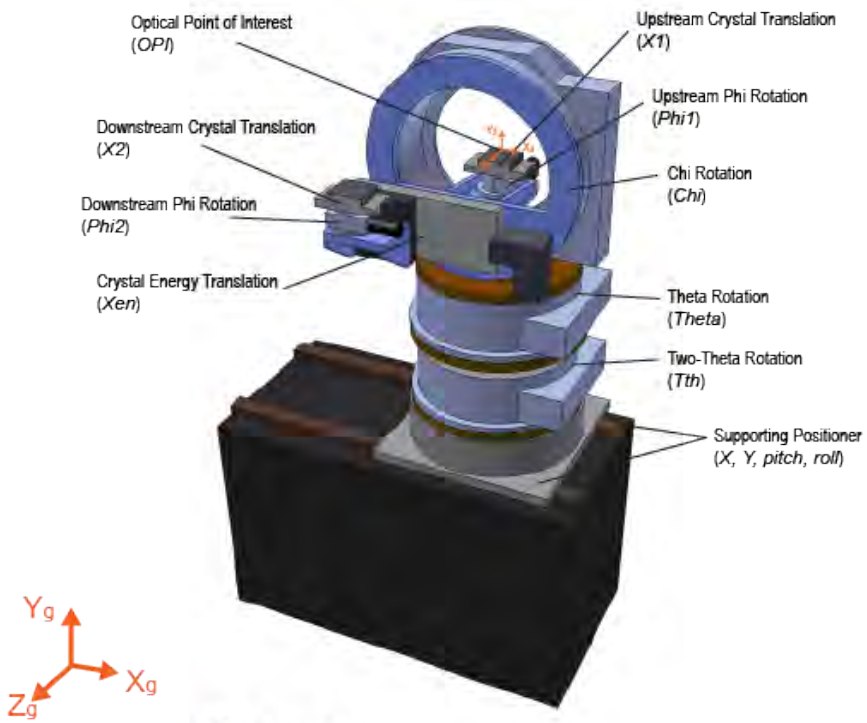

Goniometer Coordinate Orientations

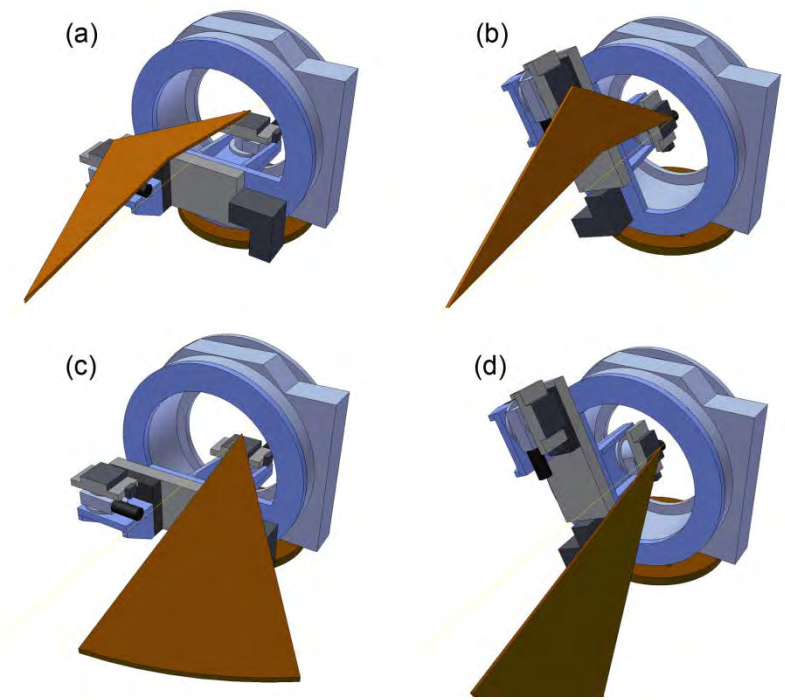

SMI Liquid Spectrometer: Sample/ Detector

- Flight paths may have to wait for Operations rather than being completed in NEXT Project.
- Sample / detector instrumentation will be transferred from NSLS Beamline X22B (the instruments shown below are already in storage at NSLS-II)
- In future, an upgrade could provide a granite slab / airpad design for the sample side.

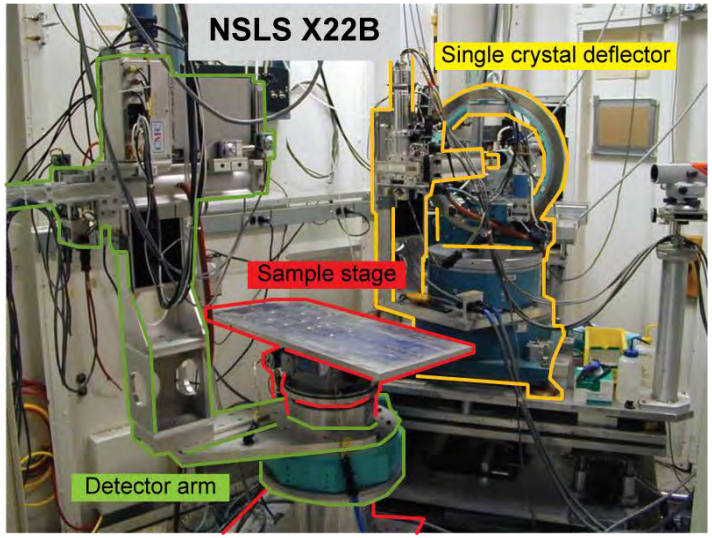

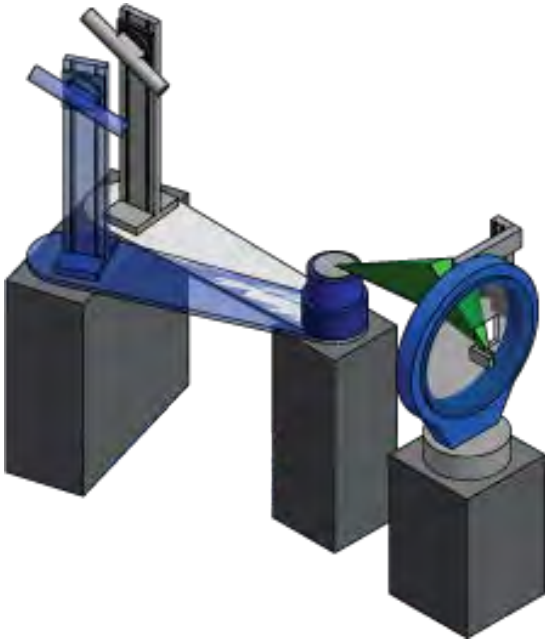

SMI Liquids: B Hutch Beamline Layout

- Beamline emerging from optics closet (mini hutch) terminates with Be window flange.
- Inboard/outboard positions and removable shielded beampipe concept are shown.
- Specification is underway for the removable pipe section.
- Specification needs to be done for the movable beam stop.

Critical.

- Beam stop design/ review
- PPS logic (underway)

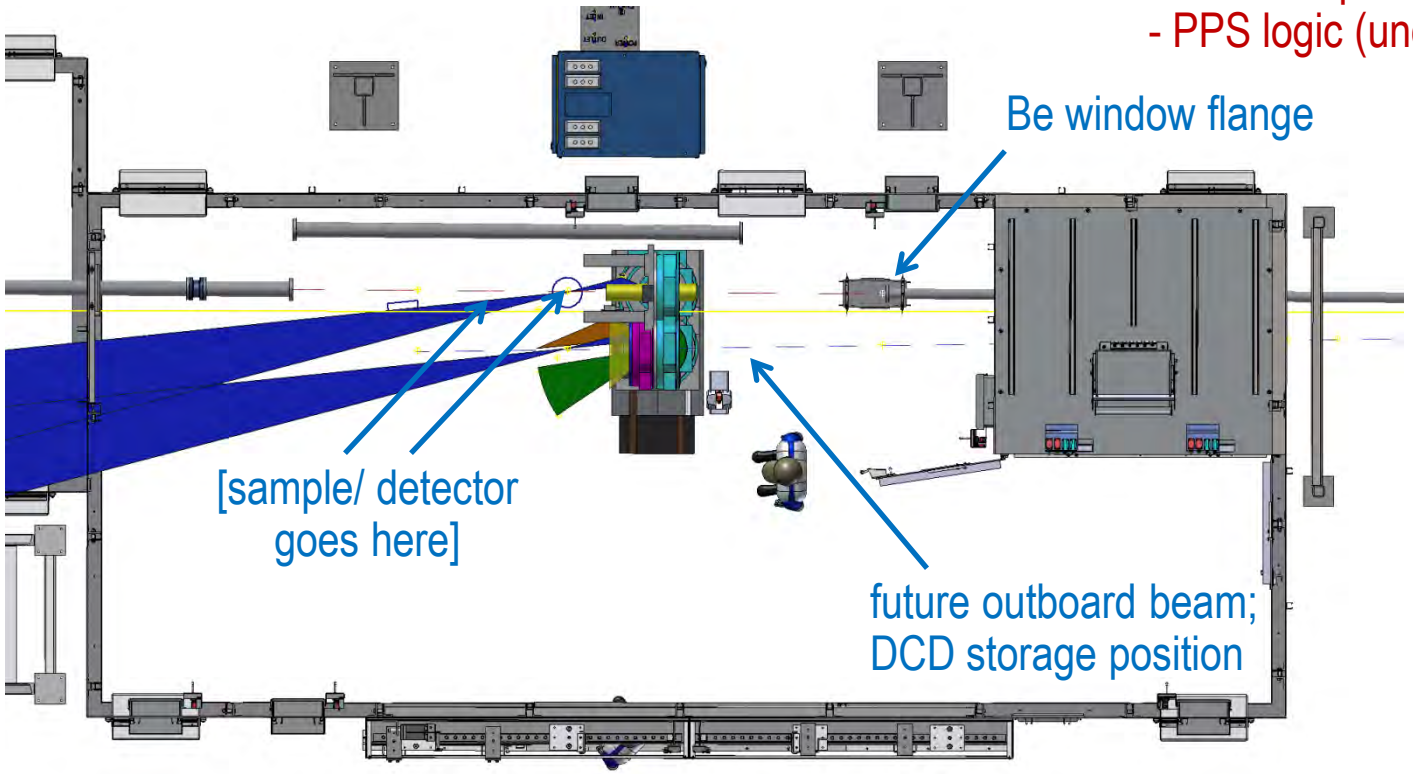

SMI Liquids: B Hutch Configurations

- Reason for removable shielded beam pipe: access to B while operating in C and vice versa.
- Beampipe insertion/ removal sensed in PPS with interlock switches, enabled with Kirk keys.

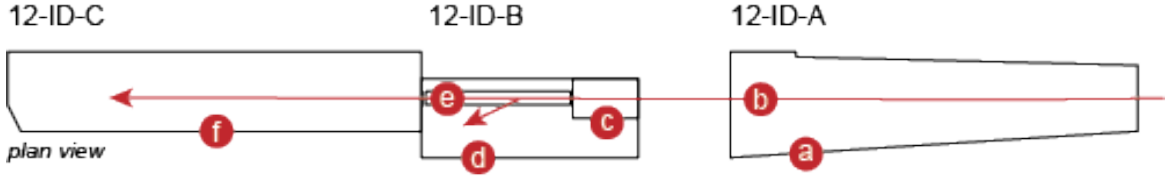

PPS conditions to enable 12-ID Front End Shutter.

	(a)	(b)	(c)	(d)	(e) *Note 1*		(f)	
	12-ID-A secured	*mono beam shutter*	*12-ID-B-1 secured*	*12-ID-B secured*	beam stop plate	*12-ID-B-2 pipe secured*	*12-ID-C secured*	***FE shutter***
	no	X	X	X		X	X	• disable
beam in A (FOE)	yes	closed	X	X		X	X	• enable
	yes	open	no	no		X	X	• disable
beam in B (Liquids)	yes	open	X	yes		no	X	• enable
	yes	open	yes	no		no	X	• disable
	yes	open	yes	no		yes	no	• disable
beam in C (Gi-SAXS)	yes	open	yes	no		yes	yes	• enable

Note 1: at (e), <u>either</u> pipe or beam stop can be secured but not both.

SMI Liquids: B Hutch Configurations

- Need physical design to: (1) move heavy pipe, (2) provide shielding at joints, (3) lock.
- Specification starting point: Cinel's design for beam support stands for LIX beamline.

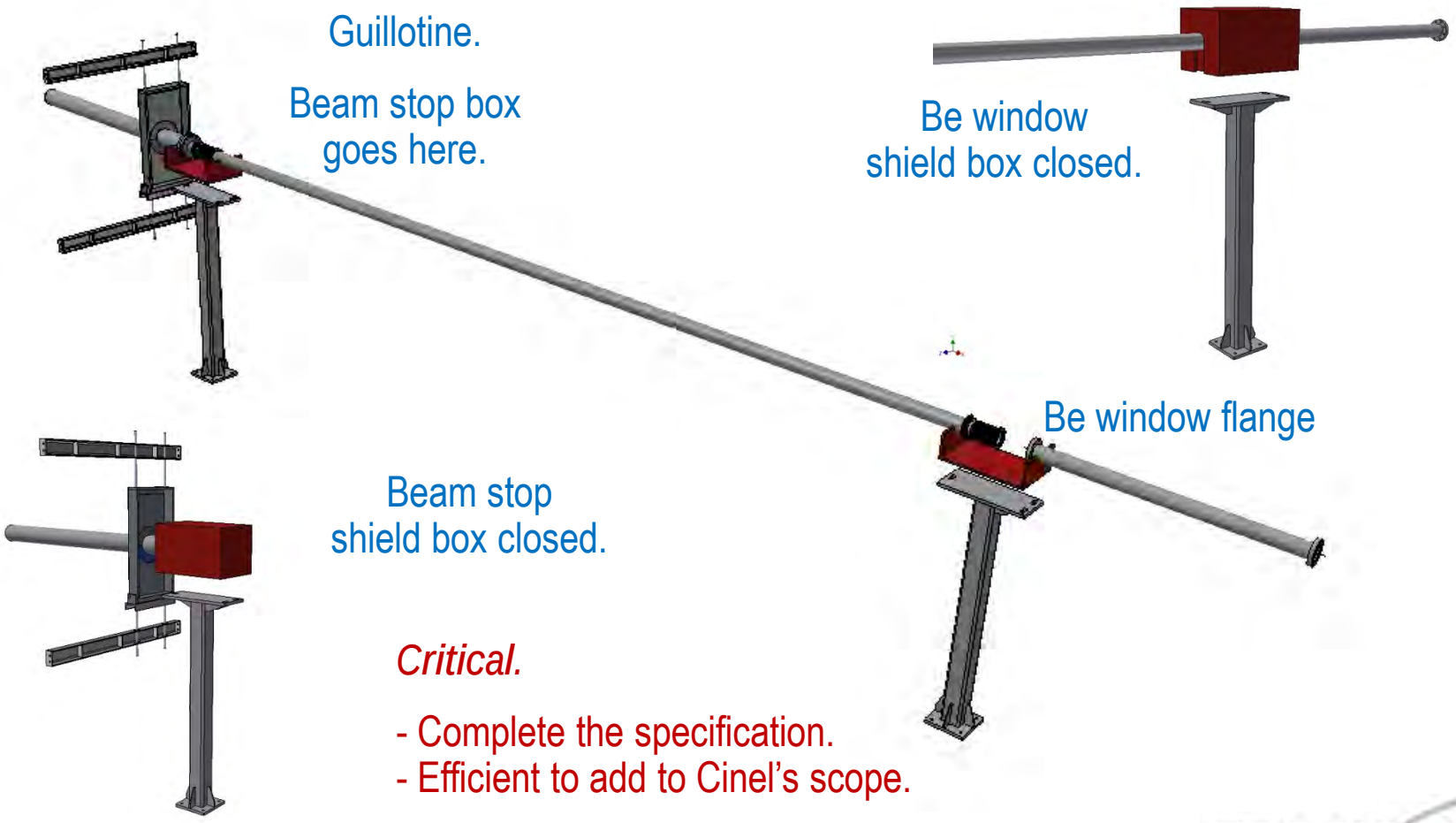

Critical.

- Complete the specification.
- Efficient to add to Cinel's scope.

SMI Liquids: Movable Beam Pipe Plan

- Support pipe against sagging, and provide lift points, with a lightweight truss framework
- Support on wheeled truss structure in-place and also for storage
- Use hutch hoist to lift pipe structure off the wheeled base, and set down again on the wheeled base, either in or out of the shield boxes

Commercial moving light truss for theater/ stage and transit. Side ladders swing up and lock.

Costs $3000, weighs 215 lbs, 10' span.

Loading: uniform distribution 5470 lbs, center point load 2880 lbs.

Critical.

- Complete the specification.
- Determine the fabrication strategy.

SMI Liquids Endstation: Risks and Readiness

- Major remaining technical design risks:
  - Delivery of a high quality DCD with air bearing stage from excellent vendor
  - Interface mechanics of transferred NSLS components to be designed
  - Movable pipe design/ review
  - Beam stop design/ review
  - PPS logic completion

- Interfaces, ES&H/QA, Instrument Readiness
  - No utilities interfaces for these instruments
  - Hoist procedure for pipe needs to be written and approved
  - Bleed-up procedure and the rest of B/C hutch vacuum layout need to be filled in
  - Procedures and travelers for the components to be written, for IRR

Review Charge and Agenda

- *Overview Talk*
  - *Scientific program objectives*
  - *Performance expectations*
  - *Design maturity / planned procurements*
  - *Design effort*
- *GISAXS Endstation*
  - *Fabrication strategy*
  - *Major remaining technical design risks*
  - *Interfaces, ES&H/QA, Instrument Readiness*
- *Liquids Endstation*
  - *Fabrication strategy*
  - *Major remaining technical design risks*
  - *Interfaces, ES&H/QA, Instrument Readiness*
- Critical Issues

SMI GISAXS Endstation: Risks and Readiness

- Major remaining technical design risks:
  - Stand to support and lock clamshell open, to be designed
  - SAXS tube/ table/ mechanics: requires design effort
  - SAXS tube/ table/ mechanics: requires timely procurement of tube sections
  - Beam stop mechanisms to be designed
  - Detector sensor protection mechanisms to be designed
  - Non-risky design items still to be completed: chamber granite, SAXS cone, SAXS connection flange, kapton windows if needed for commissioning / dirty experiments

- Interfaces, ES&H/QA, Instrument Readiness
  - Utilities interfaces for chamber / 300K-W are known well
  - Utilities interfaces for SAXS including cable drag chain are in progress
  - Need safety review for water/ air/ vacuum interfaces including fast valve layout
  - Chamber hoisting has been reviewed and needs to be signed / filed
  - Procedures and travelers for the components to be written, for IRR