The only official copy of this document is the one online in the SharePoint Document Center. Before using a printed copy, verify that it is current by checking the printed document's version history log (p. ii) with that of the online version.

National Synchrotron Light Source II, Brookhaven National Laboratory			
Doc No. PS-C-XFD-PRC-052	Author: S. LaMarra	Effective Date: 05Feb2016 Review Frequency: 3 yrs	Version 1
Title: NSLS-II Beamline Cryocooler Operations – Research Instruments			Technical

Reviewed by:

2/5/2016

X Andrew Ackerman

Andrew Ackerman
Deputy ESH Manager
Signed by: Ackerman, Andrew

2/3/2016

X

Steve Moss
Acting Conduct of Operations Manager
Signed by: Moss, Steven H

2/2/2016

X

Bruce Lein
Training Group Leader
Signed by: Lein, Bruce

2/3/2016

X

Chris Porretto
Quality Assurance Manager
Signed by: Porretto, Christopher J

2/3/2016

X

Robert Lee
ESH Manager
Signed by: Lee, Robert J

2/10/2016

X

Michael Buckley
RO Support Group Leader
Signed by: Buckley, Michael

2/3/2016

X

Michael Gaffney
BNL Safety Engineer
Signed by: Gaffney, Michael

2/3/2016

X

Dieter Schneider
AMX Lead Beamline Scientist
Signed by: Schneider, Dieter

2/2/2016

X

Martin Fuchs
FMX Lead Beamline Scientist
Signed by: Fuchs, Martin

USI Screening/Resolution

2/3/2016

X

Steve Moss
Authorization Basis Manager
Signed by: Moss, Steven H

Procedure Validation*

2/3/2016

X

Steve LaMarra
Scientific Associate
Signed by: LaMarra, Steven

*for Operations/Technical procedures only

Approved by:

2/24/2016

X

Paul Zschack
Photon Science Division Director
Signed by: Zschack, Paul

VERSION HISTORY LOG

VERSION	DESCRIPTION	DATE
1	First Issue.	05Feb2016

ACRONYMS

ESH	Environment, Safety and Health	PPE	Personal Protective Equipment
LN_2	Liquid Nitrogen	RI	Research Instruments
NSLS–II	National Synchrotron Light Source II	SBMS	Standards Based Management System
ODH	Oxygen Deficiency Hazard		

1 PURPOSE AND SCOPE

The purpose of this procedure is to set forth the requirements for operation of the RI Beamline Cryocooler. The scope of this procedure includes the following:

- System Startup (Pre-operations)
- System Operation
- System Shutdown
- Troubleshooting (in automated modes)
- Emergency Shutdown and Restart

This procedure does not apply to the Bruker-ASC Cryocooler, the FMB Oxford Cryocooler or the Suzuki Shokan Cryocooler, which are operated in accordance with PS-C-XFD-PRC-012, *NSLS-II Beamline Cryocooler Operations – Bruker-ASC*, PS-C-XFD-PRC-011, *NSLS-II Beamline Cryocooler Operations – FMB Oxford* and PS-C-XFD-PRC-034, *NSLS-II Beamline Cryocooler Operations – Suzuki Shokan*.

This procedure also does not apply to troubleshooting and repair that includes "hardware hacking" (e.g., breaking hoses, venting, etc.). Troubleshooting and repair beyond the automated modes shall be performed by System Experts and/or RI Staff, and shall be planned in accordance with PS-ESH-PRM-1.3.6, *Work Planning and Control Procedure*.

This procedure is performed in accordance with the *Research Instruments GmbH, Cryocooler Installation and Operation Manual* (referred to herein as the *RI User Manual*), which is included as Attachment A.

2 DEFINITIONS

None.

3 RESPONSIBILITIES

3.1 Authorized Beamline Staff

3.1.1 Perform system startup, operation, shutdown, and emergency shutdown of the RI Cryocooler in accordance with this procedure.

3.1.2 Perform troubleshooting of the RI Cryocooler within the limitations of this procedure.

3.2 System Experts and RI Staff

3.2.1 Perform troubleshooting and repair for the RI Cryocooler as needed.

3.3 ESH Manager and Photon Division Director

3.3.1 Permit restart of the cryocooler system after the system has been stopped using the Emergency Stop feature for an emergency.

4 PREREQUISITES

4.1 Authorized Beamline Staff have read the *RI User Manual* (Attachment A) and are familiar with the following:

- Location of the emergency stop button
- Warnings and Alarms
- Overview schematic
- Location and description of valves and temperature sensors

4.2 The compressed air supply that is used to operate the control valves on the cryocooler is properly connected and operating.

4.3 The nitrogen gas supply (i.e., site supplied, compressed gas cylinder or Dewar) is properly connected and operating.

4.4 All pressure relief valves and exhaust venting valves are free of ice.

4.5 The high pressure lines to the beamline optical chamber are properly connected in accordance with the *RI User Manual* (Attachment A)

Note: Portable Dewar(s) may be used in lieu of the NSLS-II LN_2 System.

4.6 The fill lines are connected to an NSLS-II LN_2 supply drop OR a portable Dewar.

4.7 The fill line is equipped with a relief valve to prevent overpressure caused by trapped LN_2.

4.8 Authorized Beamline Staff have verified (in the following order) that the cryocooler may be safely started, specifically:

a. All LN_2 drops along the beamline are in a safe configuration as directed by the System Expert.

b. The LN_2 beamline supply valve may be safely opened and/or closed as directed by the System Expert.

c. The beamline optical component may be cooled AND the optical chamber is under vacuum.

4.9 The cryocooler is properly grounded.

4.10 The control system is properly connected (see Attachment A, Figure 7) to the cryocooler AND powered in accordance with section 3.3 (Connecting the Control System) of Attachment A, *RI User Manual*.

4.11 Authorized Beamline Staff have completed training for Cryogen Safety (HP-OSH-025) AND Compressed Gas Safety (TQ-COMPGAS1).

4.12 The system is in the proper configuration, as shown in Figures 2 and 3 of section 3.2.2 of Attachment A, *RI User Manual.*

5 PRECAUTIONS AND LIMITATIONS

5.1 Authorized Beamline Staff shall only operate and troubleshoot the system by the automated modes as described in this procedure. All troubleshooting and repair that includes "hardware hacking" (e.g., breaking hoses, venting, etc.) shall be performed by System Experts and/or RI Staff, and shall be planned in accordance with PS-ESH-PRM-1.3.6, *Work Planning and Control Procedure*.

5.2 Proper PPE, in accordance with the SBMS Subject Area, *Cryogenics Safety*, shall be worn to prevent personnel injury. Direct contact with LN_2 or exposed surfaces that are cooled by LN_2 may cause a burn. The required minimum PPE for handling cryogenic liquids include long pants, lab coat or apron, long sleeved shirt, eye protection, and insulated gloves.

5.3 System over pressurization caused by the expansion of nitrogen gas and pressure build-up is possible. All LN_2 lines that can be closed at both ends shall have a relief valve to prevent over pressurization.

5.4 If the system is not functioning in accordance with this procedure or the *RI User Manual* (Attachment A), the System Expert shall be notified.

5.5 Standing in or near nitrogen gas vapor clouds may cause hypothermia. Personnel shall take precautions to avoid standing in or near vapor clouds.

5.6 The system may become hot during operation and cause burns. Personnel shall avoid hot surfaces and take precautions, including the use of signs or barricades as necessary, to prevent injury.

5.7 Purge gas shall be <u>high purity</u> gaseous nitrogen from one of the following:

- Site-supplied gaseous nitrogen (preferred if available)

  <u>OR</u>

- A compressed gas cylinder of 99.999% purity nitrogen

  <u>OR</u>

- The gas output (boil-off) of an LN_2 Dewar

5.8 The purge gas system shall be pressure regulated below the cryocooler manufacturer's set point <u>OR</u> a pressure relief valve shall be used to prevent over pressurization.

5.9 The cryocooler shall be positioned and set up such that it is protected from incidental damage from equipment and personnel in the area. If the cryocooler is on wheels, the wheels shall be locked or chocked, or equivalent.

5.10 A large amount of nitrogen exhaust gas will be generated during cool-down. The nitrogen exhaust gas shall be ducted to a safe location to avoid risk of asphyxiation from the accumulated gas.

5.11 All cryocooler alarms that occur during normal cryocooler operations shall be immediately acted upon. False alarms from the cryocooler are not expected during normal operations.

5.12 Personnel shall follow the requirements of PS-C-XFD-PRC-006, *Beamline Enclosures and Cryogen Fill Station ODH Monitoring System Alarm Response Procedure* for response to all alarms related to the PureAire Air Check O_2 Oxygen Deficiency Monitors.

5.13 Only Authorized Beamline Staff and System Experts shall be inside the hutch during any of the steps of System Startup (purge, cool-down and fill), and the hutch door shall remain open. The opening to the hutch shall be posted indicating that no personnel are permitted and that purge/cool-down/fill is in progress. Once System Start-up (purge, cool-down and fill) is complete and the system is in routine operation, the entry door may be closed and personnel may enter the hutch; however, personnel are never permitted to be inside the hutch with the door closed.

5.14 Warm-up shall be performed prior to each time the beamline optic is accessed.

6 PROCEDURE

6.1 System Startup (Pre-Operations)

6.1.1 Perform system startup in accordance with Attachment A, *RI User Manual*, including:

a. Purge

b. Cool-down

c. Fill

6.2 System Operation

6.2.1 Operate the system in accordance with Attachment A, *RI User Manual*.

6.3 System Shutdown

6.3.1 Shut down the system in accordance with Attachment A, *RI User Manual*, including:

a. Warm-up

b. Shutdown

6.4 Troubleshooting

6.4.1 Perform system troubleshooting in accordance with Attachment A, *RI User Manual*.

6.5 Emergency Shutdown and Restart

Note: The following steps should be followed if there is an emergency (e.g., LN_2 leak, ODH alarm, other safety issues, etc.) or the cryocooler appears to be heading towards an unsafe condition.

6.5.1 **Emergency Stop:** Press the "STOP OFF" button for less than 1 second.

Note: The ready signal for the beamline interlock is now disabled.

6.5.2 Restart after Emergency Stop in accordance with Attachment A, *RI User Manual*.

7 REFERENCES

7.1 PS-C-XFD-PRC-006, *Beamline Enclosures and Cryogen Fill Station ODH Monitoring System Alarm Response Procedure*

7.2 PS-C-XFD-PRC-012, *NSLS-II Beamline Cryocooler Operations – Bruker-ASC*

7.3 PS-C-XFD-PRC-011, *NSLS-II Beamline Cryocooler Operations – FMB Oxford*

7.4 PS-C-XFD-PRC-034, *NSLS-II Beamline Cryocooler Operations – Suzuki Shokan*

7.5 SBMS Subject Area, *Cryogenics Safety*

7.6 PS-ESH-PRM-1.3.6, *Work Planning and Control Procedure*

8 ATTACHMENTS

Attachment A, *RI User Manual*

9 DOCUMENTATION

None. **–END–**

Attachment A – RI User Manual

RI Research Instruments GmbH

research instruments

Cryocooler
Installation and operation manual

Rev2 2016-01-12

Weitergabe sowie Vervielfältigung dieser Unterlage, Verwertung und Mitteilung ihres Inhaltes sind nicht gestattet, soweit nicht ausdrücklich zugestanden. Zuwiderhandlungen verpflichten zu Schadenersatz. Alle Rechte für den Fall der Patenterteilung oder GM-Eintragung vorbehalten.

Copying of this document, and giving it to others and the use or communication of the contents thereof, are forbidden without express authority. Offenders are liable to the payment of damages. All rights are reserved in the event of the grant of a patent or the registration of a utility model or design.

RI Research Instruments GmbH
Friedrich-Ebert-Straße 1
D - 51429 Bergisch Gladbach

Tel.: +49 (2204) 70 62 - 25 00
Fax.: +49 (2204) 70 62 - 25 01
info@research-instruments.de
www.research-instruments.de

Sitz / Commercial Register:
Bergisch Gladbach
Amtsgericht Köln HRB 65967

Geschäftsführer / Managing Directors:
Dr. Michael Peiniger (Sprecher / Spokesman)
Dr. Burkhard Prause
Hanspeter Vogel

RI Research Instruments GmbH

research instruments

RI Research Instruments GmbH
Friedrich-Ebert-Straße 1
D-51429 Bergisch Gladbach
Phone: +49 (2204) 84 5000
Fax: +49 (2204) 84 5001
Internet: www.research-instruments.de

Before taking the device into operation carefully read this manual !

Weitergabe sowie Vervielfältigung dieser Unterlage, Verwertung und Mitteilung ihres Inhaltes sind nicht gestattet, soweit nicht ausdrücklich zugestanden. Zuwiderhandlungen verpflichten zu Schadenersatz. Alle Rechte für den Fall der Patenterteilung oder GM-Eintragung vorbehalten.

Copying of this document, and giving it to others and the use or communication of the contents thereof, are forbidden without express authority. Offenders are liable to the payment of damages. All rights are reserved in the event of the grant of a patent or the registration of a utility model or design.

RI Research Instruments GmbH
Friedrich-Ebert-Straße 1
D - 51429 Bergisch Gladbach

Tel.: +49 (2204) 70 62 - 25 00
Fax.: +49 (2204) 70 62 - 25 01
info@research-instruments.de
www.research-instruments.de

Sitz / Commercial Register:
Bergisch Gladbach
Amtsgericht Köln HRB 65967

Geschäftsführer / Managing Directors:
Dr. Michael Peiniger (Sprecher / Spokesman)
Dr. Burkhard Prause
Hanspeter Vogel

Revision History

Rev #	Date	Created by	Changes - Notes
0	2015-07-22	HWI / SSZ	Created newly, based on old Manual
1	2015-11-18	HWI / SSZ	• Corrected Error in Description of Johnston Coupling • Added section about Top Up Mode
2	2016-01-12	HWI	Corrected Error in Description of Top Up Mode

Weitergabe sowie Vervielfältigung dieser Unterlage, Verwertung und Mitteilung ihres Inhaltes sind nicht gestattet, soweit nicht ausdrücklich zugestanden. Zuwiderhandlungen verpflichten zu Schadenersatz. Alle Rechte für den Fall der Patenterteilung oder GM-Eintragung vorbehalten.

Copying of this document, and giving it to others and the use or communication of the contents thereof, are forbidden without express authority. Offenders are liable to the payment of damages. All rights are reserved in the event of the grant of a patent or the registration of a utility model or design.

Content

1 Important Notice 6

1.1 Explanation of warning notices 7

1.2 Overview of used warning signs 8

2 System Overview 9

2.1 A Basic Description of the Cryocooler 9

3 Installation and Initial Setup 12

3.1 Unloading and Installation of the Cryocooler 12

3.2 Installation and Initial Setup 13

3.2.1 Tools and utilities for initial operation 13
3.2.2 Proper connection of tubing 13
3.2.3 Connecting the compressed air 15
3.2.4 Connecting the transfer lines 16

3.3 Connecting the control system 18

3.3.1 Main Connector 19
3.3.2 EPS interface 19

3.4 Operating the cryocooler via the GUI 21

3.4.1 Short introduction to the GUI 21
3.4.2 Display Mode 22
3.4.3 Expert Mode 23
3.4.4 Top-Up Mode Option 28
3.4.6 Operator Mode 30

4 Commissioning of the cryocooler system 31

4.1 How to prepare the system for commissioning 31

4.1.1 Purging of the cryocooler and the closed loop system 32
4.1.2 Checking for leaks 36
4.1.3 Nitrogen gas connections 36
4.1.4 Turn on the exhaust heater 36
4.1.5 Connect the LN2 supply to the cryo-system 37

5 Operating the cryocooler 38

5.1 The Stop / Stop Off Functions 38

5.1.1 The Stop Function 38
5.1.2 The Stop Off Function 38

5.2 Operating the cryocooler in expert mode 38

Weitergabe sowie Vervielfältigung dieser Unterlage, Verwertung und Mitteilung ihres Inhaltes sind nicht gestattet, soweit nicht ausdrücklich zugestanden. Zuwiderhandlungen verpflichten zu Schadenersatz. Alle Rechte für den Fall der Patenterteilung oder GM-Eintragung vorbehalten.

Copying of this document, and giving it to others and the use or communication of the contents thereof, are forbidden without express authority. Offenders are liable to the payment of damages. All rights are reserved in the event of the grant of a patent or the registration of a utility model or design.

5.2.1 Description of the manual procedures 39
5.2.2 Correct pressure in the closed loop 41
5.2.3 Adjusting the flow rate (pump frequency) 42
5.2.4 Standard operating parameters without additional heat load 42
5.2.5 Adjusting / Correction of the level in the heater vessel 42
5.2.6 Automatic refill of the subcooler 43
5.2.7 Isolating the consumer / warming up of the consumer 43
5.2.8 Operation parameter sets of the cryo-system 44

5.3 Operating the cryocooler in Operator Mode 47

5.3.1 Description of the automatic procedures 47

5.4 Shut down of the cryocooler 49

5.4.1 Turn off procedure of the system 49
5.4.2 Draining of the subcooler 49
5.4.3 Draining the heater vessel 53

6 Troubleshooting 55

6.1 Warning and Alarms 55

6.1.1 Icing on tubing or at the outside of the subcooler vessel 56
6.1.2 Temperature does not drop during cool down 57
6.1.3 Valve V19 does not operate 57
6.1.4 The cryocooler does not switch to ready state 58

7 Maintenance & Inspection 58

7.1 Pressure control test of the closed loop 58

7.2 Leak-test of the closed loop system 59

7.3 Automatic restart test 59

7.4 Visual Inspection of the cryocooler 59

7.5 Leak test with consumer 60

7.6 Leak test without consumer 60

Weitergabe sowie Vervielfältigung dieser Unterlage, Verwertung und Mitteilung ihres Inhaltes sind nicht gestattet, soweit nicht ausdrücklich zugestanden. Zuwiderhandlungen verpflichten zu Schadenersatz. Alle Rechte für den Fall der Patenterteilung oder GM-Eintragung vorbehalten.

Copying of this document, and giving it to others and the use or communication of the contents thereof, are forbidden without express authority. Offenders are liable to the payment of damages. All rights are reserved in the event of the grant of a patent or the registration of a utility model or design.

1 Important Notice

In the event of any uncertainties or questions, please contact RI Research Instruments. Only persons familiar with the operation of cryo systems and vacuum technology shall carry out installation and handling of the cryocooler. This manual describes the installation and the operation of the automatic and manual functions of the cryocooler.

All information provided within this manual have been carefully checked and found correct. RI Research Instruments, however, does not assume any liability for any and all failures and/or errors caused by incorrect use which are not covered by the warranty provisions.
Safety warnings are posted throughout the manual, please see chapter 1.1 (Explanation of warning notices). These warnings are designated by an appropriate symbol inside an equilateral triangle. The level of danger is described according to an alarm keyword.

Weitergabe sowie Vervielfältigung dieser Unterlage, Verwertung und Mitteilung ihres Inhaltes sind nicht gestattet, soweit nicht ausdrücklich zugestanden. Zuwiderhandlungen verpflichten zu Schadenersatz. Alle Rechte für den Fall der Patenterteilung oder GM-Eintragung vorbehalten.

Copying of this document, and giving it to others and the use or communication of the contents thereof, are forbidden without express authority. Offenders are liable to the payment of damages. All rights are reserved in the event of the grant of a patent or the registration of a utility model or design.

1.1 Explanation of warning notices

To avoid injuries during operation of the cryocooler the manual has warnings notices implemented to protect the operators from injuries. Here a basic overview of the warning levels, and their meanings.

DANGER

DANGER indicates an imminently hazardous situation which, if not avoided, will result in death or serious injury. This signal word is limited to the most extreme situations.

WARNING

WARNING indicates a potentially hazardous situation, which, if not avoided, could result in death or serious injury.

CAUTION

CAUTION indicates a potentially hazardous situation, which, if not avoided, may result in property damage

Weitergabe sowie Vervielfältigung dieser Unterlage, Verwertung und Mitteilung ihres Inhaltes sind nicht gestattet, soweit nicht ausdrücklich zugestanden. Zuwiderhandlungen verpflichten zu Schadenersatz. Alle Rechte für den Fall der Patenterteilung oder GM-Eintragung vorbehalten.

Copying of this document, and giving it to others and the use or communication of the contents thereof, are forbidden without express authority. Offenders are liable to the payment of damages. All rights are reserved in the event of the grant of a patent or the registration of a utility model or design.

1.2 Overview of used warning signs

With the following symbols, which are used throughout this manual, potentially hazardous areas or situations are marked. Follow the given remarks to prevent any harm to live or goods!

GENERAL WARNING
Indicates a potentially hazardous situation, which, if not avoided, could result in death or serious injuries.

ELECTRICITY
Danger due to electricity, may result in hazardous situations which, if not avoided, could result in death or serious injuries. All tasks referring to electricity are to be carried out by skilled and trained people.

LOW TEMPERATURE
Indicates a potentially hazardous situation, which, if not avoided, could result in serious injuries through e.g. cold liquids, gases or surfaces. This could e.g. happen while refilling cryogenic liquids.

HOT SURFACE
Indicates a potentially hazardous situation, which, if not avoided, could result in serious injuries through e.g. hot surfaces. This could e.g. happen during a Bake-Out procedure.

Weitergabe sowie Vervielfältigung dieser Unterlage, Verwertung und Mitteilung ihres Inhaltes sind nicht gestattet, soweit nicht ausdrücklich zugestanden. Zuwiderhandlungen verpflichten zu Schadenersatz. Alle Rechte für den Fall der Patenterteilung oder GM-Eintragung vorbehalten.

Copying of this document, and giving it to others and the use or communication of the contents thereof, are forbidden without express authority. Offenders are liable to the payment of damages. All rights are reserved in the event of the grant of a patent or the registration of a utility model or design.

2 System Overview

2.1 A Basic Description of the Cryocooler

The Cryo-System is designed to cool the consumer component of a consumer with liquid nitrogen. Liquid nitrogen is supplied to the consumer via transfer pipes by means of a liquid nitrogen pump and takes the heat load off the consumer component. Slightly warmer nitrogen is returned by the second transfer line to the Cryo-System.

Inside the cryocooler system there is a heat exchanger. This heat exchanger is cooled by liquid nitrogen at atmospheric pressure at a temperature of approx. 77 K. This nitrogen is stored inside a vacuum insulated storage dewar. The storage container is part of the Cryo-System and is called subcooler. The heat exchanger is located in between the pump and the supply line. This circuit is a closed loop system working at overpressure to make sure the liquid nitrogen does not boil and it supplies continuously cold nitrogen to the DCM.

Table 1 Overview of the parts of a cryocooler

Component	Count	Parts of Component	
Complete cryocooler	1 x	▪ subcooler vessel ▪ Liquid nitrogen pump ▪ Valves and gauges ▪ Over pressure relieve valves ▪ Heated Exhaust / vent pipe ▪ Junction box	Included
Liquid nitrogen supply line	1 x		*optional*
Welding adapter	1 x		*optional*
Transfer lines	2 x		*optional*
Control rack including touch panel	1 x	Optional: 19" rack mounts including touch panel, power distribution crate and PLC crate	included
Interconnecting cables	3 x		included

Refer to Figure 1 for the exact position of each part within the cryocooler.

Weitergabe sowie Vervielfältigung dieser Unterlage, Verwertung und Mitteilung ihres Inhaltes sind nicht gestattet, soweit nicht ausdrücklich zugestanden. Zuwiderhandlungen verpflichten zu Schadenersatz. Alle Rechte für den Fall der Patenterteilung oder GM-Eintragung vorbehalten.

Copying of this document, and giving it to others and the use or communication of the contents thereof, are forbidden without express authority. Offenders are liable to the payment of damages. All rights are reserved in the event of the grant of a patent or the registration of a utility model or design.

Figure 1: Main components of the Cryo-System

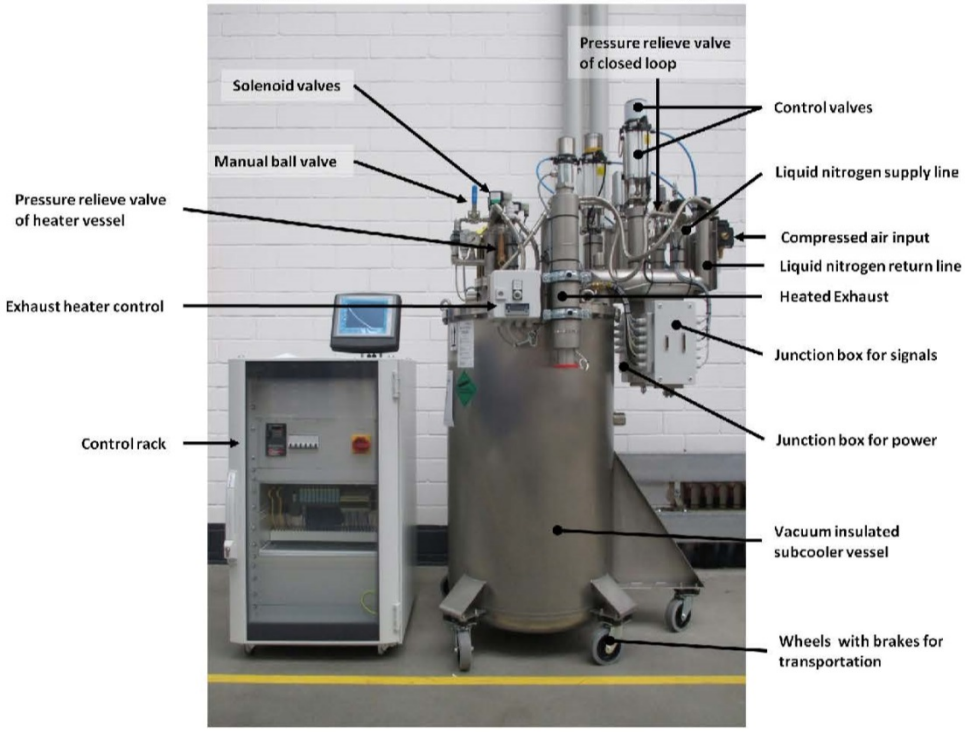

Table 2 Dimensions and Weight of the cryocooler and Control Rack

Dimensions cryocooler	H 200 x L 120 x W 90 cm
Weight cryocooler	~ 300 Kg (tare weight)
Dimensions control rack	H 135 x L 67 x W 61 cm
Weight control rack	~ 50 kg

Weitergabe sowie Vervielfältigung dieser Unterlage, Verwertung und Mitteilung ihres Inhaltes sind nicht gestattet, soweit nicht ausdrücklich zugestanden. Zuwiderhandlungen verpflichten zu Schadenersatz. Alle Rechte für den Fall der Patenterteilung oder GM-Eintragung vorbehalten.

Copying of this document, and giving it to others and the use or communication of the contents thereof, are forbidden without express authority. Offenders are liable to the payment of damages. All rights are reserved in the event of the grant of a patent or the registration of a utility model or design.

Table 3 Technical Specification of the cryocooler

Operating voltage	230 V (+5% / -10%)
Line frequency	50 / 60 Hz
Max. operating current	< 16 A
Average operating current	3 - 4 A
Standard cable length cooler to control rack	20 m (max. 40m)
Compressed air pressure	6 bar
Compressed air connection	Tubing inner diameter 9 mm
Compressed nitrogen pressure	2 bar
Compressed nitrogen connection	KF25 flange
Ambient temperature during operation	5 °C - 30°C
Ambient relative air humidity	95% non condensing
Liquid nitrogen connection	CGA 295, ¾" – 16 UNF optional: Johnston coupling DN14 (female)
Transfer line connection	Johnston Coupling DN14 (female / male)
Max. Nitrogen flow at 80 Hz	> 15 l/min (depending on flow restriction caused by consumer)
Max Heat Load (with consumer)	2000 W
Operating pressure in closed loop	2 - 5 bar (optional: 10 bar)
Liquid nitrogen consumption (with consumer, consumption per 100 Watt)	~ 2.4 l/h
Liquid nitrogen storage volume	200 l
Pressure stability (@ typical operation parameter)	< 5 mbar (RMS)
Interface to control system (EPS)	D-Sub 9 male 4 outputs: ○ ready ○ failure/alarm ○ high level alarm ○ low level alarm 2 inputs: ○ cryocooler enable ○ ups power ok

Weitergabe sowie Vervielfältigung dieser Unterlage, Verwertung und Mitteilung ihres Inhaltes sind nicht gestattet, soweit nicht ausdrücklich zugestanden. Zuwiderhandlungen verpflichten zu Schadenersatz. Alle Rechte für den Fall der Patenterteilung oder GM-Eintragung vorbehalten.

Copying of this document, and giving it to others and the use or communication of the contents thereof, are forbidden without express authority. Offenders are liable to the payment of damages. All rights are reserved in the event of the grant of a patent or the registration of a utility model or design.

3 Installation and Initial Setup

3.1 Unloading and Installation of the Cryocooler

Check the cryocooler for transportation damages after unloading and dispose packing material according to local regulation. Also check for completeness as described in Table 1 of chapter 2.

The cooler is equipped with wheels so it can be easily transported to the test facility or to the final destination. After unlocking the brakes transport the cryocooler to its destination and lock the brakes again when the cryocooler is located at the final position.

Caution

2 persons are required to move the cryocooler safely. Lock the brakes of the wheels at the final destination.

Weitergabe sowie Vervielfältigung dieser Unterlage, Verwertung und Mitteilung ihres Inhaltes sind nicht gestattet, soweit nicht ausdrücklich zugestanden. Zuwiderhandlungen verpflichten zu Schadenersatz. Alle Rechte für den Fall der Patenterteilung oder GM-Eintragung vorbehalten.

Copying of this document, and giving it to others and the use or communication of the contents thereof, are forbidden without express authority. Offenders are liable to the payment of damages. All rights are reserved in the event of the grant of a patent or the registration of a utility model or design.

3.2 Installation and Initial Setup

3.2.1 Tools and utilities for initial operation

Cryogenic Liquid
Please make sure you wear gloves and glasses while handling cryogenic equipment. Please follow your local safety regulations, too.

The following utilities are required for installation and operation:

- Permanently installed LN2 supply line or a ≥ 500 l dewar;
- Compressed air, 6 (+0.5) bar, inner Ø 8 - 9 mm;
- Compressed dry nitrogen gas, 2 bar, DN 25KF;
- 230 V, 50/60 Hz (+5% /-10%) Main Power supply, single phase

3.2.2 Proper connection of tubing

To make sure the system will work properly, please check that all the nitrogen lines are connected properly as shown in Figure 2.

Figure 2: Tubing of closed loop Systems

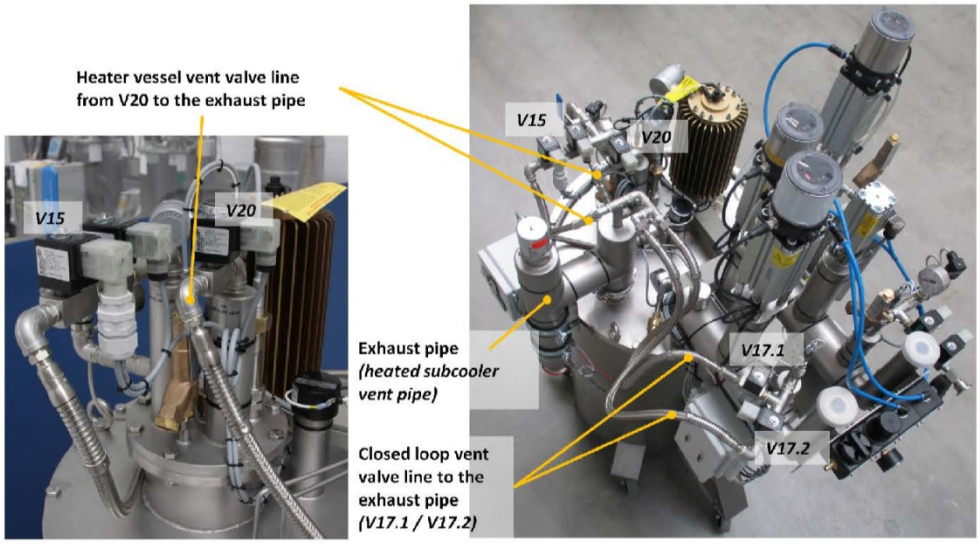

Weitergabe sowie Vervielfältigung dieser Unterlage, Verwertung und Mitteilung ihres Inhaltes sind nicht gestattet, soweit nicht ausdrücklich zugestanden. Zuwiderhandlungen verpflichten zu Schadenersatz. Alle Rechte für den Fall der Patenterteilung oder GM-Eintragung vorbehalten.

Copying of this document, and giving it to others and the use or communication of the contents thereof, are forbidden without express authority. Offenders are liable to the payment of damages. All rights are reserved in the event of the grant of a patent or the registration of a utility model or design.

Also

Figure 3: Proper connecting of cabling and air supply at STÖHR valve controllers (left: Cablings might be disconnected for the transport and have to be re-connected; right: proper setup)

The two right handed pictures in Figure 3 demonstrate a proper setup of connected cablings and air tubes at the STÖHR valve controllers on top of the cryocooler. For transporting some of the control cables or air tubes might be disconnected (left picture) and have to be re-attached in prior to commissioning of the cryocooler system as shown.

Weitergabe sowie Vervielfältigung dieser Unterlage, Verwertung und Mitteilung ihres Inhaltes sind nicht gestattet, soweit nicht ausdrücklich zugestanden. Zuwiderhandlungen verpflichten zu Schadenersatz. Alle Rechte für den Fall der Patenterteilung oder GM-Eintragung vorbehalten.

Copying of this document, and giving it to others and the use or communication of the contents thereof, are forbidden without express authority. Offenders are liable to the payment of damages. All rights are reserved in the event of the grant of a patent or the registration of a utility model or design.

3.2.3 Connecting the compressed air

The compressed air will be connected at the left hand side of the manifold (See Figure 4). The compressed air supply connection is equipped with ¾" threads. It will be equipped at RI Research Instruments GmbH with a quick connector to mount a flexible tube. Set the air pressure to 6 bar. A tubing inner diameter 9 mm can be used to connect the air supply.

Figure 4: Manifold and the connection for compressed air

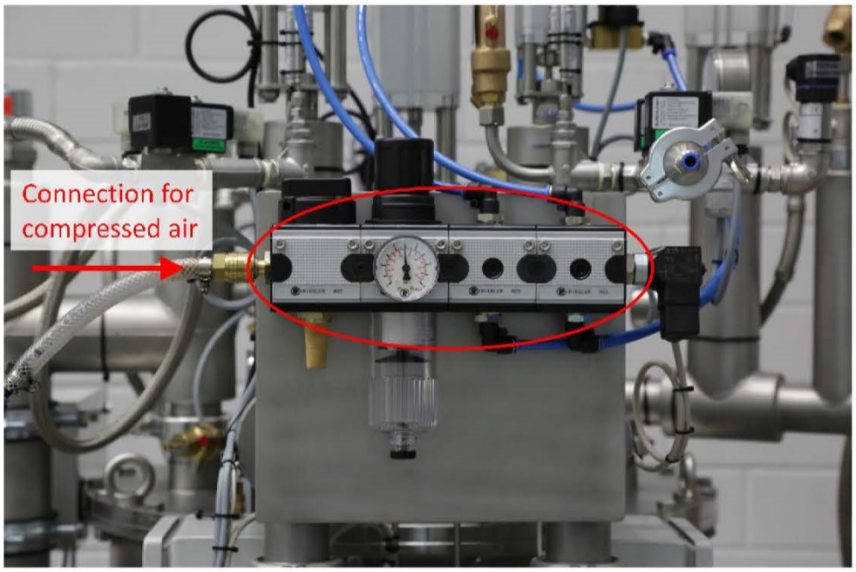

Weitergabe sowie Vervielfältigung dieser Unterlage, Verwertung und Mitteilung ihres Inhaltes sind nicht gestattet, soweit nicht ausdrücklich zugestanden. Zuwiderhandlungen verpflichten zu Schadenersatz. Alle Rechte für den Fall der Patenterteilung oder GM-Eintragung vorbehalten.

Copying of this document, and giving it to others and the use or communication of the contents thereof, are forbidden without express authority. Offenders are liable to the payment of damages. All rights are reserved in the event of the grant of a patent or the registration of a utility model or design.

3.2.4 Connecting the transfer lines

The transfer lines are equipped with Johnston couplings. These couplings connect the DCM with the Cryo-System.

The Johnston coupling consists of 5 parts (see Figure 5). The seal at the cold end is made of Teflon. The seal is not symmetric at both sides. One side is bevelled and one side is recessed (see Figure 5, right). To mount the gasket properly, the bevelled side should point towards the male part of the Johnston coupling. Please mount the O-Ring and the clamp as shown in Figure 6. Tighten the nuts carefully.

Connect the transfer lines to the consumer . Make sure, that the gaskets of the couplings are in the right position so that there is no nitrogen leakage and that the bending radius of the transfer lines is larger than 400mm.

Danger: Cryogenic Liquid

Make sure no remaining liquid nitrogen is in the transfer lines while opening the flanges. Please make sure you wear gloves and glasses while handling cryogenic equipment. Please follow your local safety regulations, too. In case overpressure is in the system please open V17.1 or V20 to relieve the overpressure.

Before continuing with the next chapter it is advised to perform a leak tight test and a pressure-resistant test up to the specified cryocooler pressure.

Weitergabe sowie Vervielfältigung dieser Unterlage, Verwertung und Mitteilung ihres Inhaltes sind nicht gestattet, soweit nicht ausdrücklich zugestanden. Zuwiderhandlungen verpflichten zu Schadenersatz. Alle Rechte für den Fall der Patenterteilung oder GM-Eintragung vorbehalten.

Copying of this document, and giving it to others and the use or communication of the contents thereof, are forbidden without express authority. Offenders are liable to the payment of damages. All rights are reserved in the event of the grant of a patent or the registration of a utility model or design.

Figure 5: Brief description of the Johnston coupling and sealing

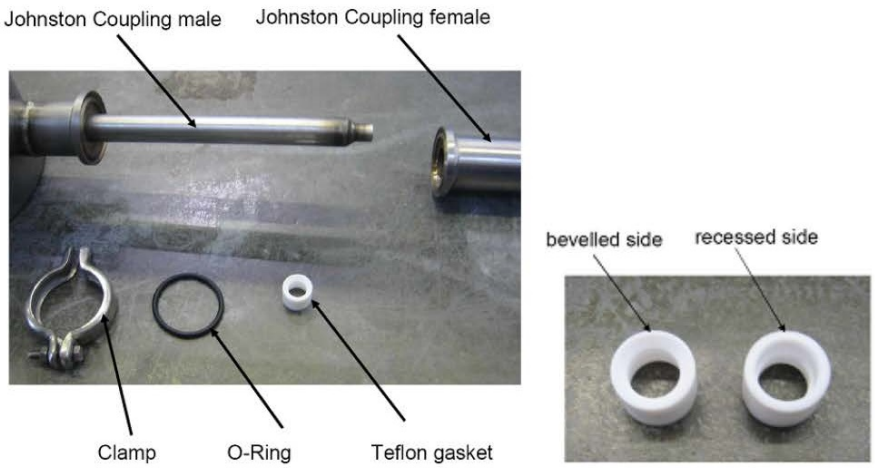

Figure 6: Mounting and Clamping Sequence

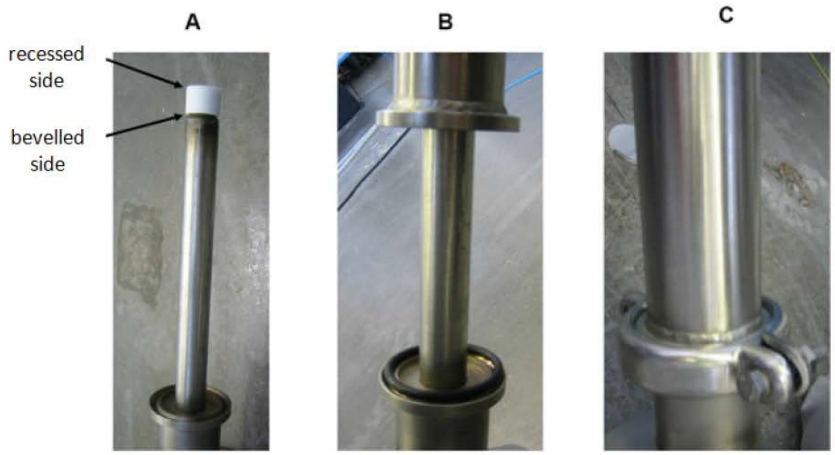

Remark: Make sure to use silver coated nuts in combination with steel screws to prevent Seizing.

Weitergabe sowie Vervielfältigung dieser Unterlage, Verwertung und Mitteilung ihres Inhaltes sind nicht gestattet, soweit nicht ausdrücklich zugestanden. Zuwiderhandlungen verpflichten zu Schadenersatz. Alle Rechte für den Fall der Patenterteilung oder GM-Eintragung vorbehalten.

Copying of this document, and giving it to others and the use or communication of the contents thereof, are forbidden without express authority. Offenders are liable to the payment of damages. All rights are reserved in the event of the grant of a patent or the registration of a utility model or design.

3.3 Connecting the control system

Danger: Electricity
The control system should be connected and powered up by a qualified electrician.

In Figure 7**Fehler! Verweisquelle konnte nicht gefunden werden.** you find an overview of the connections between the cryocooler and the control rack and below a description with the explanation of the connections.

Figure 7: Electrical connections

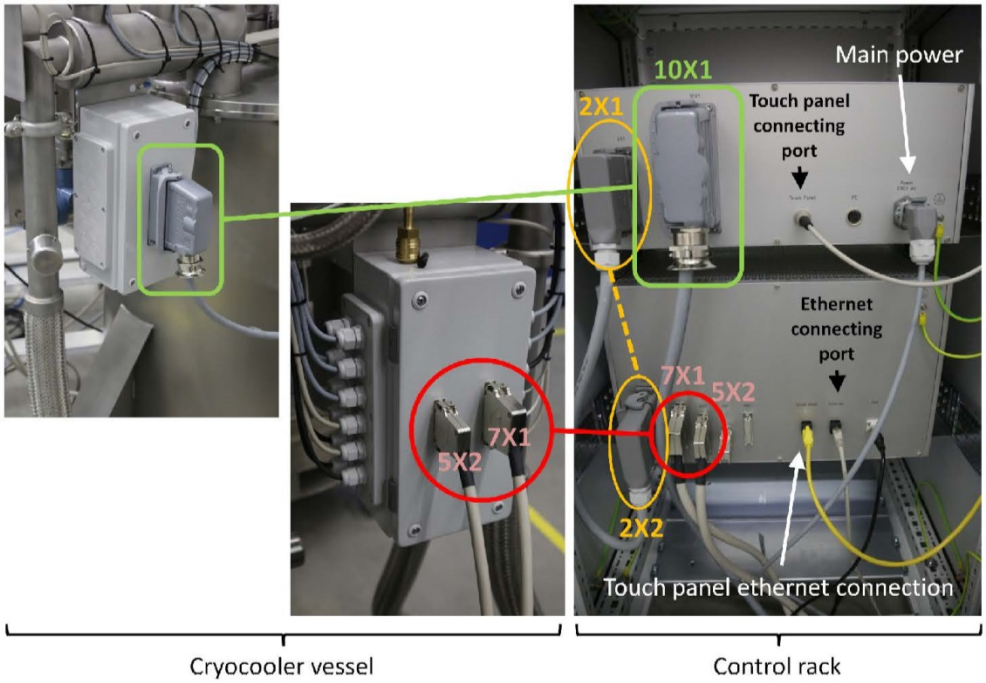

Weitergabe sowie Vervielfältigung dieser Unterlage, Verwertung und Mitteilung ihres Inhaltes sind nicht gestattet, soweit nicht ausdrücklich zugestanden. Zuwiderhandlungen verpflichten zu Schadenersatz. Alle Rechte für den Fall der Patenterteilung oder GM-Eintragung vorbehalten.

Copying of this document, and giving it to others and the use or communication of the contents thereof, are forbidden without express authority. Offenders are liable to the payment of damages. All rights are reserved in the event of the grant of a patent or the registration of a utility model or design.

3.3.1 Main Connector

The main connector (plug and socket supplied) is located inside the rack on the backside of the large 19" crate. The parts of the connector are inside a bag at the backside of the rack. The socket is labelled 1X1. For details about the connector please see Figure 8.
In case the main power is already connected to the rack, please feel free to connect the cables between the control rack and the cryo-system prior to turn on the power. All electrical connectors cannot be interchanged since they are all of different types and sizes.

Figure 8: Detailed view of the part of the connector

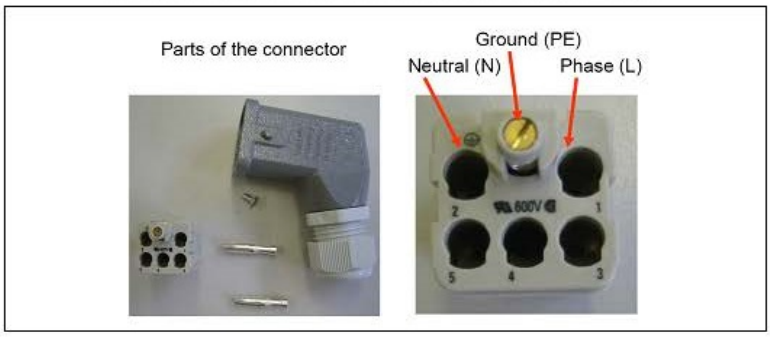

3.3.2 EPS interface

The Sub D9 connector 4X1 at the backside of the control rack (see Figure 7) provides signals that can be interfaced to the EPS. There will be a dummy connector delivered in case the cryocooler will not be connected to an EPS system in which the pins no. 6 and 7 as well as no. 8 and 9 are bridged.
The cryocooler has 4 outputs and 2 inputs available that can be connected to the customer's EPS system. Please see wiring for more information.

Weitergabe sowie Vervielfältigung dieser Unterlage, Verwertung und Mitteilung ihres Inhaltes sind nicht gestattet, soweit nicht ausdrücklich zugestanden. Zuwiderhandlungen verpflichten zu Schadenersatz. Alle Rechte für den Fall der Patenterteilung oder GM-Eintragung vorbehalten.

Copying of this document, and giving it to others and the use or communication of the contents thereof, are forbidden without express authority. Offenders are liable to the payment of damages. All rights are reserved in the event of the grant of a patent or the registration of a utility model or design.

Table 4: EPS output and input signals

Name	Input/output	Status relais / description
CC ready	Output	Closed: System is in ready status (system operating under cold conditions with normal operating parameters) Open: System is not in ready status
No CC Alarm	Output	Closed: There are no alarms Open: System is in stop/off
LT19 No HL Alarm	Output	Closed: Filling level LT19 is not above 94% Open: Filling level LT19 is above 94%
LT19 No LL Alarm	Output	Closed: Filling level LT19 is not below 6% Open: Filling level LT19 is below 6%
CC enable	Input	Closed: System can be operated Open: System is in stop/off (no changes can be made to the system such as opening/closing of valves, etc.)
UPS power ok	Input	Closed: System is operated with operating parameters Open: System will run in low power mode (pump frequency is set to 30Hz, pressure control in heater vessel is turned off, vent pipe heater is turned off) This input is used if an uninterruptible power supply (UPS) is connected to the controls. Whenever the relais is closed again the cryo system will run with the same parameters as it was before power breakdown.

Weitergabe sowie Vervielfältigung dieser Unterlage, Verwertung und Mitteilung ihres Inhaltes sind nicht gestattet, soweit nicht ausdrücklich zugestanden. Zuwiderhandlungen verpflichten zu Schadenersatz. Alle Rechte für den Fall der Patenterteilung oder GM-Eintragung vorbehalten.

Copying of this document, and giving it to others and the use or communication of the contents thereof, are forbidden without express authority. Offenders are liable to the payment of damages. All rights are reserved in the event of the grant of a patent or the registration of a utility model or design.

3.4 Operating the cryocooler via the GUI

3.4.1 Short introduction to the GUI

Basically three levels of operation are available:

I. Display Mode
II. Expert Mode
III. Operator Mode
IV. System Settings

Within the **display mode** you are only able to select the mode (expert or operator mode) or to stop the cryocooler.

In the **System Settings** you are able to set the time, change the password, transfer data and shut off the runtime.

The **expert** is able to operate every valve, to select all frequencies of the pump and to set the system pressure.

The **operator mode** offers a limited set of functions to protect the system. The operator is allowed to select the following options:

- Automatic cool down
- Automatic warm up
- Automatic refill of the heater vessel
- Stop function

The operator is **not** allowed to:

- Turn on / off the auto refill function of the subcooler
- Determine trigger values for auto refill
- Select the proper drive frequency of the pump
- To select particular throttle valve settings
- To select specific operating pressures
- To turn on / off the pressure control
- To turn on / off the exhaust heater
- To select a specific filling level of the heater vessel

Weitergabe sowie Vervielfältigung dieser Unterlage, Verwertung und Mitteilung ihres Inhaltes sind nicht gestattet, soweit nicht ausdrücklich zugestanden. Zuwiderhandlungen verpflichten zu Schadenersatz. Alle Rechte für den Fall der Patenterteilung oder GM-Eintragung vorbehalten.

Copying of this document, and giving it to others and the use or communication of the contents thereof, are forbidden without express authority. Offenders are liable to the payment of damages. All rights are reserved in the event of the grant of a patent or the registration of a utility model or design.

3.4.2 Display Mode

By default the system is set in display mode.

Figure 9: GUI interface layout

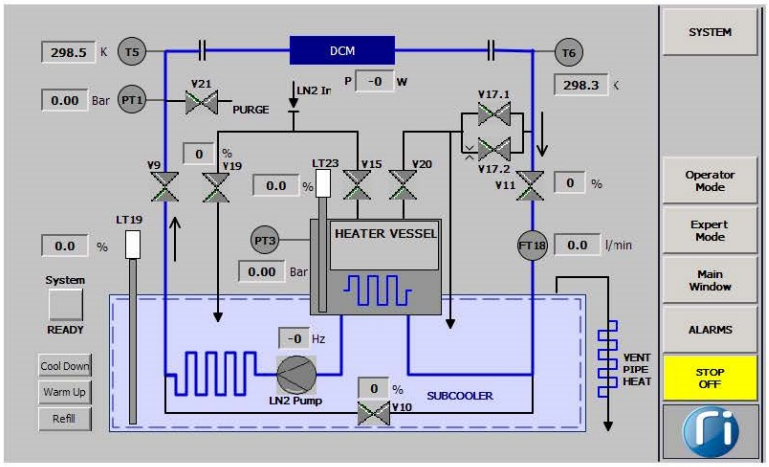

To enter the expert mode hit the button *"Expert Mode"*. To enter the operator mode hit the button *"Operator Mode"*. You will be asked for a password in the following screen:

Figure 10: Window for password

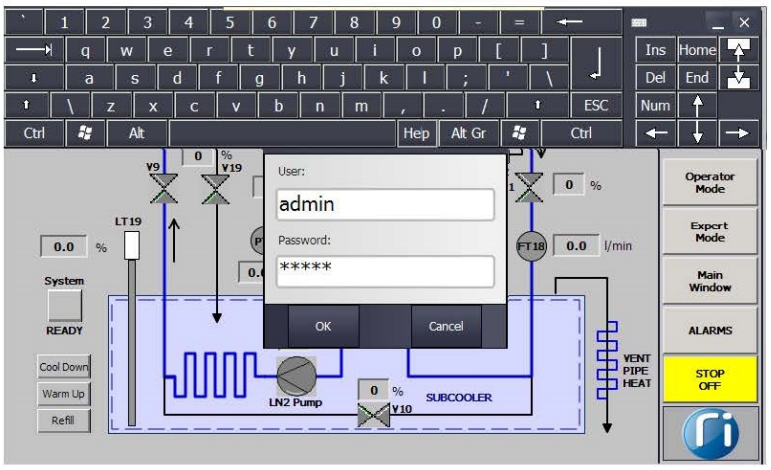

Weitergabe sowie Vervielfältigung dieser Unterlage, Verwertung und Mitteilung ihres Inhaltes sind nicht gestattet, soweit nicht ausdrücklich zugestanden. Zuwiderhandlungen verpflichten zu Schadenersatz. Alle Rechte für den Fall der Patenterteilung oder GM-Eintragung vorbehalten.

Copying of this document, and giving it to others and the use or communication of the contents thereof, are forbidden without express authority. Offenders are liable to the payment of damages. All rights are reserved in the event of the grant of a patent or the registration of a utility model or design.

The password by default is ***"admin"*** for the expert mode and for the operator mode. Now you are allowed to enter the operator mode or the expert mode. Hit the button "Expert Mode" or "Operator Mode" again. In case you have selected expert mode, you are now able to operate all components of the cooler manually.
To exit the operator mode or the expert mode, hit the "Op. Mod. EXIT" button or the "Expert mode exit" button. Enter the password and select the "Op. Mod. EXIT" button or the "Exp. Mod. EXIT" button again.

Now the window shown in Figure 9 opens up again and you are able to select either the expert or the operator mode.

3.4.3 Expert Mode

Within the expert mode valves and other components of the cryocooler can be managed manually with full control. Besides that in expert mode the menu "Operation parameter" allows to save, change, download and upload different parameters sets (see chapter 6.2.8).

After logging in to the expert mode the valves and their components change to active fields within the touch screen (see Figure 11):

Figure 11: Active areas within the expert mode

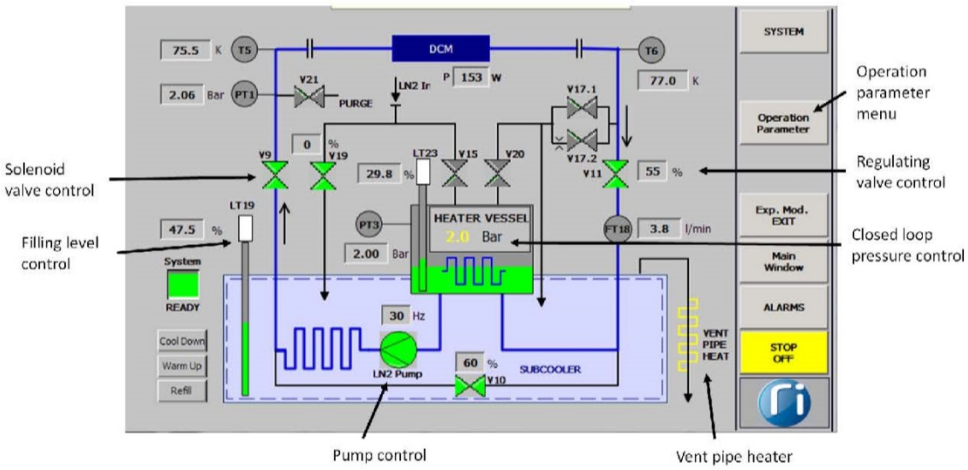

Weitergabe sowie Vervielfältigung dieser Unterlage, Verwertung und Mitteilung ihres Inhaltes sind nicht gestattet, soweit nicht ausdrücklich zugestanden. Zuwiderhandlungen verpflichten zu Schadenersatz. Alle Rechte für den Fall der Patenterteilung oder GM-Eintragung vorbehalten.

Copying of this document, and giving it to others and the use or communication of the contents thereof, are forbidden without express authority. Offenders are liable to the payment of damages. All rights are reserved in the event of the grant of a patent or the registration of a utility model or design.

Table 5: Overview – Active areas and their possible status settings

Komponente	Status	Komponente	Status
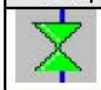	Open Valve		Closed Valve
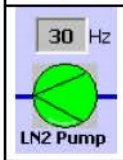	Pump turned on, running at 30Hz	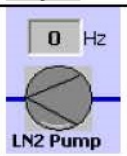	Pump Off
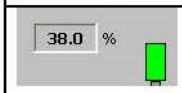	Filling Level Sensor, auto-refill activated.	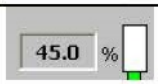	Filling Level Sensor, auto-refill de-activated.
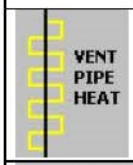	Vent Pipe Heat switched on	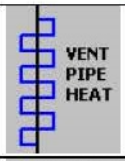	Vent Pipe Heat switched off
	Pressure Control on; Set point: 2 bar	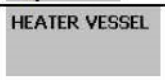	Pressure Control off

By pressing one of the active areas on the touch screen (see Figure 11) an extra windows opens. In this extra window (see Table 5) the component itself can be controlled manually. With the "*Main*" button you can return to the main window.

Weitergabe sowie Vervielfältigung dieser Unterlage, Verwertung und Mitteilung ihres Inhaltes sind nicht gestattet, soweit nicht ausdrücklich zugestanden. Zuwiderhandlungen verpflichten zu Schadenersatz. Alle Rechte für den Fall der Patenterteilung oder GM-Eintragung vorbehalten.

Copying of this document, and giving it to others and the use or communication of the contents thereof, are forbidden without express authority. Offenders are liable to the payment of damages. All rights are reserved in the event of the grant of a patent or the registration of a utility model or design.

Table 6: Component Windows and Control of components

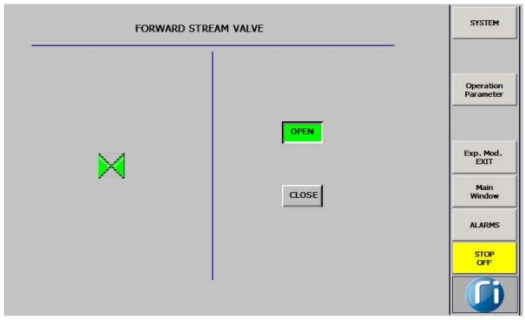	Press the button "Open" to open a valve. The button and the symbol of the valve change to green. Press the button "Close" to close the valve. The valve will turn grey.
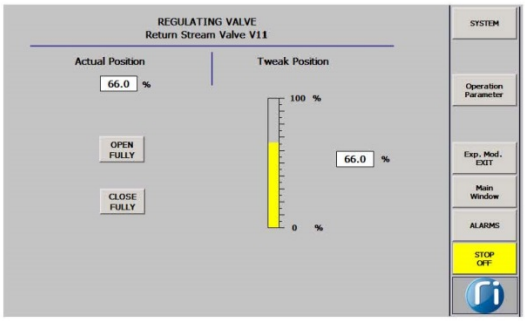	To open/close one of the regulating valves to a specific level select the right box, fill in the value and press enter. The valve will be set to the corresponding level. To open or to close the valve fully, press the "open" or "close" button.
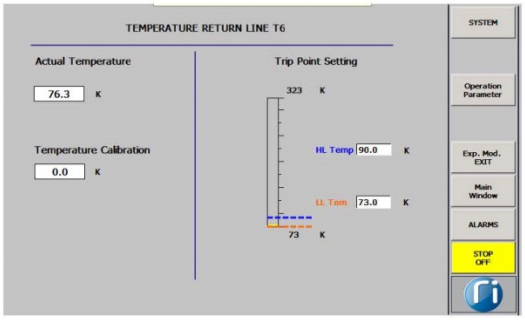	To change the temperature limits in the Temperature Return Line T6 window press the high limit (HLIM) or low limit (LLIM) box and type in the required temperature value and press enter.

Weitergabe sowie Vervielfältigung dieser Unterlage, Verwertung und Mitteilung ihres Inhaltes sind nicht gestattet, soweit nicht ausdrücklich zugestanden. Zuwiderhandlungen verpflichten zu Schadenersatz. Alle Rechte für den Fall der Patenterteilung oder GM-Eintragung vorbehalten.

Copying of this document, and giving it to others and the use or communication of the contents thereof, are forbidden without express authority. Offenders are liable to the payment of damages. All rights are reserved in the event of the grant of a patent or the registration of a utility model or design.

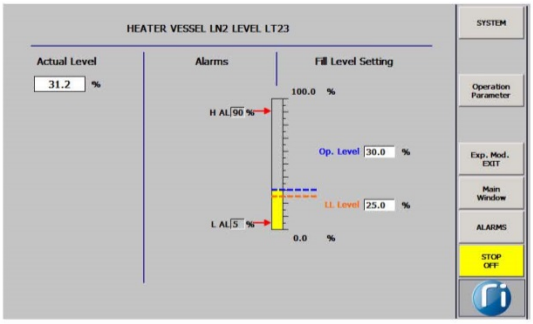	To change the required filling level in the heater vessel press the Operation limit, type in the required fill level and press enter. To change the low limit, press the LLIM box and type in the supposed low limit. When the filling level is below that value, a warning will show up on the display.
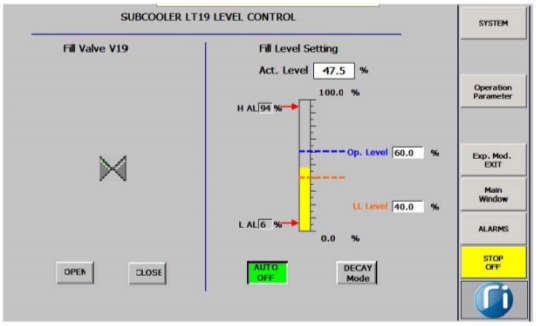	To change the fill level in the subcooler LT19 press the high limit (HLIM) or the low limit (LLIM), type in the required values and press enter. To fill the subcooler automatically press the "Auto-On" button. The button will change to green. To switch the auto-fill off, press shortly the "Auto-Off" button.
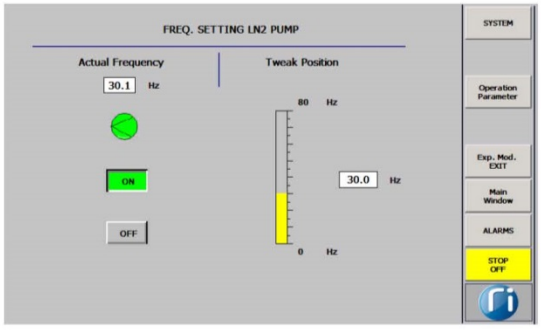	To set the pump frequency press the box on the right side, type in the required value and press enter. To switch the pump on press the "On"-button, the button will turn green. To switch the pump off, press the "Off"-button.

Weitergabe sowie Vervielfältigung dieser Unterlage, Verwertung und Mitteilung ihres Inhaltes sind nicht gestattet, soweit nicht ausdrücklich zugestanden. Zuwiderhandlungen verpflichten zu Schadenersatz. Alle Rechte für den Fall der Patenterteilung oder GM-Eintragung vorbehalten.

Copying of this document, and giving it to others and the use or communication of the contents thereof, are forbidden without express authority. Offenders are liable to the payment of damages. All rights are reserved in the event of the grant of a patent or the registration of a utility model or design.

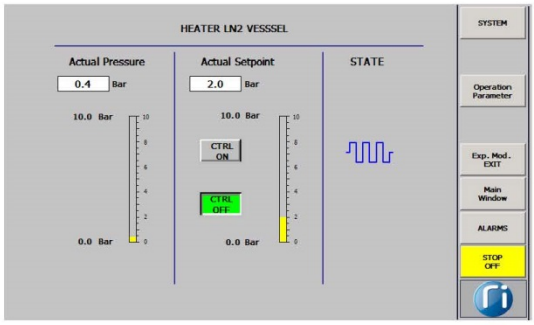	To change the pressure set point of the heater vessel, press the "actual set point" box, type in the value and hit enter. To change the control state of the heater vessel, press the "CTRL On"- or "CTRL Off"-button. When the heater is active the heater symbol will be yellow, when inactive it will be blue.
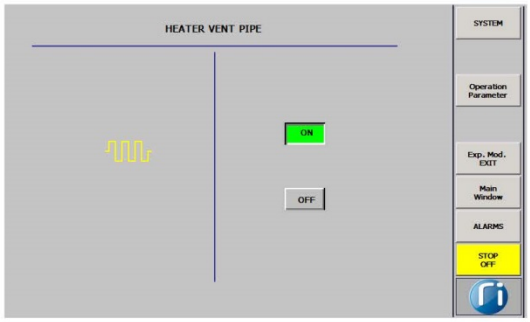	To switch on the heater vent pipe press the "On"-button on the touch screen. The button will change to green and the heater vent pipe will change to yellow. To switch off the heater vent pipe press the "Off"-button on the touch screen. The heater vent pipe will change to blue.

To exit the expert mode, hit the "Expert mode exit" button. Enter the password and select the "Expert mode exit" button again.
Now the window shown in Figure 9 opens up again and you are able to select either the expert or operator mode.

Weitergabe sowie Vervielfältigung dieser Unterlage, Verwertung und Mitteilung ihres Inhaltes sind nicht gestattet, soweit nicht ausdrücklich zugestanden. Zuwiderhandlungen verpflichten zu Schadenersatz. Alle Rechte für den Fall der Patenterteilung oder GM-Eintragung vorbehalten.

Copying of this document, and giving it to others and the use or communication of the contents thereof, are forbidden without express authority. Offenders are liable to the payment of damages. All rights are reserved in the event of the grant of a patent or the registration of a utility model or design.

3.4.4 Top-Up Mode Option

To reduce disturbances in the closed loop pressure stability during the subcooler refilling operation, RI offers an additional filling mode the so called "Top Up Mode".
To activate the Top Up Mode push the corresponding button when you are on the LT19 Level Control screen, which is only accessible in Expert Mode.

With the Top Up Mode being in operation, opening of the regulating filling valve V19 will not be an binary open-close operation with the filling level varying between upper and lower limit anymore.

Instead the V19 opening will be continuously regulated by the control system in order to keep the filling level constant at the Operational Level (50 – 60 %). This means the subcooler is refilled with just as much liquid nitrogen as is evaporated by the consumer induced heat load.
This continuous refilling removes the pressure-burst visible in the outlet pressure and allows for a real continuous disturbance free operation.

Where available, the Top Up Mode operation control is implemented within the subcooler LT19 level control (see Figure 12).

A set of control parameters needs to be defined and tuned. During installation the RI personal will assist you finding the correct settings, that depend on the filling pressure of your supply lines and the kind of filling valve installed in your cryocooler

Figure 12: TOP UP Mode options

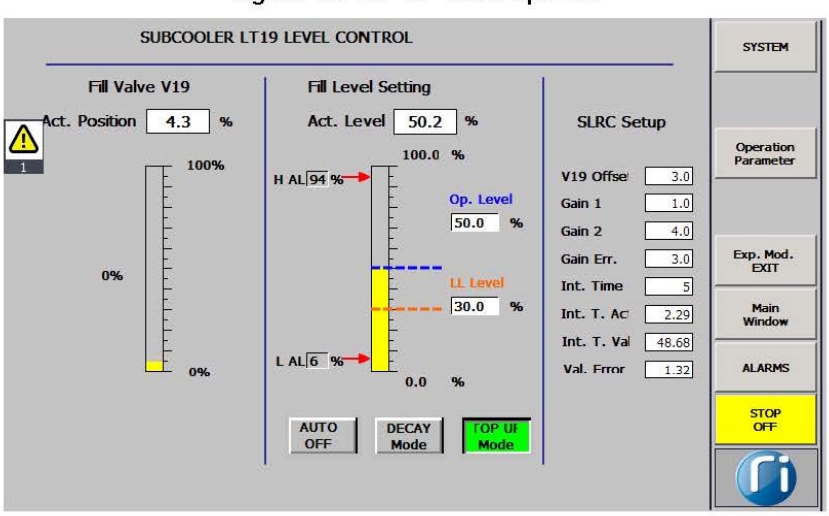

Weitergabe sowie Vervielfältigung dieser Unterlage, Verwertung und Mitteilung ihres Inhaltes sind nicht gestattet, soweit nicht ausdrücklich zugestanden. Zuwiderhandlungen verpflichten zu Schadenersatz. Alle Rechte für den Fall der Patenterteilung oder GM-Eintragung vorbehalten.

Copying of this document, and giving it to others and the use or communication of the contents thereof, are forbidden without express authority. Offenders are liable to the payment of damages. All rights are reserved in the event of the grant of a patent or the registration of a utility model or design.

Table 7: Top Up Mode SLRC Setup – regulation parameters

Settable Parameters:	***Description:***
V19 Offset	Valve opening offset value *(valve specific parameter)* The valve will never close below this value. This parameter usually is small (<5) and prevents pressurized gaseous nitrogen to build up in the supply line.
Gain Err.	In case the Val.Error value is less than or even as the set Gain Err. the proportional factor Gain 1 is used for the valve control. In case of Val.Error > Gain Err., Gain 2 is used. This is to react on variable power loads and allows the valve to open more in case of large power consumption.
Gain 1	Technical parameter used in case Gain Err. ≤ Val.Error
Gain 1	Technical parameter used in case Gain Err. > Val.Error
Int. Time	Integration time for LT19 level calculation
Displayed Parameters:	***Description:***
Int. T. Act	Integration time counter
Int. T. Val	Actual measured Value of the Filling level (*integrated over the set Int. Time*)
Val. Error	Difference between Set- Level and Actual value *(Int. T. Val)*

Weitergabe sowie Vervielfältigung dieser Unterlage, Verwertung und Mitteilung ihres Inhaltes sind nicht gestattet, soweit nicht ausdrücklich zugestanden. Zuwiderhandlungen verpflichten zu Schadenersatz. Alle Rechte für den Fall der Patenterteilung oder GM-Eintragung vorbehalten.

Copying of this document, and giving it to others and the use or communication of the contents thereof, are forbidden without express authority. Offenders are liable to the payment of damages. All rights are reserved in the event of the grant of a patent or the registration of a utility model or design.

3.4.6 Operator Mode

Within the operator Mode you will find three new buttons for automatic functions (see Figure 13):

a) Warm up (chapter 5.3.1.2)
b) Cool down (chapter 5.3.1.1)
c) Refill of the heater Vessel (chapter 5.3.1.3)

Prior to select one of these automatic procedures please read the related chapters in this document.

Figure 13: Operator mode window

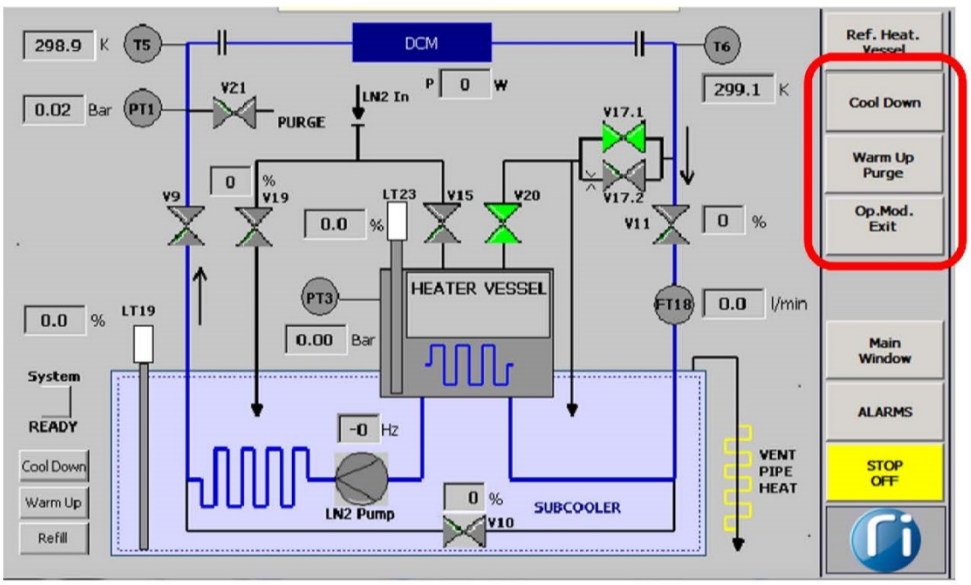

To exit the operator mode (or the expert mode), hit the "Op. Mod. EXIT" ("Exp. Mod. EXIT") button. Enter the password and select the "Op. Mod. EXIT" ("Exp. Mod. EXIT") button again. Now the window shown in Figure 9 opens up again and you are able to select either the expert or operator mode.

Weitergabe sowie Vervielfältigung dieser Unterlage, Verwertung und Mitteilung ihres Inhaltes sind nicht gestattet, soweit nicht ausdrücklich zugestanden. Zuwiderhandlungen verpflichten zu Schadenersatz. Alle Rechte für den Fall der Patenterteilung oder GM-Eintragung vorbehalten.

Copying of this document, and giving it to others and the use or communication of the contents thereof, are forbidden without express authority. Offenders are liable to the payment of damages. All rights are reserved in the event of the grant of a patent or the registration of a utility model or design.

4 Commissioning of the cryocooler system

Prior to operation there are some precautions to make which are described in the following.

4.1 How to prepare the system for commissioning

Before starting with the commissioning please check, that:

- Both temperature readings (T5, T6) show ambient temperature;
- Both pressure readings (PT1, PT3) of the closed loop show zero bar for atmospheric pressure to make sure the sensors work properly.

After checking the conditions please:

- Open and close each valve to check if the system is ready for commissioning.

If the temperature, pressure and valve conditions are ok, the cryocooler is ready for commissioning.

Weitergabe sowie Vervielfältigung dieser Unterlage, Verwertung und Mitteilung ihres Inhaltes sind nicht gestattet, soweit nicht ausdrücklich zugestanden. Zuwiderhandlungen verpflichten zu Schadenersatz. Alle Rechte für den Fall der Patenterteilung oder GM-Eintragung vorbehalten.

Copying of this document, and giving it to others and the use or communication of the contents thereof, are forbidden without express authority. Offenders are liable to the payment of damages. All rights are reserved in the event of the grant of a patent or the registration of a utility model or design.

4.1.1 Purging of the cryocooler and the closed loop system

To free the system from any moisture is mandatory before starting to fill the closed loop with liquid nitrogen. For this purpose the whole system has to be purged with dry nitrogen gas prior to cool down.

There are two options to connect a dry nitrogen supply to the cryocooler system for the purpose of venting. Either the manually operated ball valve on top of the heater vessel or the purge-in flange (both shown at Figure 14) can be selected. A recommended purging procedure is given below for the example of using the purge-in valve (V21).

Figure 14: Manuallly operated ball valve (left) and purge-in (right)

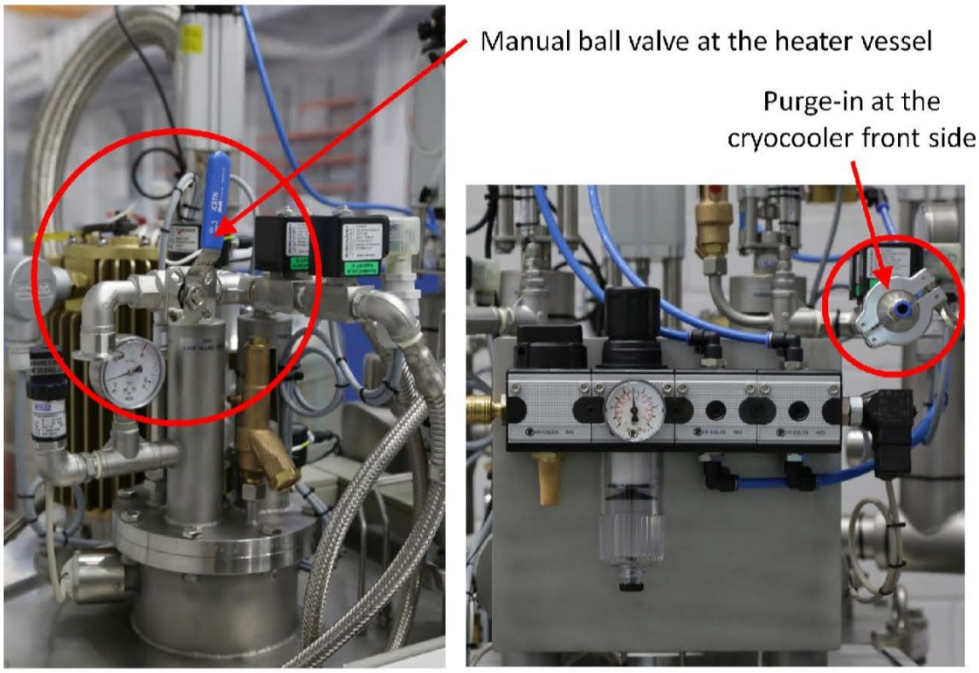

Weitergabe sowie Vervielfältigung dieser Unterlage, Verwertung und Mitteilung ihres Inhaltes sind nicht gestattet, soweit nicht ausdrücklich zugestanden. Zuwiderhandlungen verpflichten zu Schadenersatz. Alle Rechte für den Fall der Patenterteilung oder GM-Eintragung vorbehalten.

Copying of this document, and giving it to others and the use or communication of the contents thereof, are forbidden without express authority. Offenders are liable to the payment of damages. All rights are reserved in the event of the grant of a patent or the registration of a utility model or design.

For purging the system adhere to the following procedure:

- Initial conditions:
  - All supply and transfer lines have been connected to the cryocooler system including the connections between the cryocooler and the consumer.
  - Connecting the liquid nitrogen supply (LN2) to the cryocooler at this point is optional. If the LN2 feed line is connected to the cryocooler it has to be closed;
  - All electrical connections are established;
  - Pressurized air supply has been connected to the cryocooler;
  - The control system has been turned on and is set to expert mode.
- Set the pressure reducer of the dry nitrogen supply gas to < 3 bar (min 1.5 bar);
- Close all valves;
- Connect the dry nitrogen to the purge-in flange shown in Figure 14;
- Now purge several paths of the closed loop with the recommended lengths of time as described in the following:

1. purging pathway (~45 min):
   i. Open V21
   ii. Open V17.1 and V17.2
   iii. Open V20 (optional)

Figure 15: Purging pathway no. 1

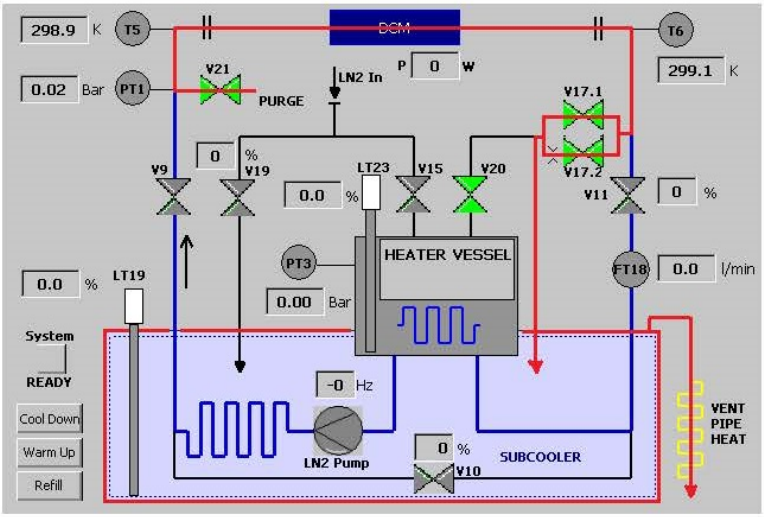

Weitergabe sowie Vervielfältigung dieser Unterlage, Verwertung und Mitteilung ihres Inhaltes sind nicht gestattet, soweit nicht ausdrücklich zugestanden. Zuwiderhandlungen verpflichten zu Schadenersatz. Alle Rechte für den Fall der Patenterteilung oder GM-Eintragung vorbehalten.

Copying of this document, and giving it to others and the use or communication of the contents thereof, are forbidden without express authority. Offenders are liable to the payment of damages. All rights are reserved in the event of the grant of a patent or the registration of a utility model or design.

2. purging pathway (~45 min):
   i. Close V17.1 and V17.2
   ii. Open V11
   iii. Open V15 (*the LN2 feed line hast to be closed!*)
   iv. Open V19
   v. Close V20

Figure 16: Purging pathway no. 2

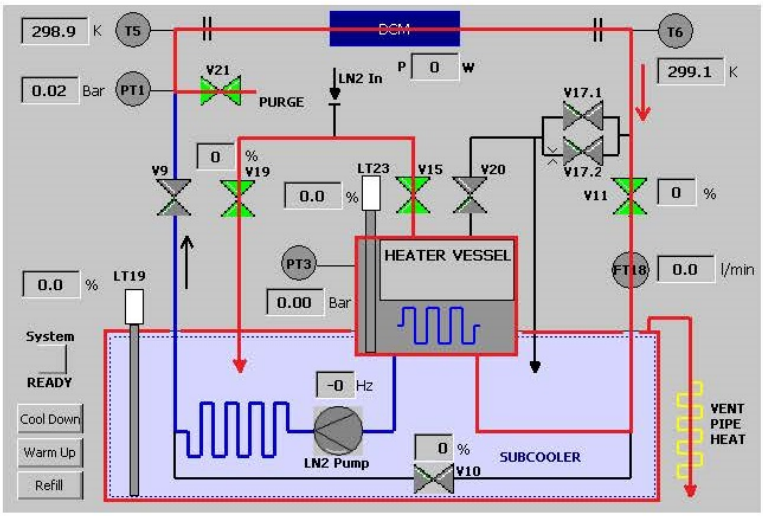

Weitergabe sowie Vervielfältigung dieser Unterlage, Verwertung und Mitteilung ihres Inhaltes sind nicht gestattet, soweit nicht ausdrücklich zugestanden. Zuwiderhandlungen verpflichten zu Schadenersatz. Alle Rechte für den Fall der Patenterteilung oder GM-Eintragung vorbehalten.

Copying of this document, and giving it to others and the use or communication of the contents thereof, are forbidden without express authority. Offenders are liable to the payment of damages. All rights are reserved in the event of the grant of a patent or the registration of a utility model or design.

3. purging pathway (~45 min):
   i. Close V15
   ii. Close V19
   iii. Close V11
   iv. Open V9
   v. Open V20

Figure 17: Purging pathway no. 3

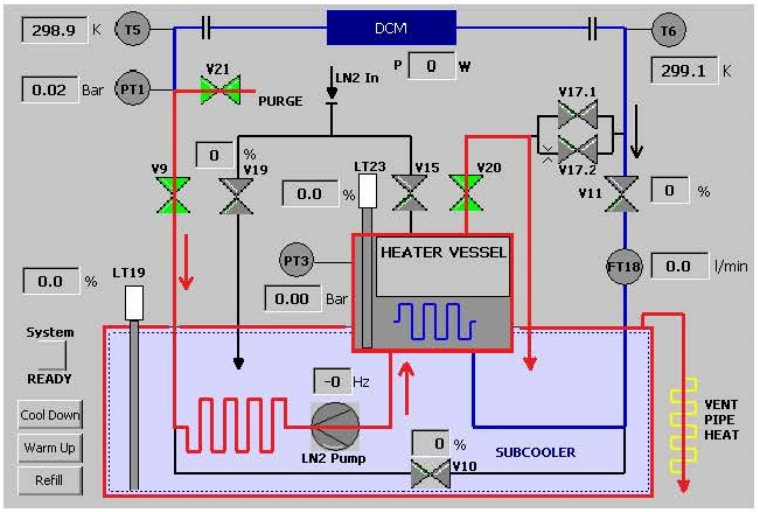

4. purging pathway (~30 min):
   i. As no.3 but with additionally opened bypass valve V10

- After purging all pathways close all valves.

Weitergabe sowie Vervielfältigung dieser Unterlage, Verwertung und Mitteilung ihres Inhaltes sind nicht gestattet, soweit nicht ausdrücklich zugestanden. Zuwiderhandlungen verpflichten zu Schadenersatz. Alle Rechte für den Fall der Patenterteilung oder GM-Eintragung vorbehalten.

Copying of this document, and giving it to others and the use or communication of the contents thereof, are forbidden without express authority. Offenders are liable to the payment of damages. All rights are reserved in the event of the grant of a patent or the registration of a utility model or design.

4.1.2 Checking for leaks

Pressurize the system by opening V9, V11, V10 and V21 with dry N2 up to 3 bar; V17.1/.2, V15, and V19 are closed. Close V21 and check for a possible pressure drop. The pressure should stay stable for at least 1 hour (no indicated pressure drop on the gauge).

4.1.3 Nitrogen gas connections

For a save operation of the system the nitrogen supply lines should always be connected at valve V21.

Danger: Cryogenic Liquid
Do not open V21 in case the closed loop is pressurised and LN2 is in the systems. LN2 might splash into the area. Please make sure you wear gloves and safety glasses while handling cryogenic equipment. Please follow your local safety regulations, too.

4.1.4 Turn on the exhaust heater

During the operation of the system in particular with heat load, a lot of liquid nitrogen will be evaporated by the exhaust pipe. This cold nitrogen gas might cause icing at the exhaust of the pipe. Therefore the pipe is heated. Turn on the heater using the active area "VENT PIPE HEAT" at the touch panel (see Figure 11). The exhaust pipe is equipped with a heater wire.

Warning: Hot surface
In case the temperature controller does not operate properly, temperatures up to 200°C can be achieved at this location.

The temperature set point at the heater wire can be adjusted at the temperature controller of the exhaust pipe (see Figure 18**Fehler! Verweisquelle konnte nicht gefunden werden.**). Press "P" to get into the SP (set point) mode. "SP" and the set point temperature will blink alternating. The temperature can now be set via the narrow buttons to the right side of the display. To show the actual temperature, leave the SP mode by clicking "SP" again.

Weitergabe sowie Vervielfältigung dieser Unterlage, Verwertung und Mitteilung ihres Inhaltes sind nicht gestattet, soweit nicht ausdrücklich zugestanden. Zuwiderhandlungen verpflichten zu Schadenersatz. Alle Rechte für den Fall der Patenterteilung oder GM-Eintragung vorbehalten.

Copying of this document, and giving it to others and the use or communication of the contents thereof, are forbidden without express authority. Offenders are liable to the payment of damages. All rights are reserved in the event of the grant of a patent or the registration of a utility model or design.

For safety reasons, never set a temperature above 40°C. In standard operation the temperature should be set to 10°C to 20°C. The set point in Figure 18 has been set to 20°C, an active heater will be indicated by the white signal light (Heating On).

Figure 18: Changing the temperature set point at the vent pipe heater

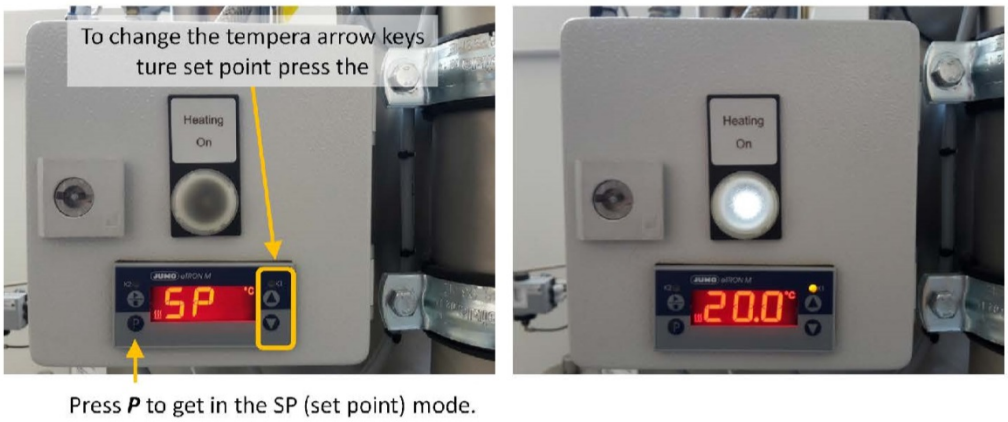

4.1.5 Connect the LN2 supply to the cryo-system

Connect the local LN2 supply (dewar, ring line, etc.) to the interface at the cryocooler. The pressure in the ring line should be > 1 bar and < 4 bar. Before connecting, please make sure the supply line is dry and purged with nitrogen gas.

Danger: Cryogenic Liquid

The cryogenic liquids used to cool down the equipment could damage persons severely. Appropriate safety equipment for handling cryogenic liquids has to be provided by the operator. Please make sure you wear gloves and glasses while handling cryogenic equipment. Please also follow your local safety regulations.

Weitergabe sowie Vervielfältigung dieser Unterlage, Verwertung und Mitteilung ihres Inhaltes sind nicht gestattet, soweit nicht ausdrücklich zugestanden. Zuwiderhandlungen verpflichten zu Schadenersatz. Alle Rechte für den Fall der Patenterteilung oder GM-Eintragung vorbehalten.

Copying of this document, and giving it to others and the use or communication of the contents thereof, are forbidden without express authority. Offenders are liable to the payment of damages. All rights are reserved in the event of the grant of a patent or the registration of a utility model or design.

5 Operating the cryocooler

5.1 The Stop / Stop Off Functions

5.1.1 The Stop Function

In order to bring the cryocooler into its default state (i.e. all valves closed, VV10 100% open, LN2 pump set to 30Hz, pressure off) press the "STOP PFF" button shortly (< 1 sec.).

The stop function becomes active in case an alarm trigger is activated.

The "READY" signal for the beamline interlock will be disabled.

Warning: Over pressure condition
In case the stop function is active, the consumer is isolated. The liquid nitrogen in the transfer lines and the consumer will warm up by itself and overpressure might activate the pressure safety valves of the closed loop and/or the heater vessel. It will be blown into the surrounding atmosphere.

5.1.2 The Stop Off Function

To activate the stop off function press the "STOP OFF" button for > 2 sec. The stop off function is similar to the stop function, but additionally the release valves V17.1 and V20 will be opened and the LN2 pump will set off. V17.1 and V20 are opened to prevent over-pressure within the closed loop.

5.2 Operating the cryocooler in expert mode

The operating conditions of the closed loop system depend on the pressure drop at the consumer and the power absorbed by the fluid in the optical element.

Weitergabe sowie Vervielfältigung dieser Unterlage, Verwertung und Mitteilung ihres Inhaltes sind nicht gestattet, soweit nicht ausdrücklich zugestanden. Zuwiderhandlungen verpflichten zu Schadenersatz. Alle Rechte für den Fall der Patenterteilung oder GM-Eintragung vorbehalten.

Copying of this document, and giving it to others and the use or communication of the contents thereof, are forbidden without express authority. Offenders are liable to the payment of damages. All rights are reserved in the event of the grant of a patent or the registration of a utility model or design.

5.2.1 Description of the manual procedures

5.2.1.1 How to fill the subcooler manually

For filling the subcooler, please be aware of, that:

- An integrated high level alarm prevents an overfilling of the subcooler. This alarm is set to 94% filling level.
- In addition the expert can set a high limit (HL) value. Make sure this value is set to a value smaller than the alarm level of 94%.

To fill the subcooler:

- Open V19
- The filling stops if V19 is closed or if the level reaches the high limit value.

It will take a few minutes until liquid nitrogen enters the system!

After 10 - 15 minutes you will notice the first indication at the filling level at the level indicator of the subcooler.

Fill the subcooler to at least 15% (a value of 30% is recommended).

Danger: Risk of suffocation
Ensure that the ventilation system of the building is sufficient to avoid oxygen deficiency. Install an oxygen deficiency warning system if required.

5.2.1.2 How to fill the heater vessel manually

To fill the heater vessel do the following steps:

1. Open valve V19 for 30 seconds;
2. Close valve V19;
3. Open valves V15 and V20 *(It might take 5-10 minutes until the level increases.);*
4. If the desired level is achieved, close V20 and V15 again.

Weitergabe sowie Vervielfältigung dieser Unterlage, Verwertung und Mitteilung ihres Inhaltes sind nicht gestattet, soweit nicht ausdrücklich zugestanden. Zuwiderhandlungen verpflichten zu Schadenersatz. Alle Rechte für den Fall der Patenterteilung oder GM-Eintragung vorbehalten.

Copying of this document, and giving it to others and the use or communication of the contents thereof, are forbidden without express authority. Offenders are liable to the payment of damages. All rights are reserved in the event of the grant of a patent or the registration of a utility model or design.

5.2.1.3 How to cool down the component

Caution
Read the full chapter prior to start the filling of the closed loop. This chapter contains important information to make sure you will successfully cool down the closed loop.

Before proceeding with filling the closed loop system do the following checks:

- Make sure the subcooler is filled at least 30% or start filling the subcooler;
- Make sure the closed loop has been purged;
- Turn on the exhaust heater;
- Make sure Valves V9, V10, V11, V15, V17.1/.2, V19, V20 and V21 are closed.
- Make sure the LN2 supply is connected to the supply line and under pressure (≈ 1 - 4 bar)
- Make sure the pressure control is turned off

After the checks proceed as described in the following:

1. Set the bypass valve (V10) to 60%;
2. Open V19 for at least 60 seconds to make sure no air is in the supply line;
3. Close V19 and open V15 and V20;
4. Fill the heater vessel to 90% (at a filling level of ~ 5% turn on the liquid nitrogen pump and set frequency to 30 Hz);
5. Close V15 and V20;
6. Open V9 and V17.1;
7. Check if V10 is set to 60%.

In case the nitrogen level in the heater vessel drops below 40 % please refill to 90% by closing V17.1 (the pump can continue running) and repeating the steps 2. - 6.

8. Wait until the temperature T6 in the return stream indicates a temperature below 90 K;
9. Close V17.1 and open V11 fully;
10. Wait until the temperature in the return line indicates a temperature below 82 K;
11. Turn on the closed loop pressure control and set the operating pressure by clicking in the active area (see Figure 11). Wait until the set pressure is reached for the first time.
12. If the filling level inside the heater vessel is higher than the operating filling level, then open V17.2. If the filling level is lower than the operating filling level, then refill the heater vessel up to the filling level + 20% and open V17.2.
13. Close V17.2. when the filling level inside the heater vessel has reached the operating filling level.

Warning: Risk of over pressure condition

Weitergabe sowie Vervielfältigung dieser Unterlage, Verwertung und Mitteilung ihres Inhaltes sind nicht gestattet, soweit nicht ausdrücklich zugestanden. Zuwiderhandlungen verpflichten zu Schadenersatz. Alle Rechte für den Fall der Patenterteilung oder GM-Eintragung vorbehalten.

Copying of this document, and giving it to others and the use or communication of the contents thereof, are forbidden without express authority. Offenders are liable to the payment of damages. All rights are reserved in the event of the grant of a patent or the registration of a utility model or design.

There is a chance of an over pressure condition and pressure relieve valves will open. This condition is caused by the amount of evaporated liquid nitrogen gas.

Caution: Stop Function
In case the filling level of the heater vessel drops below 5 % the stop function becomes active. (See chapter 5.1.1 for details) In this case V9, V11 will be closed and V10 will be opened fully. After a refill of the heater vessel, please make sure you open V9, V11 and V10 to 60% again.

Now the system switches into the READY state (indicated by "SYSTEM READY" turning green). It might take up to 6 hours until the pressure gets stable within ± 10 mbar.

5.2.2 Correct pressure in the closed loop

The closed loop system works with one phase subcooled liquid nitrogen. The temperature even in the back stream (T6) of the loop must be below the boiling point of liquid nitrogen. (Table 8 shows the boiling points of liquid nitrogen at 0 – 5 bar)

Table 8: Table of Overpressure and Temperature

Overpressure		Temperature	
(bar)	(PSI)	(K)	(°C-)
0	0	77	-196
1	14.5	84	-189
2	29	88	-185
3	43.5	91	-182
4	58	94	-179
5	72.5	96	-177

The pressure in the loop should be set to a higher value (+ 1 bar, 14.5 PSI) than required to be sure that no bubbles will appear. The LN2 consumption of the system rises with higher pressure. The pressure PT1 shall be at least 0.5 bar below the opening pressure of the safety valve (5 bar, optional 10 bar).

Weitergabe sowie Vervielfältigung dieser Unterlage, Verwertung und Mitteilung ihres Inhaltes sind nicht gestattet, soweit nicht ausdrücklich zugestanden. Zuwiderhandlungen verpflichten zu Schadenersatz. Alle Rechte für den Fall der Patenterteilung oder GM-Eintragung vorbehalten.

Copying of this document, and giving it to others and the use or communication of the contents thereof, are forbidden without express authority. Offenders are liable to the payment of damages. All rights are reserved in the event of the grant of a patent or the registration of a utility model or design.

5.2.3 Adjusting the flow rate (pump frequency)

The cooling power of the closed loop can be controlled by the flow rate (pump frequency). High flow rate means high cooling power and lower LN2 temperature in the loop. The pump frequency can be varied from 0 to 80 Hz. The flow rate (pump frequency) should only be set as high as really required because the LN2 consumption of the cryo-system increases and the pump lifetime decreases at high frequency operation.

5.2.4 Standard operating parameters without additional heat load

- V10 open at 40..60 %
- V11 open at 40..100 %
- Pressure set point: 2 bar
- Pump Frequency: 30..50 Hz
- Heater vessel filling level: 25..35 %
- Liquid Nitrogen consumption without thermal load 3 l/h. (plus nitrogen consumption caused by the heat load generated by the consumer)

5.2.5 Adjusting / Correction of the level in the heater vessel

After a long time operation (more than 4 weeks) a refill of the heater vessel might be necessary. A refill is necessary if the filling level drops 10 % below the set value for the heater vessel.

5.2.5.1 Decrease the liquid nitrogen level in the heater vessel

To reduce the liquid nitrogen level, please proceed as follows:

1. Open valve V17.1.;
2. Go back to the main window to check for the T23 level decrease;
3. If the desired filling level is achieved, close V17.1.

Weitergabe sowie Vervielfältigung dieser Unterlage, Verwertung und Mitteilung ihres Inhaltes sind nicht gestattet, soweit nicht ausdrücklich zugestanden. Zuwiderhandlungen verpflichten zu Schadenersatz. Alle Rechte für den Fall der Patenterteilung oder GM-Eintragung vorbehalten.

Copying of this document, and giving it to others and the use or communication of the contents thereof, are forbidden without express authority. Offenders are liable to the payment of damages. All rights are reserved in the event of the grant of a patent or the registration of a utility model or design.

5.2.5.2 Increasing the liquid nitrogen level in the heater vessel

To increase the liquid nitrogen level, please proceed as follows:

- Turn off the pressure control;
- Fill the heater vessel to required level + 20 % (refer to chapter 5.2.1.2 and 5.2.1.3);
- Turn on pressure control;
- Wait until set point is reached;
- Release LN2 as described in chapter 5.2.5.1.

5.2.6 Automatic refill of the subcooler

The control system is equipped with an automatic refill function. This function will automatically fill the subcooler once the minimum filling level is achieved. If this function is active, a manual refill is not necessary anymore. To enable the automatic refill function, press the touch panel at the position filling level control (see Figure 11).

Attention: In case the set value for the maximum filling level is by accident lower than the real filling level, you will not be able to open V19.

5.2.7 Isolating the consumer / warming up of the consumer

To warm up the consumer it is possible to separate the consumer cooling from the cryo-system.

To do so please proceed as described in the following:

1. Connect dry nitrogen gas (2 bar) to V21;
2. Press the STOP OFF button shortly < 1 sec. (V9 and V11 close; V10 opens fully; the LN2 pump runs at 30Hz);
3. Open V17.2;
4. Open V21 after the pressure PT1 < 1 bar;
5. Wait until the temperature T6 increases to 95 K (This might take up to a few hours, depending on the consumer);
6. Open V17.1;
7. Purge with dry nitrogen gas until each component of the system reaches ambient temperature;
8. Close V21;
9. Close V17.1.

It is possible to disconnect the transfer lines now.

Weitergabe sowie Vervielfältigung dieser Unterlage, Verwertung und Mitteilung ihres Inhaltes sind nicht gestattet, soweit nicht ausdrücklich zugestanden. Zuwiderhandlungen verpflichten zu Schadenersatz. Alle Rechte für den Fall der Patenterteilung oder GM-Eintragung vorbehalten.

Copying of this document, and giving it to others and the use or communication of the contents thereof, are forbidden without express authority. Offenders are liable to the payment of damages. All rights are reserved in the event of the grant of a patent or the registration of a utility model or design.

5.2.8 Operation parameter sets of the cryo-system

In expert mode you can view, save and change the operating parameters. By selecting the "Operation Parameter" button (see Figure 11) a window will open showing different parameter sets (see Figure 19).

Figure 19: Operation Parameter Menu

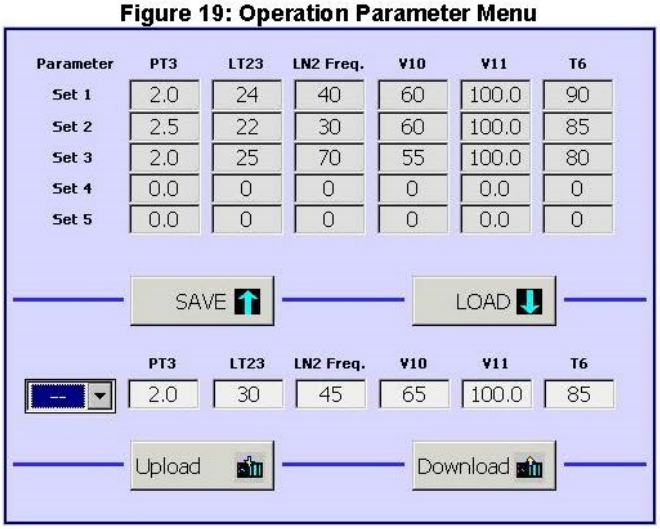

The following parameters of the cryo-system are affected:

- Pressure Set Point PT3
- Filling level of heater vessel LT23
- Pump frequency
- Valve opening V10
- Valve opening V11
- High limit of temperature return line T6

5.2.8.1 Save operating parameters into sets

To save parameters into one set you must change the according values in the bottom row. After you have changed those values you must choose in what set the values will be saved (see Figure 20).

Weitergabe sowie Vervielfältigung dieser Unterlage, Verwertung und Mitteilung ihres Inhaltes sind nicht gestattet, soweit nicht ausdrücklich zugestanden. Zuwiderhandlungen verpflichten zu Schadenersatz. Alle Rechte für den Fall der Patenterteilung oder GM-Eintragung vorbehalten.

Copying of this document, and giving it to others and the use or communication of the contents thereof, are forbidden without express authority. Offenders are liable to the payment of damages. All rights are reserved in the event of the grant of a patent or the registration of a utility model or design.

Figure 20: How to save operating parameters into sets

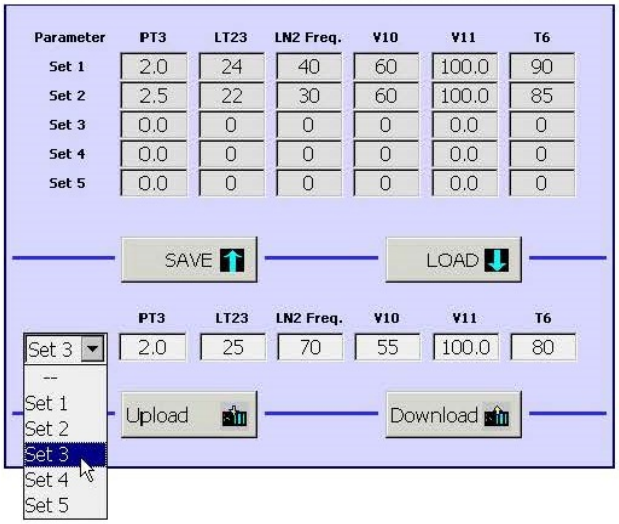

When you have selected one set, you can press the "SAFE" button. The entered values will then show up in the according row (see Figure 21).

Figure 21: Saved sets of operating parameters

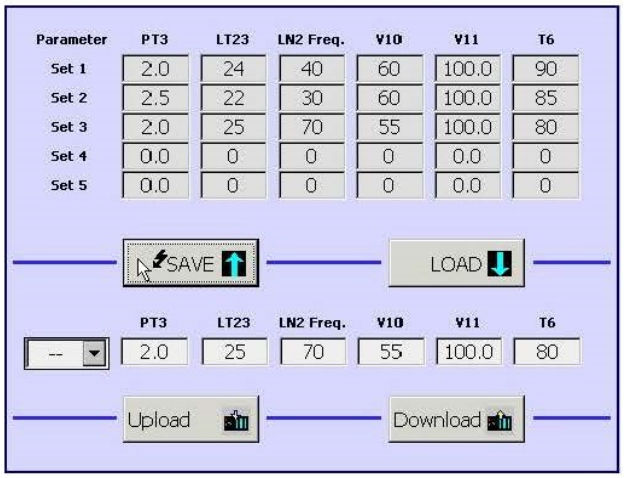

Weitergabe sowie Vervielfältigung dieser Unterlage, Verwertung und Mitteilung ihres Inhaltes sind nicht gestattet, soweit nicht ausdrücklich zugestanden. Zuwiderhandlungen verpflichten zu Schadenersatz. Alle Rechte für den Fall der Patenterteilung oder GM-Eintragung vorbehalten.

Copying of this document, and giving it to others and the use or communication of the contents thereof, are forbidden without express authority. Offenders are liable to the payment of damages. All rights are reserved in the event of the grant of a patent or the registration of a utility model or design.

5.2.8.2 Load a parameter set into bottom row

To load a parameter set into the active row you must select the according set in the bottom row and press the "LOAD" button. The set parameters will then show up in the bottom row (see Figure 22).

Figure 22 How to load sets of operating parameters

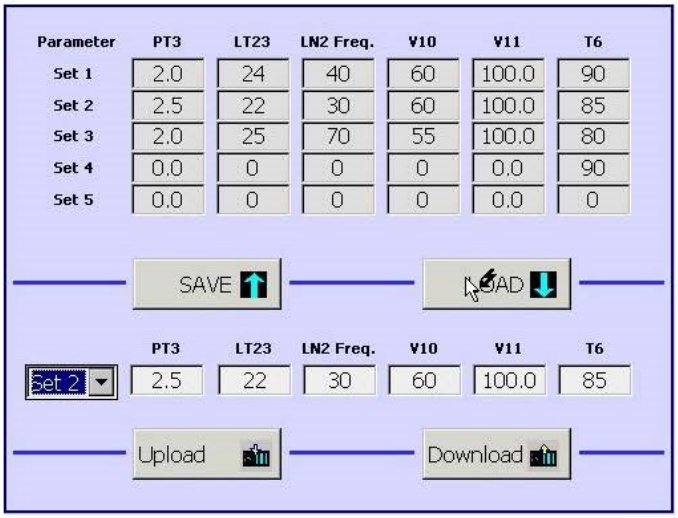

5.2.8.3 Download current operating parameters from cryocooler

To view the current values the cryo-system is operating with, you must press the "DOWNLOAD" button and the parameters will show up in the bottom row. If you want to save these values into one set, you can proceed as described in chapter 5.2.8.1.

5.2.8.4 Upload parameters from bottom row onto the cryocooler

To upload one set of parameters onto the cryo-system you must either change the values shown in the bottom row or can load a parameter set into the bottom row as described in chapter 5.2.8.2 and then press the "UPLOAD" button.

If the cryocooler is in ready mode, the parameters pressure set point PT3, pump frequency, valve opening V10, valve opening V11 and high temperature T6 will be changed immediately after pressing the "UPLOAD" button. The filling level LT23 will be set to the changed value but the actual

Weitergabe sowie Vervielfältigung dieser Unterlage, Verwertung und Mitteilung ihres Inhaltes sind nicht gestattet, soweit nicht ausdrücklich zugestanden. Zuwiderhandlungen verpflichten zu Schadenersatz. Alle Rechte für den Fall der Patenterteilung oder GM-Eintragung vorbehalten.

Copying of this document, and giving it to others and the use or communication of the contents thereof, are forbidden without express authority. Offenders are liable to the payment of damages. All rights are reserved in the event of the grant of a patent or the registration of a utility model or design.

filling level will only be changed to the new required level when starting an automatic cool down or the automatic refill procedure of the heater vessel.

5.3 Operating the cryocooler in Operator Mode

5.3.1 Description of the automatic procedures

Within the new GUI the automatic functions have been introduced. These automatic functions will operate the valves individually and do not need operator intervention. See chapter 3.4.1 how to login and operate the automatic procedures. Basically 3 functions are available:

- Automatic cool down
- Automatic warm up
- Automatic refill of the heater vessel

All 3 functions are explained in the following chapters in detail. The automatic procedures can be aborted by hitting shortly the stop button (< 2 sec.)

5.3.1.1 Automatic cool down

The automatic cool down procedure enables a cool down of the consumer component without the interaction of the operator.
Prior to the selection of the "Automatic Cool Down", the following status of the system has to be achieved:

- A full liquid nitrogen dewar (≥ 500 l) or a liquid nitrogen ring line has to be connected to the closed loop system;
- The subcooler should be filled to at least 15% (30% are recommended) and automatic refill has to be turned on;
- The transfer lines and the crystal have to be purged with dry nitrogen to make sure there is no trapped air inside the closed loop.

During automatic cool down:

- The exhaust heater will be turned on;
- The heater vessel will be filled with liquid nitrogen;
- The consumer component will be cooled down to 78 K;
- The correct filling level inside the heater vessel will be adjusted;
- The pressure control will be turned on;
- A ready signal will be generated.

Weitergabe sowie Vervielfältigung dieser Unterlage, Verwertung und Mitteilung ihres Inhaltes sind nicht gestattet, soweit nicht ausdrücklich zugestanden. Zuwiderhandlungen verpflichten zu Schadenersatz. Alle Rechte für den Fall der Patenterteilung oder GM-Eintragung vorbehalten.

Copying of this document, and giving it to others and the use or communication of the contents thereof, are forbidden without express authority. Offenders are liable to the payment of damages. All rights are reserved in the event of the grant of a patent or the registration of a utility model or design.

5.3.1.2 Automatic warm up

The automatic warm-up procedure warms the consumer up to ambient temperature and maintains the closed loop cryocooler ready for the next cool down procedure.
Prior to use the automatic warm-up procedure, the closed loop system should be in a closed loop operation and the consumer is cooled by liquid nitrogen.
Make sure dry N2 is connected to V21 > 1bar.
In case the automatic warm-up is selected, the following action will be executed:

- Forward and return valve (V9 and V11) will be closed;
- Valve V17.2 will be opened;
- As soon as the pressure in the transfer lines and the consumer is below 1 bar, V21 opens;
- The system will be purged and warmed up until the return temperature T6 reaches 280 K.

Caution:
Please make sure a nitrogen compressed gas line is connected to the purge port at V21. Otherwise liquid nitrogen might leave the system.

5.3.1.3 Automatic refill of the heater vessel

In case the heater vessel filling level drops 5% below the supposed filling level after a long time of operation, it makes sense to refill the heater vessel to the supposed level for best performance.

Prior to operate the automatic refill, please make sure:

- A liquid nitrogen dewar vessel (≥ 500 l) with a filling pressure of 1-4 bar or a ring line with a pressure of 1-4 bar is connected to the cryo-system;
- If needed, close the shutter to the beamline since there will be pressure oscillations inside the liquid nitrogen circuit. In case the system is not sensitive to pressure oscillations inside the liquid nitrogen circuit, please feel free to continue operation.

The auto refill will execute the following actions:

- Turn off the pressure control;
- Open V15 and V20 until the proper filling level is reached;
- Turn on the pressure control.

Weitergabe sowie Vervielfältigung dieser Unterlage, Verwertung und Mitteilung ihres Inhaltes sind nicht gestattet, soweit nicht ausdrücklich zugestanden. Zuwiderhandlungen verpflichten zu Schadenersatz. Alle Rechte für den Fall der Patenterteilung oder GM-Eintragung vorbehalten.

Copying of this document, and giving it to others and the use or communication of the contents thereof, are forbidden without express authority. Offenders are liable to the payment of damages. All rights are reserved in the event of the grant of a patent or the registration of a utility model or design.

5.4 Shut down of the cryocooler

5.4.1 Turn off procedure of the system

Bring the cryocooler into the off mode by pressing the "STOP OFF" button for more than two seconds. The system is now turned off and can warm up safely on its own. To accelerate the warming up of the closed loop you can purge the system as described in chapter 4.1.1 or by the automatic warm up, see chapter 5.3.1.2.

5.4.2 Draining of the subcooler

The following actions are necessary to make sure no overpressure in the closed loop system will be generated during draining of the subcooler:

- Isolate the consumer as described in chapter 5.2.7;
- Open V20 to release the pressure in the heater vessel;
- Open the ball valve when PT3 < 0.1 bar;
- Close V20.

Use a drain pipe as shown on Figure 23 and install this pipe instead of the exhaust heater mounted to the subcooler (see Figure 24 to Figure 26).

Figure 23: Drain pipe

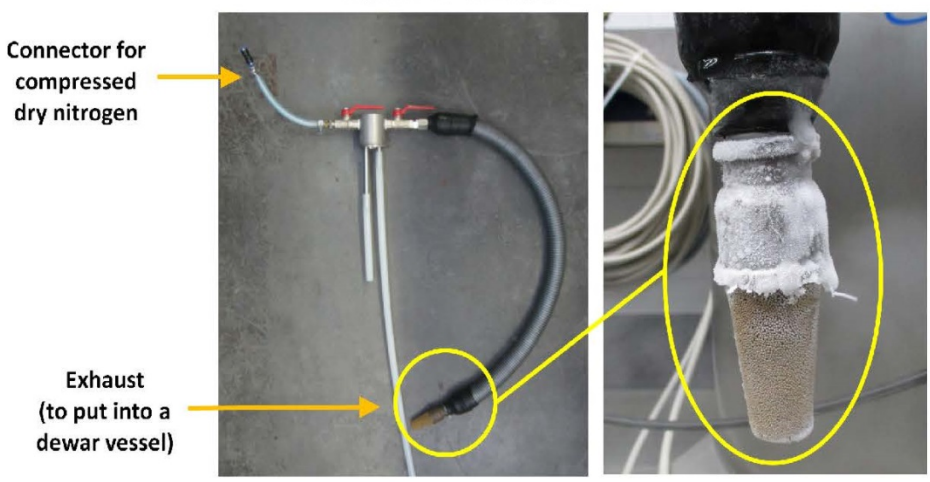

Weitergabe sowie Vervielfältigung dieser Unterlage, Verwertung und Mitteilung ihres Inhaltes sind nicht gestattet, soweit nicht ausdrücklich zugestanden. Zuwiderhandlungen verpflichten zu Schadenersatz. Alle Rechte für den Fall der Patenterteilung oder GM-Eintragung vorbehalten.

Copying of this document, and giving it to others and the use or communication of the contents thereof, are forbidden without express authority. Offenders are liable to the payment of damages. All rights are reserved in the event of the grant of a patent or the registration of a utility model or design.

Danger: Cryogenic Liquid

The cryogenic liquids coming out of the drain pipe could severely damage persons. Appropriate safety equipment for handling cryogenic liquids has to be provided by the operator. Please make sure you wear gloves and glasses while handling cryogenic equipment. Please follow your local safety regulations, too.

Figure 24: Exhaust pipe heater and vent valve connections

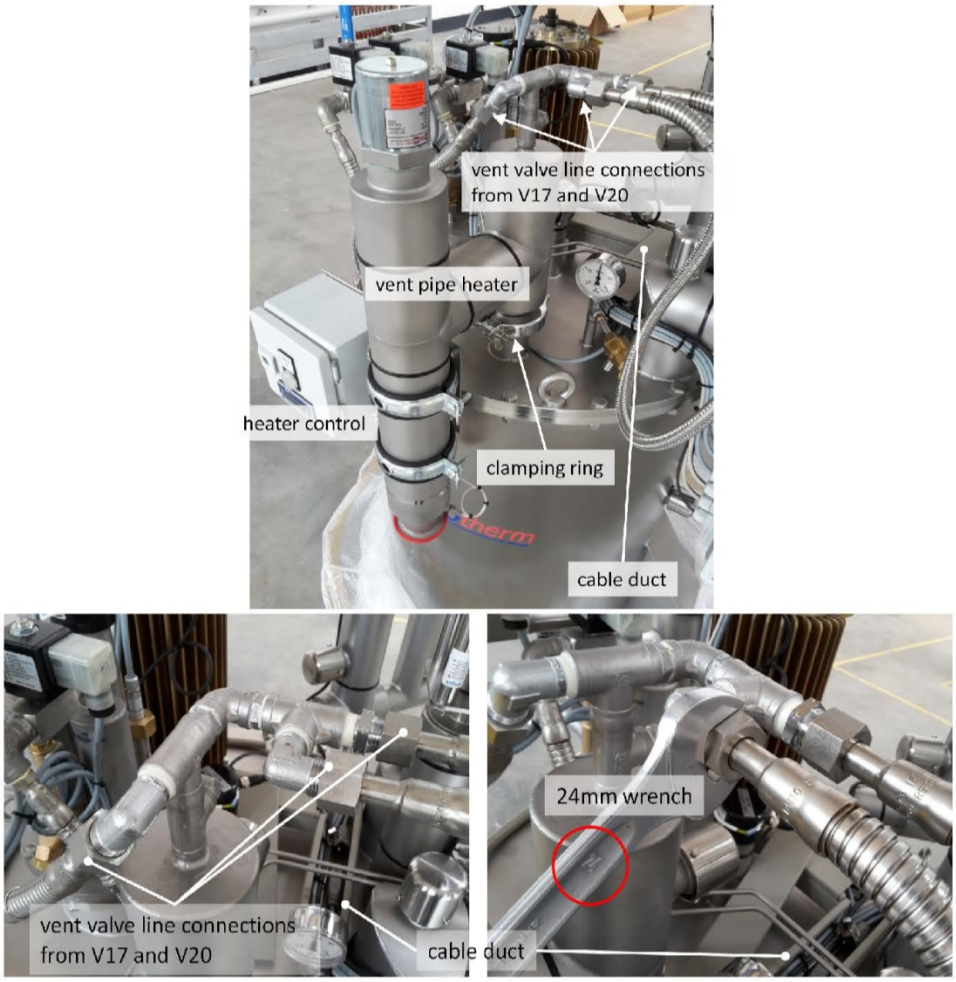

Weitergabe sowie Vervielfältigung dieser Unterlage, Verwertung und Mitteilung ihres Inhaltes sind nicht gestattet, soweit nicht ausdrücklich zugestanden. Zuwiderhandlungen verpflichten zu Schadenersatz. Alle Rechte für den Fall der Patenterteilung oder GM-Eintragung vorbehalten.

Copying of this document, and giving it to others and the use or communication of the contents thereof, are forbidden without express authority. Offenders are liable to the payment of damages. All rights are reserved in the event of the grant of a patent or the registration of a utility model or design.

To remove the exhaust pipe heater, please remove the flexible tube coming from the closed loop vent valves (V17.1 and V17.2) and the flexible tube coming from the heater vessel vent valve (V20). Disconnect the electrical connector of the heater. It is hidden underneath the cable tray (see Figure 25).

Figure 25: Position of the electrical connector, hidden underneath the cable tray

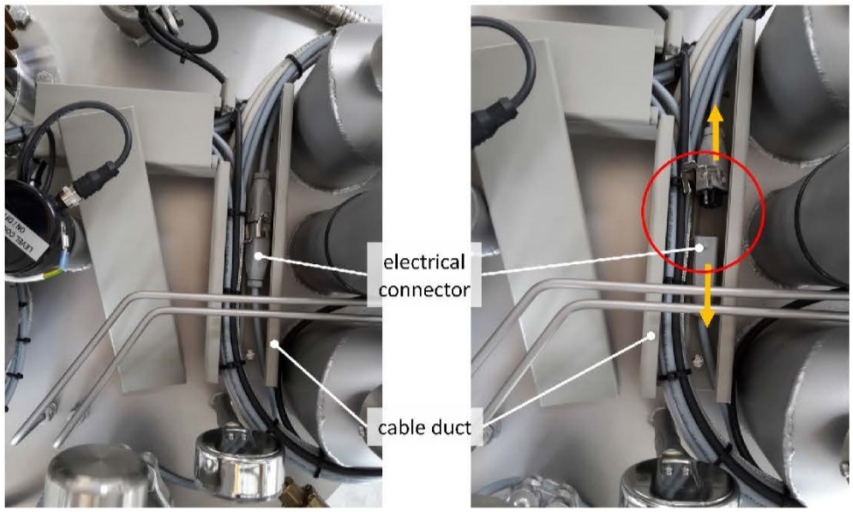

Adapt the drain pipe instead of the exhaust pipe heater as shown in Figure 26.

Weitergabe sowie Vervielfältigung dieser Unterlage, Verwertung und Mitteilung ihres Inhaltes sind nicht gestattet, soweit nicht ausdrücklich zugestanden. Zuwiderhandlungen verpflichten zu Schadenersatz. Alle Rechte für den Fall der Patenterteilung oder GM-Eintragung vorbehalten.

Copying of this document, and giving it to others and the use or communication of the contents thereof, are forbidden without express authority. Offenders are liable to the payment of damages. All rights are reserved in the event of the grant of a patent or the registration of a utility model or design.

Figure 26: Drain pipe connected to the cryocooler

Compressed dry nitrogen gas and an empty separate storage dewar are required to drain the liquid nitrogen of the subcooler into a suitable storage dewar.

Connect the compressed nitrogen to the drain pipe and set the pressure regulator to 0.5 - 1 bar.

- Supply the compressed nitrogen to the subcooler and open the valve at the drain pipe (keep the pressure within the subcooler below 0.5 bar, since the safety valve starts to release pressure at this value);
- Drain the system for 12h to release the LN2 and also the cold nitrogen gas out of the subcooler.

Weitergabe sowie Vervielfältigung dieser Unterlage, Verwertung und Mitteilung ihres Inhaltes sind nicht gestattet, soweit nicht ausdrücklich zugestanden. Zuwiderhandlungen verpflichten zu Schadenersatz. Alle Rechte für den Fall der Patenterteilung oder GM-Eintragung vorbehalten.

Copying of this document, and giving it to others and the use or communication of the contents thereof, are forbidden without express authority. Offenders are liable to the payment of damages. All rights are reserved in the event of the grant of a patent or the registration of a utility model or design.

5.4.3 Draining the heater vessel

Drain the subcooler first (see section 5.4.2). The draining of the heater vessel system requires dry nitrogen for purging. Connect a tube DN25KF to the manually operated ball valve (see Figure 27). This ball valve is connected to the heater vessel.

Figure 27: Which ball valve to open manually

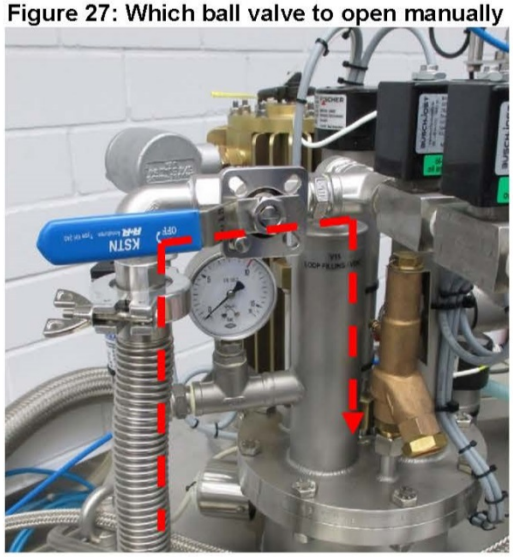

Make sure:

- The pressure control (heater) of the heater vessel is turned off;
- The liquid nitrogen pump is turned off.

To drain the closed loop, proceed as follows:

- Open the manually operated ball valve
- Open V20 and V10 fully;
- Hit the STOP OFF button shortly (< 2 sec.) – all valves will close and the pump will start running at 30 Hz;
- Purge for at least 6h with approx. 0.5 bar;
- To preserve the system against humidity, pressurize the heater vessel with approx. 0.5 - 1 bar N2;
- Close the ball valve.

Weitergabe sowie Vervielfältigung dieser Unterlage, Verwertung und Mitteilung ihres Inhaltes sind nicht gestattet, soweit nicht ausdrücklich zugestanden. Zuwiderhandlungen verpflichten zu Schadenersatz. Alle Rechte für den Fall der Patenterteilung oder GM-Eintragung vorbehalten.

Copying of this document, and giving it to others and the use or communication of the contents thereof, are forbidden without express authority. Offenders are liable to the payment of damages. All rights are reserved in the event of the grant of a patent or the registration of a utility model or design.

The system is ready to turn off the electrical power and to disconnect the transfer lines for packaging.

Danger: Cryogenic Liquid

Make sure no remaining liquid nitrogen is in the transfer lines while opening the flanges. Please make sure you wear gloves and glasses while handling cryogenic equipment. Please follow your local safety regulations, too.

In case overpressure is in the system please open V17.1 or V20 to relieve the overpressure.

Weitergabe sowie Vervielfältigung dieser Unterlage, Verwertung und Mitteilung ihres Inhaltes sind nicht gestattet, soweit nicht ausdrücklich zugestanden. Zuwiderhandlungen verpflichten zu Schadenersatz. Alle Rechte für den Fall der Patenterteilung oder GM-Eintragung vorbehalten.

Copying of this document, and giving it to others and the use or communication of the contents thereof, are forbidden without express authority. Offenders are liable to the payment of damages. All rights are reserved in the event of the grant of a patent or the registration of a utility model or design.

6 Troubleshooting

6.1 Warning and Alarms

In case operating parameters are out of range the system generates a warning or the stop function becomes active automatically under certain circumstances.
A warning or alarm will be indicated on the touch screen. The number of all current warnings and alarms is shown below the warning sign (see Figure 28).

To see details of the alarm, please press the alarm button at the touch screen. (See red arrow in Figure 29)

Figure 28: Where to find warning and alarms

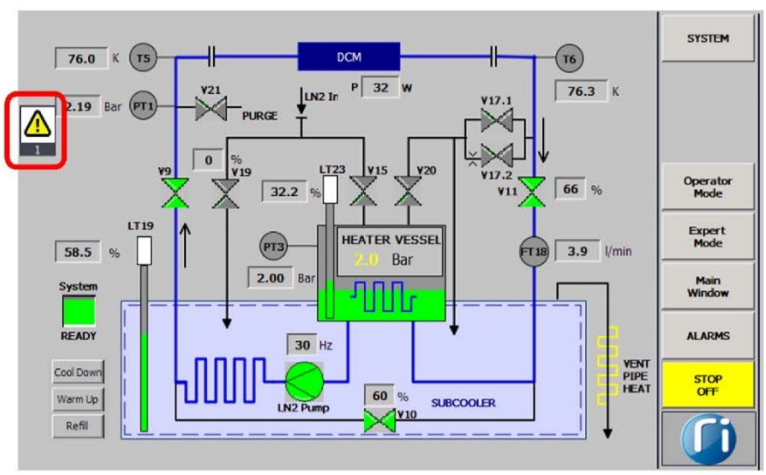

Once the ALARMS button is activated a second window will open up which provides the history of warnings and alarms. Please note, that not all warnings and alarms are necessarily indicating an actual problem as the history logs all occurred warnings and alarms since the last clearance.

To see only the warnings and alarms currently valid, clear the history by pressing the Quit-button (see Figure 29). The warning and alarms are listed with the according time and a brief description in the text field referring also to the parameter that caused the failure.

After the faulty condition is solved, the warning or alarm can be cleared by hitting the Quit-Button in the alarm window.

Weitergabe sowie Vervielfältigung dieser Unterlage, Verwertung und Mitteilung ihres Inhaltes sind nicht gestattet, soweit nicht ausdrücklich zugestanden. Zuwiderhandlungen verpflichten zu Schadenersatz. Alle Rechte für den Fall der Patenterteilung oder GM-Eintragung vorbehalten.

Copying of this document, and giving it to others and the use or communication of the contents thereof, are forbidden without express authority. Offenders are liable to the payment of damages. All rights are reserved in the event of the grant of a patent or the registration of a utility model or design.

Figure 29: Example Overview of warnings

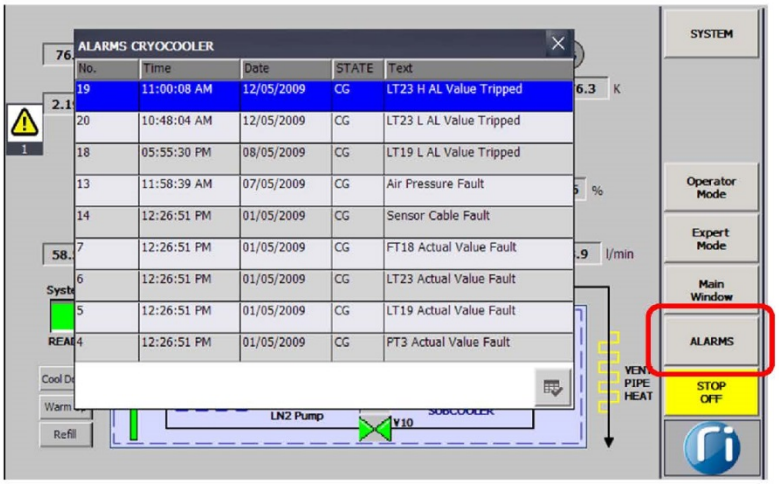

Caution: Experts required
Some components of the Cryo-System require electricians or persons familiar with pneumatics. Please make sure only well trained persons familiar with the repair of these components will execute the repair.

Please feel free to contact RI Research Instruments if you cannot solve the problem easily.

6.1.1 Icing on tubing or at the outside of the subcooler vessel

Ice on vacuum insulated tubing or the subcooler indicates a leakage or a loss of insulation vacuum. Please contact RI Research Instruments for an evacuation or a leak check of the related tubing.

Caution: Failure situation:
In case you will find ice on vacuum insulated tubing or at the outside of the subcooler, please turn off the Cryo-System and make sure it warms up safely as described in section 5.4

Weitergabe sowie Vervielfältigung dieser Unterlage, Verwertung und Mitteilung ihres Inhaltes sind nicht gestattet, soweit nicht ausdrücklich zugestanden. Zuwiderhandlungen verpflichten zu Schadenersatz. Alle Rechte für den Fall der Patenterteilung oder GM-Eintragung vorbehalten.

Copying of this document, and giving it to others and the use or communication of the contents thereof, are forbidden without express authority. Offenders are liable to the payment of damages. All rights are reserved in the event of the grant of a patent or the registration of a utility model or design.

6.1.2 Temperature does not drop during cool down

In case the temperature indicated at T5 does not drop down within 30 minutes, and the cool down procedure has been executed as described in section 5.2.1.3, step 9, please open V17.2 until the temperature indicated at T5 starts to drop down.

6.1.3 Valve V19 does not operate

6.1.3.1 Automatic refill operation

In case the set value for maximum filling level is by accident lower than the real filling level, you will not be able to open V19. Even if automatic refill is off you will not be able to open V19 if the real filling level is higher than the trigger value of the maximum filling level.

6.1.3.2 Icing on V19

Icing at the outside of V19 occurs during normal operation since there is no vacuum insulation. Icing inside the valve might block the valve operation. Do not remove the feed line from the liquid nitrogen supply if the feed line is at cryogenic temperature. Otherwise moisture may enter the feed line and cause icing at the feed valve. This might be the reason for the malfunction.

Possible repair:
Wait until the feed line and the valve is at ambient temperature. Please feel free to use a hot air blower at the outside of the valve to accelerate the warm up.

Caution:
Please make sure you do not damage the insulation of the cables or the housing of the valve while heating. Check if the valve is operational again.

In case the valve operates again at ambient temperature, please connect a dry nitrogen gas line to the fill line. Open V19 and purge the valve for 5 minutes using nitrogen gas. Connect the dewar again and start filling the subcooler.

Weitergabe sowie Vervielfältigung dieser Unterlage, Verwertung und Mitteilung ihres Inhaltes sind nicht gestattet, soweit nicht ausdrücklich zugestanden. Zuwiderhandlungen verpflichten zu Schadenersatz. Alle Rechte für den Fall der Patenterteilung oder GM-Eintragung vorbehalten.

Copying of this document, and giving it to others and the use or communication of the contents thereof, are forbidden without express authority. Offenders are liable to the payment of damages. All rights are reserved in the event of the grant of a patent or the registration of a utility model or design.

6.1.4 The cryocooler does not switch to ready state

If the cryocooler does not switch to ready state, please check the following conditions:

- V9 Open
- V11 Open
- Pressure Control "on"
- Nitrogen Pump "on"
- Heater Vessel Filling Level > 20%
- T5 < 80K

If one of these conditions is not fulfilled, the cryocooler will not switch to ready state.

7 Maintenance & Inspection

Under normal circumstances the Cryo Cooler requires no maintenance or servicing except of the circulation pump. For maintenance of the circulation pump please refer to the according manual in chapter 3.6.2 of the documentation.

If the cryocooler is not in use for a prolonged period, it will gradually warm up to ambient temperature. This causes moisture to condense on the cold container surface of the inner shell and tubes if they are open to atmosphere. This moisture can be removed by purging the container with dry nitrogen gas at room temperature.

If the cryocooler should be rendered unusable as a result of breaking the vacuum or another reason, it is advisable to return the container to the manufacturer for inspection and possible repair.

RI Research Instruments advises to perform the following test/maintenance procedures once per year. These tests shall be carried out by a trained and qualified person familiar with cryogenic equipment.

7.1 Pressure control test of the closed loop

To control the pressure of the closed loop, bring the closed loop in the following conditions:

- Pump 40%
- Open V10 to 60%
- Open V11 to 100%
- Set the pressure control to 2 bar
- Fill the heater vessel to the operating filling level
- Wait for 12h to stabilize the system
- There should be no change in the PT3 reading on the display over a timeframe of 1h

Weitergabe sowie Vervielfältigung dieser Unterlage, Verwertung und Mitteilung ihres Inhaltes sind nicht gestattet, soweit nicht ausdrücklich zugestanden. Zuwiderhandlungen verpflichten zu Schadenersatz. Alle Rechte für den Fall der Patenterteilung oder GM-Eintragung vorbehalten.

Copying of this document, and giving it to others and the use or communication of the contents thereof, are forbidden without express authority. Offenders are liable to the payment of damages. All rights are reserved in the event of the grant of a patent or the registration of a utility model or design.

The pressure control test should result in a pressure stability of ±10 mbar.

7.2 Leak-test of the closed loop system

To perform the leak-test, do the following steps:

- Note the LT23 level
- Wait 12h, note LT23 again
- Average deviation should be < 1-2%

7.3 Automatic restart test

This test simulates a power failure and makes sure the system powers up again safely into its normal operating conditions.

To perform the automatic restart test, perform the following steps:

- Switch off the main circuit breaker at the control rack.
- Wait 2 minutes and turn on the power again.

The system should automatically boot and continue its operation using the same parameters as before. In case a failure is observed, please contact RI Research Instruments.

7.4 Visual Inspection of the cryocooler

During the visual inspection you should check for:

- Icing at the valves and tubing (under normal operation no icing should be visible, only during refill procedure icing should be visible)
- Check for condensed water on top of the subcooler and heater vessel
- Check for icing at the vent pipe
- Check for visible damage at the cryocooler, cables and connectors
- Check the LN2 transfer lines for damages, over bending and icing at connections

These tests are to be performed with a warmed up cryocooler

Weitergabe sowie Vervielfältigung dieser Unterlage, Verwertung und Mitteilung ihres Inhaltes sind nicht gestattet, soweit nicht ausdrücklich zugestanden. Zuwiderhandlungen verpflichten zu Schadenersatz. Alle Rechte für den Fall der Patenterteilung oder GM-Eintragung vorbehalten.

Copying of this document, and giving it to others and the use or communication of the contents thereof, are forbidden without express authority. Offenders are liable to the payment of damages. All rights are reserved in the event of the grant of a patent or the registration of a utility model or design.

7.5 Leak test with consumer

To perform the leak test, perform the following steps:

- Open V9, V11, V10
- Close V15, V20, V19
- Switch the pump off
- Set the pressure control off
- Pressurise the closed loop via V21 with dry N2 up to 3bar
- Close V21 and disconnect the dry N_2
- Wait for 6h
- Control the pressure

A good working cryocooler should have a pressure drop less than 0.1 bar.

7.6 Leak test without consumer

To perform the leak test, perform the following steps:

- Pressurise the system as described above
- Isolate the consumer by closing V9 and V11
- Open V17.1 to release the pressure of the consumer line

A good working cryocooler should have a pressure drop at PT3 of less than 0.1 bar over a timeframe of 6h.

Weitergabe sowie Vervielfältigung dieser Unterlage, Verwertung und Mitteilung ihres Inhaltes sind nicht gestattet, soweit nicht ausdrücklich zugestanden. Zuwiderhandlungen verpflichten zu Schadenersatz. Alle Rechte für den Fall der Patenterteilung oder GM-Eintragung vorbehalten.

Copying of this document, and giving it to others and the use or communication of the contents thereof, are forbidden without express authority. Offenders are liable to the payment of damages. All rights are reserved in the event of the grant of a patent or the registration of a utility model or design.

-END-