REVISION HISTORY					
REV	DESCRIPTION	DATE	DESIGNER	CHECKED BY	ENGINEER
A	RELEASE PER ECO 003590	2/2016	J TUOZZOLO	CA/CS	F DEPAOLA

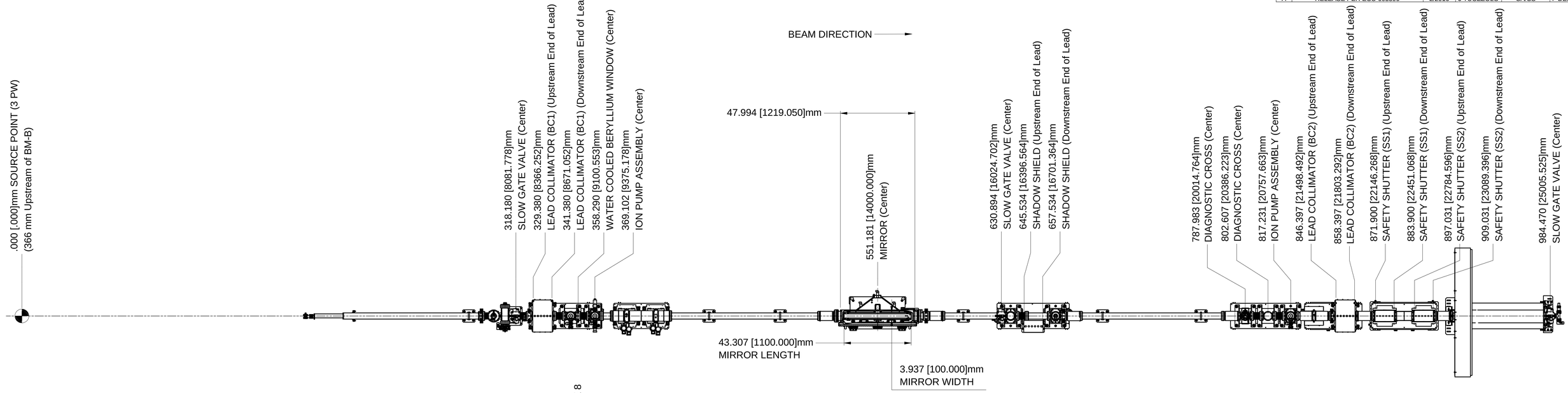

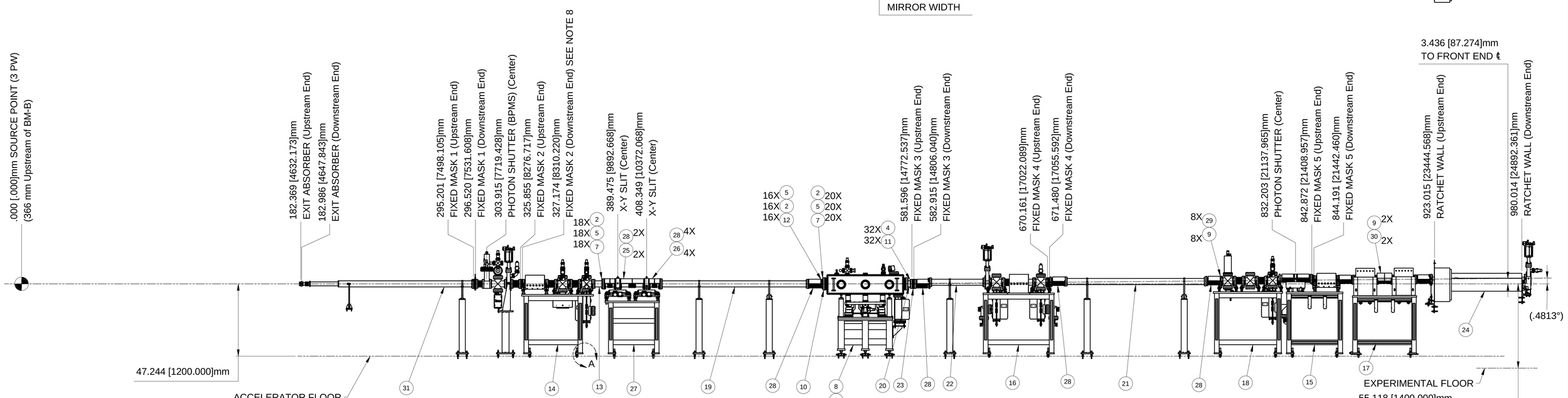

DETAIL A
SCALE 1 : 4

NOTES:

1. COMPONENTS LAYOUT AS PER RSI (LT-C-ASD-RSI-002 VERSION 3).
2. ALL ORDINATE DIMENSIONS ARE FROM SOURCE-PONT (3PW)
3. SEE SHEET 3 FOR SURVEY AND ALIGNMENT DIMENSIONS.
4. SEE SHEET 4 FOR COMPONENT HEIGHTS AND ALIGNMENT DIMENSIONS.
5. COMPONENT POSITION TOLERANCE OF ± .008 [.200] IN X AND Y DIRECTION AND ± .020 [.500] IN Z DIRECTION (BEAM DIRECTION)
6. REFERENCE WATER FLOW DIAGRAM SR-FE-3PW-UT-7000
7. REFERENCE AIR SCHEMATIC SR-FE-UT-0001
8. FOR SURVEY PURPOSES, USE FIXED MASK 2 TO ESTABLISH PRACTICAL FRAME

COMPONENT	RADIATOION SAFETY COMPONENT CHECKLIST	TOP OFF SAFETY SYSTEM
EXIT ABSORBER	X	X
FIXED MASK 2	X	X
LEAD COLLIMATOR 1	X	
SHADOW SHIELD	X	
FIXED MASK 5	X	
LEAD COLLIMATOR 2	X	
SAFETY SHUTTER 1	X	
SAFETY SHUTTER 2	X	
RATCHET WALL COLLIMATOR	X	

ITEM	QTY	PART NUMBER	DESCRIPTION	MATERIAL
31	1	SR-VA-CHM-6360	EXIT CHM SUBASSY, S6 , CELL 17	
30	2	SR-FE-SHLD-0002-02	BELLOWS SHIELD, 4.75" LONG	Aluminum, CORRUGATED
29	8	SR-FE-SHLD-0001-09	BELLOWS SHIELD, 8.17 lg.	Aluminum, CORRUGATED
28	4	SR-FE-BLW-0004	BELLOWS, 6" CF FLG	
27	1	SR-FE-3PW-SLT-2000	TABLE ASSEMBLY, SLIT-STAGE	
26	4	SR-FE-3PW-SHLD-0001-02	BELLOWS SHIELD, 3.86 lg.	
25	2	SR-FE-3PW-SHLD-0001-01	BELLOWS SHIELD, 8.17 lg.	
24	1	SR-FE-3PW-RCO-7000	RATCHET WALL COLLIMATOR, XFP	
23	1	SR-FE-3PW-MSK-1883	FIXED MASK 3 ASSY, XFP, CELL 17	Welded Aluminum-6061
22	1	SR-FE-3PW-7660	DRIFT PIPE, CANTED LONG STRAIGHT ASSY	
21	1	SR-FE-3PW-7610	DRIFT PIPE ASSY	
20	1	SR-FE-3PW-7602	DRIFT PIPE, WELDMENT	
19	1	SR-FE-3PW-7600	DRIFT PIPE ASSY	
18	1	SR-FE-3PW-7031	TABLE ASSY, DIAGNOSTIC CROSS	
17	1	SR-FE-3PW-7030	TABLE ASSY, SAFETY SHUTTER	
16	1	SR-FE-3PW-7015	TABLE ASSY, FM4, SHADOW SHIELD	
15	1	SR-FE-3PW-7013	TABLE ASSY, FM5, LCO2, PHOTON SHUTTER	
14	1	SR-FE-3PW-7004	TABLE ASSY, FM2, LCO1, Be WINDOW	
13	1	SR-FE-3PW-4651	DRIFT PIPE, WELDMENT	
12	16	PI-SCR-0110	STUD, 5/16" - 24 X 2.00 LG, ST ST, SILVER PL	SST, SILVER PL
11	32	PI-SCR-0011	SCREW, 12 PT FLANGE STL (IFI 115 - 5/16 - 24 - 1.50)	SST, SILVER PL
10	1	PI-FLG-0083	FLANGE, ZERO LENGTH REDUCER 8" TO 6"	Stainless Steel, Austenitic
9	16	PI-CLMP-0056	Stainless Steel Worm-Drive hose clamp 4-1/8 to 7" clamp diameter range	STAINLESS STEEL TYPE 316L
8	1	PD-XFP-PFM-1000	MIRROR ASSY, XFP PFM	
7	58	IFI 115 - 5/16 - 24 - 2 1/4	Flange 12-Point Screw	SST, SILVER PL
6	12	ASME B18.21.1 - 1/2	Regular Helical Spring Lock Washers(Inch Series)	Steel, Zinc Plated
5	54	ANSI B18.22.1 - 5/16 - narrow - Type B	Plain Washer (Inch)Type A and B	SST
4	32	ANSI B18.22.1 - 5/16 - narrow - Type A	Plain Washer (Inch)Type A and B	SST
3	12	ANSI B18.22.1 - 1/2 - narrow - Type B	Plain Washer (Inch)Type A and B	Steel, Zinc Plated
2	54	ANSI B18.2.2 - 5/16 - 24	Hex Nuts (Inch Series) Hex Nut	SST
1	12	ANSI B18.2.1 - 1/2-13 UNC - 2	Hex Cap Screw	Steel, Zinc Plated

PARTS LIST

17-BM BEAMLINE

UNLESS OTHERWISE SPECIFIED
ALL DIMENSIONS ARE IN INCHES
DIMENSIONS IN BRACKETS [xx.xx] (WHERE PRESENT) ARE MILLIMETERS AND ARE FOR REFERENCE ONLY
INTERPRET DRAWING AS PER ASME Y14.5-1994 OR Y32.3-1975

DIMENSIONAL TOLERANCES: X. ± 0.060, .X ± 0.030, .XX ± 0.015, .XXX ± 0.005
ANGULAR TOLERANCE: ± .5°
FINISH: 125
BREAK EDGES & SHARP CORNERS 0.005 MIN. TO 0.030 MAX

BROOKHAVEN NATIONAL LABORATORY
BROOKHAVEN NATIONAL LABORATORY
BROOKHAVEN SCIENCE ASSOCIATES
UPTON, NEW YORK 11973
Exploring Life's Mysteries, Protecting its Future
NSLS II NATIONAL SYNCHROTRON LIGHT SOURCE II

DRAWN BY	J TUOZZOLO	1/23/2015
CHECKED BY	CA/CS	2/2016
VACUUM APPROVAL	C HETZEL	2/2016
ENGINEER APPROVAL	F DEPAOLA	2/2016
SUPERVISOR APPROVAL	S SHARMA	2/2016
ESH&H APPROVAL	A ACKERMAN	2/2016
QA APPROVAL	J HAWKES	2/2016

STORAGE RING
FRONT END, 3PW, CELL 17-BM
LAYOUT, XFP BEAMLINE

SHEET SIZE: E
DRAWING/PART NUMBER: SR-FE-3PW-7000
REVISION: A

NEXT ASSY: FINAL
PROJECT: NSLS-II
THIRD ANGLE PROJECTION
SCALE: SEE DWG VIEW
WBS# 7.01.05.02
ESH&Q RISK LEVEL A-1
SHEET 1 OF 4

C:\Mech-Engl\TS\SR\FE\3PW\SR-FE-3PW-7000.dwx

RELEASED + EFFECTIVE

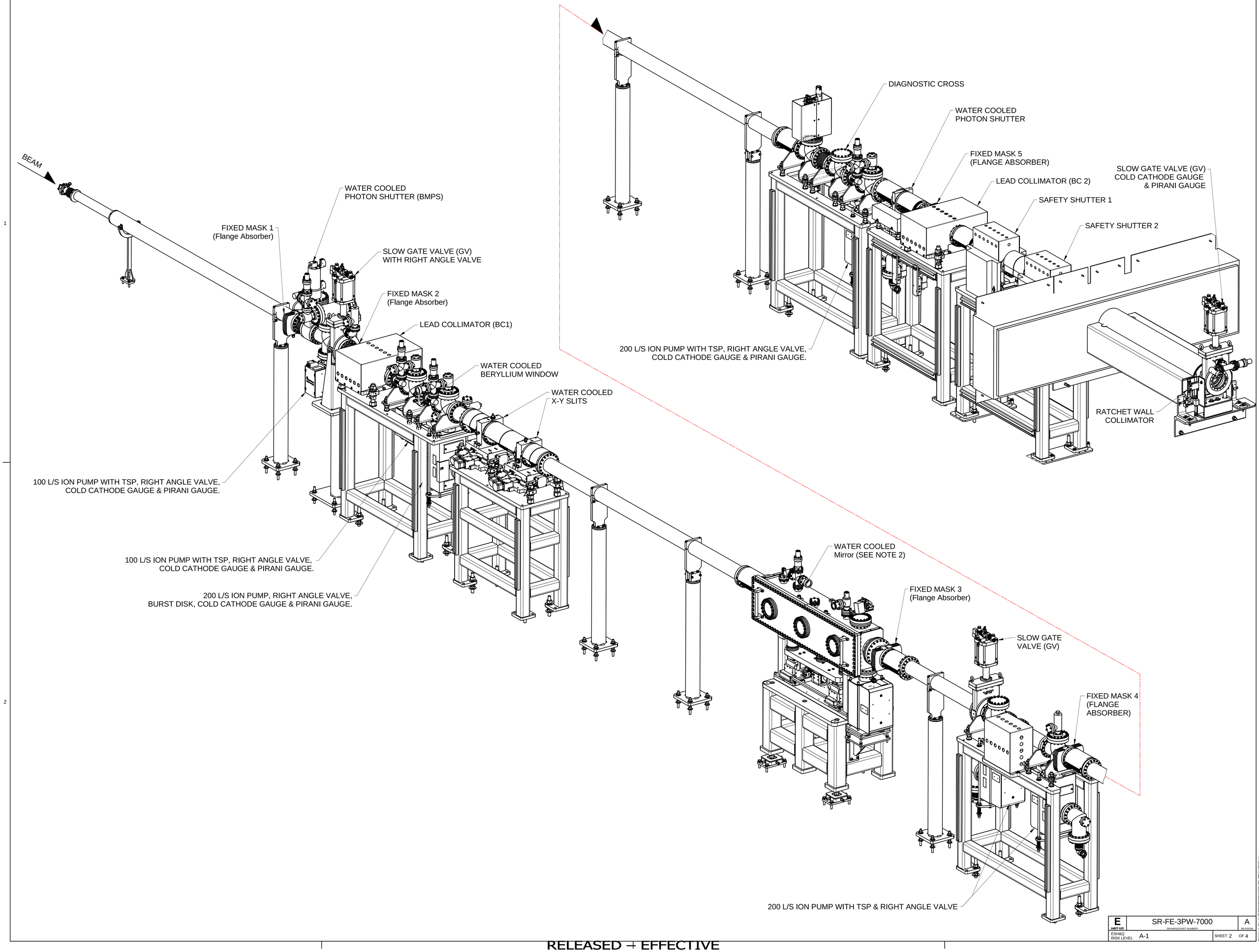

E	SR-FE-3PW-7000	A
SHEET SIZE	DRAWING/PART NUMBER	REVISION
ESH&Q RISK LEVEL A-1	SHEET 2 OF 4	

C:\Mech-Eng\LT\SR\FE\3PW\SR-FE-3PW-7000.idw

RELEASED – EFFECTIVE

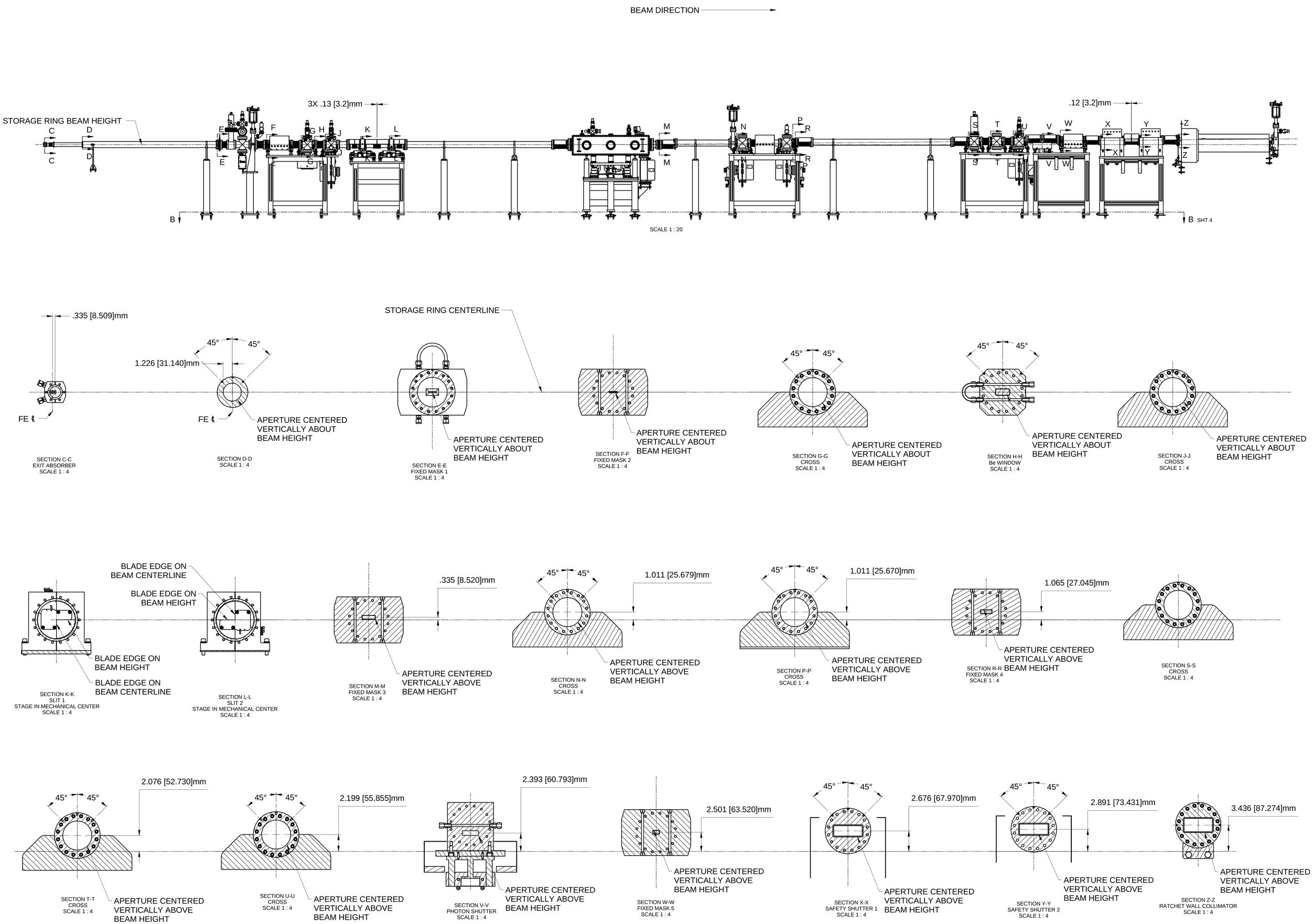

E SHEET SIZE	SR-FE-3PW-7000 DRAWING/PART NUMBER	A REVISION
ESH&Q RISK LEVEL A-1	SHEET 3 OF 4	

C:\Mech Eng\LTD\SR\FE\3PW\SR-FE-3PW-7000.dwg

RELEASED + EFFECTIVE

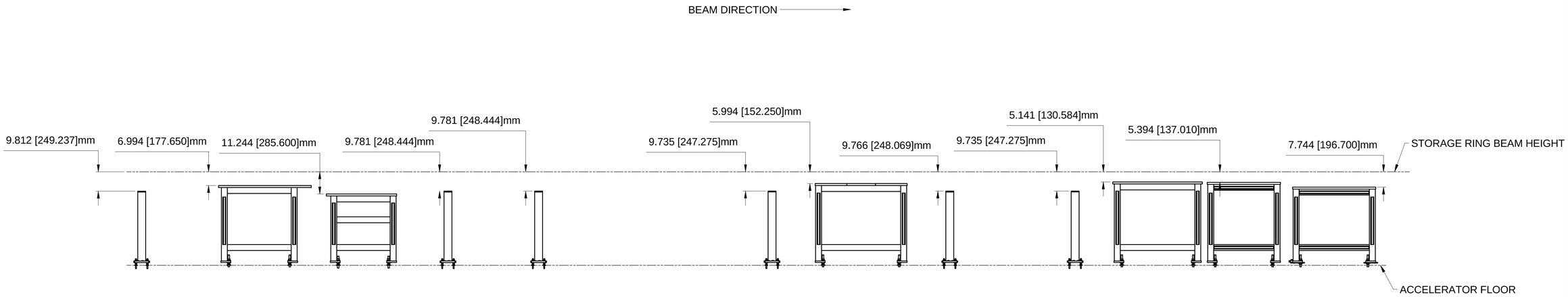

PEDESTAL AND TABLE HEIGHT
SCALE 1 : 20

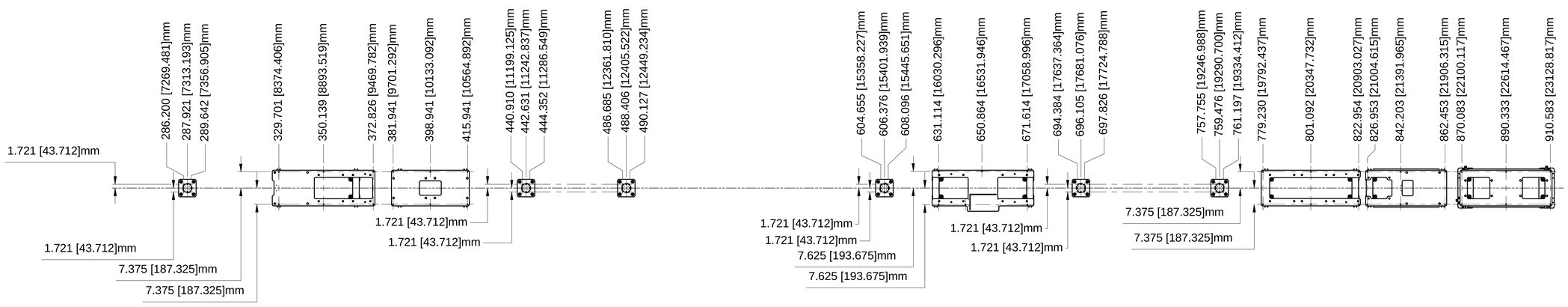

PEDESTAL AND TABLE FIDUCAIL LOCATIONS
SCALE 1 : 20

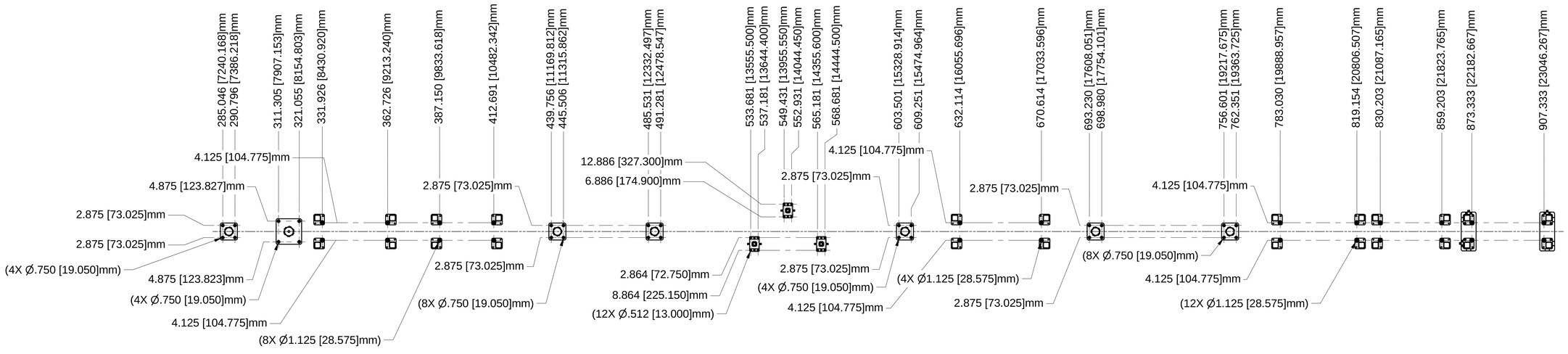

SECTION B-B
PEDESTAL AND TABLE FLOOR MOUNTING LOCATIONS
SCALE 1 : 20

NOTES:
1. FOR Ø1.125 [28.575mm] HOLES USE "3/4" P/N PI-HDW-0021 ANCHORS.

2. FOR Ø.750 [19.050mm] HOLES USE "1/2" P/N PI-HDW-0040 ANCHORS.

E	SR-FE-3PW-7000	A
SHEET SIZE	DRAWING/PART NUMBER	REVISION
ESH&Q RISK LEVEL A-1	SHEET 4 OF 4	

C:\Mech-Eng\LT\SR\FE\3PW\SR-FE-3PW-7000.idw

RELEASED + EFFECTIVE