REVISION HISTORY					
REV	DESCRIPTION	DATE	DESIGNER	CHECKED BY	ENGINEER
A	RELEASE PER ECO-003407	7/2016	M. JOHANSON	L. LIENHARD	L. LIENHARD

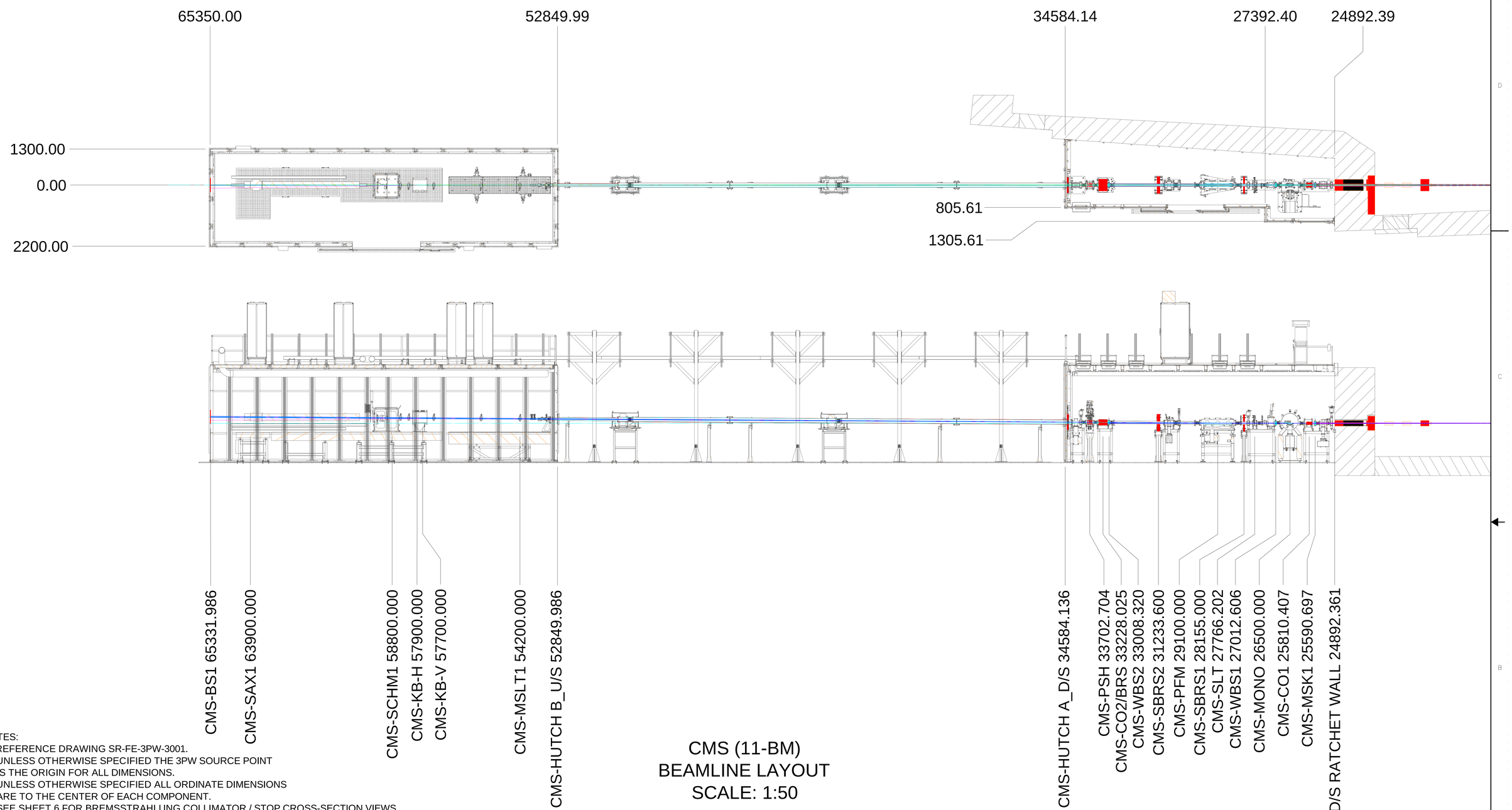

CMS (11-BM)
BEAMLINE LAYOUT
SCALE: 1:50

NOTES:
1. REFERENCE DRAWING SR-FE-3PW-3001.
2. UNLESS OTHERWISE SPECIFIED THE 3PW SOURCE POINT IS THE ORIGIN FOR ALL DIMENSIONS.
3. UNLESS OTHERWISE SPECIFIED ALL ORDINATE DIMENSIONS ARE TO THE CENTER OF EACH COMPONENT.
4. SEE SHEET 6 FOR BREMSSTRAHLUNG COLLIMATOR / STOP CROSS-SECTION VIEWS AT U/S FACE OF LEAD / TUNGSTEN.
5. WHITE BEAM STOP 2 (WBS2) IS DESIGNED TO STOP POSSIBLE WHITE BEAM LEAKAGE THRU WHITE BEAM STOP 1 (WBS1) DUE TO MINIMUM EDGE DISTANCE.
6. SEE SHEET 7 FOR VERTICAL SYNCHROTRON MISSTEER RAYTRACING. THIS TRACE SHOWS THE MAX BEAM SPREAD ON THE BEAM STOP BY TRACING THE MAX MONO FAN REFLECTED THRU THE MAX APERTURE AT WBS2 AND TRIMMED AT THE SHIELDED BEAM PIPE.

* THIS SHEET IS FOR REFERENCE ONLY*

SPECIFICATIONS		REFERENCE
Project	BDN PROJECT	LT-EDP-015-041
Source	Three Pole Wiggler (3PW)	LT-C-SPC-SR-ID-BL-3PW-001 VERSION 1
Beam Line Name	Complex Materials Scattering	LT-EDP-015-041
Abbreviation	CMS	LT-EDP-015-041
Period of insertion device	N/A	LT-EDP-015-041
Cell	11BM	LT-EDP-015-041
Length of Source	250 mm	LT-C-ASD-RSI-002
Location of Source (from Start of Bending Magnet)	366 mm	LT-EDP-015-041
Ray Tracing Procedure		PS-C-XFD-PRC-008 VERSION 2
Front End Ray Tracing Drawing		SR-FE-3PW-3001 REV C

ABBREVIATIONS:
BRS - BREMSSTRAHLUNG STOP
BS - BEAM STOP
CO - BREMSSTRAHLUNG COLLIMATOR
D/S - DOWNSTREAM
MONO - MONOCHROMATER
MSK - FIXED MASK
MSLT - MONOCHROMATIC SLIT
PFM - PHOTON FOCUSING MIRROR
PSH - PHOTON SHUTTER
SAX - SAXS DETECTOR
SBRS - SECONDARY BREMSSTRAHLUNG SHIELD
SCHM - SAMPLE CHAMBER
SLT - SLIT
SSA - SECONDARY SOURCE APERTURE
U/S - UPSTREAM
WBS - WHITE BEAM STOP

UNLESS OTHERWISE SPECIFIED
ALL DIMENSIONS ARE IN MILLIMETERS
DIMENSIONS IN BRACKETS [xx.xx] (WHERE PRESENT) ARE INCHES AND ARE FOR REFERENCE ONLY
INTERPRET DRAWING AS PER ANSI Y14.5-1994 OR Y32.2-1975

DIMENSIONAL TOLERANCES: X.± 1.500, .X ± 0.750, .XX ± 0.400, .XXX ± 0.120
ANGULAR TOLERANCE: ± .5
FINISH: 3.2
BREAK EDGES & SHARP CORNERS 0.120 MIN. TO 0.750 MAX.

BROOKHAVEN NATIONAL LABORATORY
BROOKHAVEN NATIONAL LABORATORY
BROOKHAVEN SCIENCE ASSOCIATES
UPTON, NEW YORK 11973
Exploring Life's Mysteries, Protecting its Future

NSLS II NATIONAL SYNCHROTRON LIGHT SOURCE II

DRAWN BY	M. JOHANSON	7/11/2016
CHECKED BY	L. LIENHARD	7/2016
VACUUM APPROVAL	-	-
ESH&Q APPROVAL	L. LIENHARD	7/2016
SUPERVISOR APPROVAL	M. FUKUTO	7/2016
ESH APPROVAL	L. STIEGLER	7/2016
QA APPROVAL	J. ZIPPER	7/2016

PHOTON DIVISION
CMS BEAMLINE
CMS BEAMLINE RAYTRACE

NEXT ASSY: N/A
PROJECT: BDN
THIRD ANGLE PROJECTION
SCALE: SEE VIEW
WBS# 6.05.02
SIZE: E
DRAWING/PART NUMBER: PD-CMS-RAYT-0001
REVISION: A
ESH&Q RISK LEVEL: A-1
SHEET 1 OF 7

C:\Macro\Engd\TIFF\CMS\RAYT\PD-CMS-RAYT-0001.dwg

RELEASED – EFFECTIVE

TABLE OF TOLERANCED DIMENSIONS (mm)

LINE	DESCRIPTION	NOMINAL	±	FABRICATION	±	POSITION	=	TOTAL
1	TUNGSTEN COLLIMATOR (CO1)	45.09	+	2X 0.18	+	2X 0.22	=	45.89 MAX
2	BREMSSTRAHLUNG STOP LEAD APERTURE (CO2/BRS)	55.10	+	2X 0.18	+	2X 1.5	=	58.46 MAX

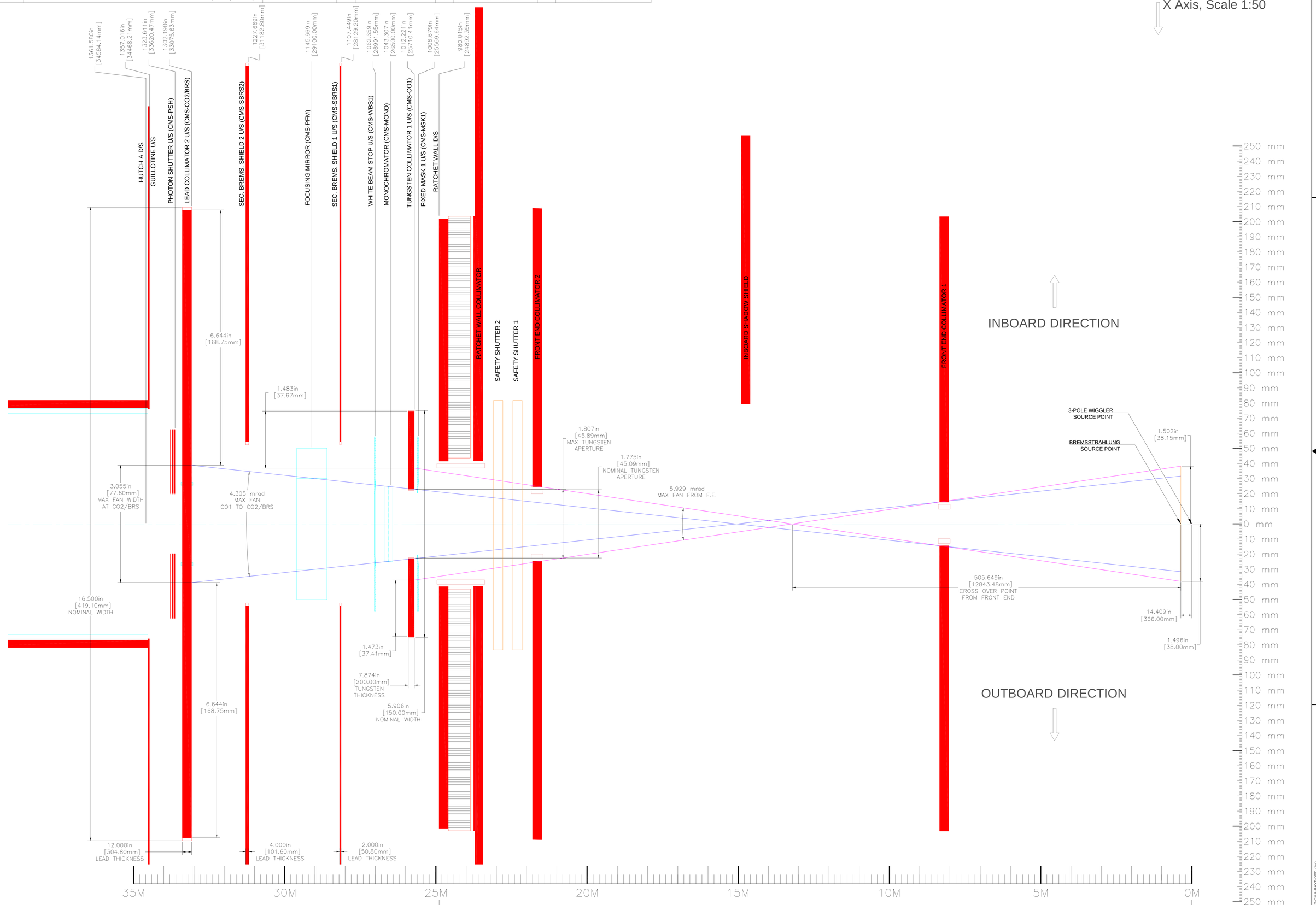

Bremsstrahlung Ray Tracing - Horizontal

Scale 1:40

SEE FRONT END RAY TRACING
SR-FE-3PW-3001

SHEET SIZE	DRAWING/PART NUMBER	REVISION
E	PD-CMS-RAYT-0001	A

ESH&Q RISK LEVEL A-1 SHEET 4 OF 7

RELEASED – EFFECTIVE

TABLE OF TOLERANCED DIMENSIONS (mm)

LINE	DESCRIPTION	NOMINAL	±	FABRICATION	±	POSITION	=	TOTAL
1	TUNGSTEN COLLIMATOR (CO1)	7.19	+	2X 0.18	+	2X 0.22	=	7.99 MAX
2	BREMSSTRAHLUNG STOP LEAD APERTURE (CO2/BRS)	16.50	+	2X 0.18	+	2X 1.5	=	19.86 MAX

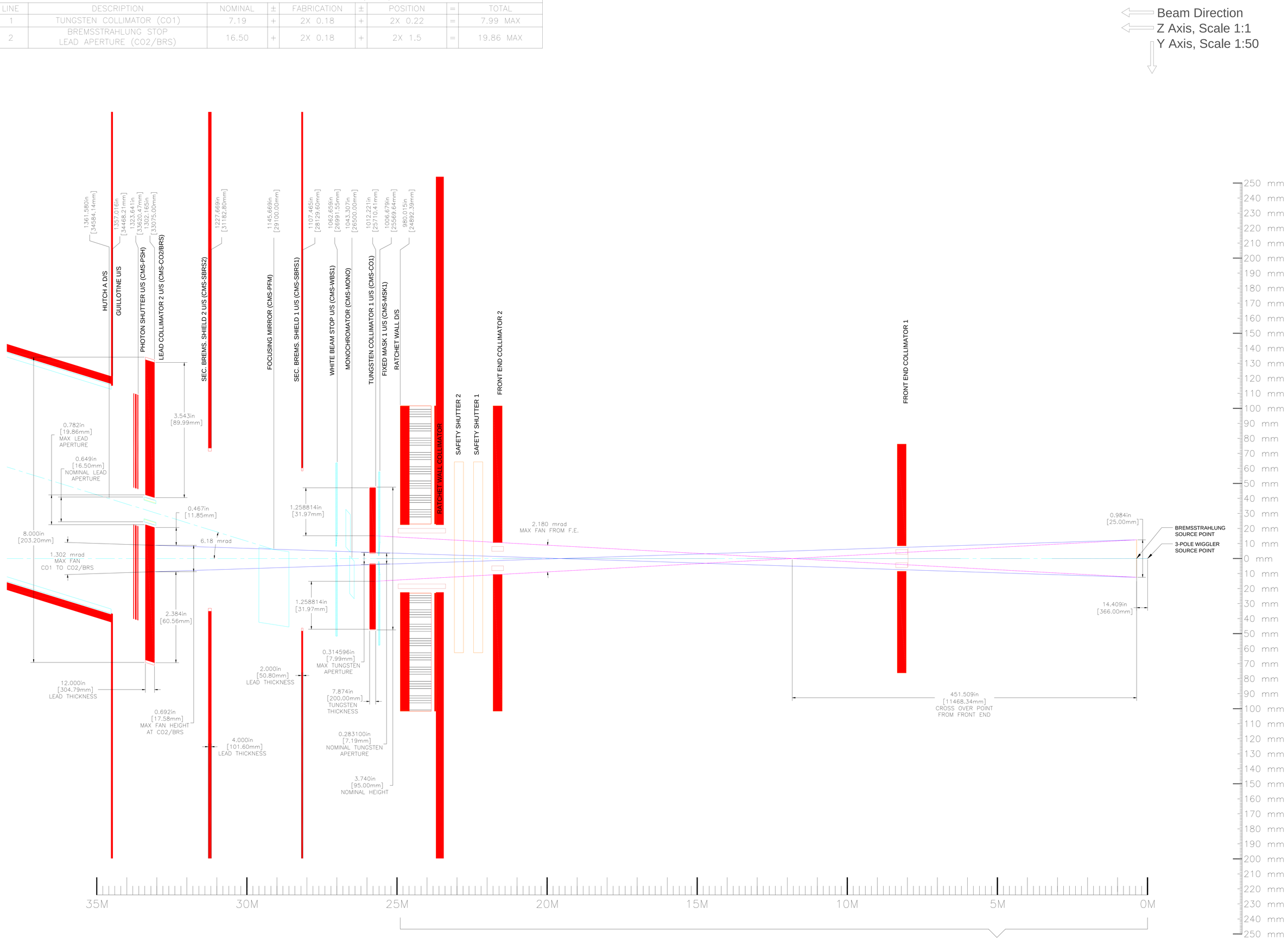

SEE FRONT END RAY TRACING
SR-FE-3PW-3001

Bremsstrahlung Ray Tracing - Vertical

Scale 1:40

E	PD-CMS-RAYT-0001	A
SHEET SIZE	DRAWING/PART NUMBER	REVISION
ESH&Q RISK LEVEL	A-1	SHEET 5 OF 7

RELEASED – EFFECTIVE

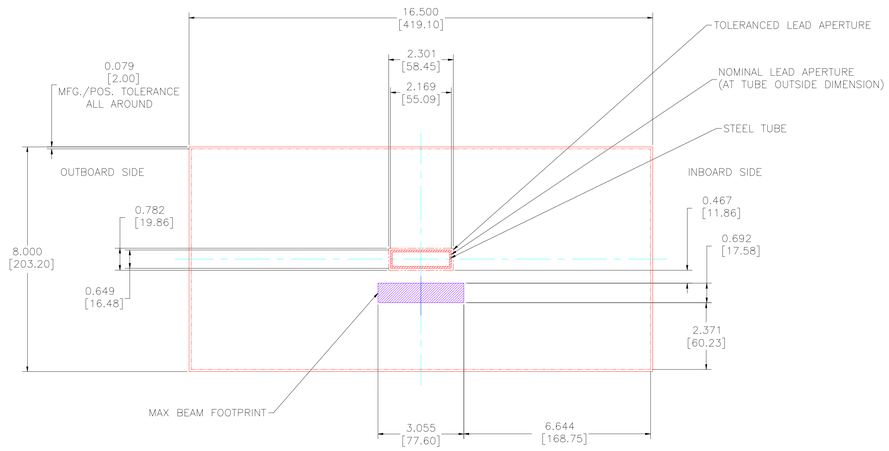

LEAD BREMSSTRAHLUNG STOP (CMS-C02/BRS)

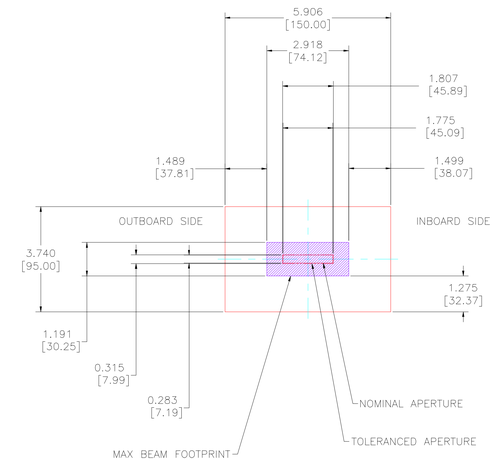

TUNGSTEN COLLIMATOR (CMS-C01)

BREMSSTRAHLUNG COLLIMATOR & STOP DETAILS

Scale 1:2

E	PD-CMS-RAYT-0001	A
SHEET SIZE	DRAWING/PART NUMBER	REVISION
ESH&Q RISK LEVEL A-1	SHEET 6 OF 7	

C:\MechEng\PD\CMS\RAYT\PD-CMS-RAYT-0001.dwg

RELEASED – EFFECTIVE