REVISION HISTORY					
REV	DESCRIPTION	DATE	DESIGNER	CHECKED BY	ENGINEER
A	RELEASE PER ECO 003331	2/2016	J TUOZZOLO	CA/CS	F DEPAOLA
B	REVISE PER ECO-004375	7/2016	R GAMBELLA	CA/CS	G DACOS

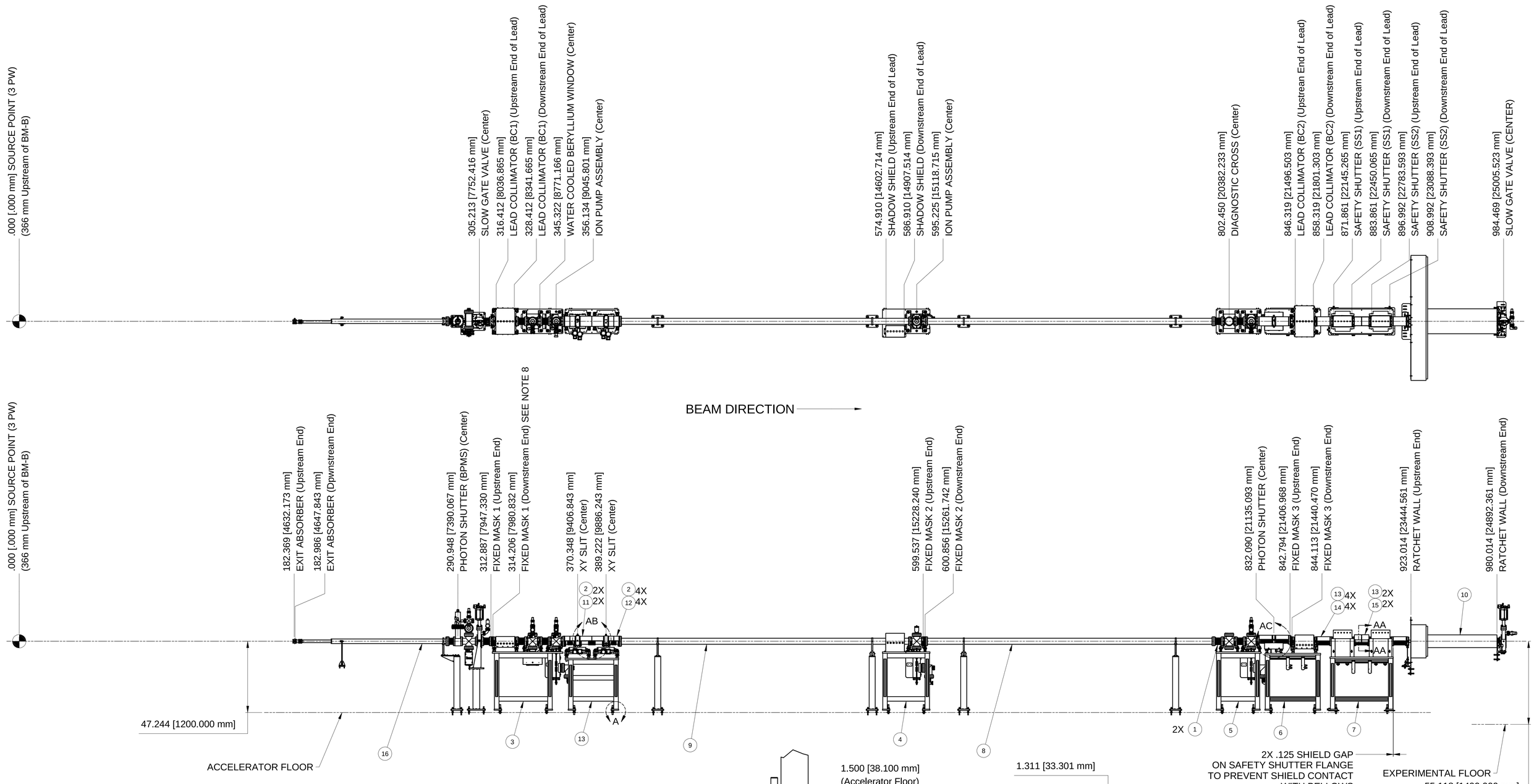

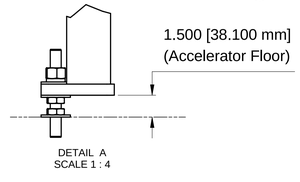

DETAIL A
SCALE 1 : 4

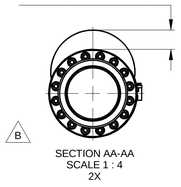

B

SECTION AA-AA
SCALE 1 : 4
2X

CLAMPS MUST BE ADJACENT TO PHOTON SHUTTER TO PREVENT SHIELDS FROM CONTACTING BELLOWS.

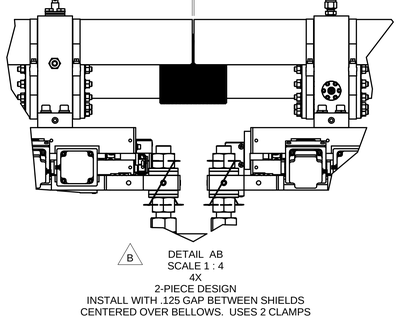

B

DETAIL AB
SCALE 1 : 4
4X
2-PIECE DESIGN
INSTALL WITH .125 GAP BETWEEN SHIELDS
CENTERED OVER BELLOWS. USES 2 CLAMPS

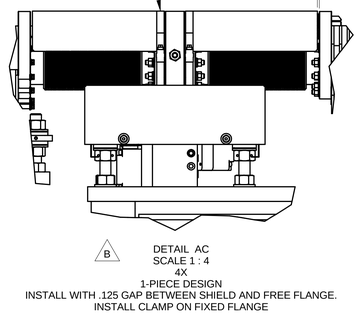

B

DETAIL AC
SCALE 1 : 4
4X
1-PIECE DESIGN
INSTALL WITH .125 GAP BETWEEN SHIELD AND FREE FLANGE.
INSTALL CLAMP ON FIXED FLANGE

NOTES:

1. COMPONENTS LAYOUT AS PER RSI (LT-C-ASD-RSI-002 VERSION 3).
2. ALL ORDINATE DIMENSIONS ARE FROM SOURCE-POINT (3PW).
3. SEE SHEET 3 FOR SURVEY AND ALIGNMENT DIMENSIONS.
4. SEE SHEET 4 FOR COMPONENT HEIGHTS AND ALIGNMENT DIMENSIONS.
5. COMPONENT POSITION TOLERANCE OF ± .008 [.200] IN X AND Y DIRECTION AND ± .020 [.500] IN Z DIRECTION (BEAM DIRECTION).
6. REFERENCE WATER FLOW DIAGRAM SR-FE-3PW-UT-3000.
7. REFERENCE AIR SCHEMATIC SR-FE-UT-0001.
8. FOR SURVEY PURPOSES, USE FIXED MASK 1 TO ESTABLISH PRACTICAL FRAME.
9. REFERENCE RAY TRACE DWG SR-FE-3PW-3001.
10. BAKE OUT IAW NSLS-II VACUUM SYSTEMS BAKE OUT PROCEDURE PS-C-ASD-PRC-105.
11. INSTALL ALL SAFETY WIRE AFTER FINAL ALIGNMENT.
12. AFTER BAKE OUT AND BEFORE FINAL SURVEY, GROUT TABLE SUPPORTS FOR ITEMS 3, 13, 4, 5, 6 AND 7.

B

TOP OFF SAFETY CREDITED COMPONENT OR ASSEMBLY. ANY CHANGES TO THIS DRAWING REQUIRES APPROVAL OF THE TECHNICAL AUTHORITY FOR TOP OFF SAFETY.

COMPONENT	RADIATION SAFETY COMPONENT CHECKLIST	TOP OFF SAFETY SYSTEM
FIXED MASK 1	X	X
LEAD COLLIMATOR 1	X	
SHADOW SHIELD	X	
FIXED MASK 2	X	
FIXED MASK 3	X	
LEAD COLLIMATOR 2	X	X
SAFETY SHUTTER 1	X	
SAFETY SHUTTER 2	X	
RATCHET WALL COLLIMATOR	X	

B

11-BM BEAMLINE

B

ITEM	QTY	PART NUMBER	DESCRIPTION	MATERIAL
16	1	SR-VA-CHM-6350	EXIT CHM SUBASSY, S6, CELL 11-BM	
15	2	SR-FE-SHLD-0002-02	BELLOWS SHIELD, 4.75" LONG	Aluminum, Corrugated
14	4	SR-FE-SHLD-0001-11	BELLOWS SHIELD, 9.00 lg.	Aluminum, Corrugated
13	1	SR-FE-3PW-SLT-2000	TABLE ASSEMBLY, SLIT-STAGE	
12	4	SR-FE-3PW-SHLD-0001-02	BELLOWS SHIELD, 3.86 lg.	Aluminum, Corrugated
11	2	SR-FE-3PW-SHLD-0001-01	BELLOWS SHIELD, 8.17 lg.	Aluminum, Corrugated
10	1	SR-FE-3PW-RCO-3000	RATCHET WALL COLLIMATOR, CMS	
9	1	SR-FE-3PW-3610	DRIFT PIPE ASSY	
8	1	SR-FE-3PW-3600	DRIFT PIPE, ASSY	
7	1	SR-FE-3PW-3030	TABLE ASSY, SAFETY SHUTTER	
6	1	SR-FE-3PW-3013	TABLE ASSY, FM3, LC02, PHOTON SHUTTER	
5	1	SR-FE-3PW-1031	TABLE ASSY, DIAGNOSTIC CROSS	
4	1	SR-FE-3PW-1014	TABLE ASSY, FM2, SHADOW SHIELD	
3	1	SR-FE-3PW-1004	TABLE ASSY, FM1, LCO1, Be WINDOW	
2	15	PI-CLMP-0056	Stainless Steel Worm-Drive hose clamp 4-1/8 to 7" clamp diameter range	STAINLESS STEEL TYPE 316L
1	1	PI-BLW-0021	BELLOWS, FORMED, 4" ID 6" CF FLANGE	

PARTS LIST

UNLESS OTHERWISE SPECIFIED
ALL DIMENSIONS ARE IN INCHES
DIMENSIONS IN BRACKETS [xx.xx] (WHERE PRESENT) ARE MILLIMETERS AND ARE FOR REFERENCE ONLY
INTERPRET DRAWING AS PER ASME Y14.5-1994 OR Y32.2-1975

DIMENSIONAL TOLERANCES: X. ± 0.060, .X ± 0.030, .XX ± 0.015, .XXX ± 0.005
ANGULAR TOLERANCE: ± .5°
FINISH: 125
BREAK EDGES & SHARP CORNERS 0.005 MIN. TO 0.030 MAX

BROOKHAVEN NATIONAL LABORATORY
BROOKHAVEN NATIONAL LABORATORY
BROOKHAVEN SCIENCE ASSOCIATES
UPTON, NEW YORK 11973
Exploring Life's Mysteries, Protecting its Future

NSLS II
NATIONAL SYNCHROTRON LIGHT SOURCE II

DRAWN BY	J TUOZZOLO	9/12/2014
CHECKED BY	CA/CS	3/2016
VACUUM ENGINEER APPROVAL	C HETZEL	3/2016
ENGINEER APPROVAL	F DEPAOLA	3/2016
SUPERVISOR APPROVAL	S SHARMA	3/2016
ESH&Q APPROVAL	A ACKERMAN	3/2016
QA APPROVAL	J HAWKES	3/2016

STORAGE RING
FRONT END, 3PW, CELL 11-BM
LAYOUT, CMS BEAMLINE

E — SHEET SIZE
SR-FE-3PW-3000 — DRAWING/PART NUMBER
B — REVISION

THIRD ANGLE PROJECTION
SCALE: SEE DWG VIEW
WBS# 6.05.05.01
ESH&Q RISK LEVEL A-1
SHEET 1 OF 4

NEXT ASSY: ----
PROJECT: NSLS-II

C:\Mech-Eng\LT\SR\FE\3PW\SR-FE-3PW-3000.dwg

RELEASED + EFFECTIVE

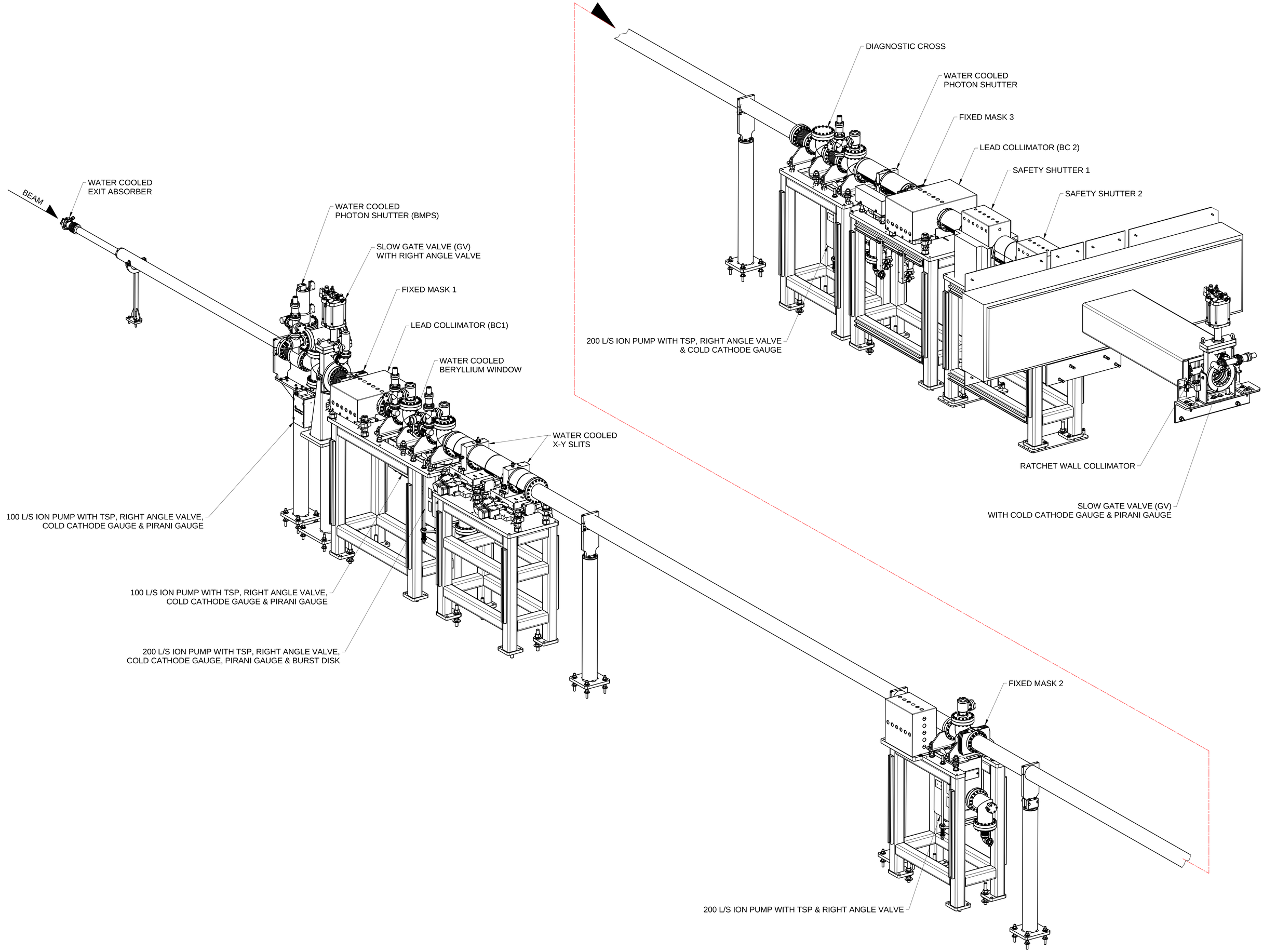

E	SR-FE-3PW-3000	B
SHEET SIZE	DRAWING/PART NUMBER	REVISION
ESH&Q RISK LEVEL A-1		SHEET 2 OF 4

C:\Mech-Eng\LTSR\FE\SR\FE-3PW-3000.dwg

RELEASED + EFFECTIVE

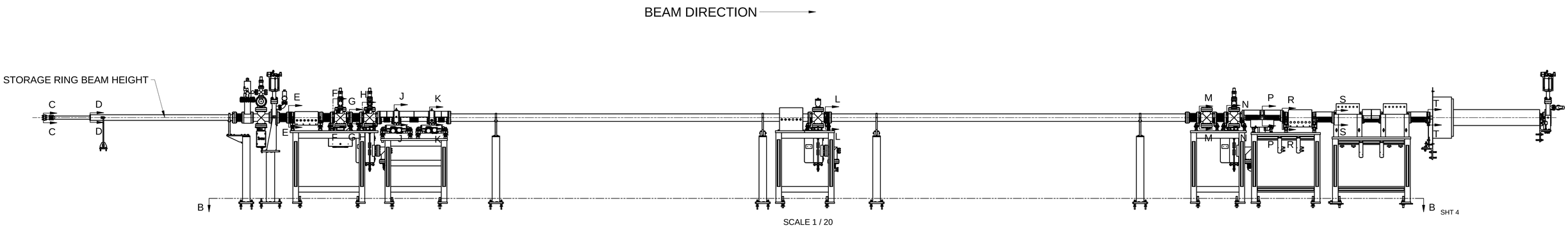

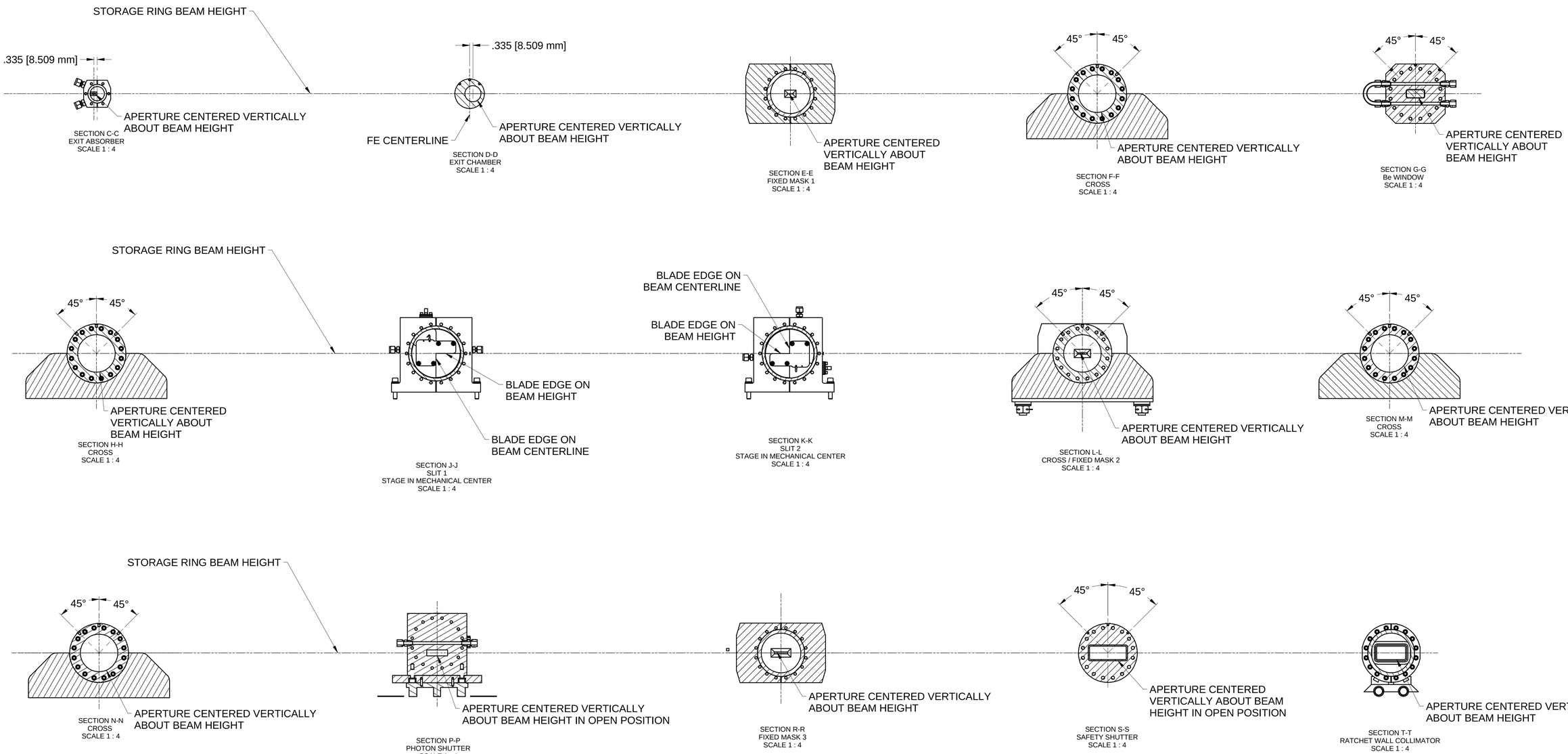

FOR SECTION B-B SEE SHEET 4 OF 4

E (SHEET SIZE)	SR-FE-3PW-3000 (DRAWING/PART NUMBER)	B (REVISION)
ESH&Q RISK LEVEL A-1	SHEET 3 OF 4	

C:\Mech-Eng\LT\SR\FE\3PW\SR-FE-3PW-3000.idw

RELEASED + EFFECTIVE

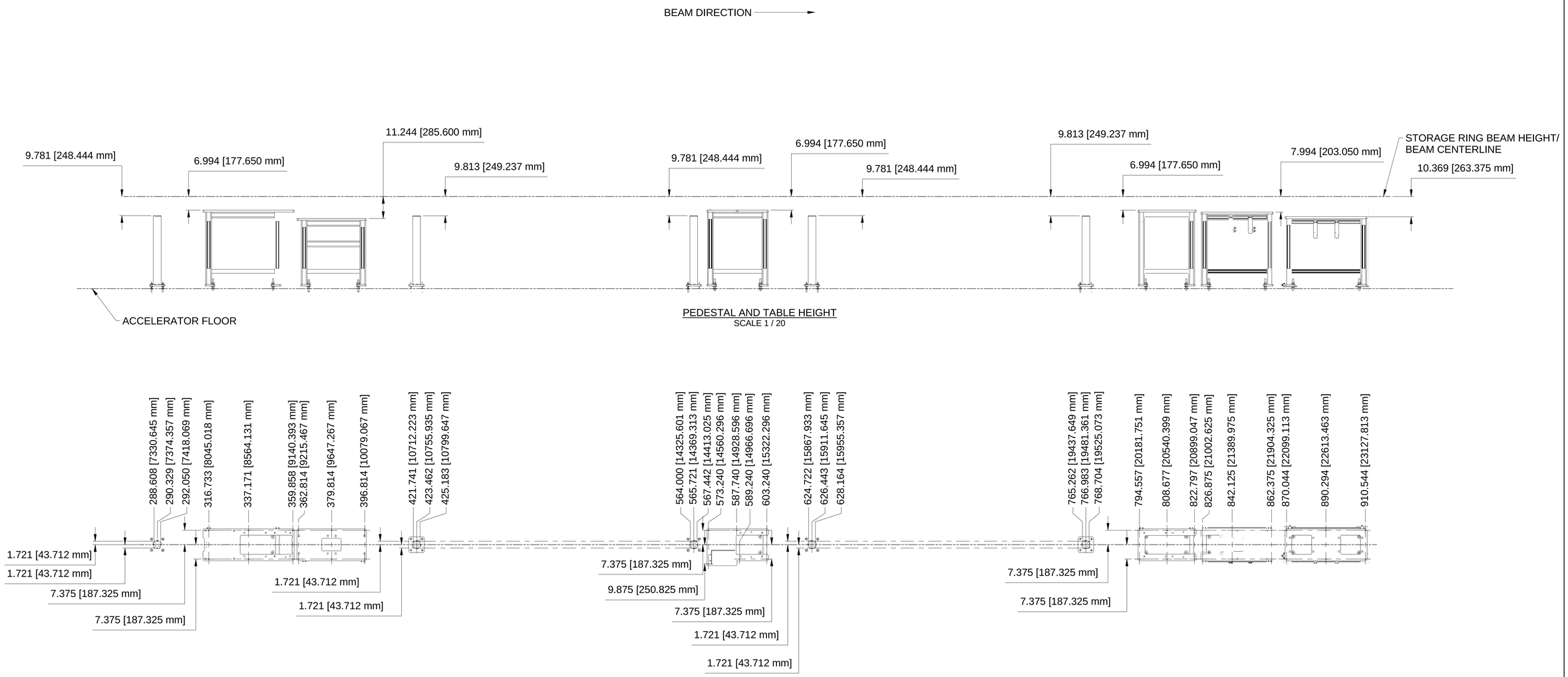

PEDESTAL AND TABLE HEIGHT
SCALE 1 / 20

PEDESTAL AND TABLE FIDUCIAL LOCATIONS
SCALE 1 / 20

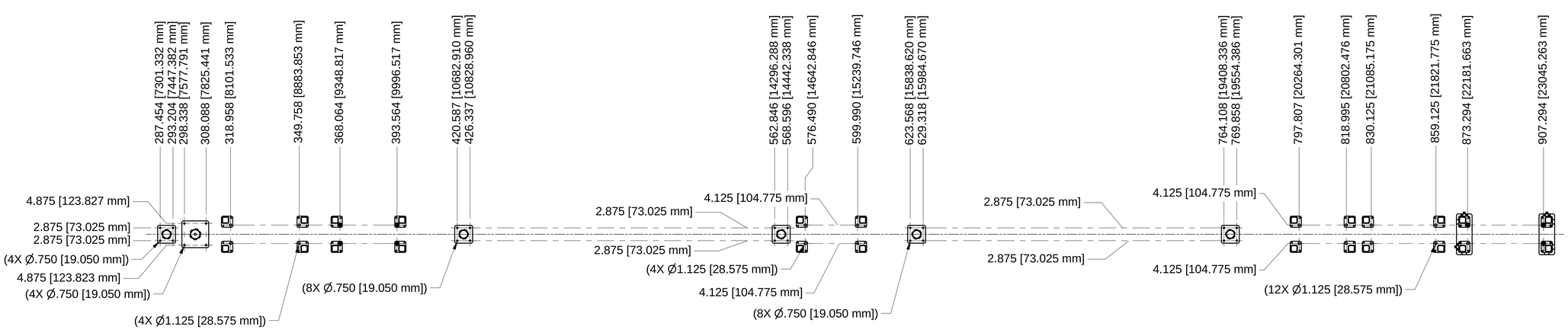

SECTION B-B
PEDESTAL AND TABLE FLOOR MOUNTING LOCATIONS
SCALE 1 / 20

NOTES:

1. FOR Ø1.125 [28.575mm] HOLES USE "3/4" DROP-IN ANCHORS P/N PI-HDW-0021.

2. FOR Ø.750 [19.050mm] HOLES USE "1/2" DROP-IN ANCHORS P/N PI-HDW-0040.

E (SHEET SIZE)	SR-FE-3PW-3000 (DRAWING/PART NUMBER)	B (REVISION)
ESH&Q RISK LEVEL A-1	SHEET 4 OF 4	

RELEASED + EFFECTIVE