REVISION HISTORY					
REV	DESCRIPTION	DATE	DESIGNER	CHECKED BY	ENGINEER
A	RELEASE PER ECO-003259	7/2016	M. JOHANSON	J. FABIJANIC	E. HAAS

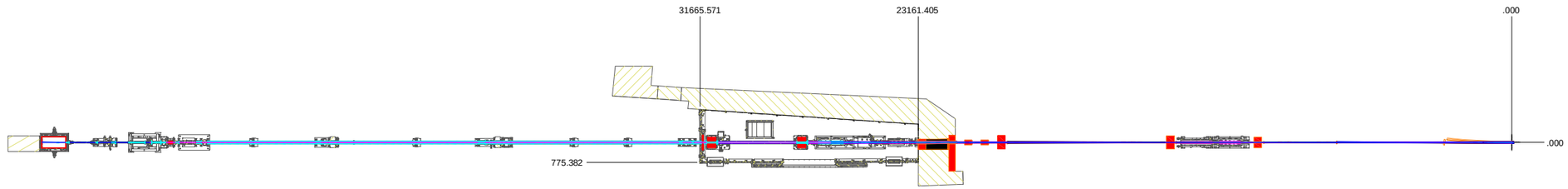

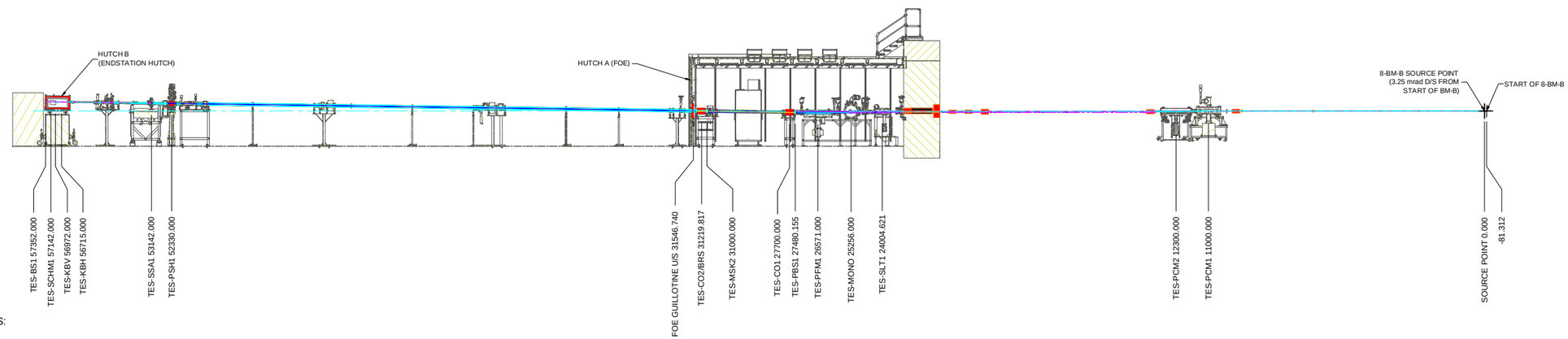

TES (8-BM)
BEAMLINE LAYOUT
SCALE: 1:60

NOTES:

1. REFERENCE FRONT END RAYTRACE DRAWING SR-FE-3PW-5001.

2. UNLESS OTHERWISE SPECIFIED THE BM-B SOURCE POINT IS THE ORIGIN FOR ALL ORDINATE DIMENSIONS.

3. UNLESS OTHERWISE SPECIFIED ALL ORDINATE DIMENSIONS ARE TO THE CENTER OF EACH COMPONENT.

4. HORIZONTAL AND VERTICAL MAX FANS ARE DEFINED AS FOLLOWS:
   a) BEAM REFLECTING OFF THE SAGITTALLY AND TANGENTIALLY CURVED SURFACE OF PFM AT 26.571M MUST TAPER HORIZONTALLY AND VERTICALLY TO A FOCUS OF LESS THAN 1 X 1 MM AT SSA1 (AT 53.142 M).
   b) HORIZONTAL EXTENT OF MIRROR SOURCE IS ASSUMED TO BE THE EXTENT OF THE MAX HORIZONTAL FAN FROM THE FRONT END RAYTRACE. THIS IS EFFECTIVELY REDUCED BY PBS1.
   c) THE MAXIMUM HORIZONTAL ENVELOPE OF BEAM CONNECTS THE WIDEST SOURCE POINT (PBS1) TO THE WIDEST POSSIBLE LOCATIONS OF BEAM AT THE FOCUS (SSA1). MAXIMUM DIVERGENCE FROM THE SSA1 TO THE BEAM STOP (BS1) IS DETERMINED BY THE CROSSING RAYS FROM THE INBOARD EXTREME OF SOURCE (PBS1) TO THE OUTBOARD EXTREME OF BEAM AT SSA (0.5MM FROM CENTER), AND VICE VERSA.
   d) THE MAXIMUM VERTICAL ENVELOPE OF BEAM CONNECTS THE WIDEST SOURCE POINT (FULL LENGTH OF MIRROR) TO THE WIDEST POSSIBLE LOCATIONS OF BEAM AT THE FOCUS (SSA1). MAXIMUM DIVERGENCE FROM THE SSA1 TO THE BEAM STOP (BS1) IS DETERMINED BY THE CROSSING RAYS FROM THE UPPER EXTREME OF SOURCE (U/S EDGE OF MIRROR) TO THE LOWER EXTREME OF BEAM AT SSA (0.5MM FROM CENTER), AND VICE VERSA.

5. SEE SHEET 6 FOR LEAD COLLIMATOR / STOP CROSS-SECTION VIEWS AT U/S FACE OF LEAD.

6. SEE SHEETS 7 & 8 FOR HORIZONTAL AND VERTICAL MAX SYNCHROTRON MISSTEER RAYTRACES.
   THESE SHEETS ARE FOR REFERENCE ONLY

7. CO1 & CO2 ARE REQUIRED FOR SECONDARY BREMSSTRAHLUNG AND TOP-OFF RADIATION PROTECTION.

SPECIFICATIONS		REFERENCE
Project	BDN PROJECT	LT-EDP-015-041
Source	BENDING MAGNET (BM)	LT-C-ASD-RSI-003
Beam Line Name	TENDER X-RAY ABSORPTION SPECTROSCOPY BEAMLINE	LT-EDP-015-041
Abbreviation	TES	LT-EDP-015-041
Period of insertion device	N/A	N/A
Cell	8-BM	LT-EDP-015-041
Length of Source	N/A	N/A
Location of Source (from Start of Bending Magnet)	81.31 mm	LT-EDP-015-041
Ray Tracing Procedure		PS-C-XFD-PRC-008 VERSION 2
Front End Ray Tracing Drawing		SR-FE-3PW-5001 REV C

ABBREVIATIONS:
CO - BREMSSTRAHLUNG COLLIMATOR
BRS - BREMSSTRAHLUNG STOP
BS - BEAM STOP
D/S - DOWNSTREAM
MONO - MONOCHROMATER
MSK - FIXED MASK
PBS - PINK BEAM STOP (FIXED MASK)
PCM - PHOTON COLLIMATING MIRROR
PFM - PHOTON FOCUSING MIRROR
PSH - PHOTON SHUTTER
SCHM - SAMPLE CHAMBER
SLT - SLIT
SSA - SECONDARY SOURCE APERTURE
U/S - UPSTREAM
WIN - WINDOW

UNLESS OTHERWISE SPECIFIED ALL DIMENSIONS ARE IN MILLIMETRE
DIMENSIONS IN BRACKETS [ ] ARE FOR REFERENCE PURPOSES AND SHOULD ONLY BE REFERRED ONLY
BROOKHAVEN NATIONAL LABORATORY

DRAWN BY	M. JOHANSON	6/22/2016
CHECKED BY	J. FABIJANIC	7/2016
ENGINEER APPROVAL	E. HAAS	7/2016
PROGRAM APPROVAL	P. NORTHRUP	7/2016
ESH&Q APPROVAL	L. STEIGLER	7/2016
QA APPROVAL	J. ZIPPER	7/2016

DIMENSIONAL TOLERANCES: X ± 1.500, X ± 0.750, XX ± 0.400, XXX ± 0.120; ANGLE ± 5°; SURFACE 3.2
THIRD ANGLE PROJECTION
SCALE: SEE VIEW
WBS# 6.09.02
NEXT ASSY: N/A
PROJECT: BDN

PROGRAM DEVELOPMENT & MANAGEMENT DIVISION
NATIONAL SYNCHROTRON LIGHT SOURCE II
PHOTON DIVISION
TES BEAMLINE
TES BEAMLINE RAYTRACE
SIZE: E
DRAWING NUMBER: PD-TES-RAYT-0001
REVISION: A
ESH&Q RISK LEVEL: A-1
SHEET 1 OF 8

C:\Users\mjohanson\Desktop\TES-RAYT-0001.dwg

TABLE OF TOLERANCED DIMENSIONS (mm)								
LINE	DESCRIPTION	NOMINAL	±	FABRICATION	±	POSITION	=	TOTAL
1	PINK BEAM STOP 1 U/S APERTURE	77.38	+	2 x 0.19	+	2 x 0.22	=	78.21 MAX
2	PINK BEAM STOP 1 BEAM DEFINING APERTURE	60.06	+	2 x 0.18	+	2 x 0.22	=	60.86 MAX
3	FIXED MASK 2 U/S APERTURE	70.19	+	2 x 0.19	+	2 x 0.22	=	71.01 MAX
4	FIXED MASK 2 BEAM DEFINING APERTURE	52.86	+	2 x 0.18	+	2 x 0.22	=	53.66 MAX

TABLE OF TOLERANCED DIMENSIONS (mm), con't								
LINE	DESCRIPTION	NOMINAL	±	FABRICATION	±	POSITION	=	TOTAL
5	BREMSSTRAHLUNG COLLIMATOR (CO1)	65.47	–	2 x 0.18	–	2 x 0.22	=	64.67 MIN
6	BREMSSTRAHLUNG COLLIMATOR (CO2)	56.44	–	2 x 0.18	–	2 x 0.22	=	55.64 MIN
7	PHOTON SHUTTER APERTURE	40.00	–	2 x 0.18	–	2 x 0.22	=	39.20 MIN

Beam Direction
Z Axis, Scale 1:1
X Axis, Scale 1:100

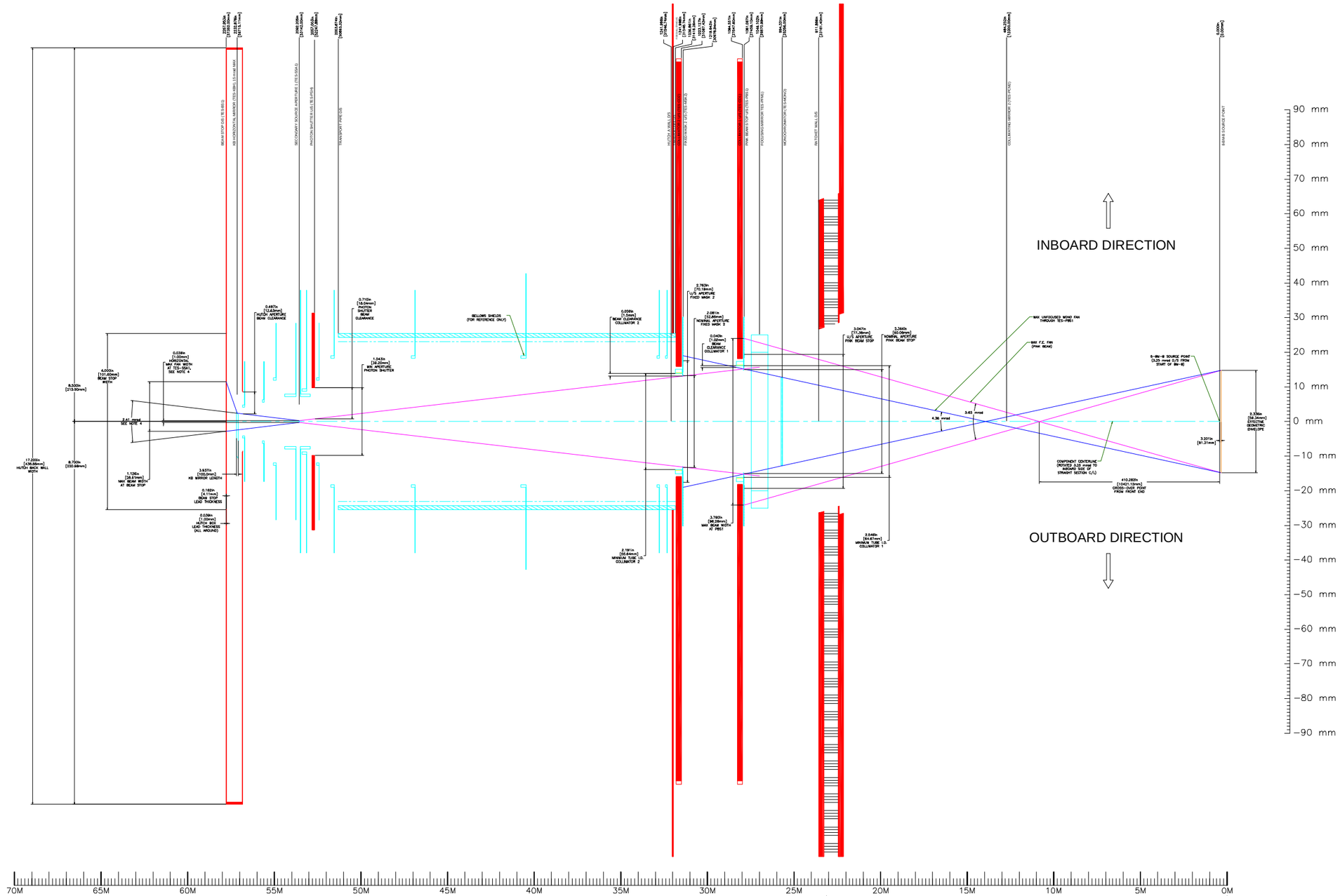

MAXIMUM SYNCHROTRON RAY TRACING - HORIZONTAL

Scale 1:75

SEE FRONT END RAY TRACING
SR-FE-3PW-5001

E	PD-TES-RAYT-0001	A
SHEET SIZE	DRAWING-PART NUMBER	REVISION
E-SHAD RISK LEVEL A-1	SHEET 2 OF 8	

TABLE OF TOLERANCED DIMENSIONS (mm)								
LINE	DESCRIPTION	NOMINAL	±	FABRICATION	±	POSITION	=	TOTAL
1	PINK BEAM STOP 1 U/S APERTURE	29.07	+	2 x 0.19	+	2 x 0.22	=	29.89 MAX
2	PINK BEAM STOP 1 BEAM DEFINING APERTURE	11.74	+	2 x 0.18	+	2 x 0.22	=	12.54 MAX
3	FIXED MASK 2 U/S APERTURE	35.74	+	2 x 0.19	+	2 x 0.22	=	36.56 MAX
4	FIXED MASK 2 BEAM DEFINING APERTURE	18.41	+	2 x 0.18	+	2 x 0.22	=	19.21 MAX
5	BREMSSTRAHLUNG COLLIMATOR (CO1)	15.38	−	2 x 0.18	−	2 x 0.22	=	14.58 MIN
6	BREMSSTRAHLUNG COLLIMATOR (CO2)	25.66	−	2 x 0.18	−	2 x 0.22	=	24.86 MIN
7	PHOTON SHUTTER APERTURE	25.00	−	2 x 0.18	−	2 x 0.22	=	24.20 MIN

Beam Direction
Z Axis, Scale 1:1
Y Axis, Scale 1:100

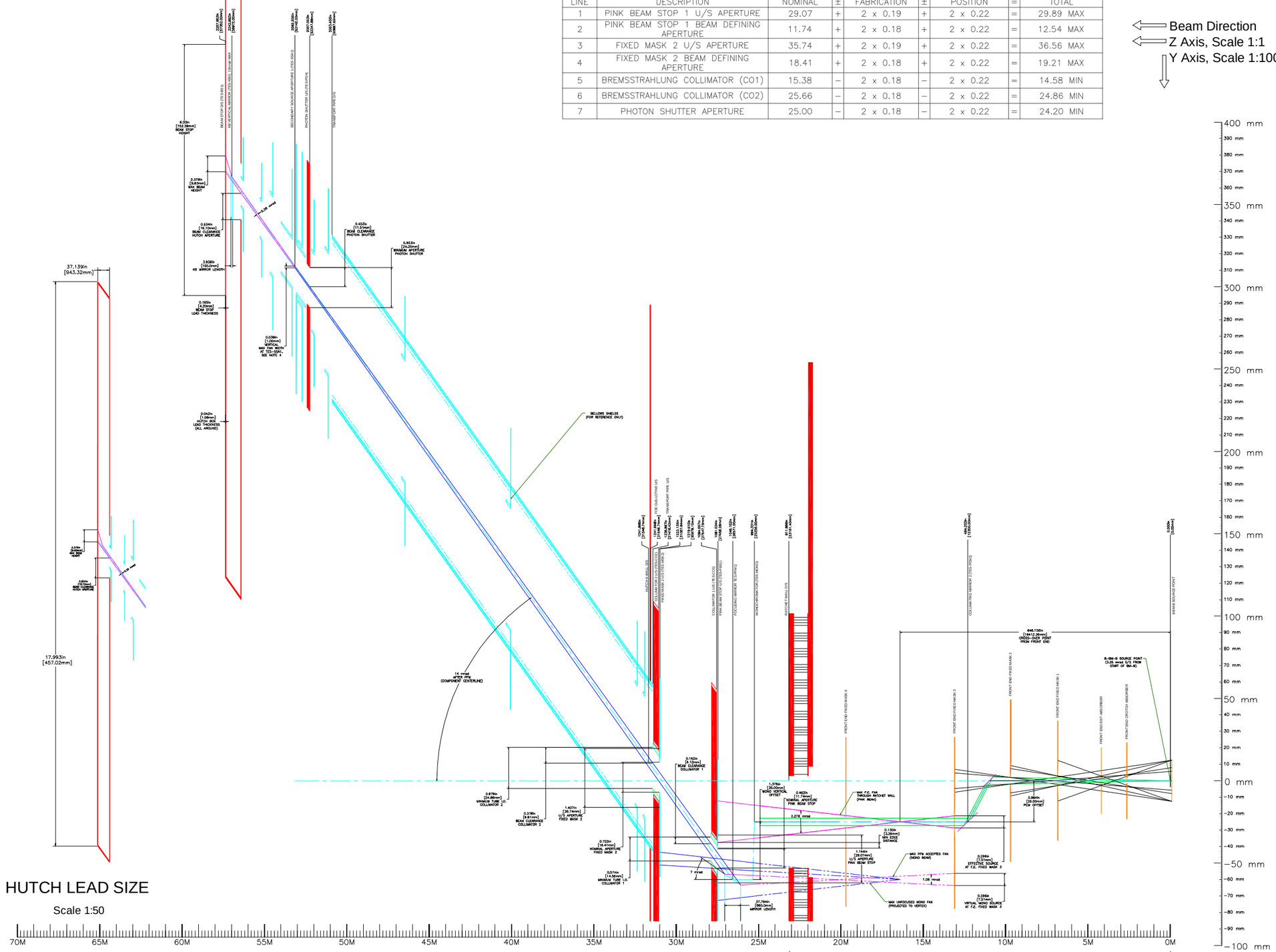

E | PD-TES-RAYT-0001 | A
DRAWING/PART NUMBER | REVISION
ES&HQ RISK LEVEL A-1
SHEET 3 OF 8

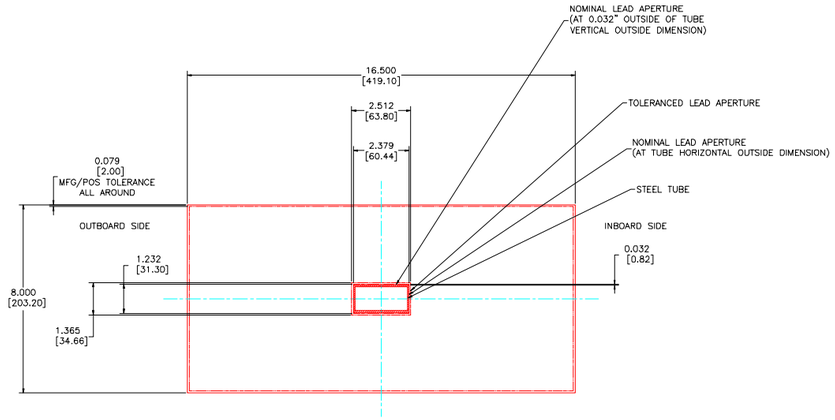

LEAD STOP (TES-CO2/BRS)

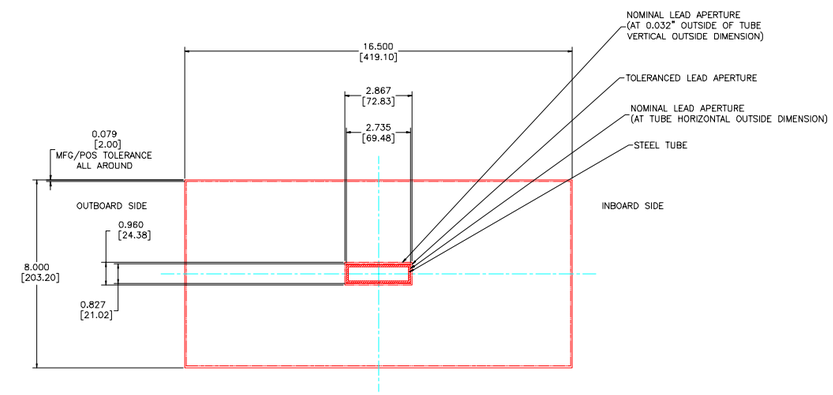

LEAD COLLIMATOR (TES-CO1)

LEAD COLLIMATOR & STOP DETAILS

Scale 1:2

E	PD-TES-RAYT-0001	A
ESHEQ RISK LEVEL A-1	SHEET 6 OF 8	

TABLE OF TOLERANCED DIMENSIONS (mm)									
LINE	DESCRIPTION	NOMINAL	±	FABRICATION	±	POSITION	=	TOTAL
1	PINK BEAM STOP 1 U/S APERTURE	77.38	+	2 x 0.19	+	2 x 0.22	=	78.21 MAX
2	PINK BEAM STOP 1 BEAM DEFINING APERTURE	60.06	+	2 x 0.18	+	2 x 0.22	=	60.86 MAX
3	FIXED MASK 2 U/S APERTURE	70.19	+	2 x 0.19	+	2 x 0.22	=	71.01 MAX
4	FIXED MASK 2 BEAM DEFINING APERTURE	52.86	+	2 x 0.18	+	2 x 0.22	=	53.66 MAX

TABLE OF TOLERANCED DIMENSIONS (mm), con't								
LINE	DESCRIPTION	NOMINAL	±	FABRICATION	±	POSITION	=	TOTAL
5	BREMSSTRAHLUNG COLLIMATOR (CO1)	65.47	−	2 x 0.18	−	2 x 0.22	=	64.67 MIN
6	BREMSSTRAHLUNG COLLIMATOR (CO2)	56.44	−	2 x 0.18	−	2 x 0.22	=	55.64 MIN
7	APERTURE FLANGE 3 APERTURE	50.00	+	2 x 0.18	+	2 x 0.22	=	50.80 MAX
8	APERTURE FLANGE 4 APERTURE	25.00	+	2 x 0.18	+	2 x 0.22	=	25.80 MAX
9	PHOTON SHUTTER APERTURE	40.00	−	2 x 0.18	−	2 x 0.22	=	39.20 MIN

Beam Direction
Z Axis, Scale 1:1
X Axis, Scale 1:100

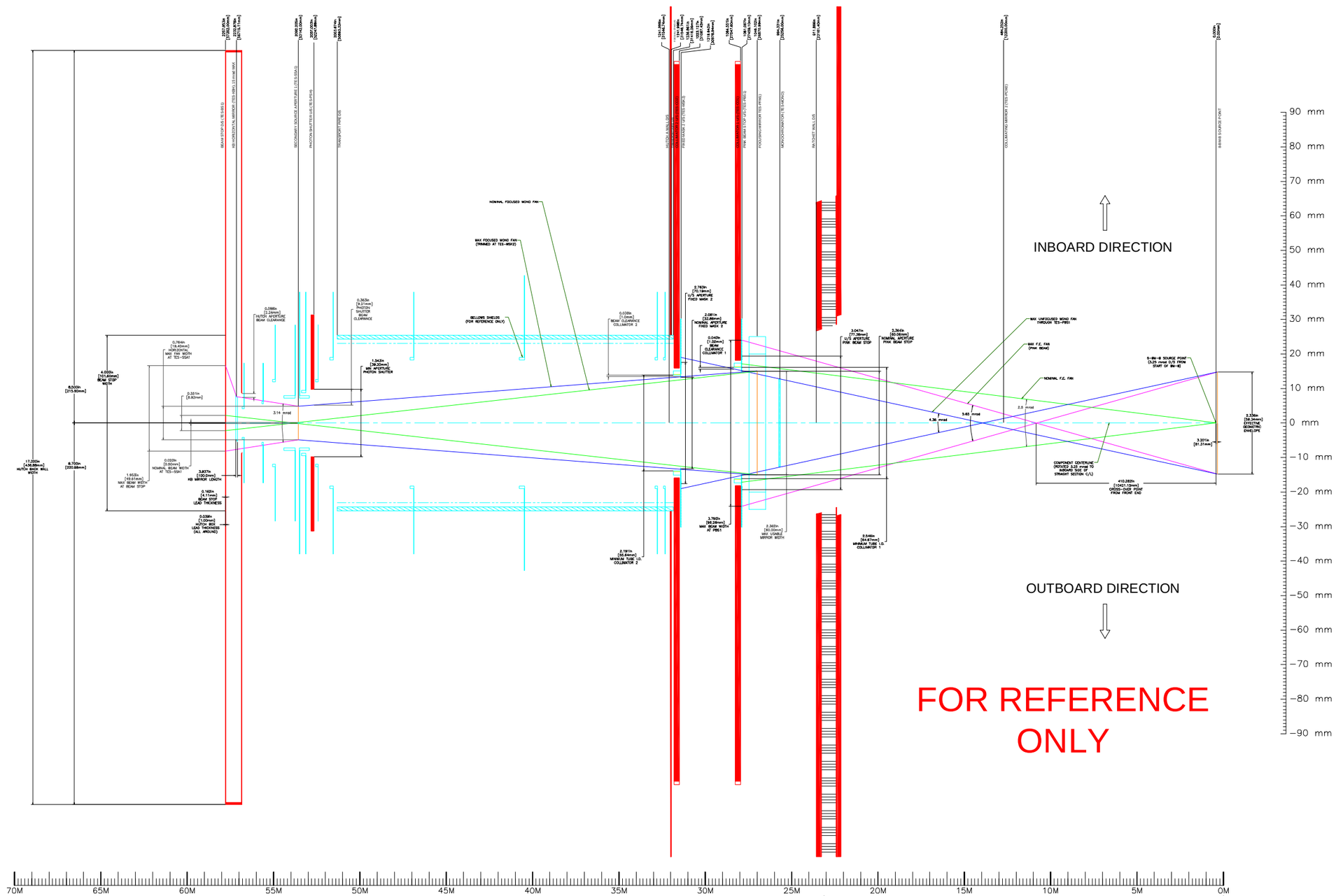

FOR REFERENCE ONLY

MAXIMUM SYNCHROTRON RAY TRACING - HORIZONTAL MISSTEER

Scale 1:75

SEE FRONT END RAY TRACING
SR-FE-3PW-5001

E	PD-TES-RAYT-0001	A
SHEET 100	DRAWING NUMBER	REVISION
ESHEQ RISK LEVEL A-1	SHEET 7 OF 8	

TABLE OF TOLERANCED DIMENSIONS (mm)								
LINE	DESCRIPTION	NOMINAL	±	FABRICATION	±	POSITION	=	TOTAL
1	PINK BEAM STOP 1 U/S APERTURE	29.07	+	2 x 0.19	+	2 x 0.22	=	29.89 MAX
2	PINK BEAM STOP 1 BEAM DEFINING APERTURE	11.74	+	2 x 0.18	+	2 x 0.22	=	12.54 MAX
3	FIXED MASK 2 U/S APERTURE	35.74	+	2 x 0.19	+	2 x 0.22	=	36.56 MAX
4	FIXED MASK 2 BEAM DEFINING APERTURE	18.41	+	2 x 0.18	+	2 x 0.22	=	19.21 MAX
5	BREMSSTRAHLUNG COLLIMATOR (CO1)	15.38	−	2 x 0.18	−	2 x 0.22	=	14.58 MIN
6	BREMSSTRAHLUNG COLLIMATOR (CO2)	25.66	−	2 x 0.18	−	2 x 0.22	=	24.86 MIN
7	APERTURE FLANGE 3 APERTURE	50.00	+	2 x 0.18	+	2 x 0.22	=	50.80 MAX
8	APERTURE FLANGE 4 APERTURE	25.00	+	2 x 0.18	+	2 x 0.22	=	25.80 MAX
9	PHOTON SHUTTER APERTURE	25.00	−	2 x 0.18	−	2 x 0.22	=	24.20 MIN

Beam Direction
Z Axis, Scale 1:1
Y Axis, Scale 1:100

FOR REFERENCE ONLY

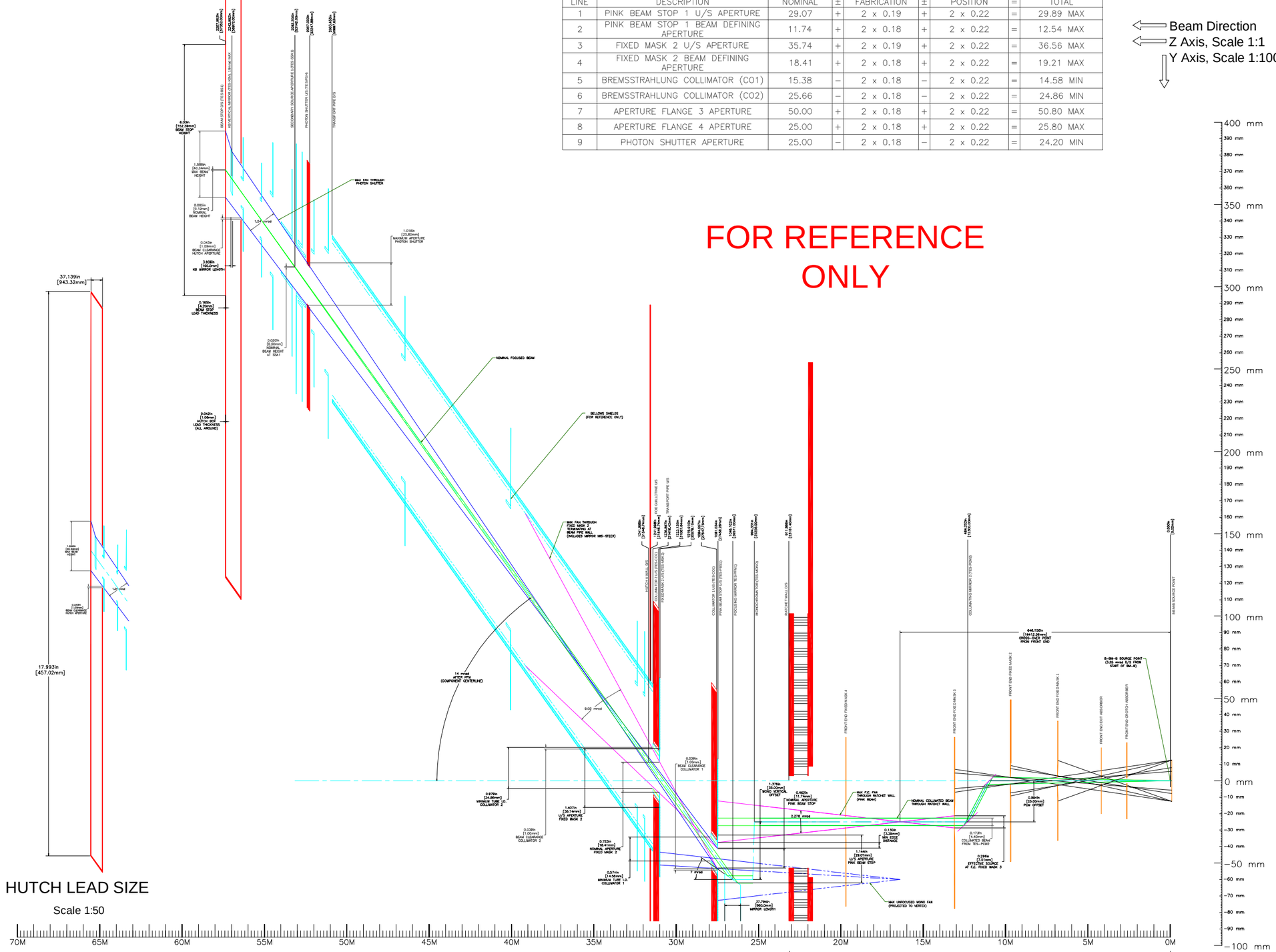

E | PD-TES-RAYT-0001 | A
DRAWING/CAT/ALT NUMBER | REVISION
E-SHED RISK LEVEL A-1 | SHEET 8 OF 8