REVISION HISTORY					
REV	DESCRIPTION	DATE	DESIGNER	CHECKED BY	ENGINEER
A	RELEASE PER ECO-003915	4/2016	R. GAMBELLA	CA/CS	F. DEPAOLA

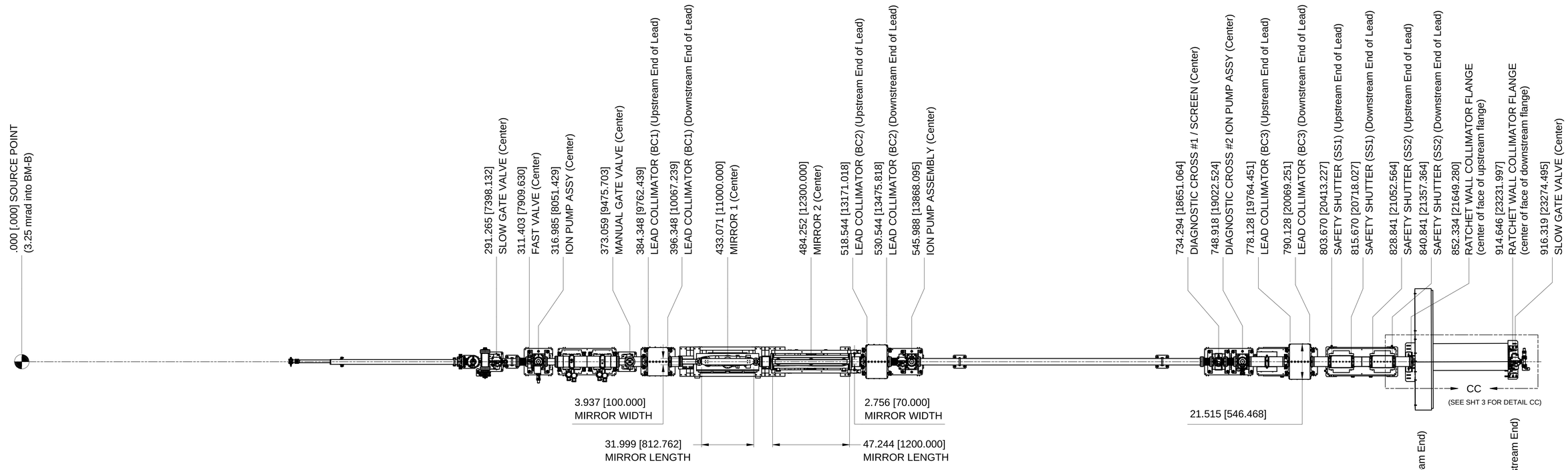

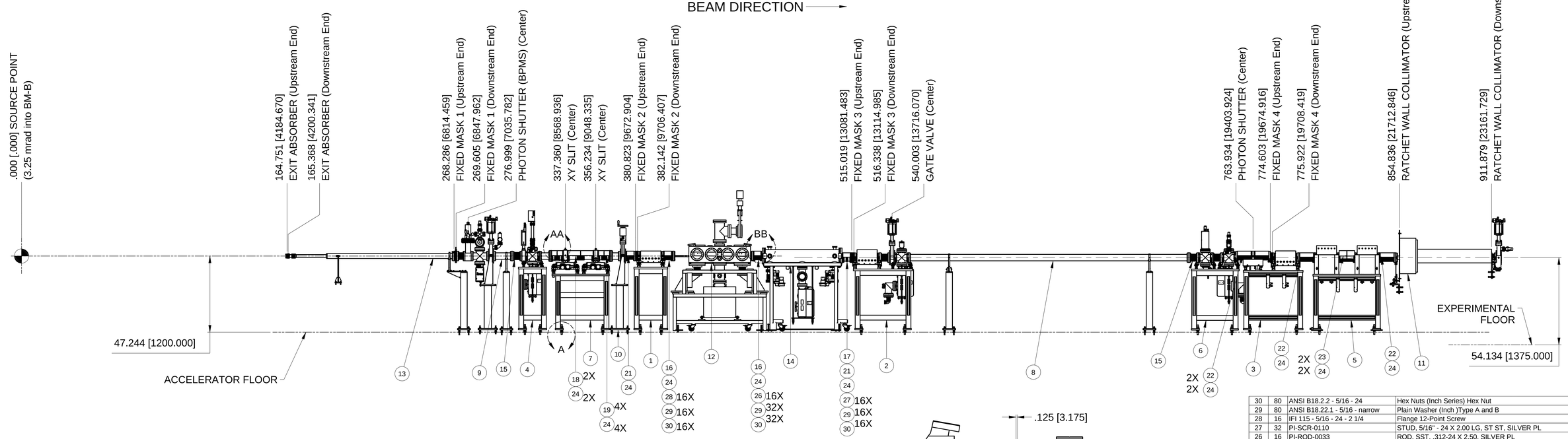

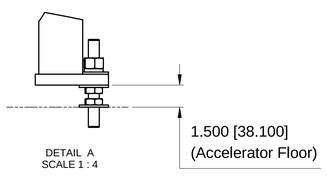

DETAIL A
SCALE 1 : 4

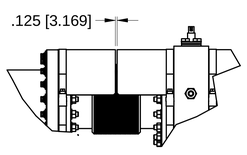

DETAIL AA
SCALE 1 / 4
4X
2-PIECE DESIGN
(INSTALL WITH .125 GAP BETWEEN SHIELDS
CENTERED OVER BELLOWS, USES 2 CLAMPS)

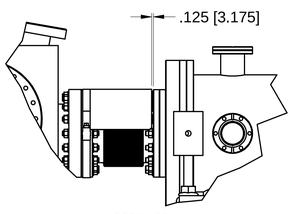

DETAIL BB
SCALE 1 / 4
8X
1-PIECE DESIGN
(INSTALL WITH .125 GAP BETWEEN SHIELD AND
FREE FLANGE, INSTALL CLAMP ON FIXED FLANGE)

NOTES:

1. COMPONENTS LAYOUT AS PER RSI (LT-C-ASD-RSI-002 VERSION 3).
2. ALL ORDINATE DIMENSIONS ARE FROM SOURCE-PONT (3PW).
3. SEE SHEET 3 FOR SURVEY AND ALIGNMENT DIMENSIONS.
4. SEE SHEET 4 FOR COMPONENT HEIGHTS AND ALIGNMENT DIMENSIONS.
5. COMPONENT POSITION TOLERANCE OF ± .008 [.200] IN X AND Y DIRECTION AND ± .020 [.500] IN Z DIRECTION (BEAM DIRECTION).
6. REFERENCE WATER FLOW DIAGRAM SR-FE-3PW-UT-5000.
7. REFERENCE AIR SCHEMATIC SR-FE-3PW-UT-5001.
8. FOR SURVEY PURPOSES, USE FIXED MASK 2 TO ESTABLISH PRACTICAL FRAME.

TOP OFF SAFETY CREDITED ASSEMBLY.
ANY CHANGES TO THIS ASSEMBLY REQUIRE APPROVAL
OF THE TECHNICAL AUTHORITY FOR TOP OFF SAFETY.

COMPONENT	RADIATION SAFETY COMPONENT CHECKLIST	TOP OFF SAFETY SYSTEM
FIXED MASK 1	X	X
FIXED MASK 2	X	X
LEAD COLLIMATOR 1	X	
FIXED MASK 3	X	X
LEAD COLLIMATOR 2	X	
FIXED MASK 4	X	
LEAD COLLIMATOR 3	X	
SAFETY SHUTTER 1	X	
SAFETY SHUTTER 2	X	
RATCHET WALL COLLIMATOR	X	

ITEM	QTY	PART NUMBER	DESCRIPTION	MATERIAL
30	80	ANSI B18.2.2 - 5/16 - 24	Hex Nuts (Inch Series) Hex Nut	SST
29	80	ANSI B18.22.1 - 5/16 - narrow	Plain Washer (Inch)Type A and B	SST
28	16	IFI 115 - 5/16 - 24 - 2 1/4	Flange 12-Point Screw	SST, SILVER PL
27	32	PI-SCR-0110	STUD, 5/16" - 24 X 2.00 LG, ST ST, SILVER PL	SST, SILVER PL
26	16	PI-ROD-0033	ROD, SST, .312-24 X 2.50, SILVER PL	SST, SILVER PL
25	4	PI-GSKT-0006	GASKET, COPPER, 4.01 ID (6.00 CF)	COPPER, OFHC
24	16	PI-CLMP-0056	Stainless Steel Worm-Drive hose clamp 4-1/8 to 7" dia	SST
23	2	SR-FE-SHLD-0002-02	BELLOWS SHIELD, 4.75 lg.	ALUM
22	4	SR-FE-SHLD-0001-11	BELLOWS SHIELD, 9.00 lg.	ALUM
21	3	SR-FE-SHLD-0001-10	BELLOWS SHIELD, 5.00 lg.	ALUM
20	1	SR-FE-SHLD-0001-08	BELLOWS SHIELD, 4.70 lg.	ALUM
19	4	SR-FE-3PW-SHLD-0001-02	BELLOWS SHIELD, 3.86 lg.	ALUM
18	2	SR-FE-3PW-SHLD-0001-01	BELLOWS SHIELD, 8.17 lg.	ALUM
17	1	PI-BLW-0088	BELLOWS, WELDED, 6" CF	SST
16	2	PI-BLW-0087	BELLOWS, WELDED, 6" CF	SST
15	2	PI-BLW-0021	BELLOWS, FORMED, 4" ID 6" CF FLANGE	SST
14	1	PD-TES-PCM-2000	M2 MIRROR, COL, FLAT RE-DIRECTING	
13	1	SR-VA-CHM-6340	EXIT CHM SUBASSY, S6, CELL 8	
12	1	PD-TES-PCM-1000	M1 MIRROR, COL, FLAT RE-DIRECTING	
11	1	SR-FE-3PW-RCO-5000	RATCHET WALL COLLIMATOR, TES	
10	1	SR-FE-3PW-5025	GATE VALVE ASSY	
9	1	SR-FE-3PW-5027	DRIFT PIPE ASSY	
8	1	SR-FE-3PW-5010	DRIFT PIPE ASSY	
7	1	SR-FE-3PW-SLT-2000	TABLE ASSY, SLIT-STAGE	
6	1	SR-FE-3PW-5031	TABLE ASSY, DIAGNOSTIC CROSS	
5	1	SR-FE-3PW-5030	TABLE ASSY, SAFETY SHUTTER	
4	1	SR-FE-3PW-5014	TABLE ASSY, FAST VALVE	
3	1	SR-FE-3PW-5013	TABLE ASSY, PHOTON SHUTTER, FM4, LCO3	
2	1	SR-FE-3PW-5005	TABLE ASSY, LCO2 AND FM3	
1	1	SR-FE-3PW-5003	TABLE ASSY, LCO1 AND FM2	

PARTS LIST

UNLESS OTHERWISE SPECIFIED
ALL DIMENSIONS ARE IN INCHES
DIMENSIONS IN BRACKETS [xx.xx] (WHERE PRESENT) ARE MILLIMETERS AND ARE FOR REFERENCE ONLY
INTERPRET DRAWING AS PER ASME Y14.5-1994 OR Y32.2-1975

DIMENSIONAL TOLERANCES: X. ± 0.060, .X ± 0.030, .XX ± 0.015, .XXX ± 0.005
ANGULAR TOLERANCE: ± .5°
FINISH: 125√
BREAK EDGES & SHARP CORNERS 0.005 MIN. TO 0.030 MAX

BROOKHAVEN NATIONAL LABORATORY
BROOKHAVEN NATIONAL LABORATORY
BROOKHAVEN SCIENCE ASSOCIATES
UPTON, NEW YORK 11973
Exploring Life's Mysteries, Protecting Its Future

NSLS II NATIONAL SYNCHROTRON LIGHT SOURCE II

DRAWN BY	J TUOZZOLO	9/12/2014
CHECKED BY	CA/CS	4/2016
VACUUM APPROVAL	C. HETZEL	4/2016
ENGINEER APPROVAL	F. DEPAOLA	4/2016
SUPERVISOR APPROVAL	S. SHARMA	4/2016
ESH&H APPROVAL	A. ACKERMAN	4/2016
QA APPROVAL	J. HAWKES	4/2016

STORAGE RING
FRONT END, 3PW, CELL 8-BM
LAYOUT, TES BEAMLINE

8-BM BEAMLINE

NEXT ASSY: --
PROJECT: NSLS-II
THIRD ANGLE PROJECTION
SCALE: SEE DWG VIEW
WBS# 6.12
SIZE: E
DRAWING/PART NUMBER: SR-FE-3PW-5000
REVISION: A
ESH&Q RISK LEVEL: A-1
SHEET 1 OF 4

C:\Mech-Eng\LT\SR\FE\3PW\SR-FE-3PW-5000.dwg

RELEASED + EFFECTIVE

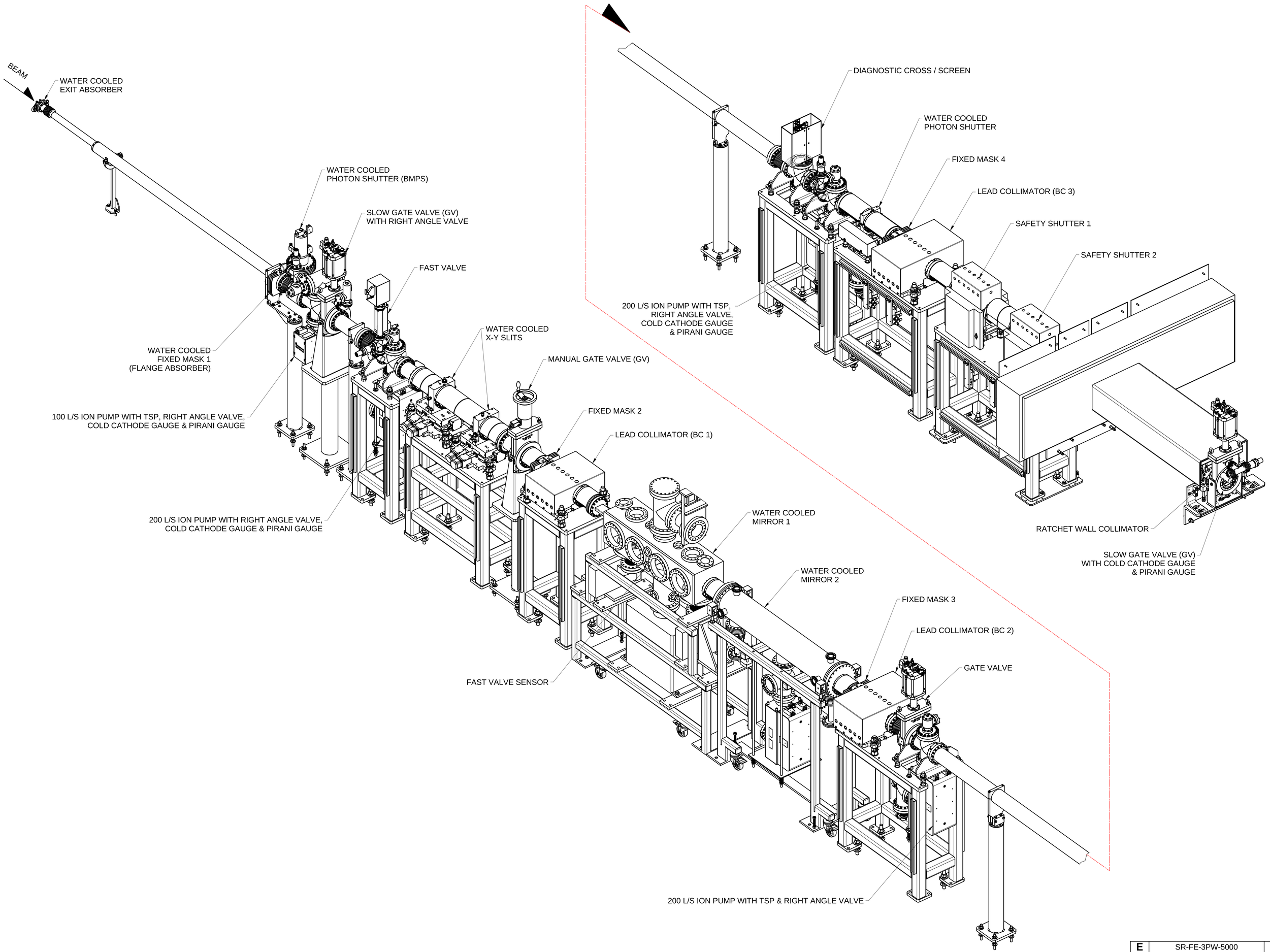

E SHEET SIZE	SR-FE-3PW-5000 DRAWING/PART NUMBER	A REVISION
ESH&Q RISK LEVEL A-1		SHEET 2 OF 4

C:\Mech-Eng\LTS\SR\FE\3PW\SR-FE-3PW-5000.dwg

RELEASED + EFFECTIVE

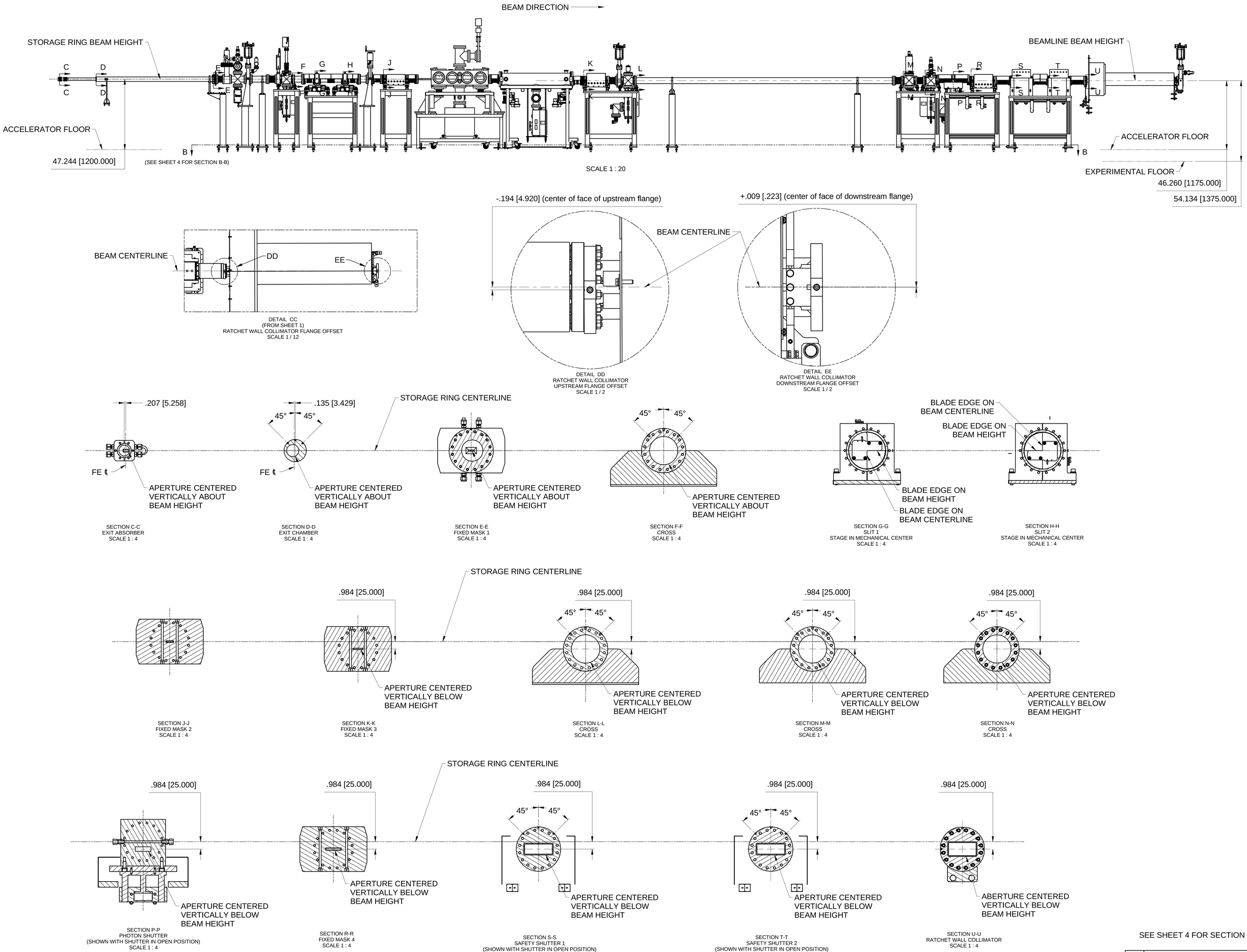

SEE SHEET 4 FOR SECTION B-B

E	SR-FE-3PW-5000	A
SHEET SIZE	DRAWING/PART NUMBER	REVISION
ESH&Q RISK LEVEL A-1	SHEET 3 OF 4	

C:\Mech-Eng\LT\SR\FE\3PW\SR-FE-3PW-5000.idw

RELEASED – EFFECTIVE

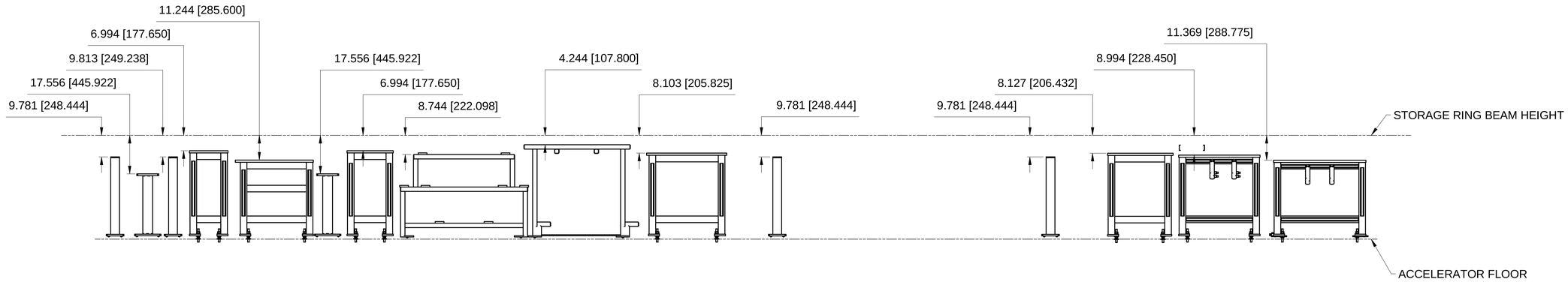

PEDESTAL AND TABLE HEIGHT
SCALE 1 : 20

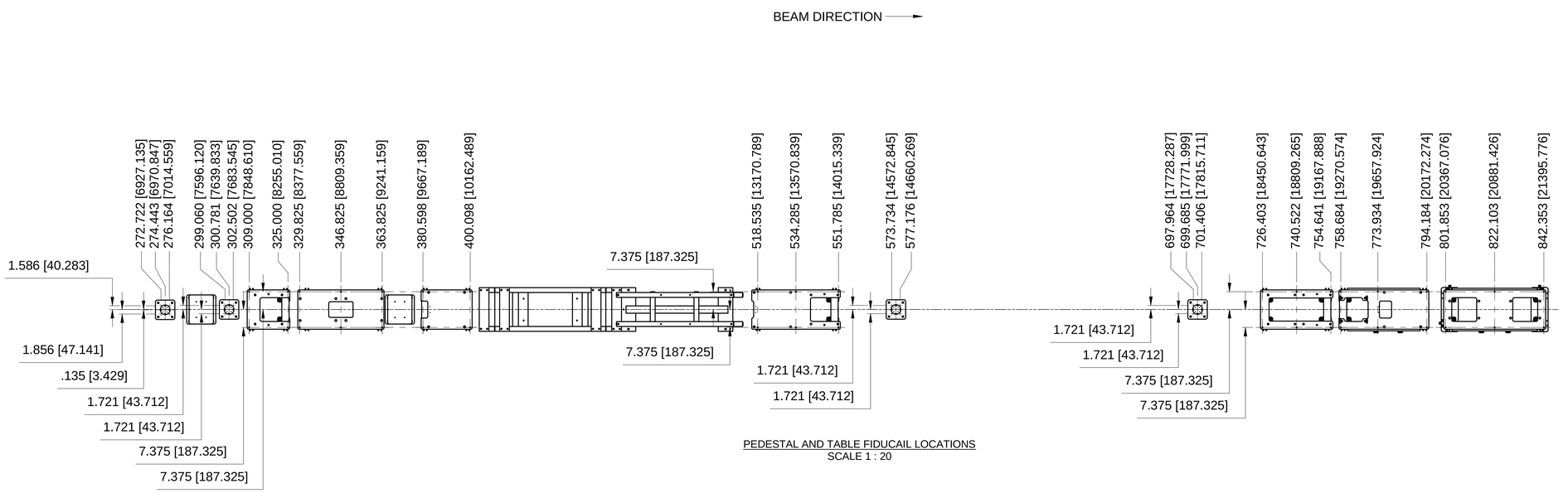

PEDESTAL AND TABLE FIDUCAIL LOCATIONS
SCALE 1 : 20

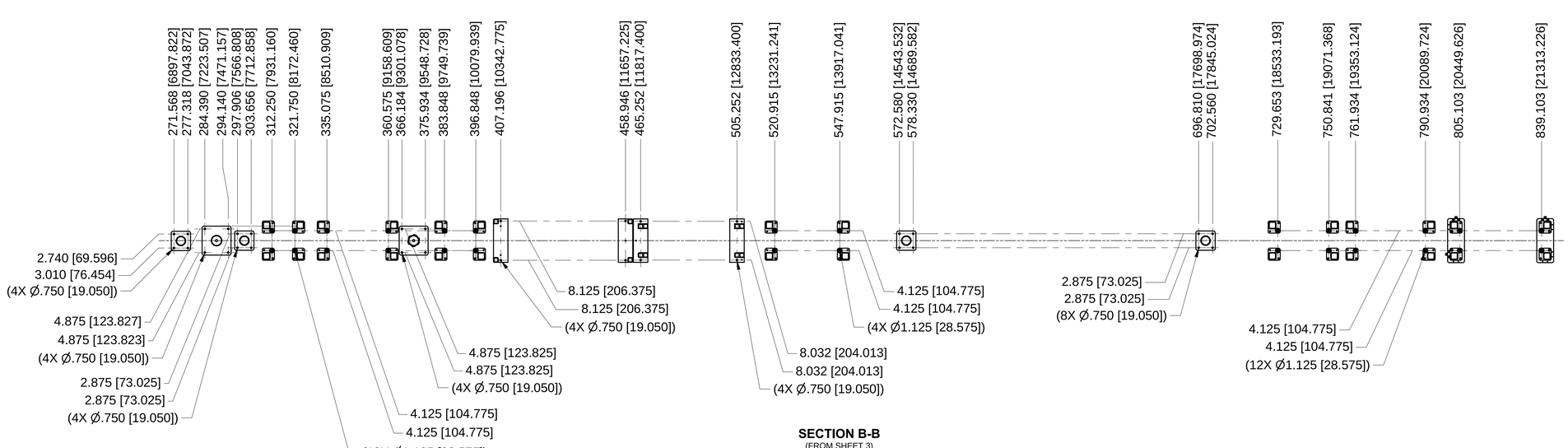

SECTION B-B
(FROM SHEET 3)
PEDESTAL AND TABLE FLOOR MOUNTING LOCATIONS
SCALE 1 : 20

NOTES:

1. FOR Ø1.125 [28.575mm] HOLES USE "3/4" DROP-IN ANCHORS P/N PI-HDW-0021.
2. FOR Ø.750 [19.050mm] HOLES USE "1/2" DROP-IN ANCHORS P/N PI-HDW-0040.

E	SR-FE-3PW-5000	A
SHEET SIZE	DRAWING/PART NUMBER	REVISION
ESH&Q RISK LEVEL A-1	SHEET 4 OF 4	

C:\Mech-Eng\LT\SR\FE\3PW\SR-FE-3PW-5000.idw

RELEASED – EFFECTIVE