12-ID Soft Matter Interfaces (SMI) Beamline

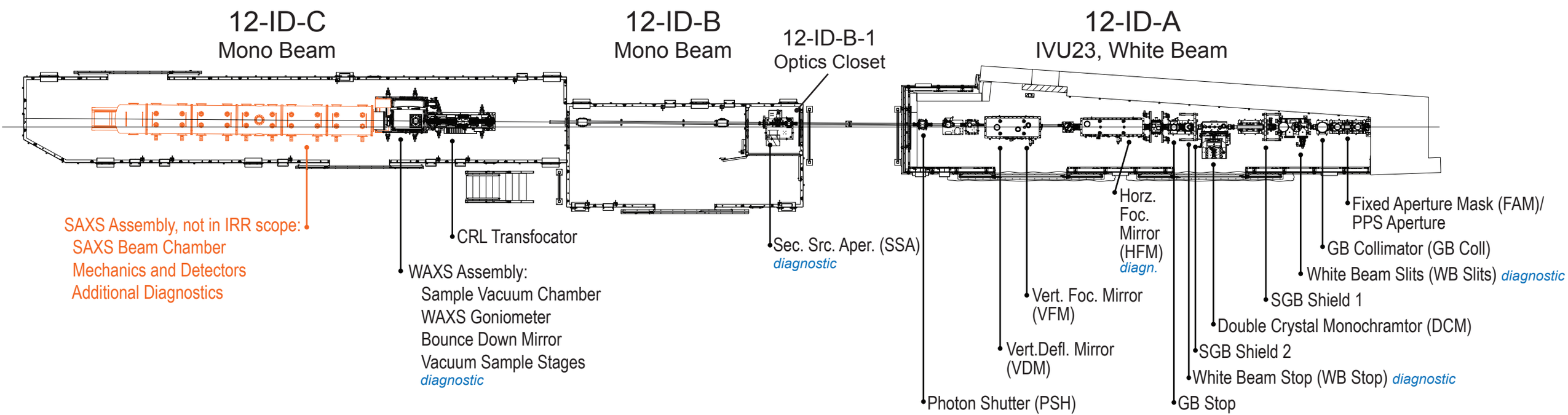

REVISION HISTORY					
REV	DESCRIPTION	DATE	DESIGNER	CHECKED BY	ENGINEER
A	RELEASED PER ECO-003489	07/2016	C. STELMACH	J. FABIJANIC	S. COBURN

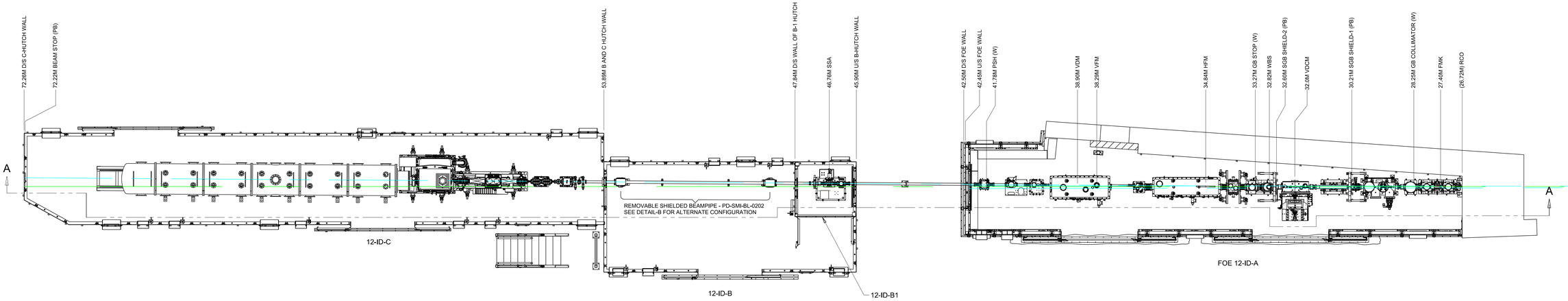

Beam Direction

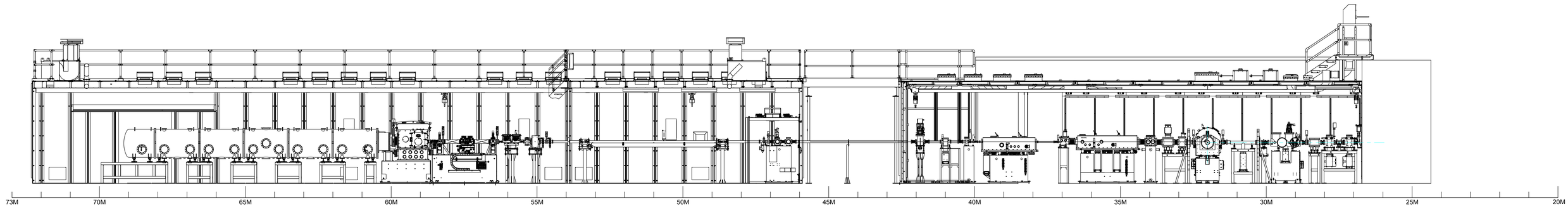

SECTION A-A
SCALE 1 / 50

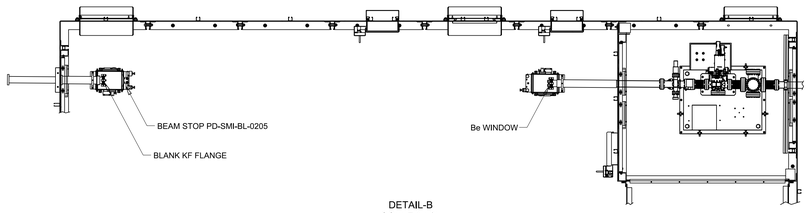

DETAIL-B
SCALE 1 : 25
ALTERNATE CONFIGURATION
SHIELDED BEAMPIPE REMOVED
Be WINDOW, BEAM STOP AND BLANK FLANGE INSTALLED

NOTES:
1. FE REFERENCE DRAWING SR-FE-IVU12-1001 REV B.
2. THE CENTER OF STRAIGHT IS THE ORIGIN FOR ALL DIMENSIONS UNLESS OTHERWISE NOTED.
3. BLUE AND MAGENTA COLORED RAYS ARE DETERMINED BY TOLERANCED APERTURES.
4. GREEN COLORED RAYS ARE DETERMINED BY NOMINAL APERTURES.

SPECIFICATIONS		REFERENCE
Project	NEXT PROJECT	NX-C-XFD-RSI-001 (VERSION 5)
Source	IVU23-2.8m	NX-C-XFD-RSI-001 (VERSION 5)
Beam Line Name	Soft Matter Interfaces	NX-C-XFD-RSI-001 (VERSION 5)
Abbreviation	SMI	NX-C-XFD-RSI-001 (VERSION 5)
Period of Insertion Device	D/S: 23mm, U/S: Not Installed	NX-C-XFD-RSI-001 (VERSION 5)
Long / Short Straight / Cell	LONG, 12-ID	NX-C-XFD-RSI-001 (VERSION 5)
Canting Angle	2 mrad asymmetric: D/S 0.641 mrad I/B, U/S: 1.359 mrad O/B	SR-ID-SMI-IVU-1000 (REV. B)
Length of Source	2800 mm	NX-C-XFD-RSI-001 (VERSION 5)
Location of Center of Sources (from Center of Straight)	D/S: 0.601m, U/S: -2.676m	SR-ID-SMI-IVU-1000 (REV. B)
Ray Tracing Procedure		PS-C-XFD-PRC-008 (Version 2)
Front End Ray Tracing Drawing		SR-FE-IVU12-1001 (REV. B)

ABBREVIATIONS:
DS - DOWNSTREAM
FMK - FIXED MASK
FOE - FRONT OPTICS ENCLOSURE
GB - GASEOUS BREMSSTRAHLUNG
HFM - HORIZONTAL FOCUSING MIRROR
PB - LEAD
PPS - PERSONAL PROTECTION SYSTEM
PSH - PHOTON SHUTTER
RCO - RATCHET WALL COLLIMATOR
SGB - SECONDARY GASEOUS BREMSSTRAHLUNG
SSA - SECONDARY SOURCE APERTURE
US - UPSTREAM
VDCM - VERTICAL OFFSET DOUBLE CRYSTAL MONOCHROMATOR (SMI)
VDM - VERTICAL DEFLECTION MIRROR
VFM - VERTICAL FOCUSING MIRROR
W - TUNGSTEN
WBS - WHITE BEAM STOP

SMI BEAMLINE LAYOUT 12-ID

UNLESS OTHERWISE SPECIFIED
ALL DIMENSIONS ARE IN INCHES
DIMENSIONS IN BRACKETS [xx.xx] (WHERE PRESENT) ARE MILLIMETERS AND ARE FOR REFERENCE ONLY
INTERPRET DRAWING AS PER ANSI Y14.5-1994 OR Y32.2-1975
DIMENSIONAL TOLERANCES: ANGULAR TOLERANCE ± .5°
X ± 0.080
.X ± 0.030
.XX ± 0.015
.XXX ± 0.005
FINISH 125
BREAK EDGES & SHARP CORNERS 0.005 MIN. TO 0.030 MAX.
THIRD ANGLE PROJECTION
SCALE: NOTED

BROOKHAVEN NATIONAL LABORATORY
BROOKHAVEN NATIONAL LABORATORY
BROOKHAVEN SCIENCE ASSOCIATES
UPTON, NEW YORK 11973
Exploring Life's Mysteries, Protecting its Future

NSLS II NATIONAL SYNCHROTRON LIGHT SOURCE II

DRAWN BY	C. STELMACH	03/2016
CHECKED BY	J. FABAJANIC	04/2016
VACUUM APPROVAL		
ENGINEER APPROVAL	S. COBURN	04/2016
SUPERVISOR APPROVAL	E. DIMASI	04/2016
ES&H APPROVAL	L. STEIGLER	04/2016
QA APPROVAL	J. ZIPPER	04/2016

PHOTON DIVISION
SMI RAY TRACING
SMI BEAMLINE RAYTRACING

E — SHEET SIZE
PD-SMI-RAYT-0001 — DRAWING/PART NUMBER
A — REVISION

NEXT ASSY:
PROJECT: PHOTON DIVISION
ESH&Q RISK LEVEL: A-1
WBS# 2.10.02
SHEET 1 OF 10

PD:SMI/RAYT/PD-SMI-RAYT-0001