| REVISION HISTORY | | | | |
|---|---|---|---|---|
| REV | DESCRIPTION | DATE | DESIGNER | CHECKED BY | ENGINEER |
| A | RELEASE PER ECO 001998 | 1/2014 | D. PULEO | C. AMARITO | A. HUSSAIN |
| B | RELEASE PER ECO 002307 | 5/2014 | P. SCHNEIDER | C. AMARITO | A. HUSSAIN |

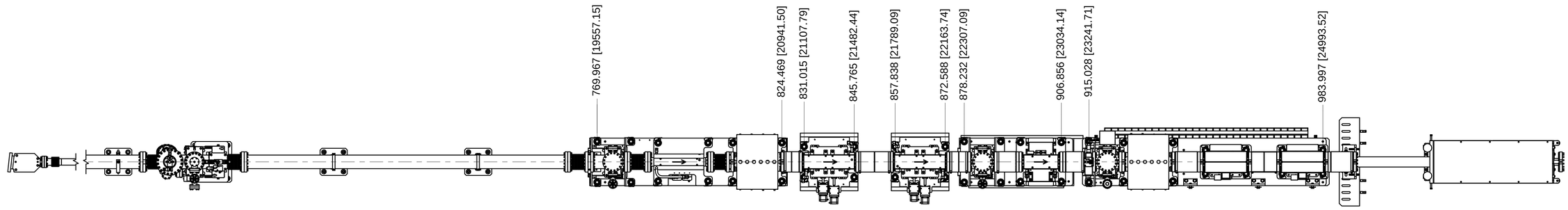


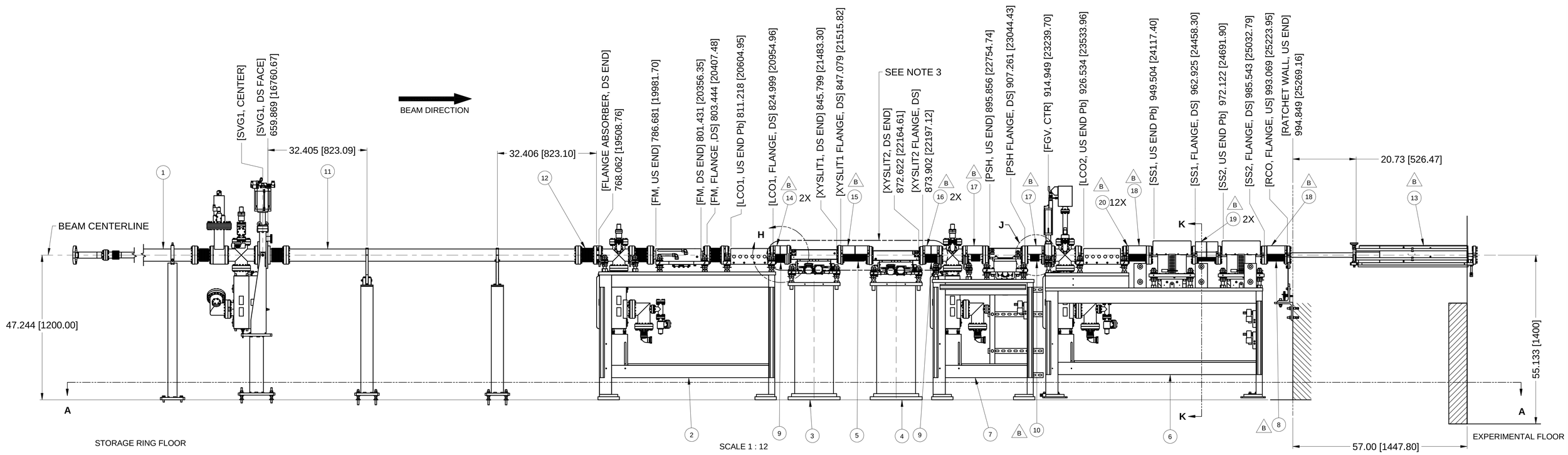


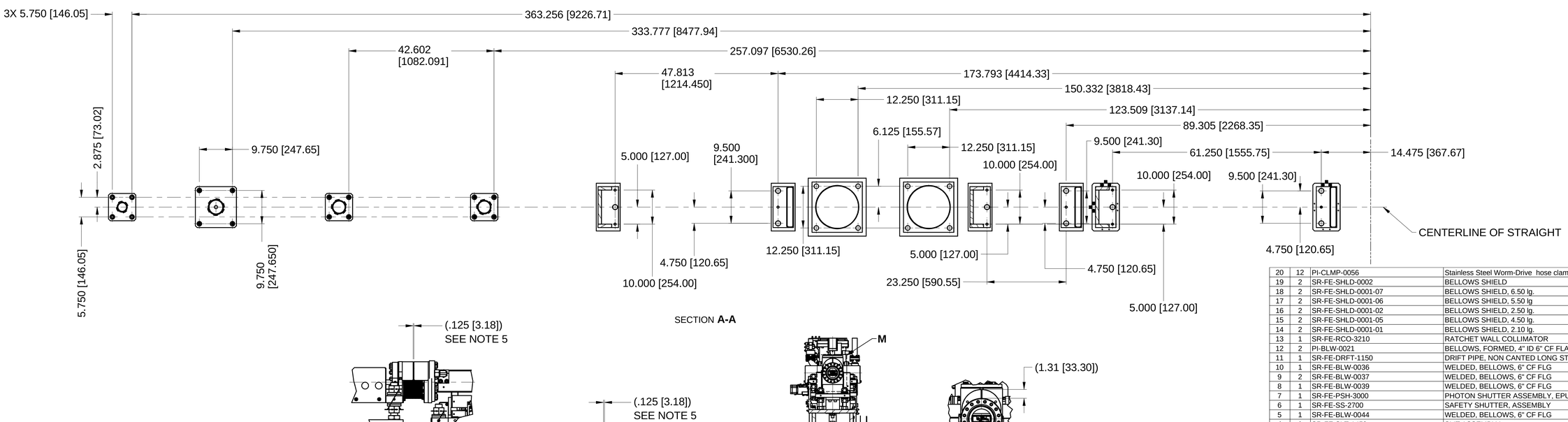


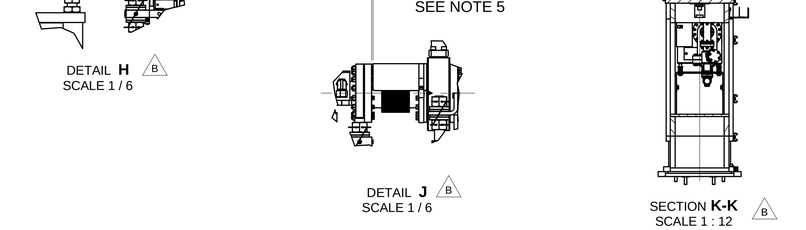


NOTES:

1. ALL ORDINATE DIMENSIONS ARE FROM MID-PONT OF INSERTION STRAIGHT
2. USE DRILLING FIXTURE SR-FE-FIX-1000 FOR ALL HOLES IN FLOOR.
3. FOR INITIAL CONFIGURATION WITHOUT SLIT ASSEMBLY COMPONENTS, STORE ITEMS 5 & 9, AND INSTALL THE FOLLOWING ITEMS:

   SR-FE-DRFT-1181 DRIFT PIPE QTY 1
   PI-BLW-0021 BELLOWS FORMED QTY 2

4. SEE SHEET 2 OF 2 FOR SURVEY AND ALIGNMENT DIMENSIONS.
5. INSTALL SHIELDS, ITEMS 14, 15, 16 & 19, WITH A .125 GAP BETWEEN SHIELDS. INSTALL SHIELDS, ITEMS 17 & 18, WITH A .125 GAP BETWEEN THE FREE FLANGE AND THE SHIELD .

| ITEM | QTY | PART NUMBER | DESCRIPTION |
|---|---|---|---|
| 20 | 12 | PI-CLMP-0056 | Stainless Steel Worm-Drive hose clamp 4-1/8 to 7" clamp diameter range |
| 19 | 2 | SR-FE-SHLD-0002 | BELLOWS SHIELD |
| 18 | 2 | SR-FE-SHLD-0001-07 | BELLOWS SHIELD, 6.50 lg. |
| 17 | 2 | SR-FE-SHLD-0001-06 | BELLOWS SHIELD, 5.50 lg |
| 16 | 2 | SR-FE-SHLD-0001-02 | BELLOWS SHIELD, 2.50 lg. |
| 15 | 2 | SR-FE-SHLD-0001-05 | BELLOWS SHIELD, 4.50 lg. |
| 14 | 2 | SR-FE-SHLD-0001-01 | BELLOWS SHIELD, 2.10 lg. |
| 13 | 1 | SR-FE-RCO-3210 | RATCHET WALL COLLIMATOR |
| 12 | 2 | PI-BLW-0021 | BELLOWS, FORMED, 4" ID 6" CF FLANGE |
| 11 | 1 | SR-FE-DRFT-1150 | DRIFT PIPE, NON CANTED LONG STRAIGHT, ASSY |
| 10 | 1 | SR-FE-BLW-0036 | WELDED, BELLOWS, 6" CF FLG |
| 9 | 2 | SR-FE-BLW-0037 | WELDED, BELLOWS, 6" CF FLG |
| 8 | 1 | SR-FE-BLW-0039 | WELDED, BELLOWS, 6" CF FLG |
| 7 | 1 | SR-FE-PSH-3000 | PHOTON SHUTTER ASSEMBLY, EPU |
| 6 | 1 | SR-FE-SS-2700 | SAFETY SHUTTER, ASSEMBLY |
| 5 | 1 | SR-FE-BLW-0044 | WELDED, BELLOWS, 6" CF FLG |
| 4 | 1 | SR-FE-SLT-1450 | SLIT,ASSEMBLY |
| 3 | 1 | SR-FE-SLT-1400 | SLIT,ASSEMBLY |
| 2 | 1 | SR-FE-MSK-3200 | FIXED MASK, ASSY, SIX BEAMLINE |
| 1 | 1 | SR-VA-CHM-3210 | EXIT CHM SUBASSY, UNDULATORS (S3) |

PARTS LIST

UNLESS OTHERWISE SPECIFIED
ALL DIMENSIONS ARE IN INCHES
DIMENSIONS IN BRACKETS [xx.xx] (WHERE PRESENT) ARE MILLIMETERS AND ARE FOR REFERENCE ONLY
INTERPRET DRAWING AS PER ASME Y14.5M-1994 OR Y32.2-1975
DIMENSIONAL TOLERANCE: X. ± 0.060, .X ± 0.030, .XX ± 0.015, .XXX ± 0.005
ANGULAR TOLERANCE: ±.5°
FINISH: 125
BREAK EDGES & SHARP CORNERS 0.005 MIN. TO 0.030 MAX.

BROOKHAVEN NATIONAL LABORATORY
BROOKHAVEN NATIONAL LABORATORY
BROOKHAVEN SCIENCE ASSOCIATES
UPTON, NEW YORK 11973
Exploring Life's Mysteries, Protecting its Future

NSLS II NATIONAL SYNCHROTRON LIGHT SOURCE II

| | | |
|---|---|---|
| DRAWN BY | D. PULEO | 1/23/2014 |
| CHECKED BY | C.AMARITO | 1/2014 |
| VACUUM APPROVAL | D. HHEUIH | 1/2014 |
| DIAGNOSTIC APPROVAL | O.SINGH | 1/2014 |
| ENGINEER APPROVAL | A. HUSSAIN | 1/2014 |
| SUPERVISOR APPROVAL | S. SHARMA | 1/2014 |
| ES&H APPROVAL | A. ACKERMAN | 1/2014 |
| QA APPROVAL | J. HAWKES | 1/2014 |

STORAGE RING
FRONT END, EPUN1
# Long Straight Front End (SIX)

# 2-ID BEAMLINE

| | | | |
|---|---|---|---|
| NEXT ASSY: | FINAL | | |
| PROJECT: | NSLS-II | | |
| THIRD ANGLE PROJECTION | SCALE: SEE DWG VIEW | WBS# 1.03.04.07.03 | ESH&Q RISK LEVEL A-2 |

E — SHEET SIZE
SR-FE-EPU02-1000 — DRAWING/PART NUMBER
B — REVISION
SHEET 1 OF 2

C:\Mech-Eng\LTSR\FE\EPU\02\SR-FE-EPU02-1000.idw

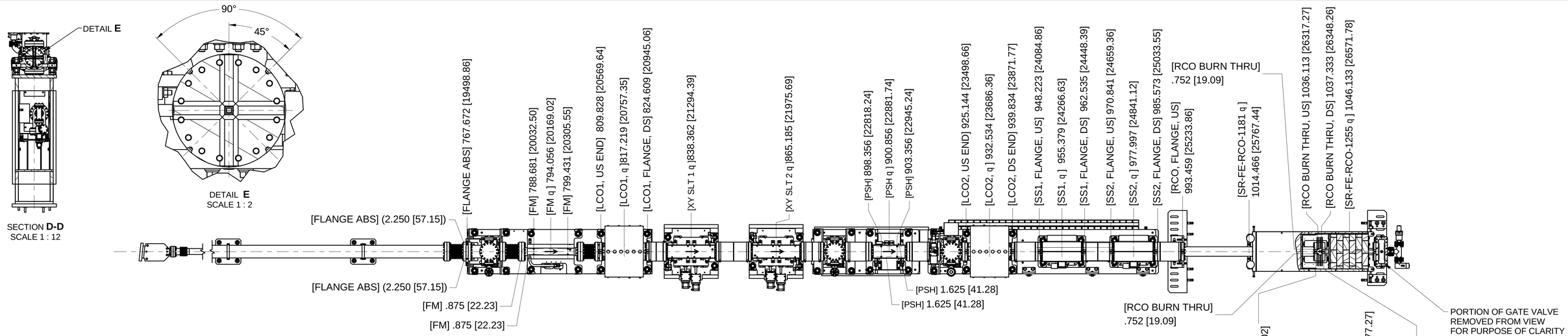


B NOTES:

SURVEY AND ALIGNMENT TOLERANCES TO BE

MAX ` 200µm [.20] IN THE X & Y DIRECTIONS

MAX ` 500µm [.50] IN THE Z DIRECTION

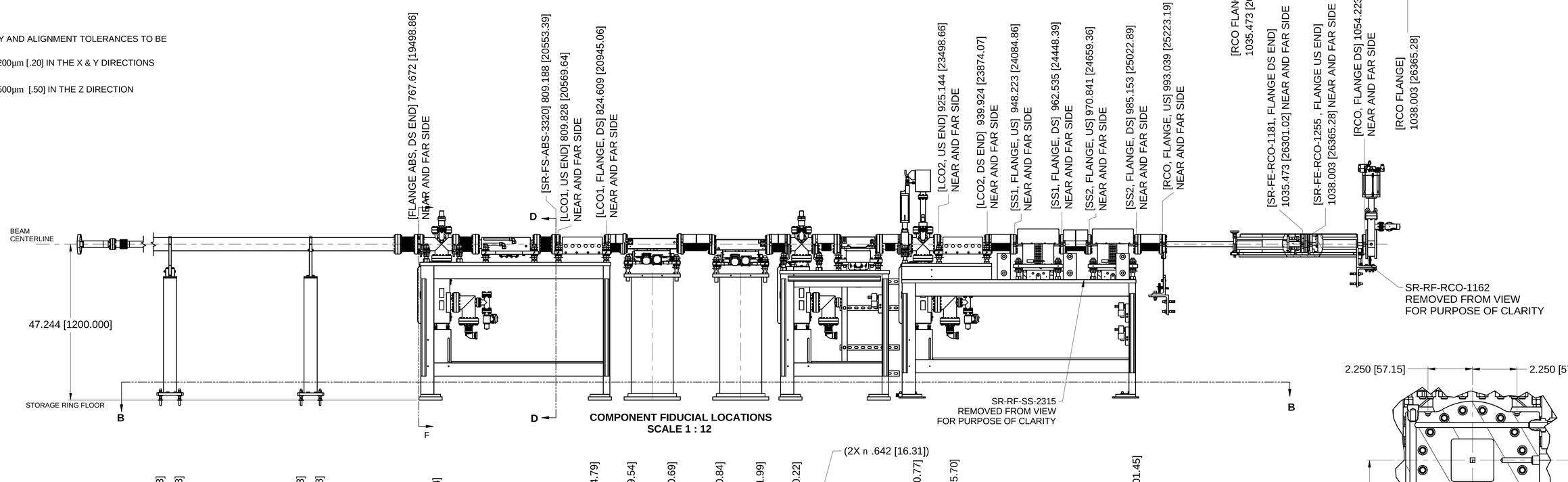


**COMPONENT FIDUCIAL LOCATIONS**
**SCALE 1 : 12**

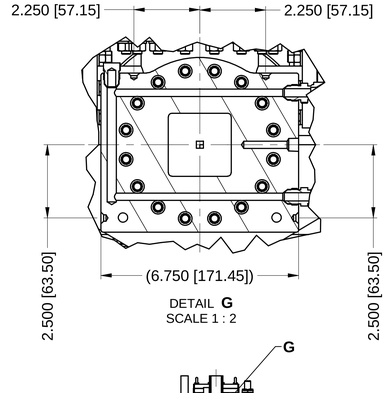


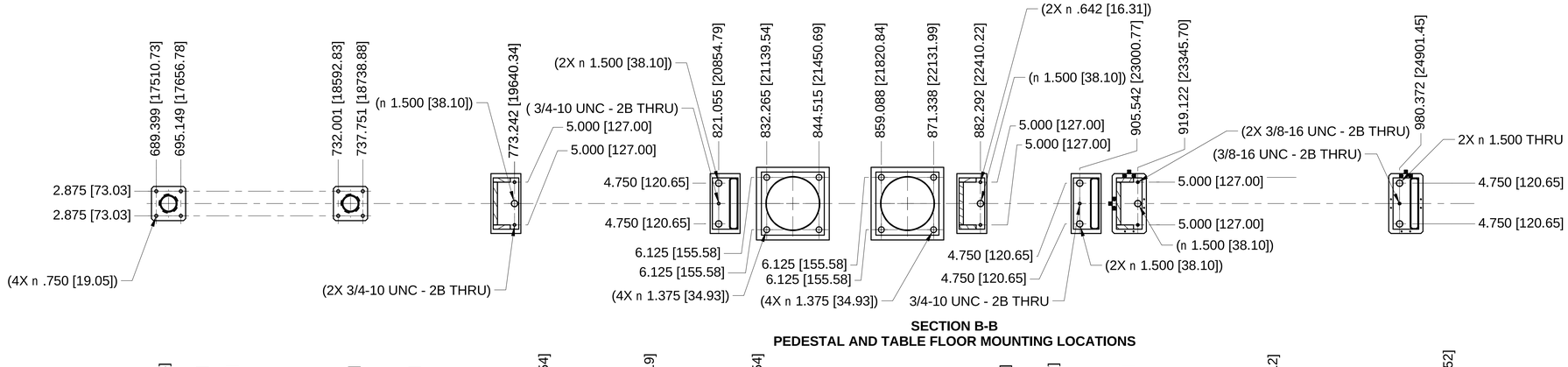


**SECTION B-B**
**PEDESTAL AND TABLE FLOOR MOUNTING LOCATIONS**

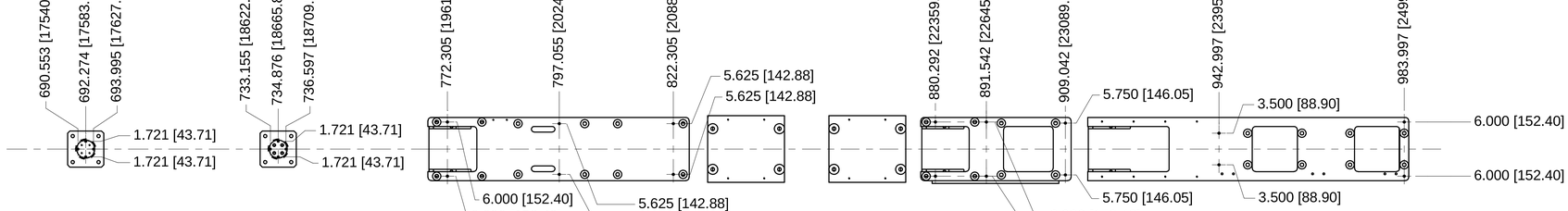


**PEDESTAL AND TABLE FIDUCIAL LOCATIONS**
**SCALE 1 : 12**

| | | |
|---|---|---|
| E (SHEET SIZE) | SR-FE-EPU02-1000 (DRAWING/PART NUMBER) | B (REVISION) |
| ESH&Q RISK LEVEL A-2 | SHEET 2 OF 2 | |

C:\Mech-Eng\LT\SR\FE\EPU\02\SR-FE-EPU02-1000.dwx

| REVISION HISTORY | | | | | |
|---|---|---|---|---|---|
| REV | DESCRIPTION | DATE | DESIGNER | CHECKED BY | ENGINEER |
| A | RELEASE PER ECO-001554 | 2/2014 | D. PULEO | C. AMARITO | A. HUSSAIN |

NOTES:

1. ITEM IDENTIFICATION: METAL STAMP, SCRIBE OR ELECTRO-ETCH PART NO AND APPLICABLE REV LTR USING .25 HIGH CHARACTERS. APPROX LOCATION SHOWN.
2. USE ITEM 22 (COPPER GASKET) WHEN ASSEMBLING Ø 6.00 C.F. FLANGES (8 PL).
3. USE ITEM 21 (COPPER GASKET) WHEN ASSEMBLING n 2.75 C.F. FLANGES (4 PL).
4. INSTALL SAFETY WIRES AFTER FINAL ALIGNMENT.
5. ALL VACUUM COMPONENTS MUST BE CLEANED, BAKED AND PACKAGED PER LT-ENG-RSI-SR-VA-002 PRIOR TO INSTALLATION.
6. INSTALL COVER PLATES W/ GASKETS (PI-FLG-0080) AFTER BAKE PROCESS IS COMPLETED.
7. RAISE PUMP SUPPORT TO ACCEPT FULL WEIGHT OF PUMP. CONFIRM A MINIMUM OF .25" ADDITIONAL SPRING TRAVEL.
8. AFTER FINAL ALIGNMENT, TORQUE NUTS TO 300 FT-LB.
9. FLANGE REQUIREMENTS: THE TIGHTENING PROCESS MUST BE DONE GRADUALLY IN 1/4 TO 1/2 TURN INCREMENTS IN AN ALTERNATING CRISS-CROSS PATTERN UNTIL 15 FT-LB IS ACHIEVED ON 5/16-24 HARDWARE AND 12 FT-LB IS ACHIEVED ON 1/4-28 HARDWARE.
10. USE NUT PLATES WHERE POSSIBLE (PI-NUT-0018 & PI-NUT-0020)
11. FIELD FIT WATER LINES AFTER INSTALLATION

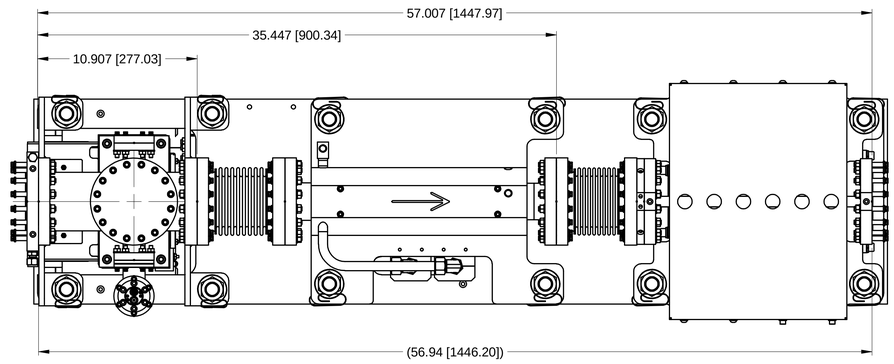


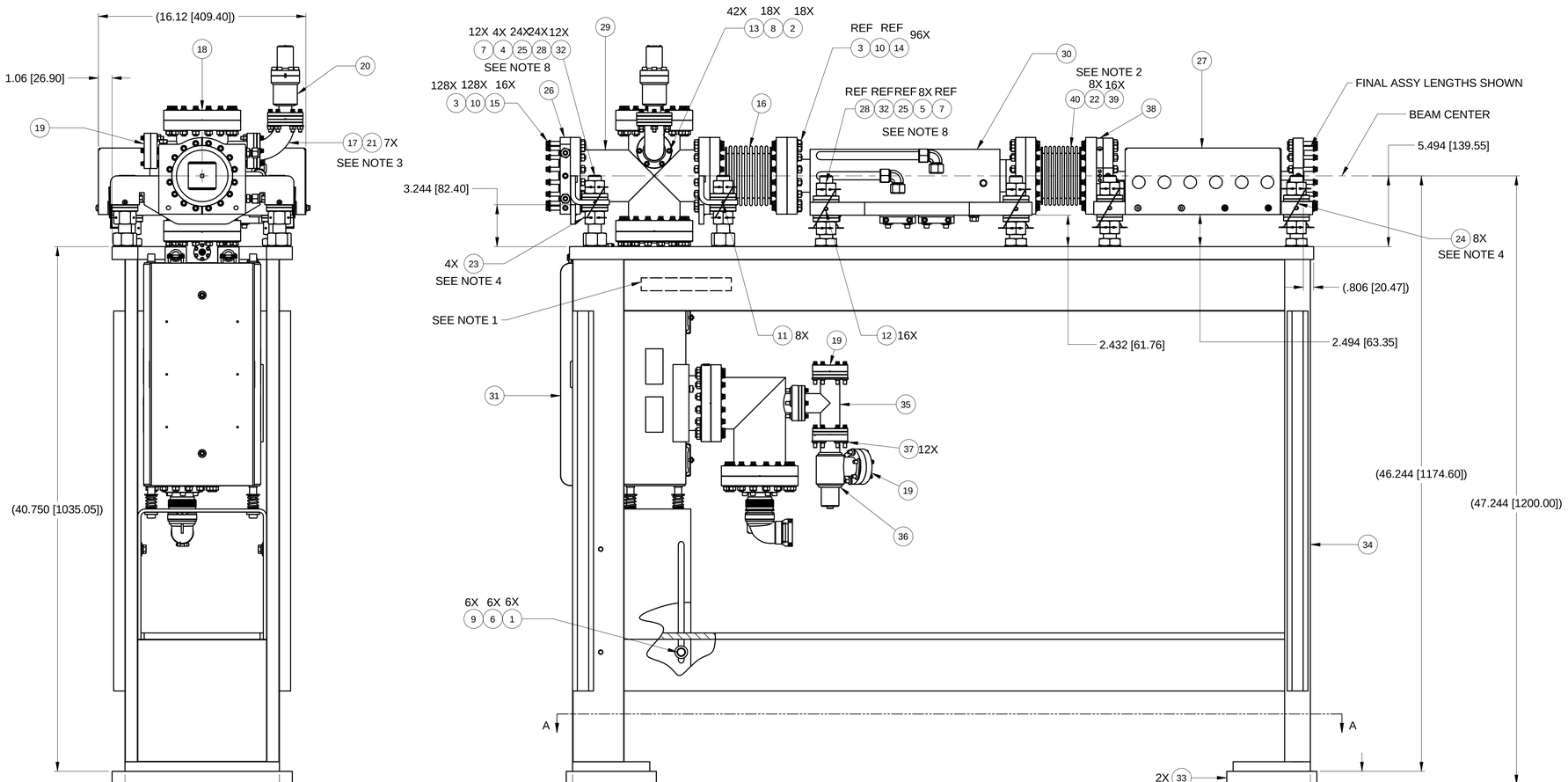


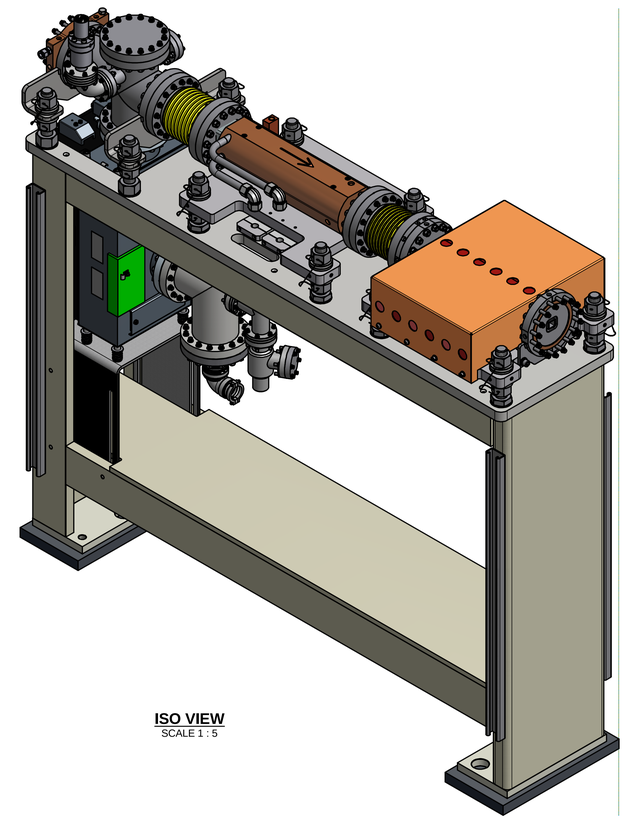

**ISO VIEW**
SCALE 1 : 5

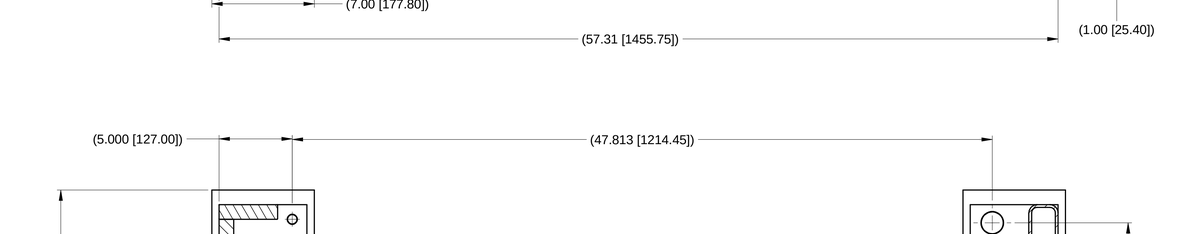


SECTION A-A
SCALE 1 : 4

| ITEM | QTY | PART NUMBER | DESCRIPTION | MATERIAL |
|---|---|---|---|---|
| 40 | 1 | PI-BLW-0051 | BELLOWS, FORMED, 4" ID 6" CF FLANGE | |
| 39 | 16 | IFI 115 - 5/16 - 24 - 2 1/2 | Flange 12-Point Screw | Steel, Mild |
| 38 | 1 | SR-FE-ABS-3220 | FLANGE, BURN THRU, LCO1, SIX, MODIFIED | |
| 37 | 12 | PI-NUT-0020 | PLATE NUT, 2.75 CF | Stainless Steel |
| 36 | 1 | SR-VA-VLV-0001 | VALVE, RIGHT ANGLE, 2.75 FLANGE | |
| 35 | 1 | PI-TEE-0008 | TEE, 2.75 CF FLANGE FITTING | 304 SST |
| 34 | 1 | SR-FE-SP-1820 | STAND, MASK/COLLIMATOR | |
| 33 | 2 | SR-FE-SP-1177 | GROUT PAD, EPOXY | |
| 32 | 12 | SR-FE-SP-0032 | ROD, THREADED, 1-8 UNC-2A, 6.5" | Cold Drawn Steel, C1215 Per ASTM A-108 |
| 31 | 1 | SR-FE-PMP-0020 | ION PUMP ASSY | |
| 30 | 1 | SR-FE-MSK-3201 | MASK ASSY, FIXED APERTURE, SIX | |
| 29 | 1 | SR-FE-MSK-1210 | CROSS, WELDMENT | Welded SST |
| 28 | 24 | SR-FE-MSK-0022 | NUT,SAFETY WIRE | Mild Steel, Zinc Pl |
| 27 | 1 | SR-FE-CO-3220 | COLLIMATOR, LEAD, LCO1, SIX | |
| 26 | 1 | SR-FE-ABS-3200 | 6" FLANGE ABSORBER,SIX | |
| 25 | 24 | PI-WSHR-0011 | WASHER, SPHERICAL, 1" | 12L14L Hardened Steel, Zinc Pl |
| 24 | 8 | PI-WIRE-0002-02 | SAFETY WIRE, 3" | SST |
| 23 | 4 | PI-WIRE-0002-01 | SAFETY WIRE, 2-3/8" | SST |
| 22 | 8 | PI-GSKT-0006 | GASKET, COPPER, 4.01 ID (6.00 CF) | COPPER, OFHC |
| 21 | 7 | PI-GSKT-0003 | GASKET, COPPER, 1.45 ID (2.75 CF) | COPPER, OFHC |
| 20 | 1 | PI-GAGE-0002 | GAUGE, COLD CATHODE | |
| 19 | 3 | PI-FLG-0003 | FLANGE, BLANK, NR, DIA. 2.75 CF | SST, Type 304 Per ASTM A240 |
| 18 | 1 | PI-FLG-0001 | FLANGE, NON-ROTATABLE, 6 IN, BLANK | SST, Austenitic |
| 17 | 1 | PI-ELB-0030 | ELBOW, 2.75 CF FLANGE FITTING | SST |
| 16 | 1 | PI-BLW-0021 | BELLOWS, FORMED, 4" ID 6" CF FLANGE | 300 Series SST |
| 15 | 16 | IFI 115 - 5/16 - 24 - 2 3/4 | Flange 12-Point Screw | 300 Series SST, Silver Pl |
| 14 | 96 | IFI 115 - 5/16 - 24 - 2 | Flange 12-Point Screw | 300 Series SST, Silver Pl |
| 13 | 42 | IFI 115 - 1/4 - 28 - 1 1/2 | Flange 12-Point Screw | 300 Series SST, Silver Pl |
| 12 | 16 | ANSI B18.3 - 3/8-16 UNC x 0.75 | Hexagon Socket Set Screw - Half Dog Point | SST |
| 11 | 8 | ANSI B18.3 - 1/4-20 UNC x 0.5 | Hexagon Socket Set Screw - Half Dog Point | SST |
| 10 | 128 | ANSI B18.22.1 - 5/16 - narrow - Type B | Plain Washer (Inch )Type A and B | SST |
| 9 | 6 | ANSI B18.22.1 - 3/8 - Regular - Type B | Plain Washer (Inch )Type A and B | Mild Steel, Zinc Pl |
| 8 | 18 | ANSI B18.22.1 - 1/4 - narrow - Type B | Plain Washer (Inch )Type A and B | SST |
| 7 | 12 | ANSI B18.22.1 - 1 - narrow - Type B | Plain Washer (Inch )Type A and B | Mild Steel, Zinc Pl |
| 6 | 6 | ANSI B18.21.1 - 0.375 | Helical Spring Lock Washers | Mild Steel, Zinc Pl |
| 5 | 8 | ANSI B18.2.2-1-8 | Hex Nuts (Inch Series) Heavy Hex Jam Nut | Mild Steel, Zinc Pl |
| 4 | 4 | ANSI B18.2.2 -1 - 8 | Hex Nuts (Inch Series) Heavy Hex Nut | Mild Steel, Zinc Pl |
| 3 | 128 | ANSI B18.2.2 - 5/16 - 24 | Hex Nuts (Inch Series) Hex Nut | SST |
| 2 | 18 | ANSI B18.2.2 - 1/4 - 28 | Hex Nuts (Inch Series) Hex Nut | SST |
| 1 | 6 | ANSI B18.2.1 - 3/8-16 UNC - 1.25 | Hex Cap Screw | Mild Steel, Zinc Pl |

PARTS LIST

UNLESS OTHERWISE SPECIFIED
ALL DIMENSIONS ARE IN INCHES
DIMENSIONS IN BRACKETS [xx.xx] WHERE PRESENT ARE MILLIMETERS AND ARE FOR REFERENCE ONLY
INTERPRET DRAWING AS PER ANSI Y14.5-1994 OR Y32.2-1975

DIMENSIONAL TOLERANCES: X. ± 0.060; .X ± 0.030; .XX ± 0.015; .XXX ± 0.005
ANGULAR TOLERANCE: ± .5°
FINISH: 125
BREAK EDGES & SHARP CORNERS 0.005 MIN. TO 0.030 MAX

BROOKHAVEN NATIONAL LABORATORY
BROOKHAVEN NATIONAL LABORATORY
BROOKHAVEN SCIENCE ASSOCIATES
UPTON, NEW YORK 11973
Exploring Life's Mysteries, Protecting its Future
NSLS II NATIONAL SYNCHROTRON LIGHT SOURCE II

| | | |
|---|---|---|
| DRAWN BY | J TUOZZOLO | 3/13/2013 |
| CHECKED BY | C. AMARITO | 2/2014 |
| VACUUM APPROVAL | D.HSEUH | 2/2014 |
| ENGINEER APPROVAL | A. HUSSAIN | 2/2014 |
| SUPERVISOR APPROVAL | S.SHARMA | 2/2014 |
| ESH&H APPROVAL | A.ACKERMAN | 2/2014 |
| QA APPROVAL | J. HAWKES | 2/2014 |

STORAGE RING
FRONT END, MASK
FIXED MASK, ASSY, SIX BEAMLINE

NEXT ASSY: SR-FE-EPU02-1000
PROJECT: NSLS-II
THIRD ANGLE PROJECTION
SCALE: SEE DWG VIEW
WBS# 1.03.04.07.03
SIZE: E
DRAWING/PART NUMBER: SR-FE-MSK-3200
REVISION: A
ESH&Q RISK LEVEL: A1
SHEET 1 OF 1

C:\Mech-Eng\LT\SR\FE\MSK\SR-FE-MSK-3200.sldw

RELEASED + EFFECTIVE

| REVISION HISTORY | | | | | |
|---|---|---|---|---|---|
| REV | DESCRIPTION | DATE | DESIGNER | CHECKED BY | ENGINEER |
| A | REVISED PER ECO-001842 | 5/2013 | J TUOZZOLO | C.AMARITO | C.AMUNDSEN |

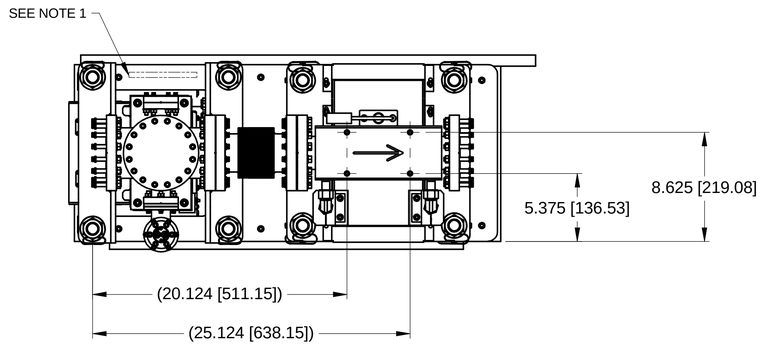


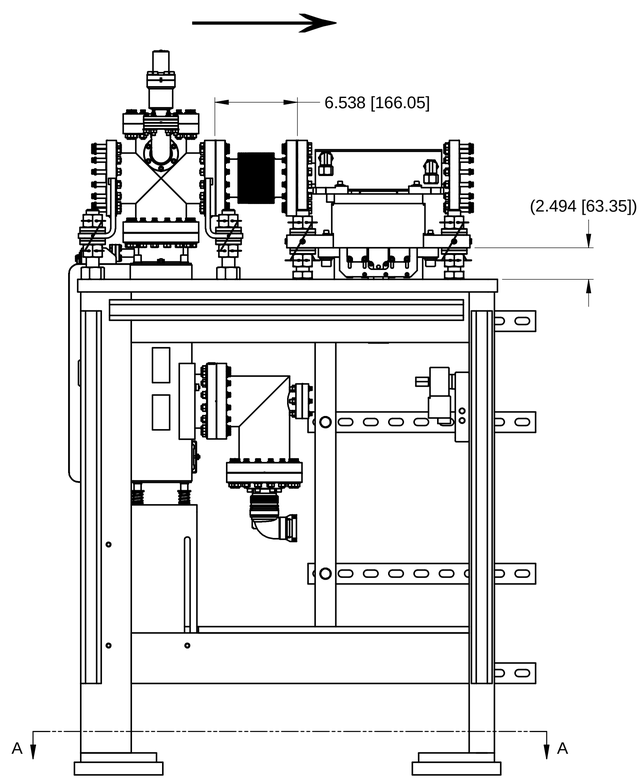


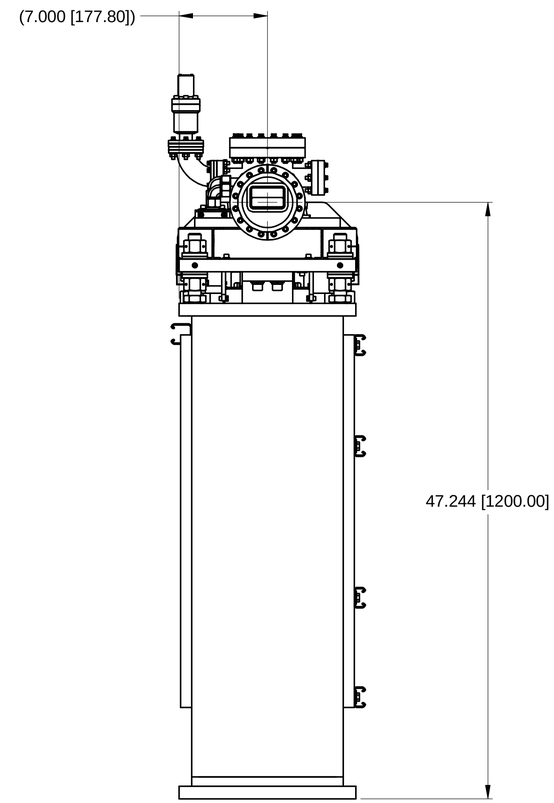


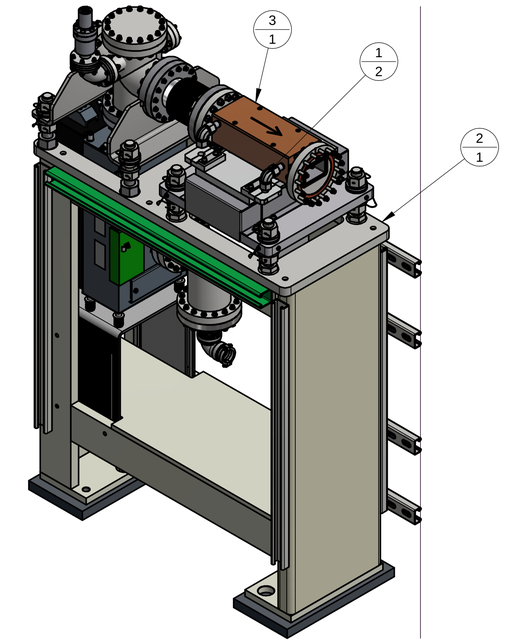


NOTES:

1. ITEM IDENTIFICATION: METAL STAMP, SCRIBE OR ELECTRO-ETCH PART NO AND APPLICABLE REV LTR USING .25 HIGH CHARACTERS IN APPROX LOCATION SHOWN.
2. RAISE PUMP SUPPORT TO ACCEPT FULL WEIGHT OF PUMP. CONFIRM A MINIMUM OF .25" ADDITIONAL SPRING TRAVEL.
3. ALL VACUUM COMPONENTS MUST BE CLEANED AND BAKED PRIOR TO ASSY PER. LT-ENG-RSI-SR-VA-002.
4. VACUUM TEST PRIOR TO INSTALLATION PER. LT-ENG-RSI-SR-VA-002.
5. INSTALL COVER PLATES W/ GASKETS (PI-FLG-0080).
6. AFTER FINAL ALIGNMENT, TORQUE SAFETY NUTS TO 300 FT-LB.
7. INSTALL SAFETY WIRE AFTER FINAL SURVEY.
8. USE NUT PLATES WHERE POSSIBLE (PI-NUT-0018), (PI-NUT-0020).
9. FIELD FIT AND VERIFY WATER LINES AFTER INSTALLATION.
10. FLANGE REQUIREMENTS: THE TIGHTENING PROCESS MUST BE DONE GRADUALLY IN 1/4 TO 1/2 TURN INCREMENTS IN AN ALTERNATING CRISS-CROSS PATTERN UNTIL 15 FT-LB IS ACHIEVED ON 5/16-24 AND 12 FT-LB ON 1/4-28 HARDWARE.

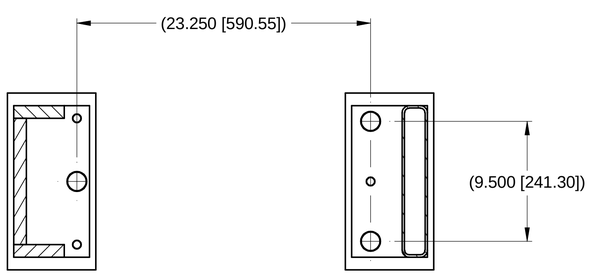


SECTION A-A
SCALE 1:6

| ITEM | QTY | PART NUMBER | DESCRIPTION | MATERIAL |
|---|---|---|---|---|
| 3 | 1 | SR-FE-PSH-3001 | PHOTON SHUTTER, WELDMENT, EPU | |
| 2 | 1 | SR-FE-PSH-1000 | PHOTON SHUTTER ASSEMBLY | |
| 1 | 2 | PI-FTNGS-0021 | ELBOW, COMP .62 X .62 | |

PARTS LIST

UNLESS OTHERWISE SPECIFIED
ALL DIMENSIONS ARE IN INCHES

DIMENSIONS IN BRACKETS [xx.xx] (WHERE PRESENT) ARE MILLIMETERS AND ARE FOR REFERENCE ONLY

INTERPRET DRAWING AS PER ANSI Y14.5-1994 OR Y32.2-1975

DIMENSIONAL TOLERANCES
X. ` 0.060
.X ` 0.030
.XX ` 0.015
.XXX ` 0.005

ANGULAR TOLERANCE
` .5~

FINISH
125

BREAK EDGES & SHARP CORNERS 0.005 MIN. TO 0.030 MAX

BROOKHAVEN NATIONAL LABORATORY
BROOKHAVEN NATIONAL LABORATORY
BROOKHAVEN SCIENCE ASSOCIATES
UPTON, NEW YORK 11973
*Exploring Life's Mysteries, Protecting its Future*

NSLS II NATIONAL SYNCHROTRON LIGHT SOURCE II

| | | |
|---|---|---|
| DRAWN BY | C.AMUNDSEN | 7/18/2013 |
| CHECKED BY | C.AMARITO | 11/2013 |
| VACUUM APPROVAL | D.HSEUH | 11/2013 |
| ENGINEER APPROVAL | C.AMUNDSEN | 11/2013 |
| SUPERVISOR APPROVAL | S.SHARMA | 11/2013 |
| ES&H APPROVAL | A.ACKERMAN | 11/2013 |
| QA APPROVAL | E.CHESWICK | 11/2013 |

STORAGE RING
FRONT END, PHOTON SHUTTER
PHOTON SHUTTER ASSEMBLY, EPU

D — SHEET SIZE
SR-FE-PSH-3000 — DRAWING/PART NUMBER
A — REVISION

NEXT ASSY: MULTIPLE
PROJECT: NSLS-II
THIRD ANGLE PROJECTION
SCALE: SEE DWG VIEW
WBS# 1.03.04.07.03
ESH&Q RISK LEVEL A2
SHEET 1 OF 1

C:\Mech-Eng\LT\SR\FE\PSH\SR-FE-PSH-3000.idw

RELEASED + EFFECTIVE

NOTES:

1. FINAL POSITION OF COMPONENTS TO BE LOCATED BY SURVEY GROUP.
2. CLEAN AND BAKE VACUUM CHAMBER COMPONENTS PRIOR TO INSTALLATION IN ACCORDANCE WITH BNL VACUUM SPEC (LT-ENG-RSI-SR-VA-002).
   USE COPPER GASKETS WHEN ASSEMBLING n 6.00 C.F. FLANGES.
   ASSEMBLE AND LEAK CHECK PER LT-ENG-RSI-SR-VA-002.
3. PROTECT KNIFE EDGES OF VACUUM COMPONENTS. INSTALL PLASTIC CAP OR BLANK ON OPEN FLANGES.
4. FLANGE REQUIREMENTS: THE TIGHTENING PROCESS MUST BE DONE GRADUALLY IN 1/4 TO 1/2 TURN INCREMENTS IN AN ALTERNATING CRISS CROSS PATTERN UNTIL 15 FT-LB FOR 5/16 HARDWARE OR 12 FT LB FOR 1/4 HARDWARE IS ACHIEVED.
5. BRICKS SHALL BE MATED TOGETHER (NO GAPS).
6. BRICKS MUST BE LAID OUT AS SHOWN TO PREVENT LINE OF SIGHT SHIELDING ISSUES.
7. REFER TO BRICK-COLOR REFERENCE TABLE: (NOTE: COLOR OF LEAD BRICKS ON THIS DRAWING IS USED AS A VISUAL AID FOR ASSEMBLY ONLY; MAY NOT REFLECT ACTUAL FINISH COLOR OF BRICKS.)
8. SEE DRAWING SR-FE-RCO-0500, FOR INSTALLATION OF UPSTREAM SHIELD COMPONENTS. MODIFY HEIGHT OF BRICKS AND BLOCK, TO CLEAR PENETRATION INTERFERENCE, IF NECESSARY.
9. MAINTAIN CLEARANCE BETWEEN LEAD BRICKS AND VACUUM COMPONENTS, DURING ASSEMBLY. USE STAINLESS STEEL SHIMS, AS REQUIRED.
10. DESIGNED IN ACCORDANCE WITH LT-C-ASD-RSI-SR-001, "PERFORMANCE REQUIREMENTS, ENGINEERING SPECIFICATIONS, AND INTERFACE CONTROL (RSI) FOR SUPPLEMENTAL SHIELDING DESIGN DOCUMENT (SSDS) FOR THE BST-P2 AND STORAGE RING" AND LT-EDP-013-026, "ENGINEERING DESIGN PLAN (EDP) FOR SUPPLEMENTAL SHIELDING FOR THE BST-P2 AND STORAGE RING".

REVISION HISTORY

| REV | DESCRIPTION | DATE | DESIGNER | CHECKED BY | ENGINEER |
|---|---|---|---|---|---|
| A | RELEASE PER ECO-001573 | 1/2014 | FAUSSETE | C AMARITO | A.HUSSAIN |
| B | REVISED PER ECO-002310 | 6/2014 | J.FABIJANIC | C AMARITO | C. AMUNDSEN |

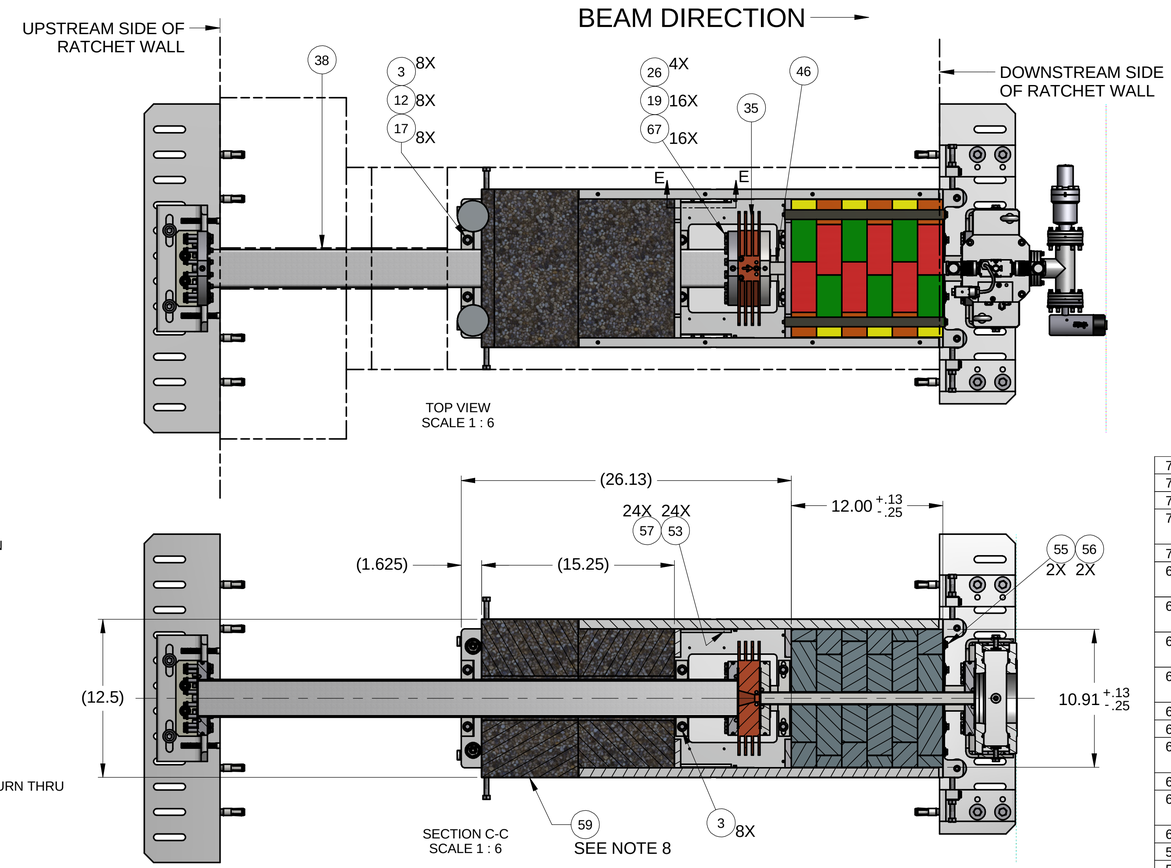


TOP VIEW
SCALE 1 : 6

SECTION C-C
SCALE 1 : 6

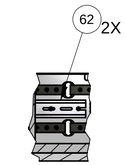


SECTION E-E
SCALE 1 : 6

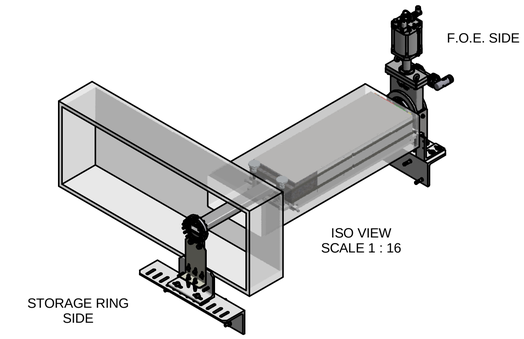


ISO VIEW
SCALE 1 : 16

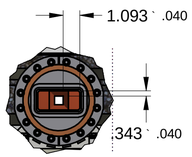


SECTION F-F
SCALE 1 : 5
DIMENSIONS FROM EDGE OF BURN THRU TO INSIDE OF TUBE

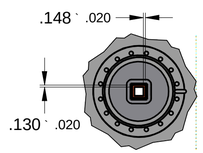


VIEW G-G
SCALE 1:5
DIMENSIONS FROM EDGE OF BURN THRU TO INSIDE OF TUBE

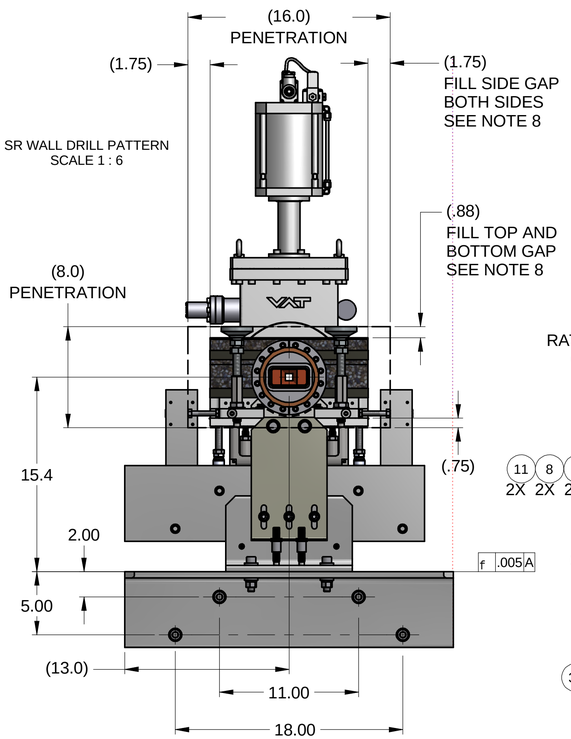


SR WALL DRILL PATTERN
SCALE 1 : 6

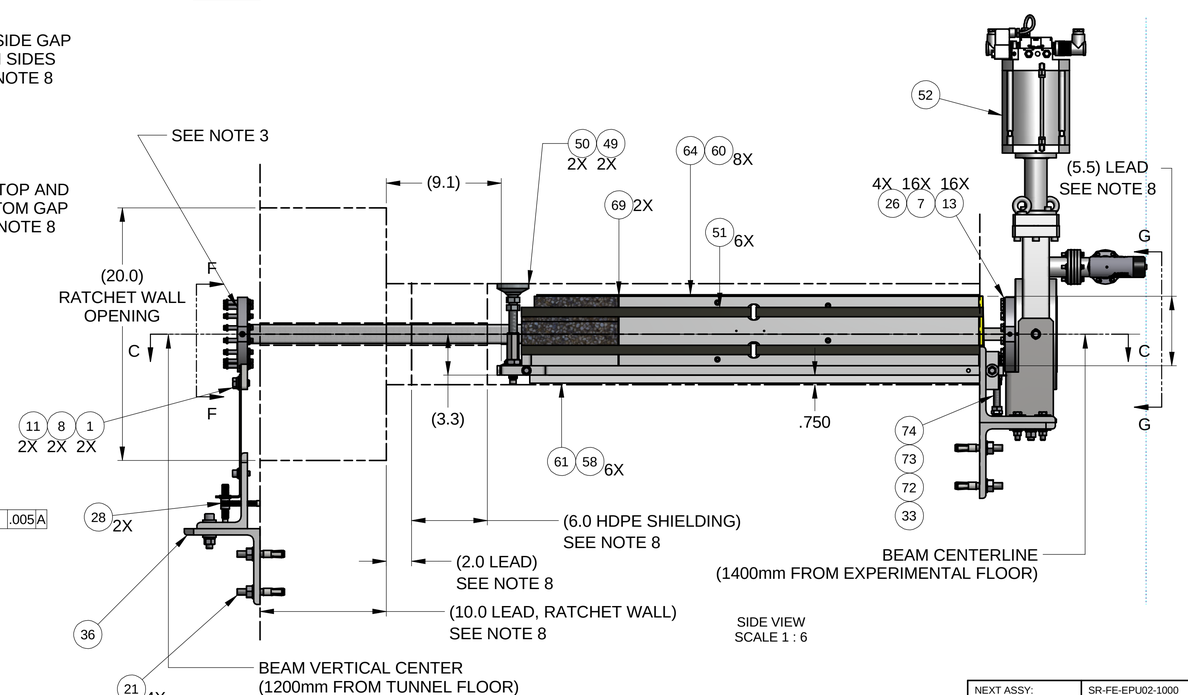


SIDE VIEW
SCALE 1 : 6

| ITEM | QTY | PART NUMBER | DESCRIPTION | MATERIAL |
|---|---|---|---|---|
| 74 | 2 | ANSI B18.3 - 1/2-13 UNC x 5 | Hexagon Socket Set Screw - Flat Point | Steel, Mild |
| 73 | 4 | ANSI B18.2.2 - 1/2 - 13 | Hex Nuts (Inch Series) Hex Jam Nut | Steel, Mild |
| 72 | 2 | PI-FEET-0005 | FEET, SWIVEL PAD, 1/2-13 | |
| 71 | 6 | SR-FE-RCO-3262 | LEAD, BLOCK | LEAD BRICK PER ASTM B29-03 (2009) GRADE L50049 |
| 70 | 8 | PI-NUT-0018 | PLATE NUT, 6.00 CF | STAINLESS STEEL |
| 69 | 2 | SR-FE-RCO-3475 | CHASSIS SHIM | ALUM SHEET, 6061-T6 PER ASTM B209 |
| 68 | 6 | SR-FE-RCO-3264 | LEAD, BLOCK | Lead Brick per ASTM B29-03 (2009) Grade L50049 |
| 67 | 16 | PI-SCR-0102 | SCREW, HEX HEAD CAP, 5/16"-24 X 3.00" LG, ST ST, SILVER PL | Stainless Steel, Silver Pl |
| 66 | 6 | SR-FE-RCO-3276 | LEAD, BLOCK | Lead Brick per ASTM B29-03 (2009) Grade L50049 |
| 65 | 1 | SR-FE-RCO-1170 | RATCHET WALL COLLIMATOR CHASSIS | |
| 64 | 1 | SR-FE-RCO-1097 | TOP PLATE | STAINLESS STEEL |
| 63 | 6 | SR-FE-RCO-3269 | LEAD, BLOCK | Lead Brick per ASTM B29-03 (2009) Grade L50049 |
| 62 | 2 | 3270_cut-to-4.00 | DIN RAIL CUT TO 4.00 | Aluminum |
| 61 | 1 | SR-FE-RCO-1096-06 | BASE PLATE SUPPORT .625 THK | HIGH DENSITY POLYETHYLENE SHEET |
| 60 | 8 | ANSI B18.3 - 8-32 UNC x 0.875 | Hexagon Socket Flat Countersunk Head Cap Screw | Steel, Zinc Plated |
| 59 | 1 | SR-FE-RCO-1070 | RATCHET CONCRETE BLOCK | |
| 58 | 6 | ANSI B18.3 - 1/4-20 UNC x 1 | Hexagon Socket Flat Countersunk Head Cap Screw | Steel, Mild, Zinc Pl |
| 57 | 24 | ANSI B18.22.1 - No. 6 - narrow | Plain Washer (Inch )Type A and B | Steel, Mild, Zinc Pl |
| 56 | 2 | ANSI B18.22.1 - 1/4 - narrow | Plain Washer (Inch )Type A and B | Steel, Mild, Zinc Pl |
| 55 | 2 | ANSI B18.2.1 - 1/4-20 UNC - 0.5 | Hex Cap Screw | Steel, Mild, Zinc Pl |
| 54 | 16 | IFI 115 - 5/16 - 24 - 2 | Flange 12-Point Screw | Stainless Steel, Silver Pl |
| 53 | 24 | ANSI B18.3 - No. 6 - 32 UNC - 3/8 HS HCS | Hexagon Socket Head Cap Screw | Steel, Mild, Zinc Pl |
| 52 | 1 | SR-FE-RCO-1080 | F.O.E. GATE VALVE ASSEMBLY | |
| 51 | 6 | PI-STRP-0001 | STRAP | Steel |
| 50 | 2 | PI-STD-0007 | SWIVEL LEVELING MOUNT, 3/4-10 x 4" | Steel, Zinc Plated |
| 49 | 2 | PI-NUT-0049 | COUPLING NUT | Steel, Alloy |
| 46 | 1 | SR-FE-RCO-3255 | DOWNSTREAM RCO VACUUM TUBE, WELDMENT, SIX | Welded Stainless Steel |
| 38 | 1 | SR-FE-RCO-1181 | UPSTREAM VACUUM TUBE, WELDMENT | Welded Stainless Steel |
| 36 | 1 | SR-FE-RCO-1106 | SUPPORT, RATCHET WALL, ASSY | |
| 35 | 1 | SR-FE-ABS-3260 | BURN THRU DEVICE, RCO, SIX (MODIFIED) | |
| 33 | 2 | PI-WSHR-0072 | WASHER, 1.5" OD X .53" ID | Steel, Zinc Plated |
| 28 | 2 | PI-SCR-0077 | SET SCREW, SWIVEL PAD, 3/8-16x3 LONG | Steel, Mild, Zinc Pl |
| 26 | 4 | PI-GSKT-0006 | GASKET, COPPER, 4.01 ID (6.00 CF) | COPPER, OFHC |
| 21 | 4 | PI-AHR-0004 | ANCHOR, BOLT | Stainless Steel |
| 19 | 32 | ANSI B18.22.1 - 5/16 - narrow | Plain Washer (Inch )Type A and B | Steel, Mild, Zinc Pl |
| 17 | 8 | ASME B18.21.1 - 1/4 | Regular Helical Spring Lock Washers(Inch Series) | Steel, Mild, Zinc Pl |
| 13 | 16 | ANSI B18.22M - 8 N | Metric Plain Washers | Stainless Steel |
| 12 | 8 | ANSI B18.22.1 - 1/4 - Regular | Plain Washer (Inch ) | Steel, Mild, Zinc Pl |
| 11 | 2 | ANSI B18.22.1 - 1/2 - narrow | Plain Washer (Inch ) | Steel, Mild, Zinc Pl |
| 8 | 2 | ANSI B18.21.1 - 0.5 | Helical Spring Lock Washers | Steel, Mild, Zinc Pl |
| 7 | 16 | ANSI B18.2.3.1M - M8 x 1.25 x 35 | Metric Hex Cap Screw | Stainless Steel |
| 3 | 8 | ANSI B18.2.1 - 1/4-20 UNC - 0.75 | Hex Cap Screw | Steel, Mild, Zinc Pl |
| 1 | 2 | ANSI B18.2.1 - 1/2-13 UNC - 1 | Hex Cap Screw | Steel, Mild, Zinc Pl |

PARTS LIST

UNLESS OTHERWISE SPECIFIED
ALL DIMENSIONS ARE IN INCHES
DIMENSIONS IN BRACKETS [xx.xx] (WHERE PRESENT) ARE MILLIMETERS AND ARE FOR REFERENCE ONLY
INTERPRET DRAWING AS PER ASME Y14.5-1994 OR Y32.2-1975

DIMENSIONAL TOLERANCES: X. ` 0.060; .X ` 0.030; .XX ` 0.015; .XXX ` 0.005
ANGULAR TOLERANCE: ` .5~
FINISH: 125
BREAK EDGES & SHARP CORNERS 0.005 MIN. TO 0.030 MAX

BROOKHAVEN NATIONAL LABORATORY
BROOKHAVEN NATIONAL LABORATORY
BROOKHAVEN SCIENCE ASSOCIATES
UPTON, NEW YORK 11973
Exploring Life's Mysteries, Protecting its Future

NSLS II NATIONAL SYNCHROTRON LIGHT SOURCE II

| | | |
|---|---|---|
| DRAWN BY | G. DACOS | 4/11/2014 |
| CHECKED BY | C AMARITO | 12/2013 |
| VACUUM APPROVAL | H HSEUH | 12/2013 |
| ENGINEER APPROVAL | G DACOS | 12/2013 |
| SUPERVISOR APPROVAL | S SHARMA | 12/2013 |
| ES&H APPROVAL | A ACKERMAN | 12/2013 |
| QA APPROVAL | J HAWKES | 12/2013 |

STORAGE RING
FRONT END, RCO
RATCHET WALL COLLIMATOR

D — SHEET SIZE
SR-FE-RCO-3210 — DRAWING/PART NUMBER
B — REVISION

NEXT ASSY: SR-FE-EPU02-1000
PROJECT: NSLS-II
THIRD ANGLE PROJECTION
SCALE: SEE DWG VIEW
WBS# 1.03.04.07.03
ESH&Q RISK LEVEL A-1
SHEET 1 OF 2

C:\mech-eng\LT\SR\FE\RCO\SR-FE-RCO-3210.dw

RELEASED + EFFECTIVE

NOTE: COLOR OF LEAD BRICKS ON THIS DRAWING IS USED AS A VISUAL AID FOR ASSEMBLY ONLY; MAY NOT REFLECT ACTUAL FINISH COLOR OF BRICKS.

| BRICK COLOR REFERENCE | | |
|---|---|---|
| PART NO. | REF. COLOR | DIMENSIONS |
| SR-FE-RCO-3264 | GREEN | 2.00" X 4.00" X 5.50" |
| SR-FE-RCO-3262 | RED | 2.00" X 4.00" X 5.50" |
| SR-FE-RCO-3269 | YELLOW | .94" X 2.00" X 5.50" |
| SR-FE-RCO-3276 | ORANGE | 1.98" x 2.00" X 5.50" |

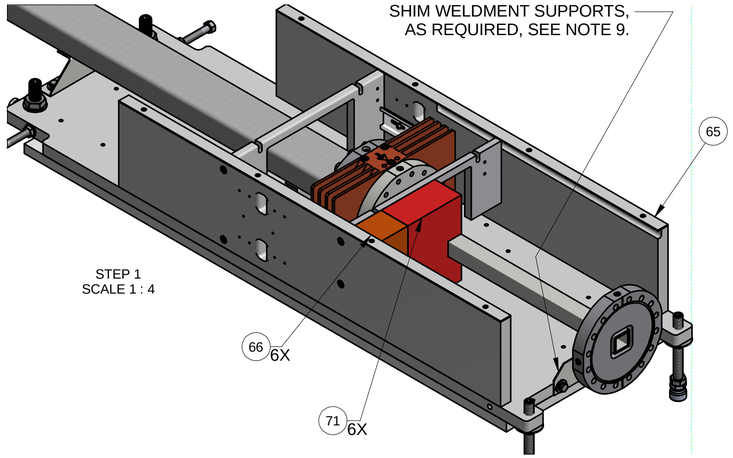


STEP 1
SCALE 1 : 4

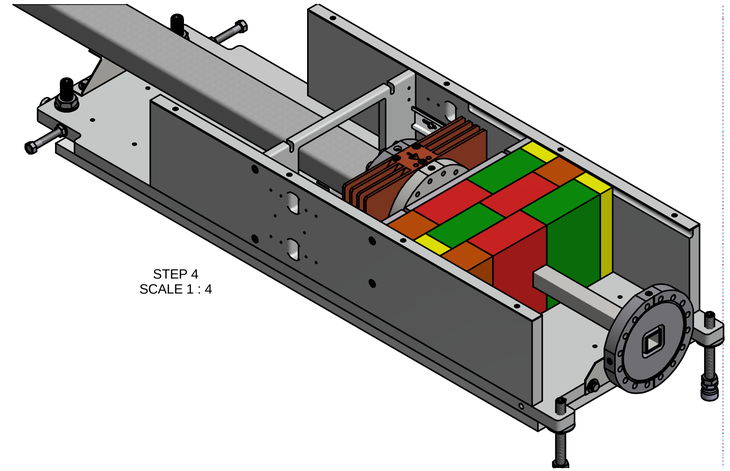

STEP 4
SCALE 1 : 4

FINISHED BRICK ASSEMBLY
SCALE 1 : 4

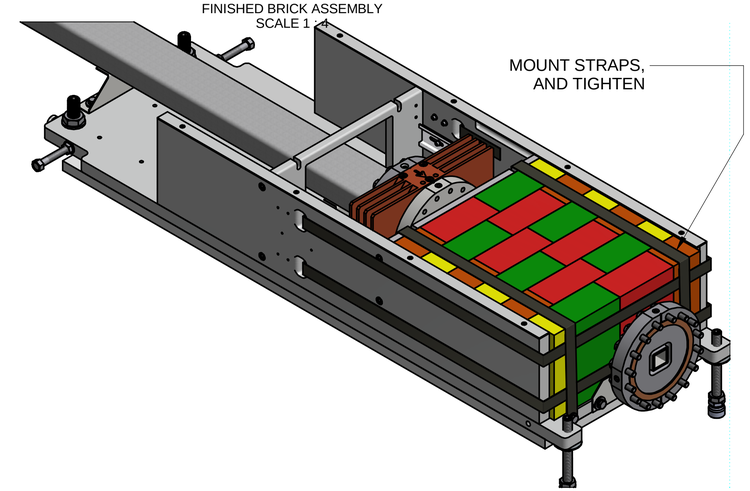


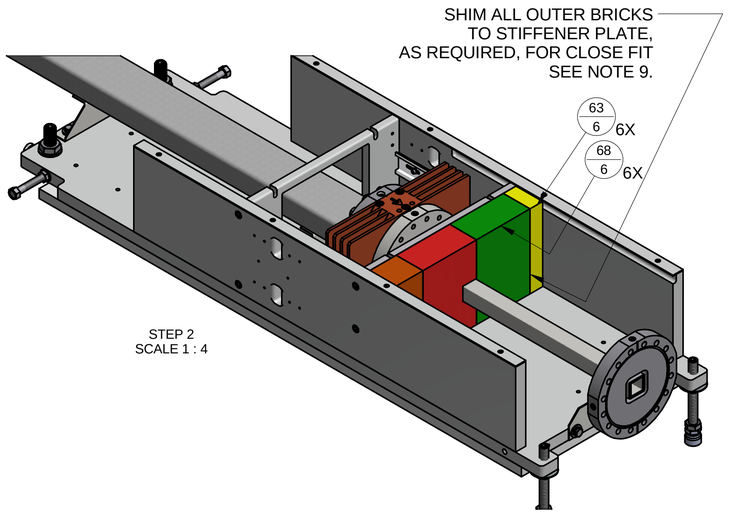


STEP 2
SCALE 1 : 4

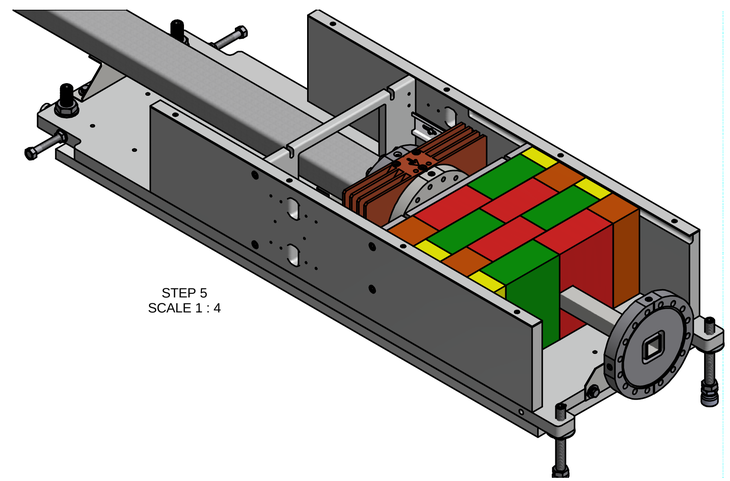

STEP 5
SCALE 1 : 4

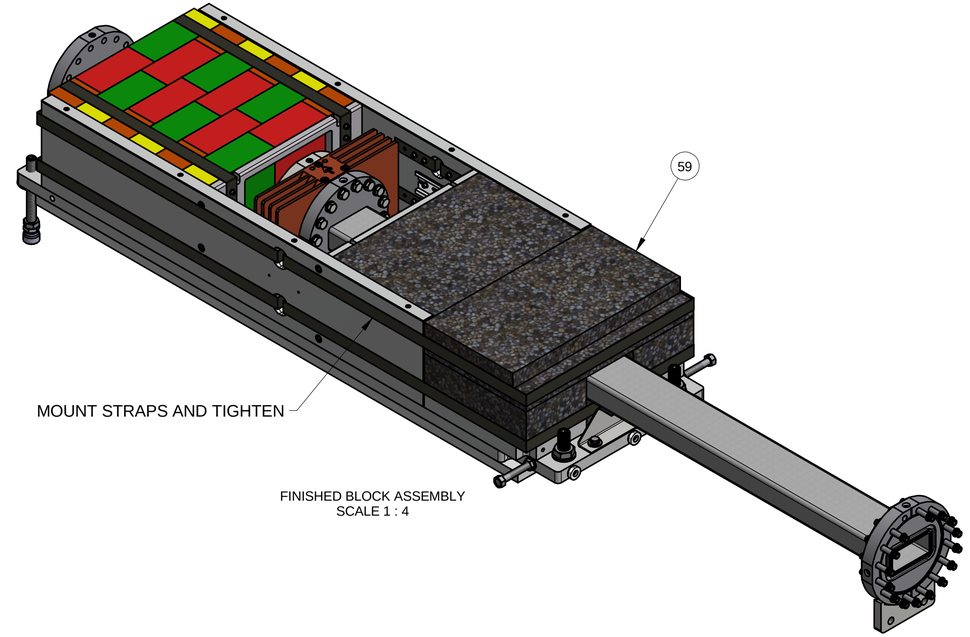


FINISHED BLOCK ASSEMBLY
SCALE 1 : 4

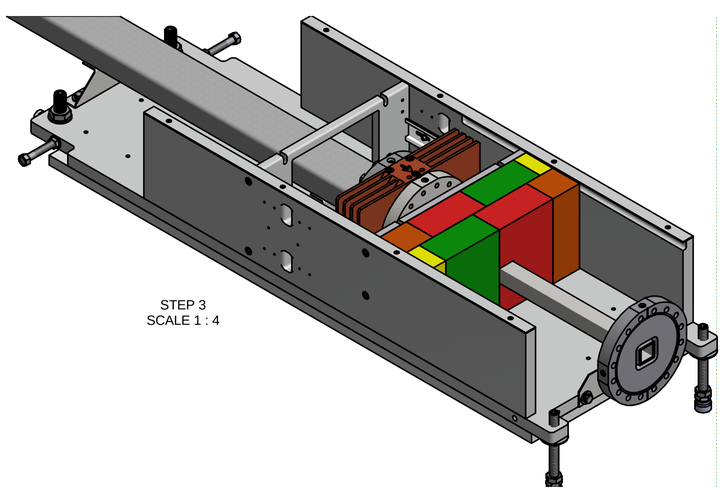

STEP 3
SCALE 1 : 4

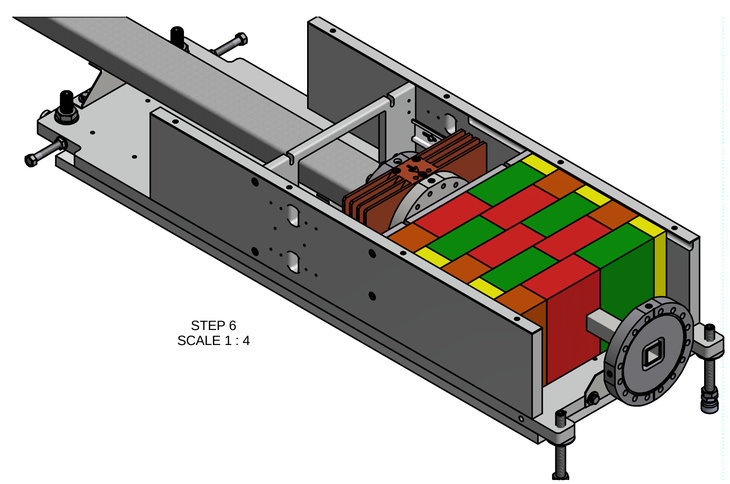

STEP 6
SCALE 1 : 4

| D | SR-FE-RCO-3210 | B |
|---|---|---|
| SHEET SIZE | DRAWING/PART NUMBER | REVISION |
| ESH&Q RISK LEVEL A-1 | | SHEET 2 OF 2 |

C:\mech-eng\LTSR\FE\RCO\SR-FE-RCO-3210.dfw

RELEASED + EFFECTIVE

| REVISION HISTORY | | | | | |
|---|---|---|---|---|---|
| REV | DESCRIPTION | DATE | DESIGNER | CHECKED BY | ENGINEER |
| A | RELEASE PER ECO-001790 | 11/2013 | J TUOZZOLO | J FABIJANIC | C.AMUNDSEN |
| B | REVISED PER ECO-002428 | 7/2014 | J TUOZZOLO | C AMARITO | C.AMUNDSEN |
| C | REVISED PER ECO-003183 | 5/2015 | FAUSSETE | AMARITO | HUSSAIN |

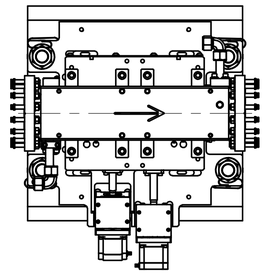

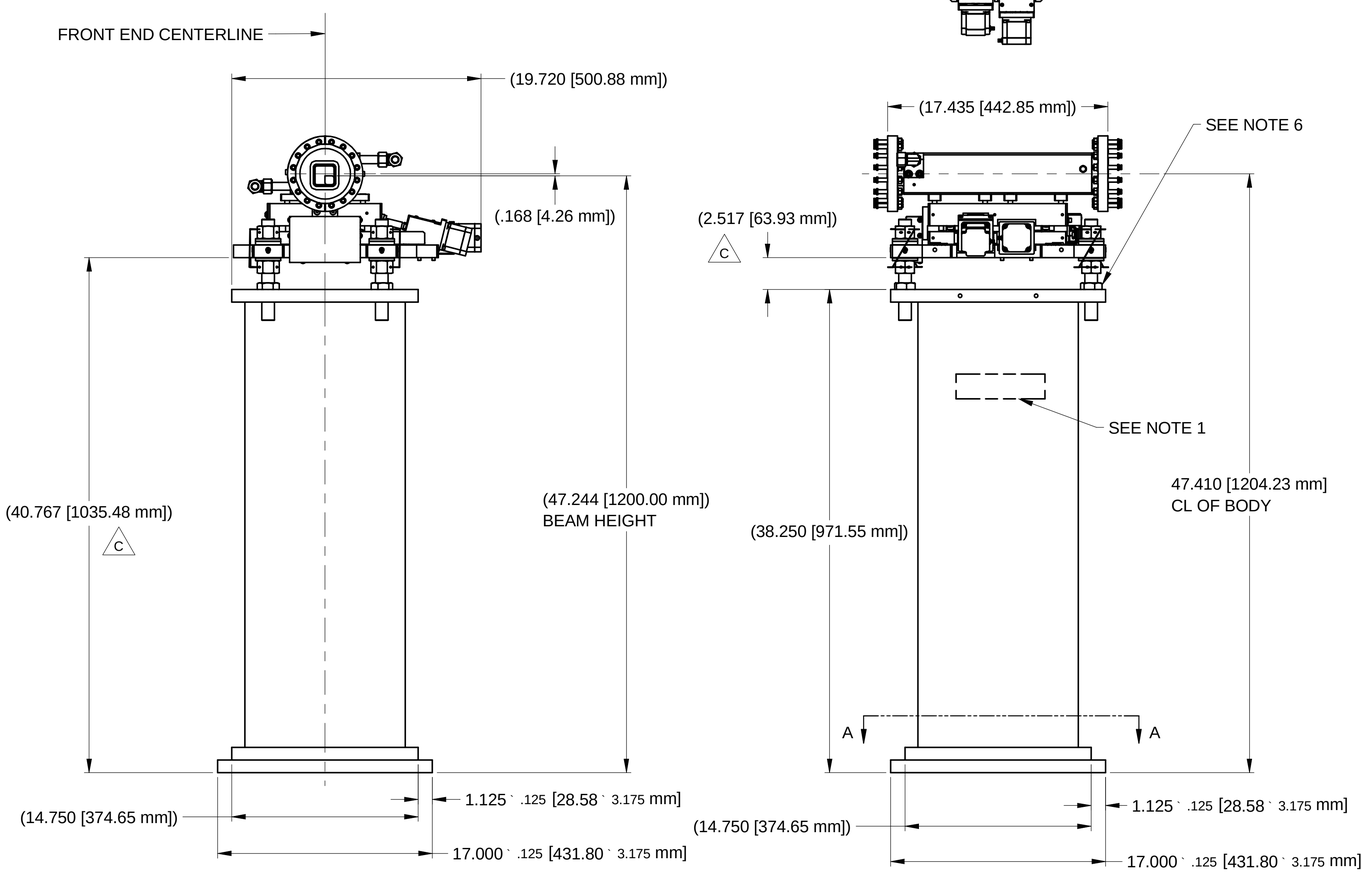


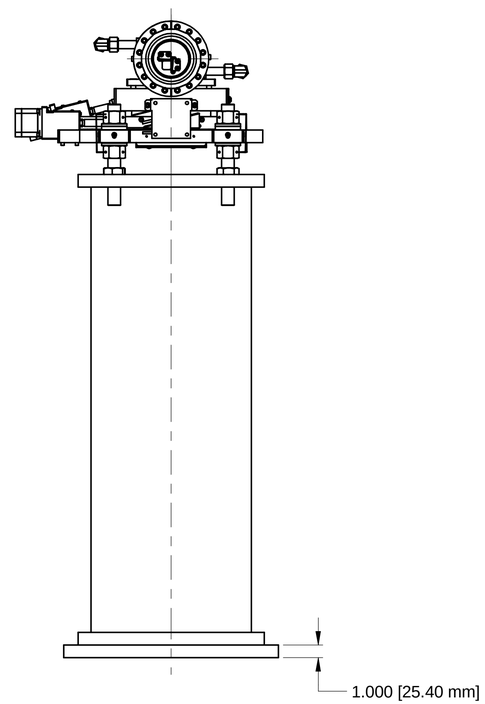


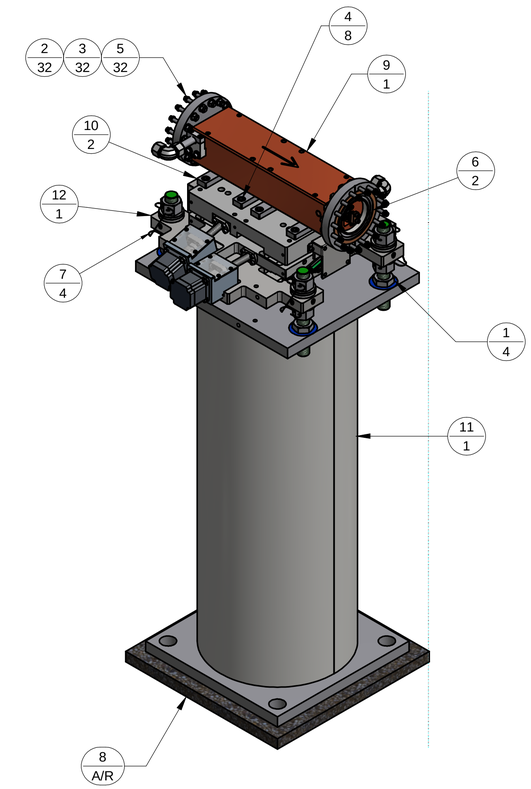


NOTES:

1. ITEM IDENTIFICATION: METAL STAMP, SCRIBE OR ELECTRO-ETCH PART NO AND APPLICABLE REV LTR USING .25 HIGH CHARACTERS.
2. USE ITEM 6 (COPPER GASKET) WHEN ASSEMBLING Ø 6.00 C.F. FLANGES.
3. INSTALL ITEM 7 (SAFETY WIRES) AFTER FINAL ALIGNMENT.
4. ALL VACUUM COMPONENTS MUST BE CLEANED, BAKED AND PACKAGED PER LT-ENG-RSI-SR-VA-002 PRIOR TO INSTALLATION.
5. INSTALL COVER PLATES W/ GASKETS (PI-FLG-0080).
6. AFTER FINAL ALIGNMENT, TORQUE 1-12 NUTS TO 300 FT-LB.
7. FLANGE REQUIREMENTS: THE TIGHTENING PROCESS MUST BE DONE GRADUALLY IN 1/4 TO 1/2 TURN INCREMENTS IN AN ALTERNATING CRISS-CROSS PATTERN UNTIL 15 FT-LB IS ACHIEVED ON 5/16-24 HARDWARE.
8. USE NUT PLATES WHERE POSSIBLE (PI-NUT-0018).
9. FIELD FIT WATER LINES AFTER INSTALLATION.

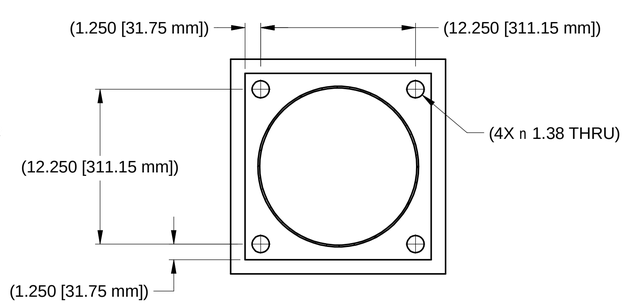


SECTION A-A
SCALE 1 : 6

| ITEM | QTY | PART NUMBER | DESCRIPTION | MATERIAL |
|---|---|---|---|---|
| 12 | 1 | SR-FE-STG-1300 | STAGE, X-Y | |
| 11 | 1 | SR-FE-SP-1422 | STAND ASSEMBLY | |
| 10 | 2 | SR-FE-SLT-1421 | PLATE, MOUNTING | Stainless Steel, 304 per ASTM A479 |
| 9 | 1 | SR-FE-SLT-1401 | SLIT, ASSEMBLY | |
| 8 | A/R | SR-FE-SLT-1300-01 | GROUT | SEE SR-PI-GRT-0001 |
| 7 | 4 | PI-WIRE-0002 | SAFETY WIRE, 2.75" | 304 SST |
| 6 | 2 | PI-GSKT-0006 | GASKET, COPPER, 4.01 ID (6.00 CF) | COPPER, OFHC |
| 5 | 32 | IFI 115 - 5/16 - 24 - 2 | Flange 12-Point Screw | 300 Series SST, Silver Pl |
| 4 | 8 | ANSI B18.3 - 3/8 - 16 UNC - 3/4 HS HCS | Hexagon Socket Head Cap Screw | Mild Steel, Zinc Pl |
| 3 | 32 | ANSI B18.22.1 - 5/16 - narrow - Type B | Plain Washer (Inch )Type A and B | 300 Series SST, Silver Pl |
| 2 | 32 | ANSI B18.2.2 - 5/16 - 24 | Hex Nuts (Inch Series) Hex Nut | 300 Series SST, Silver Pl |
| 1 | 4 | ANSI B18.2.2 - 1 - 12 | Hex Nuts (Inch Series) Hex Jam Nut | Mild Steel, Zinc Pl |

PARTS LIST

UNLESS OTHERWISE SPECIFIED
ALL DIMENSIONS ARE IN INCHES
DIMENSIONS IN BRACKETS [xx.xx] (WHERE PRESENT) ARE MILLIMETERS AND ARE FOR REFERENCE ONLY
INTERPRET DRAWING AS PER ASME Y14.5-1994 OR Y32.2-1975

DIMENSIONAL TOLERANCES: X. ` 0.060; .X ` 0.030; .XX ` 0.015; .XXX ` 0.005
ANGULAR TOLERANCE: ` .5~
FINISH: 125
BREAK EDGES & SHARP CORNERS 0.005 MIN. TO 0.030 MAX

BROOKHAVEN NATIONAL LABORATORY
BROOKHAVEN NATIONAL LABORATORY
BROOKHAVEN SCIENCE ASSOCIATES
UPTON, NEW YORK 11973
Exploring Life's Mysteries, Protecting its Future

NSLSII NATIONAL SYNCHROTRON LIGHT SOURCE II

| | | |
|---|---|---|
| DRAWN BY | J TUOZZOLO | 10/24/2013 |
| CHECKED BY | J FABIJANIC | 11/2013 |
| VACUUM APPROVAL | H HSEUH | 11/2013 |
| ENGINEER APPROVAL | C.AMUNDSEN | 11/2013 |
| SUPERVISOR APPROVAL | S SHARMA | 11/2013 |
| ES&H APPROVAL | A ACKERMAN | 11/2013 |
| QA APPROVAL | J HAWKES | 11/2013 |

STORAGE RING
FRONT ENDS, SLIT
SLIT,ASSEMBLY

SHEET SIZE: D
SR-FE-SLT-1400 (DRAWING/PART NUMBER)
REVISION: C

NEXT ASSY: SR-FE-EPU21-1000
PROJECT: NSLS-II
THIRD ANGLE PROJECTION
SCALE: SEE DWG VIEW
WBS# 1.03.04.07.03
ESH&Q RISK LEVEL A-2
SHEET 1 OF 1

C:\Mech-Eng\LT\SR\FE\SLT\SR-FE-SL-T-1400.idw

RELEASED + EFFECTIVE

| REVISION HISTORY | | | | | |
|---|---|---|---|---|---|
| REV | DESCRIPTION | DATE | DESIGNER | CHECKED BY | ENGINEER |
| A | RELEASE PER ECO 001790 | 11/2013 | J TUOZZOLO | J FABIJANIC | C.AMUNDSEN |
| B | REVISED PER ECO-002428 | 7/2014 | J TUOZZOLO | C AMARITO | C.AMUNDSEN |
| C | REVISED PER ECO-003183 | 5/2015 | FAUSSETE | AMARITO | HUSSAIN |

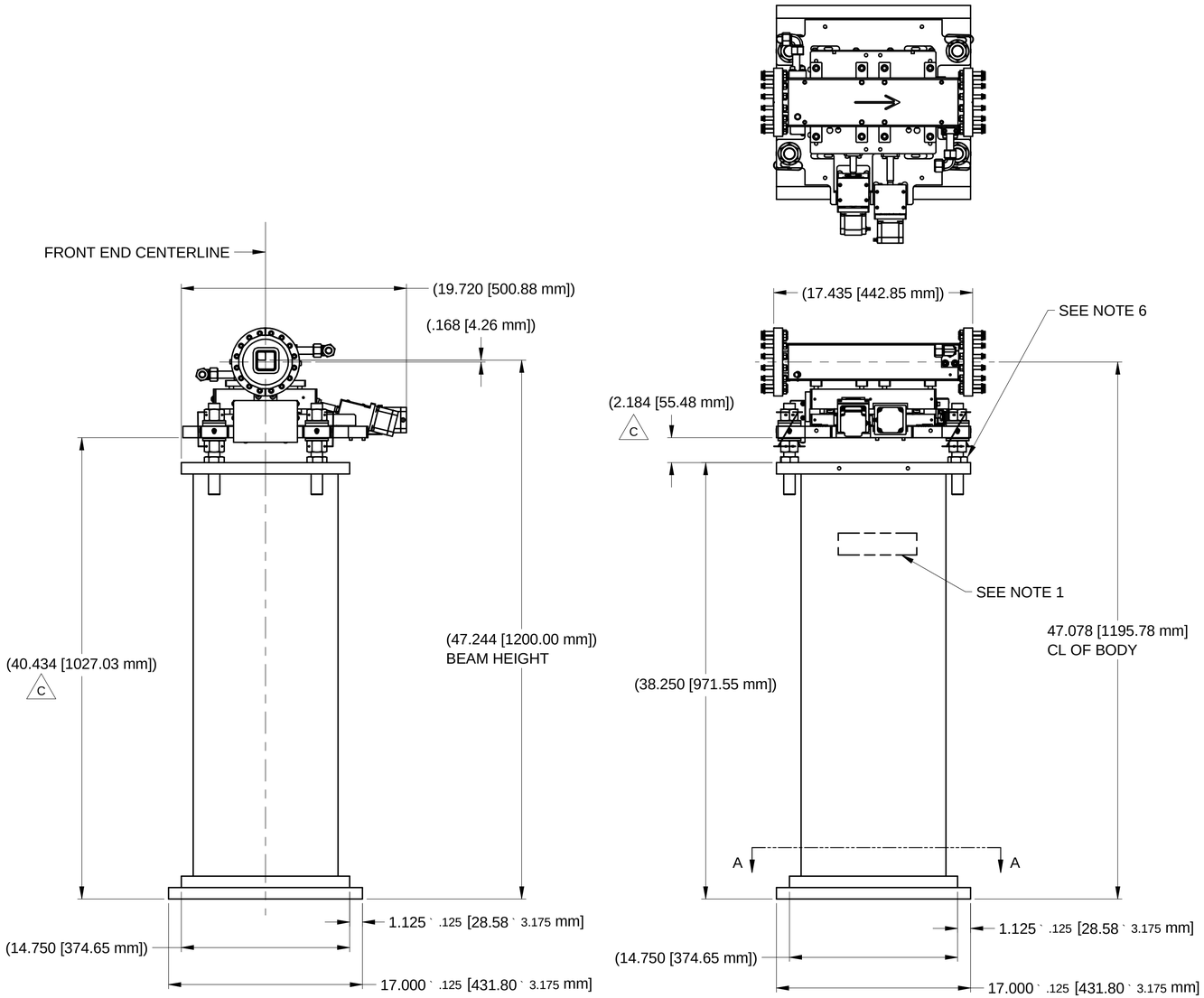


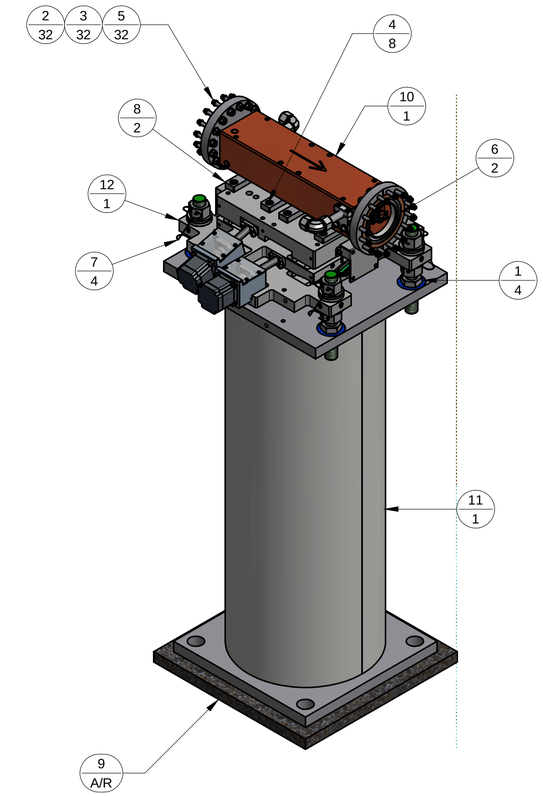


NOTES:

1. ITEM IDENTIFICATION: METAL STAMP, SCRIBE OR ELECTRO-ETCH PART NO AND APPLICABLE REV LTR USING .25 HIGH CHARACTERS.
2. USE ITEM 6 (COPPER GASKET) WHEN ASSEMBLING Ø 6.00 C.F. FLANGES.
3. INSTALL ITEM 7 (SAFETY WIRES) AFTER FINAL ALIGNMENT.
4. ALL VACUUM COMPONENTS MUST BE CLEANED, BAKED AND PACKAGED PER LT-ENG-RSI-SR-VA-002 PRIOR TO INSTALLATION.
5. INSTALL COVER PLATES W/ GASKETS (PI-FLG-0080).
6. AFTER FINAL ALIGNMENT, TORQUE 1-12 NUTS TO 300 FT-LB.
7. FLANGE REQUIREMENTS: THE TIGHTENING PROCESS MUST BE DONE GRADUALLY IN 1/4 TO 1/2 TURN INCREMENTS IN AN ALTERNATING CRISS-CROSS PATTERN UNTIL 15 FT-LB IS ACHIEVED ON 5/16-24 HARDWARE.
8. USE NUT PLATES WHERE POSSIBLE (PI-NUT-0018).
9. FIELD FIT WATER LINES AFTER INSTALLATION.

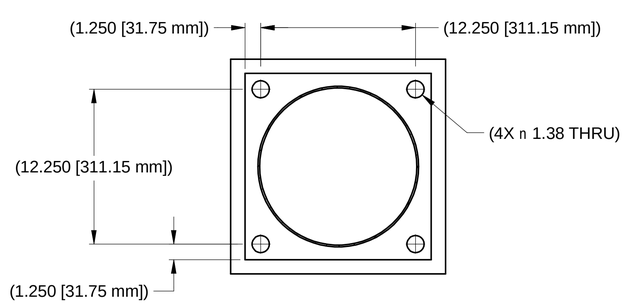


SECTION A-A
SCALE 1 : 6

| ITEM | QTY | PART NUMBER | DESCRIPTION | MATERIAL |
|---|---|---|---|---|
| 12 | 1 | SR-FE-STG-1300 | STAGE, X-Y | |
| 11 | 1 | SR-FE-SP-1422 | STAND ASSEMBLY | |
| 10 | 1 | SR-FE-SLT-1451 | SLIT BODY ASSEMBLY | |
| 9 | A/R | SR-FE-SLT-1350-01 | GROUT | SEE SR-PI-GRT-0001 |
| 8 | 2 | SR-FE-SLT-1421 | PLATE, MOUNTING | Stainless Steel, 304 per ASTM A479 |
| 7 | 4 | PI-WIRE-0002 | SAFETY WIRE, 2.75" | 304 SST |
| 6 | 2 | PI-GSKT-0006 | GASKET, COPPER, 4.01 ID (6.00 CF) | COPPER, OFHC |
| 5 | 32 | IFI 115 - 5/16 - 24 - 2 | Flange 12-Point Screw | 300 Series SST, Silver Pl |
| 4 | 8 | ANSI B18.3 - 3/8 - 16 UNC - 3/4 HS HCS | Hexagon Socket Head Cap Screw | Mild Steel, Zinc Pl |
| 3 | 32 | ANSI B18.22.1 - 5/16 - narrow - Type B | Plain Washer (Inch )Type A and B | 300 Series SST, Silver Pl |
| 2 | 32 | ANSI B18.2.2 - 5/16 - 24 | Hex Nuts (Inch Series) Hex Nut | 300 Series SST, Silver Pl |
| 1 | 4 | ANSI B18.2.2 - 1 - 12 | Hex Nuts (Inch Series) Hex Jam Nut | Mild Steel, Zinc Pl |

PARTS LIST

UNLESS OTHERWISE SPECIFIED
ALL DIMENSIONS ARE IN INCHES
DIMENSIONS IN BRACKETS [xx.xx] (WHERE PRESENT) ARE MILLIMETERS AND ARE FOR REFERENCE ONLY
INTERPRET DRAWING AS PER ASME Y14.5-1994 OR Y32.2-1975

DIMENSIONAL TOLERANCES: X. ` 0.060; .X ` 0.030; .XX ` 0.015; .XXX ` 0.005
ANGULAR TOLERANCE: ` .5~
FINISH: 125
BREAK EDGES & SHARP CORNERS 0.005 MIN. TO 0.030 MAX

BROOKHAVEN NATIONAL LABORATORY
BROOKHAVEN NATIONAL LABORATORY
BROOKHAVEN SCIENCE ASSOCIATES
UPTON, NEW YORK 11973
Exploring Life's Mysteries, Protecting its Future

NSLSII NATIONAL SYNCHROTRON LIGHT SOURCE II

| | | |
|---|---|---|
| DRAWN BY | J TUOZZOLO | 10/25/2013 |
| CHECKED BY | J FABIJANIC | 10/2013 |
| VACUUM APPROVAL | H HSEUH | 10/2013 |
| ENGINEER APPROVAL | C.AMUNDSEN | 10/2013 |
| SUPERVISOR APPROVAL | S SHARMA | 10/2013 |
| ES&H APPROVAL | A ACKERMAN | 10/2013 |
| QA APPROVAL | J HAWKES | 10/2013 |

STORAGE RING
FRONT ENDS, SLIT
SLIT,ASSEMBLY

SHEET SIZE: D
DRAWING/PART NUMBER: SR-FE-SLT-1450
REVISION: C

NEXT ASSY: SR-FE-EPU21-1000
PROJECT: NSLS-II
THIRD ANGLE PROJECTION
SCALE: SEE DWG VIEW
WBS# 1.03.04.07.03
ESH&Q RISK LEVEL: A-2
SHEET 1 OF 1

C:\Mech-Eng\LT\SR\FE\SLT\SR-FE-SLT-1450.idw

RELEASED + EFFECTIVE

NOTES:

1. ITEM IDENTIFICATION: METAL STAMP, SCRIBE OR ELECTRO-ETCH PART NO AND APPLICABLE REV LTR USING .25 HIGH CHARACTERS.
2. USE ITEM 30 (COPPER GASKET) WHEN ASSEMBLING Ø 6.00 C.F. FLANGES (12 PLC'S).
3. USE ITEM 29 (COPPER GASKET) WHEN ASSEMBLING n 2.75 C.F. FLANGES (8 PLC'S).
4. INSTALL SAFETY WIRES AFTER FINAL ALIGNMENT.
5. ALL VACUUM COMPONENTS MUST BE CLEANED, BAKED AND BAGGED PER LT-ENG-RSI-SR-VA-002 PRIOR TO INSTALLATION.
6. INSTALL COVERPLATES W/ GASKETS (PI-FLG-0080).
7. RAISE PUMP SUPPORT TO ACCEPT FULL WEIGHT OF PUMP. CONFIRM A MINIMUM OF .25" ADDITIONAL SPRING TRAVEL.
8. AFTER FINAL ALIGNMENT, TORQUE NUTS TO 300 FT-LB.
9. FLANGE REQUIREMENTS: THE TIGHTENING PROCESS MUST BE DONE GRADUALLY IN 1/4 TO 1/2 TURN INCREMENTS IN AN ALTERNATING CRISS-CROSS PATTERN UNTIL 15 FT-LB IS ACHIEVED ON 5/16-24 AND 12 FT-LB ON 1/4-28 HARDWARE.
10. USE NUT PLATES WHERE POSSIBLE (PI-NUT-0018, PI-NUT-0020)

REVISION HISTORY

| REV | DESCRIPTION | DATE | DESIGNER | CHECKED BY | ENGINEER |
|---|---|---|---|---|---|
| A | RELEASE PER ECO-001720 | 10/2013 | J TUOZZOLO | C AMARITO | C.AMUNDSEN |
| B | REVISED PER ECO-001819 | 11/2013 | J TUOZZOLO | C AMARITO | C.AMUNDSEN |
| C | REVISED PER ECO-001976 | 1/2014 | D. PULEO | C AMARITO | G. DACOS |
| D | REVISED PER ECO-002918 | 3/2015 | FAUSSETE | AMARITO | C.AMUNDSEN |

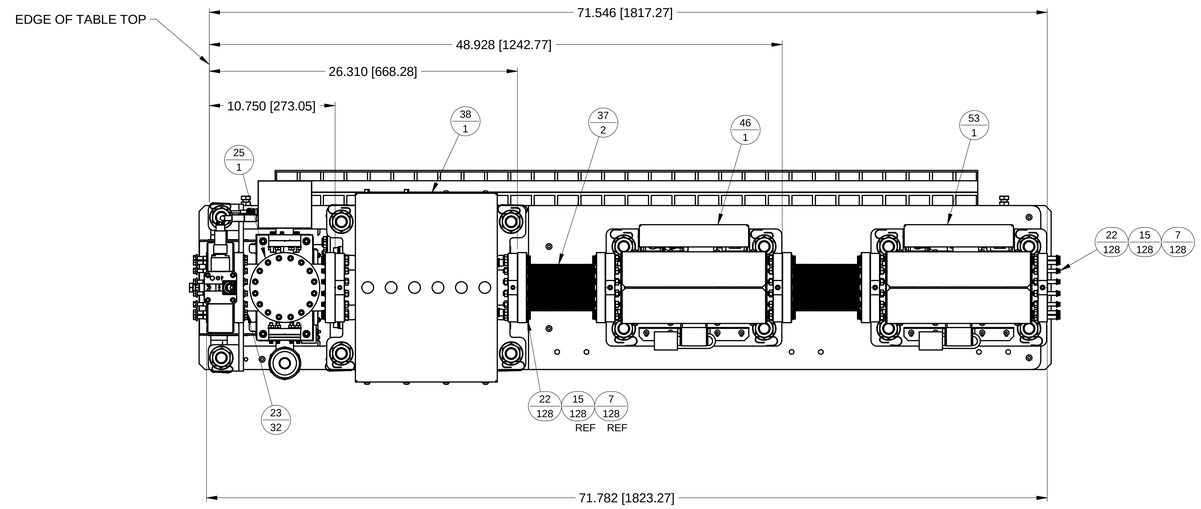


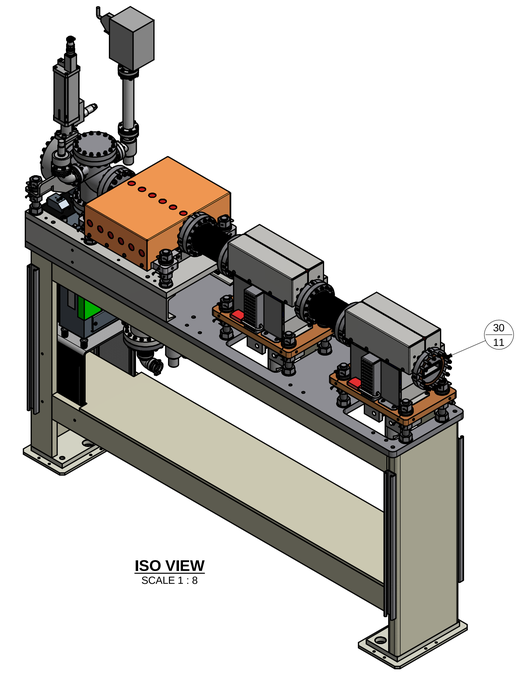

**ISO VIEW**
SCALE 1 : 8

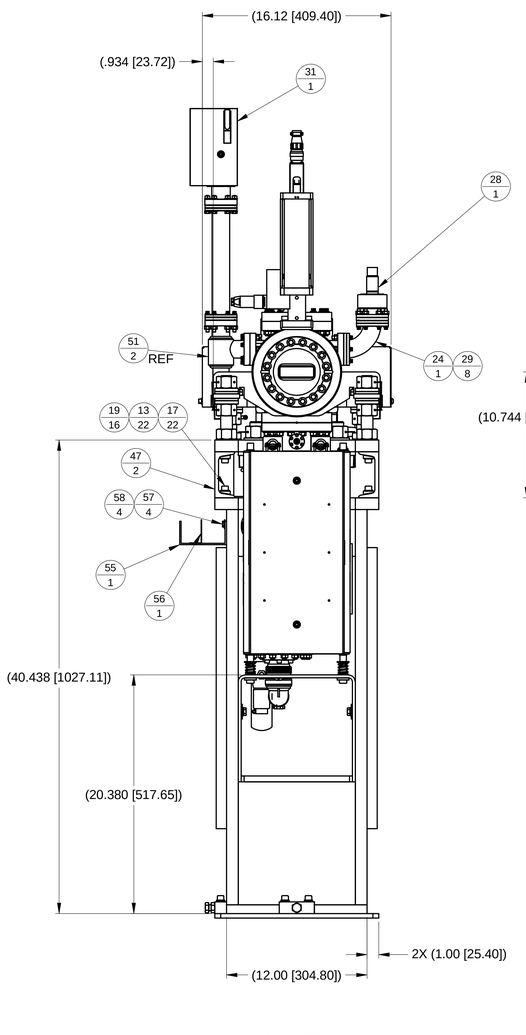


**BACK VIEW**

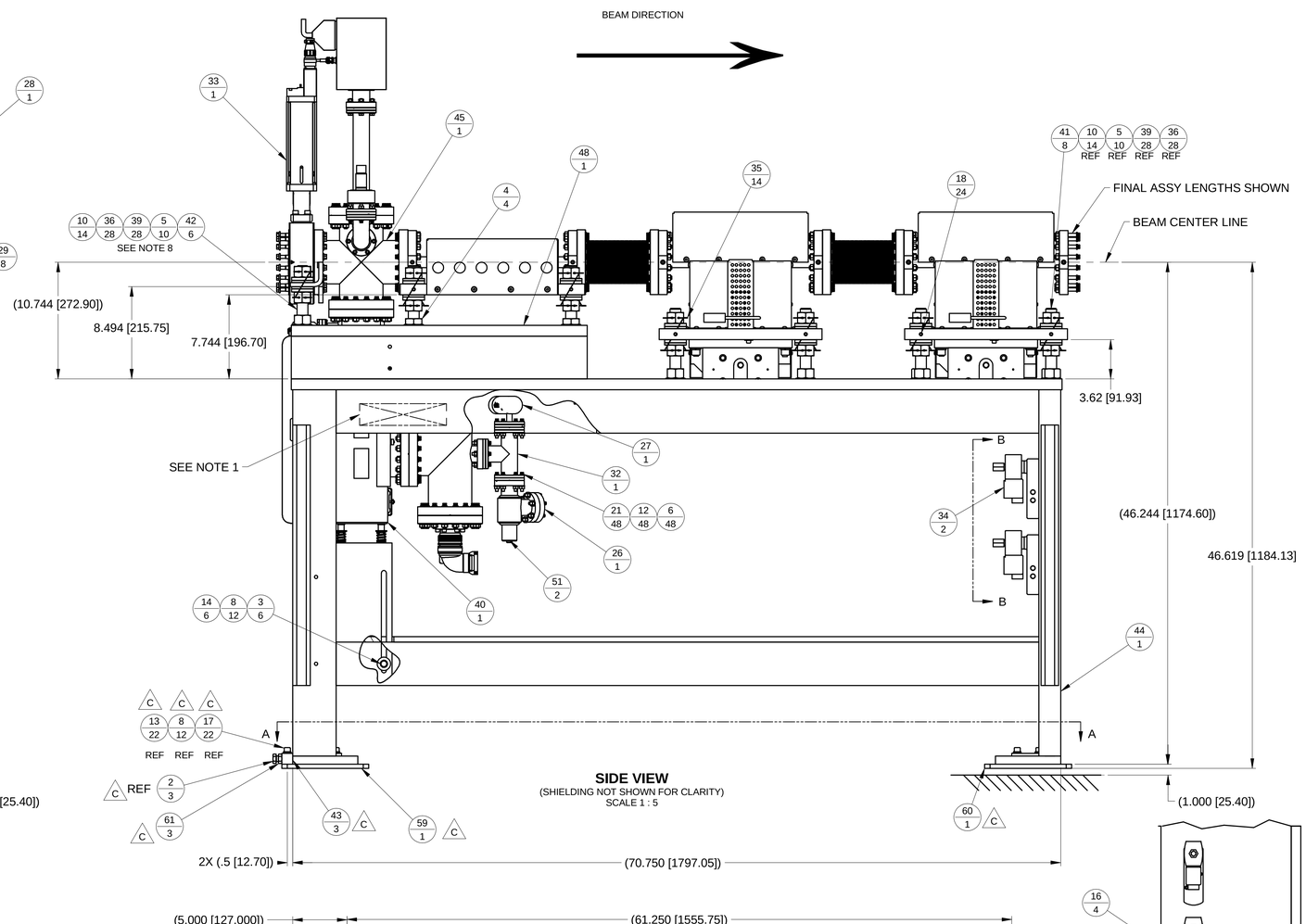


**SIDE VIEW**
(SHIELDING NOT SHOWN FOR CLARITY)
SCALE 1 : 5

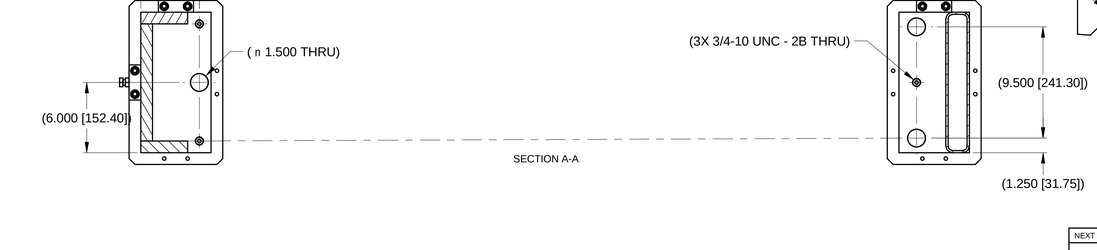


SECTION A-A

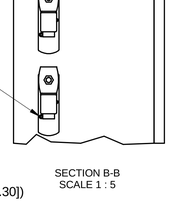

SECTION B-B
SCALE 1 : 5

| ITEM | QTY | PART NUMBER | DESCRIPTION | MATERIAL |
|---|---|---|---|---|
| 61 | 3 | ANSI B18.2.2 - 1/2 - 13 | Hex Nuts (Inch Series) Hex Jam Nut | Steel, Mild |
| 60 | 1 | SR-FE-SS-2701 | PLATE,INTERFACE, STAND, (DS) | STAINLESS STEEL TYPE 304 PER ASTM A240 |
| 59 | 1 | SR-FE-SS-2703 | PLATE, INTERFACE, STAND, (US) | STAINLESS STEEL TYPE 304 PER ASTM A240 |
| 58 | 4 | ANSI B18.22.1 - 1/4 - Regular - Type B | Plain Washer (Inch )Type A and B | Steel, Mild |
| 57 | 4 | ANSI B18.2.1 - 1/4-20 UNC - 0.75 | Hex Cap Screw | Steel, Mild |
| 56 | 1 | PI-CBLT-0002 | DIVIDER, CABLE TRAY | Steel |
| 55 | 1 | PI-CBLT-0001-03 | TRAY, CABLE, 5FT | Generic |
| 54 | 1 | | | |
| 53 | 1 | SR-FE-SS-3000 | SAFETY SHUTTER, ASSY | |
| 52 | 1 | | | |
| 51 | 2 | SR-VA-VLV-0001 | VALVE, RIGHT ANGLE, 2.75 FLANGE | |
| 48 | 1 | SR-FE-SS-2313 | PLATE, MTG, COLLIMATOR | HR Steel, Per ASTM A36 |
| 47 | 2 | SR-FE-SS-2312 | SUPPORT, CHANNEL, MTG PLATE | Steel "C" CHANNEL, 4.00 x 1.72 x .321, Per ASTM A36 |
| 46 | 1 | SR-FE-SS-2900 | SAFETY SHUTTER, ASSY | |
| 45 | 1 | SR-FE-SS-2176 | CROSS, WELDMENT | 304 SST |
| 44 | 1 | SR-FE-SP-2620 | STAND WELDMENT, SAFETY SHUTTER | |
| 43 | 3 | SR-FE-SS-2702 | BLOCK, INTERFACE, STAND | ALUM, 6061-T651 PER ASTM B209 |
| 42 | 6 | SR-FE-SP-0032 | ROD, THREADED, 1-8 UNC-2A, 6.5" | Steel, 4140 Zinc Pl |
| 41 | 8 | SR-FE-SP-0031 | ROD, THREADED, 1-8 UNC-2A, 7.5" | Steel, 4140 Zinc Pl |
| 40 | 1 | SR-FE-PMP-0020 | PUMP ASSY, COM | |
| 39 | 28 | SR-FE-MSK-0022 | NUT,SAFETY WIRE | Steel, Mild, Zinc Pl |
| 38 | 1 | SR-FE-CO-1600 | COLLIMATOR, LEAD, LCO2, 1" X 3" | |
| 37 | 2 | SR-FE-BLW-0039 | WELDED, BELLOWS, 6" CF FLG | |
| 36 | 28 | PI-WSHR-0011 | WASHER, SPHERICAL, 1" | 12L14 Hardened Steel, Zinc Pl |
| 35 | 14 | PI-WIRE-0002 | SAFETY WIRE, 3" | 304 SST |
| 34 | 2 | PI-VLV-0017 | VALVE, LOW PWR SOLENOID | |
| 33 | 1 | PI-VLV-0002 | VALVE, FAST SHUTTER | |
| 32 | 1 | PI-TEE-0008 | TEE, 2.75 CF FLANGE FITTING | 304 SST |
| 31 | 1 | PI-RGA-0001 | HAL 201 CHANNEL PROBE & RF HEAD | |
| 30 | 11 | PI-GSKT-0006 | GASKET, COPPER, 4.01 ID (6.00 CF) | COPPER, OFHC |
| 29 | 8 | PI-GSKT-0003 | GASKET, COPPER, 1.45 ID (2.75 CF) | COPPER, OFHC |
| 28 | 1 | PI-GAGE-0003 | GAUGE, COLD CATHODE, SERIES 77 | |
| 27 | 1 | PI-GAGE-0001 | GAUGE, PIRANI | |
| 26 | 1 | PI-FLG-0003 | FLANGE, BLANK, NR, DIA. 2.75 CF | Stainless Steel, Type 304 Per ASTM A240 |
| 25 | 1 | PI-FLG-0001 | FLANGE, NON-ROTATABLE, 6 IN, BLANK | SST, Austenitic |
| 24 | 1 | PI-ELB-0030 | ELBOW, 2.75 CF FLANGE FITTING | 304 SST |
| 23 | 32 | IFI 536 - M8x1.25 x 35 | Hex Flange Screw - Regular Thread - Metric | 300 Series SST, Silver Pl |
| 22 | 128 | IFI 115 - 5/16 - 24 - 2 | Flange 12-Point Screw | 300 Series SST, Silver Pl |
| 21 | 48 | IFI 115 - 1/4 - 28 - 1 1/2 | Flange 12-Point Screw | 300 Series SST, Silver Pl |
| 19 | 16 | ANSI/ASME B18.23.1 - 3/8 | Beveled Washer | Steel, Mild, Zinc Pl |
| 18 | 24 | ANSI B18.3 - 3/8-16 UNC x 0.75 | Hexagon Socket Set Screw - Half Dog Point | SST |
| 17 | 22 | ANSI B18.3 - 3/8 - 16 UNC - 1 1/4 HS HCS | Hexagon Socket Head Cap Screw | Steel, Mild, Zinc Pl |
| 16 | 4 | ANSI B18.3 - 10-32 UNF - 1.25 HS HCS | Hexagon Socket Head Cap Screw | Steel, Mild, Zinc Pl |
| 15 | 128 | ANSI B18.22.1 - 5/16 - narrow | Plain Washer (Inch ) | SST |
| 14 | 6 | ANSI B18.22.1 - 3/8 - wide | Plain Washer (Inch ) | Steel, Mild, Zinc Pl |
| 13 | 22 | ANSI B18.22.1 - 3/8 - narrow | Plain Washer (Inch ) | Steel, Mild, Zinc Pl |
| 12 | 48 | ANSI B18.22.1 - 1/4 - narrow | Plain Washer (Inch ) | SST |
| 10 | 14 | ANSI B18.22.1 - 1 - narrow | Plain Washer (Inch ) | Steel, Mild, Zinc Pl |
| 8 | 12 | ANSI B18.21.1 - 0.375 | Helical Spring Lock Washers | Steel, Mild, Zinc Pl |
| 7 | 128 | ANSI B18.2.2 - 5/16 - 24 | Hex Nut | SST |
| 6 | 48 | ANSI B18.2.2 - 1/4 - 28 | Hex Nut | SST |
| 5 | 10 | ANSI B18.2.2 - 1 - 8 | Hex Nut | Steel, Mild, Zinc Pl |
| 4 | 4 | ANSI B18.2.2 - 1 - 8 | Hex Jam Nut | Steel, Mild, Zinc Pl |
| 3 | 6 | ANSI B18.2.1 - 3/8-16 UNC - 1.25 | Hex Cap Screw | Steel, Mild, Zinc Pl |
| 2 | 3 | ANSI B18.2.1 - 1/2-13 UNC - 1.5 | Hex Cap Screw | Steel, Mild, Zinc Pl |

PARTS LIST

UNLESS OTHERWISE SPECIFIED
ALL DIMENSIONS ARE IN INCHES
DIMENSIONS IN BRACKETS [xx.xx] (WHERE PRESENT) ARE MILLIMETERS AND ARE FOR REFERENCE ONLY
INTERPRET DRAWING AS PER ASME Y14.5-1994 OR Y32.2-1975

| DIMENSIONAL TOLERANCES | ANGULAR TOLERANCE |
|---|---|
| X. ± 0.060 | ±.5° |
| .X ± 0.030 | Finish 125 |
| .XX ± 0.015 | |
| .XXX ± 0.005 | |

BREAK EDGES & SHARP CORNERS 0.005 MIN. TO 0.030 MAX

BROOKHAVEN NATIONAL LABORATORY
BROOKHAVEN SCIENCE ASSOCIATES LLC
UPTON, NEW YORK 11973
Exploring Life's Mysteries, Protecting its Future

NSLS II NATIONAL SYNCHROTRON LIGHT SOURCE II

| | | |
|---|---|---|
| DRAWN BY | A.DESANTIS | 10/19/2012 |
| CHECKED BY | C AMARITO | 10/2013 |
| VACUUM APPROVAL | H HSEUH | 10/2013 |
| ENGINEER APPROVAL | C.AMUNDSEN | 10/2013 |
| SUPERVISOR APPROVAL | S SHARMA | 10/2013 |
| ES&H APPROVAL | A ACKERMAN | 10/2013 |
| QA APPROVAL | E CHESWICK | 10/2013 |

STORAGE RING
FRONT END, SAFETY SHUTTER
**SAFETY SHUTTER, ASSEMBLY**

SHEET SIZE: E
DRAWING/PART NUMBER: SR-FE-SS-2700
REVISION: D

NEXT ASSY: SR-FE-IVUN1-1300
PROJECT: NSLS-II
THIRD ANGLE PROJECTION
SCALE: SEE DWG VIEW
WBS# 1.03.04.07.03
ES&H RISK LEVEL A1
SHEET 1 OF 1

C:\Mech-Eng\LT\SR\FE\SS\SR-FE-SS-2700.dwr

RELEASED + EFFECTIVE

NOTES:

1. ALL ORDINATE DIMENSIONS ARE TAKEN FROM THE CENTER OF THE LONG (EVEN CELL) OR SHORT (ODD CELL) STRAIGHT SECTION AS NOTED.

| REVISION HISTORY | | | | | |
|---|---|---|---|---|---|
| REV | DESCRIPTION | DATE | DESIGNER | CHECKED BY | ENGINEER |
| A | RELEASE PER ECO-000728 | 6/2012 | C. LONGO | C. AMARITO | C. HETZEL |
| B | REVISED PER ECO-000827 | 7/2012 | C. LONGO | C. AMARITO | C. HETZEL |
| C | REVISED PER ECO-001015 | 11/2012 | J TUOZZOLO | C AMARITO | C. HETZEL |
| D | REVISED PER ECO-002989 | 3/2015 | C. LONGO | C. AMARITO | C. HETZEL |

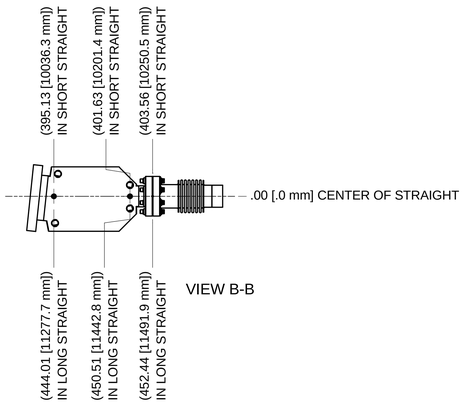


VIEW B-B

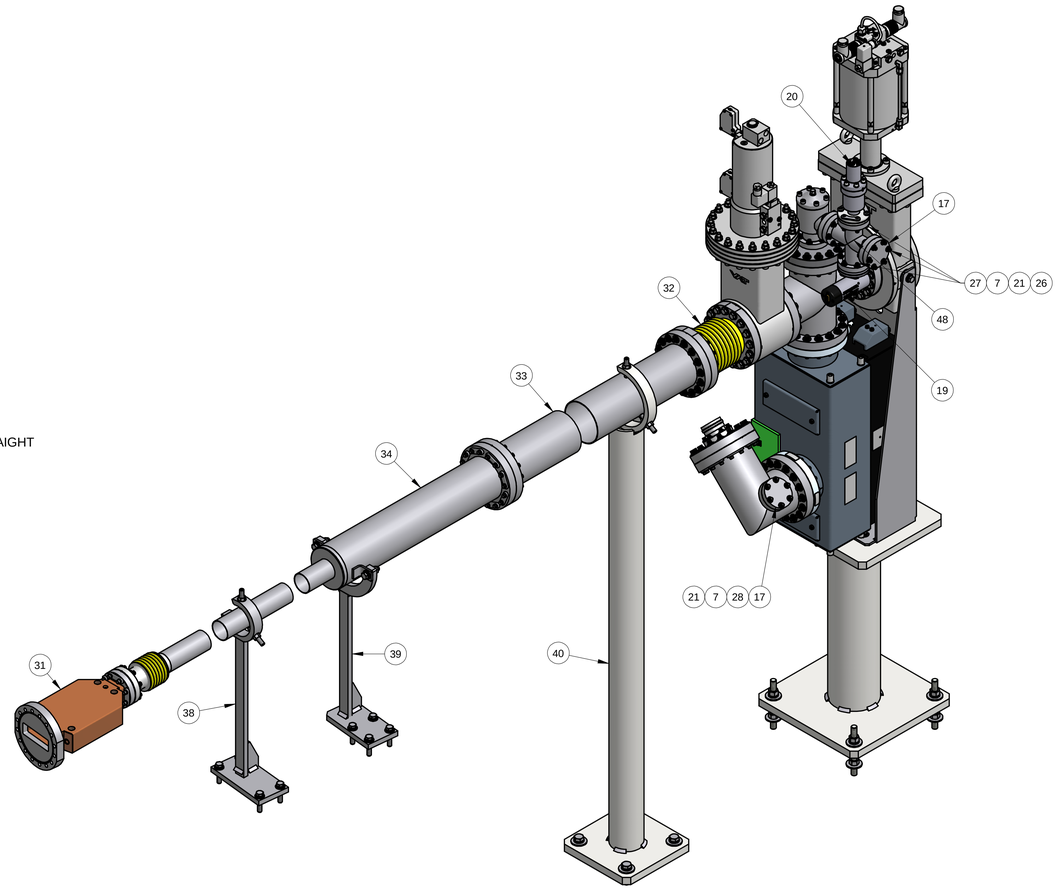


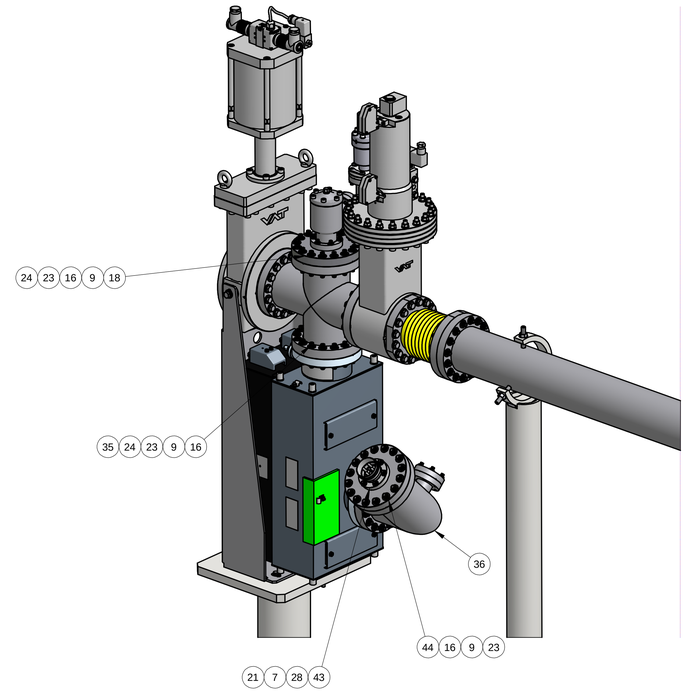


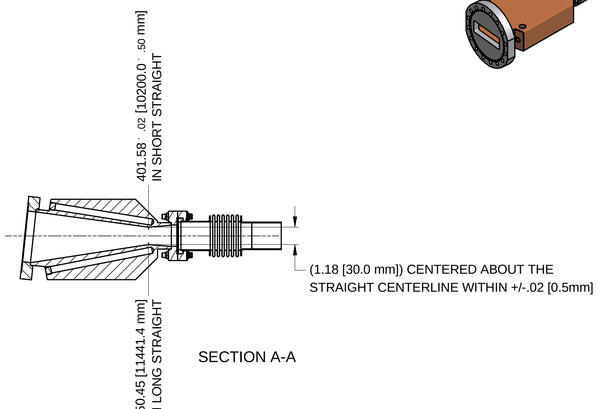


SECTION A-A

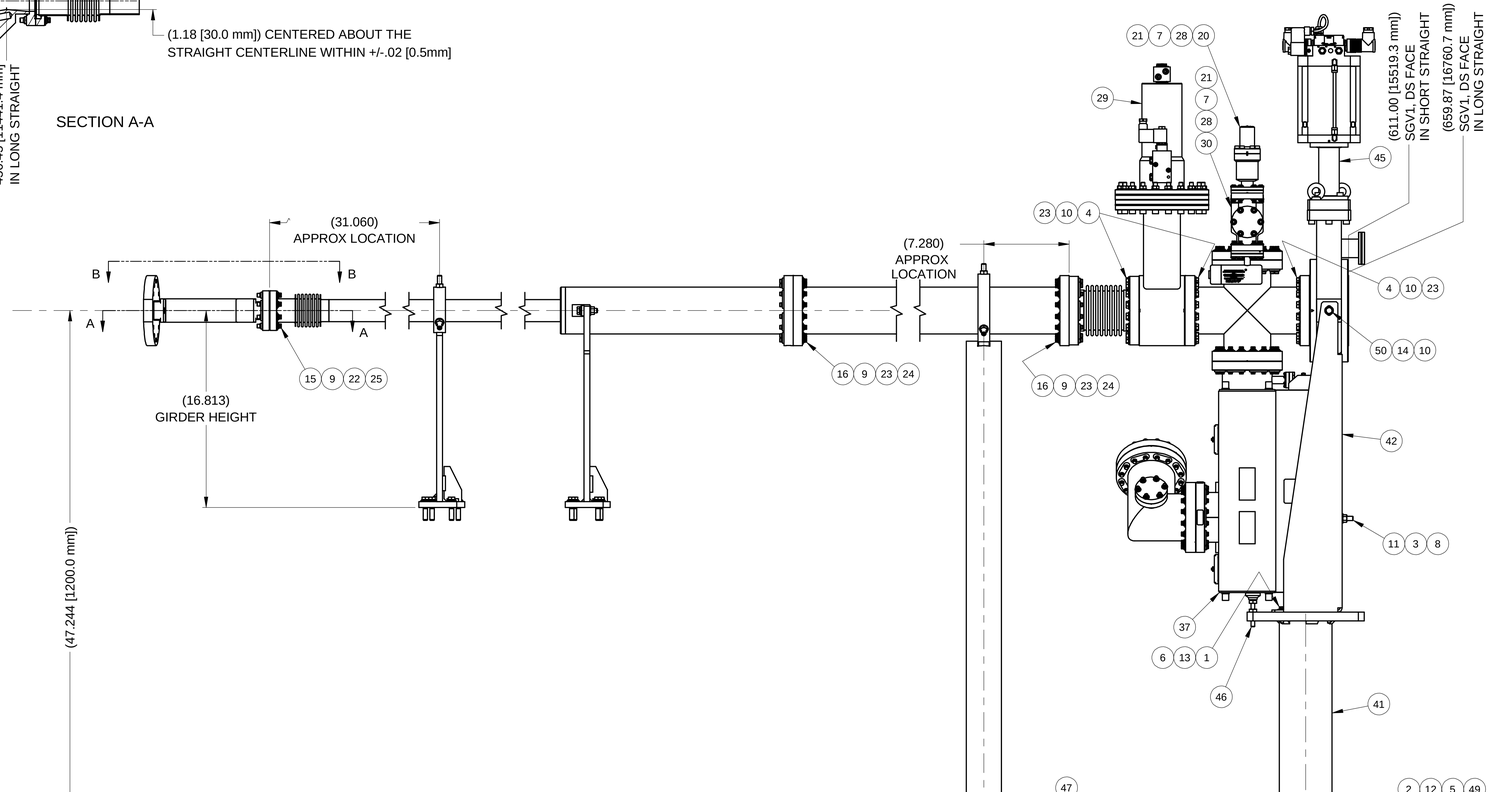


SCALE 1 : 5

| ITEM | QTY | PART NUMBER | DESCRIPTION | MATERIAL |
|---|---|---|---|---|
| 50 | 2 | ANSI B18.2.3.1M - M8 x 1.25 x 20 | Metric Hex Cap Screw | Steel, Mild |
| 49 | 4 | PI-ROD-0022 | ROD, 1/2"-13 UNC-1A X 5.0" LG | Steel |
| 48 | 1 | PI-CROSS-0015 | CROSS, 4 WAY, TUBULAR, 2.75 CF | STAINLESS STEEL TYPE 304 |
| 47 | 4 | ANSI B18.2.1 - 1/2-13 UNC - 1.75 | SCR, HEX CAP | STEEL, GR 8, ZINC PL |
| 46 | 1 | PI-STD-0004 | SWIVEL LEVELING MOUNT, 5/16-18 X 2" | Steel |
| 45 | 1 | SR-VA-VLV-0005 | VALVES, ALL METAL GATE VALVE, DN100, NR DIA. 6.00 CF | |
| 44 | 1 | SR-VA-TSP-0013 | FLANGE, ZERO LENGTH REDUCER, 6" CF TO 2.75" CF | Stainless Steel, Type 304, PER ASTM A240 |
| 43 | 1 | SR-VA-TSP-0001 | PUMP, TITANIUM SUBLIMATOR | |
| 42 | 1 | SR-VA-STD-1172 | SUPPORT STAND WELD, GV (DN 100) | |
| 41 | 1 | SR-VA-STD-1170 | STAND, GV SUPPORT, WELD | |
| 40 | 1 | SR-VA-STD-1162 | SUPPORT ASSY, S3 EXIT, DWNSTRM | |
| 39 | 1 | SR-VA-STD-1161 | SUPPORT ASSY, S3 EXIT, FIXED | |
| 38 | 1 | SR-VA-STD-1160 | SUPPORT ASSY, S3 EXIT, UPSTRM | |
| 37 | 1 | SR-VA-PMP-2013 | PUMP. ION, 200 L/S 6.00 CF, VAC CHM | |
| 36 | 1 | SR-VA-PMP-0028 | ELBOW, MITERED | |
| 35 | 1 | SR-VA-CHM-0308 | CROSS, 4-WAY, TUBULAR BODY, 6.00 CF | |
| 34 | 1 | SR-VA-CHM-0305 | CHM, S3 EXIT (UNDULATOR) WELDMENT | |
| 33 | 1 | SR-VA-CHM-0304 | S3 EXIT PIPE EXT, WELDMENT | |
| 32 | 1 | SR-VA-BLW-0003 | BELLOWS, WELD, 6.00 CF X 6.00 NOM LENGTH | |
| 31 | 1 | SR-VA-ABSW-2001 | ABSORBER, UNDULATOR | |
| 30 | 1 | PI-VLV-0023 | VALVE, ALL METAL ANGLE, EASY CLOSE | |
| 29 | 1 | PI-VLV-0027 | STOP, PHOTON BEAM | |
| 28 | 18 | PI-SCR-0054 | SCR, FLANGE, 12-PT, .250-28 X .88 | SST, SILVER PL |
| 27 | 24 | PI-SCR-0053 | SCR, FLANGE, 12-PT, .250-28 X 1.25 | SST, SILVER PL |
| 26 | 12 | PI-NUT-0020 | PLATE NUT, 2.75 CF | |
| 25 | 4 | PI-NUT-0019 | PLATE NUT, 3.37 CF | STAINLESS STEEL |
| 24 | 48 | PI-NUT-0018 | PLATE NUT, 6.00 CF | STAINLESS STEEL |
| 23 | 9 | PI-GSKT-0006 | GASKET, COPPER, 4.01 ID (6.00 CF) | |
| 22 | 1 | PI-GSKT-0004 | GASKET, COPPER, 2.01 ID (3.37 CF) | |
| 21 | 6 | PI-GSKT-0003 | GASKET, COPPER, 1.45 ID (2.75 CF) | |
| 20 | 1 | PI-GAGE-0002 | GAUGE, COLD CATHODE | |
| 19 | 1 | PI-GAGE-0001 | GAUGE, PIRANI | |
| 18 | 1 | PI-FLG-0042 | FLANGE, ZERO LENGTH REDUCER, 6" CF TO 2.75" CF | |
| 17 | 2 | PI-FLG-0003 | FLANGE, BLANK, NR, DIA. 2.75 CF | |
| 16 | 96 | IFI 115 - 5/16 - 24 - 2 | SCR, FLANGE, 12 PT | SST TYPE 304, SILVER PL |
| 15 | 8 | IFI 115 - 5/16 - 24 - 1 3/4 | SCR, FLANGE, 12 PT | SST TYPE 304, SILVER PL |
| 14 | 2 | ASME B18.21.2M - 8 | WASHER, LOCK, HELICAL SPRING, METRIC | SST TYPE 304 |
| 13 | 4 | ASME B18.21.1 - 1/4 | WASHER, LOCK, HELICAL SPRING | SST TYPE 304 |
| 12 | 8 | ASME B18.21.1 - 1/2 | WASHER, LOCK, HELICAL SPRING | STEEL, GR 8, ZINC PL |
| 11 | 1 | ANSI B18.3 - 3/8-16 UNC x 1.75 | SCR, SET, OVAL PT | STEEL, GR 8, ZINC PL |
| 10 | 50 | ANSI B18.22M - 8 N | WASHER, PLAIN, METRIC | SST TYPE 304 |
| 9 | 104 | ANSI B18.22.1 - 5/16 - narrow - Type A | WASHER, PLAIN | SST TYPE 304 |
| 8 | 1 | ANSI B18.22.1 - 3/8 - narrow - Type A | WASHER, PLAIN | STEEL, GR 8, ZINC PL |
| 7 | 42 | ANSI B18.22.1 - 1/4 - narrow - Type B | WASHER, PLAIN | SST TYPE 304 |
| 6 | 4 | ANSI B18.22.1 - 1/4 - Regular - Type B | WASHER, PLAIN | SST TYPE 304 |
| 5 | 16 | ANSI B18.22.1 - 1/2 - wide - Type A | WASHER, PLAIN | STEEL, GR 8, ZINC PL |
| 4 | 48 | ANSI B18.2.3.1M - M8 x 1.25 x 35 | SCR, CAP, HEX HD, METRIC | SST TYPE 304 |
| 3 | 1 | ANSI B18.2.2 - 3/8 - 16 | NUT, HEX | STEEL, GR 8, ZINC PL |
| 2 | 12 | ANSI B18.2.2 - 1/2 - 13 | NUT, HEX | STEEL, GR 8, ZINC PL |
| 1 | 4 | ANSI B18.2.1 - 1/4-20 UNC - 1.25 | SCR, HEX CAP | SST TYPE 304 |

PARTS LIST

UNLESS OTHERWISE SPECIFIED
ALL DIMENSIONS ARE IN INCHES
DIMENSIONS IN BRACKETS [xx.xx] (WHERE PRESENT) ARE MILLIMETERS AND ARE FOR REFERENCE ONLY
INTERPRET DRAWING AS PER ASME Y14.5-1994 OR Y32.3-1975

DIMENSIONAL TOLERANCES: X. ˙ 0.060, .X ˙ 0.030, .XX ˙ 0.015, .XXX ˙ 0.005
ANGULAR TOLERANCE: ˙ .5˙
FINISH: 125√
BREAK EDGES & SHARP CORNERS 0.005 MIN. TO 0.030 MAX

BROOKHAVEN NATIONAL LABORATORY
BROOKHAVEN NATIONAL LABORATORY
BROOKHAVEN SCIENCE ASSOCIATES
UPTON, NEW YORK 11973
Exploring Life's Mysteries, Protecting its Future

NSLS II NATIONAL SYNCHROTRON LIGHT SOURCE II

| | | |
|---|---|---|
| DRAWN BY | C. LONGO | 5/1/2012 |
| CHECKED BY | C. AMARITO | 6/2012 |
| VACUUM APPROVAL | H. HSEUH | 6/2012 |
| ENGINEER APPROVAL | C. HETZEL | 6/2012 |
| SUPERVISOR APPROVAL | H. HSEUH | 6/2012 |
| ES&H APPROVAL | N. GMUR | 6/2012 |
| QA APPROVAL | E. CHESWICK | 6/2012 |

STORAGE RING
VACUUM SYSTEMS, CHAMBERS
EXIT CHM SUBASSY, UNDULATORS (S3)

SHEET SIZE: E
DRAWING/PART NUMBER: SR-VA-CHM-3210
REVISION: D

NEXT ASSY:
PROJECT:
THIRD ANGLE PROJECTION
SCALE: SEE DWG VIEW
WBS# 1.03.04.03.01
ES&H RISK LEVEL: A1
SHEET 1 OF 1

C:\Mech-Eng\LT3SR\VAC\HMSR-VA-CHM-2210.dwr

RELEASED + EFFECTIVE