# 12ID (SMI) TOP-OFF RADIATION SAFETY ANALYSIS

## APPROVALS

10/11/2016

X Ray Fliller

Ray Fliller
Coordination Group for Top Off Safety Leader
Signed by: Fliller, Raymond

10/11/2016

X Ferdinand Willeke (for Tim…

Timur Shaftan
Interim Accelerator Division Director
Signed by: Willeke, Ferdinand

10/18/2016

X

Paul Zschack
Photon Science Division Director
Signed by: Zschack, Paul

10/11/2016

X

Steve Moss
Authorization Basis Manager
Signed by: Moss, Steven H

10/12/2016

X

Robert Lee
ESH Manager
Signed by: Lee, Robert J

10/10/2016

X

Elaine DiMasi
SMI Lead Beamline Scientist
Signed by: Dimasi, Elaine

| NSLS-II TECHNICAL NOTE<br>BROOKHAVEN NATIONAL LABORATORY | NUMBER:<br>**NSLSII-TOS-RPT-008** |
|---|---|
| AUTHORS:<br>A. Hanson, M. Benmerrouche, R. Fliller, and Y. Li | DATE:<br>10/11/2016 |
| ***12ID (SMI) Top-Off Radiation Safety Analysis*** | |

## 1. Introduction

The primary radiological safety concern for Top-Off injection, with the front end (FE) safety shutters open, is the scenario where injected electrons could be transported down to the beamline through the FE due to an erroneous combination of lattice magnetic field settings and beam energy. These electrons will scatter off the First Optics Enclosure (FOE) components, thereby leading to high dose rates on the FOE walls. The radiological consequences of this fault condition specifically for 12-ID (SMI) are analyzed and discussed in this report. For this beamline, all FE comonents, the ratchet wall collimators and many FOE components lie along the short straight (SS) centerline. The goal of the simulations documented here was to estimate the radiation dose levels generated outside the FOE during this Top-Off fault condition, thus evaluating the efficacy of the FE radiation safety components and the FOE shielding. This beamline was not covered by the Top-Off design report issued in 2014 [1].

The layout of the 12-ID (SMI) FE components is presented in Figure 1. One ARM is located near the sliding door of the FE. Another ARM is located on the sidewall of the FOE near the hutch door.

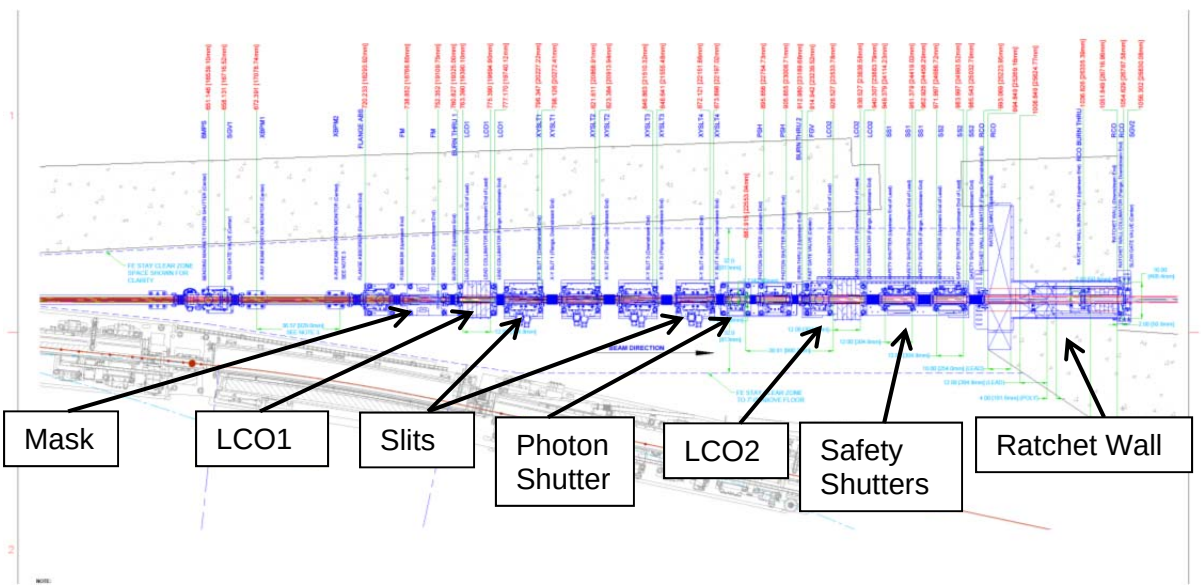


**Figure 1**: Layout of 12-ID (SMI) FE showing major components consisting of Masks, Collimators, Safety Shutters, and Ratchet Wall Collimator

Backward particle tracking analysis was performed for 12-ID (SMI) and has determined that the injected electrons will not travel beyond the lead collimator 2 (LCO2) in the FE. FLUKA simulations were performed with a pencil beam traveling from downstream aperture of fixed mask 1 (FM1) to the upstream face of LC02, both inboard and outboard at 5mm from the aperture edge. Simulations were also performed for the electron pencil beam hitting the front end slits.

The Top-Off backward particle tracking analysis for 12-ID (SMI) is discussed in Section 2, the FLUKA model is described in Section 3 and the results of the simulations are discussed in Section 4. A summary and conclusions are presented in Section 5.

This report can be used as a basis to approve the Top-Off Operation of the 12-ID (SMI) beamline, provided that the front end, beamline and shielding configuration are not changed. The Top-Off Operation of new beamlines and the approval process shall be in accordance with procedure PS-C-ASD-PRC-183 [2].

## 2. Top-Off Particle Tracking Analysis

The Top-Off Particle Tracking Analysis was presented in Ref. [3] and there have been no changes since that time. The reader is referred to Ref. [3].

## 3. Description of the FLUKA Model

The plan and elevation views of the FLUKA geometry used for the Top-Off simulations of the 12-ID (SMI) beamline are shown in Figures 2(a) and (b). The input used to generate the FLUKA model is listed in Appendix 1. The FLUKA input and output files are kept in the Radiation Physics folder. A plan view the FLUKA geometry with all beamline FOE components used in the 12ID-SMI topoff analysis is provided in Figure 3.

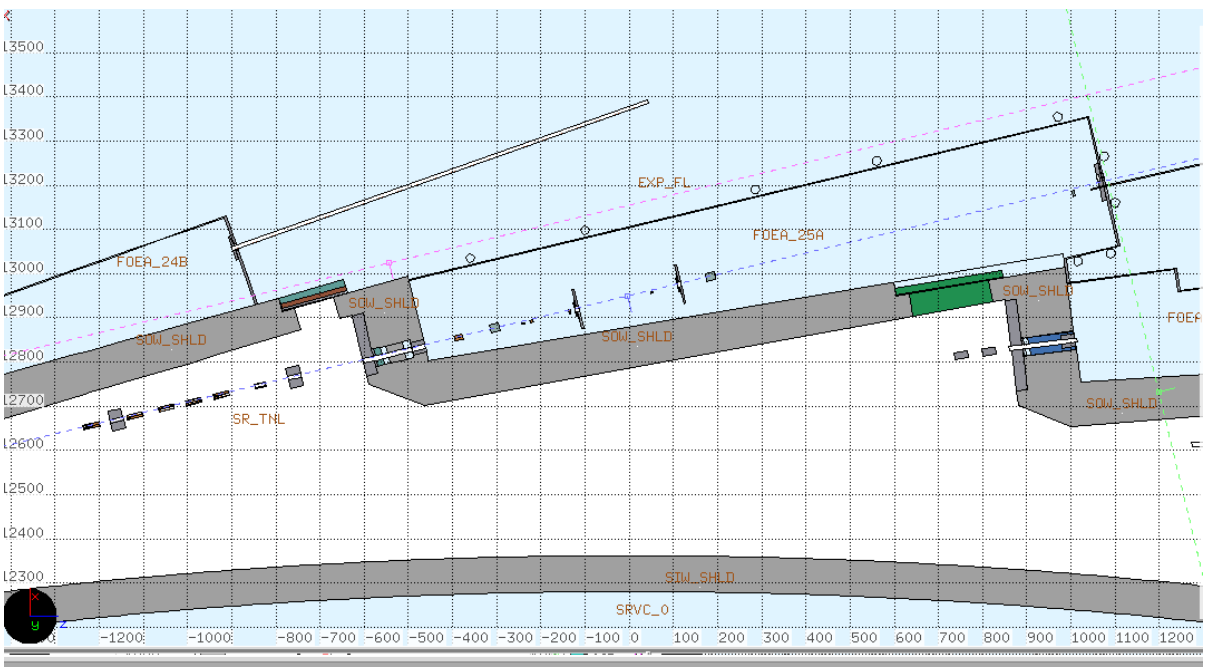


**Figure 2(a).** Plan view of the FLUKA geometry used in Top-Off simulation of the 12-ID (SMI) Beamline

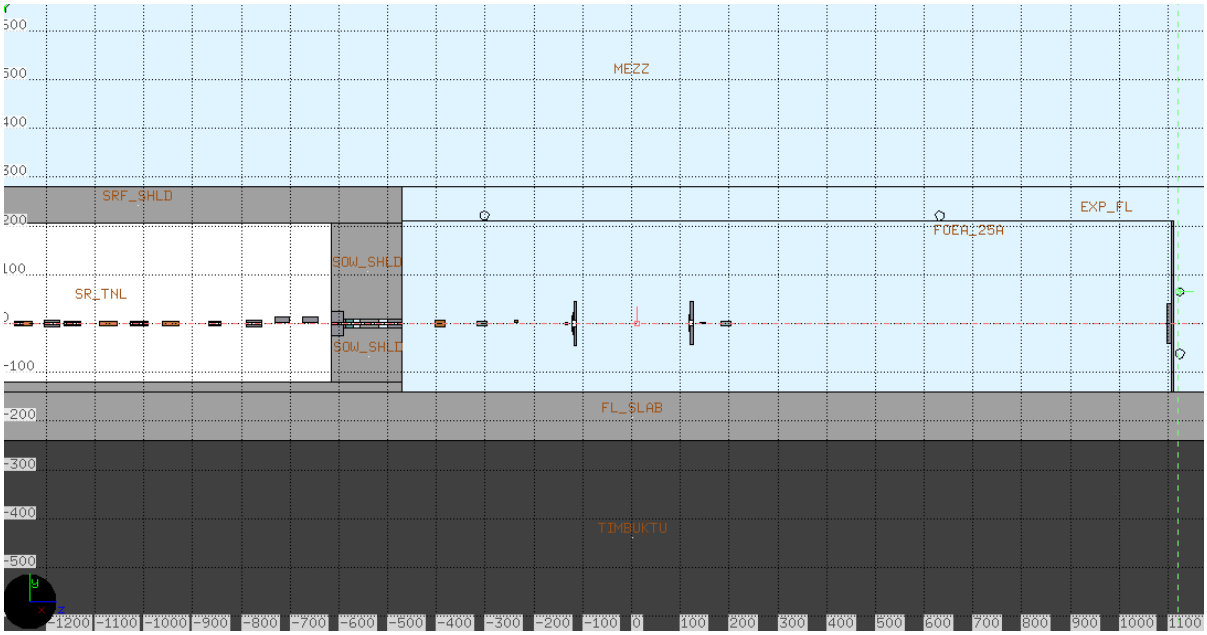


**Figure 2(b):** Elevation view of the FLUKA geometry used in Top-Off simulation of the 12-ID (SMI) Beamline

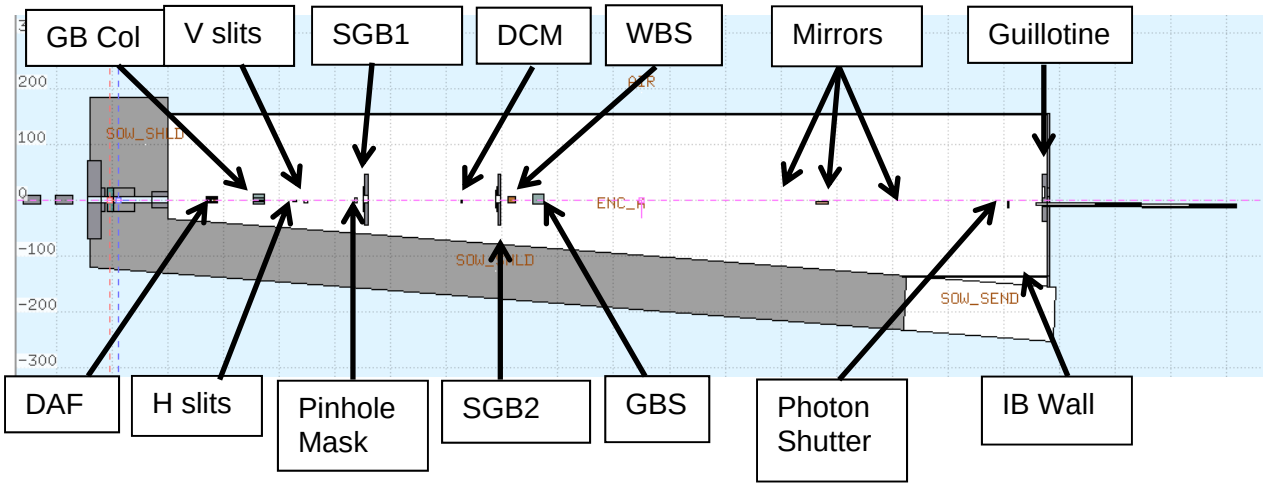


**Figure 3:** Plan view of the SMI Beamline components in the FOE used in the FLUKA geometry for Top-Off simulation of the 12-ID (SMI) Beamline.

## 4. Results for Top-Off FLUKA Simulations

In all FLUKA simulation, a pencil beam of 3 GeV electrons is assumed for the injected beam and all dose rates are normalized to a booster to storage ring injection charge rate of 45 nC/min. Based on the backward particle tracking analysis described in section 2, the beam is assumed lost at the safe endpoint (5 mm from the upstream aperture edge of LCO2).

The amount of radiation transmitted into the FOE is primarily determined by the aperture of the FE collimator LCO2 and the ratchet wall collimator RCO. The aperture dimensions for 12-ID (SMI) are compared to those of other NSLS-II beamlines in Table 1 [3].

**Table 1:** CO2 and RCO aperture dimensions.

| | LCO2 Dimensions X (mm) | LCO2 Dimensions Y (mm) | RCO Dimensions X (mm) | RCO Dimensions Y (mm) |
|---|---|---|---|---|
| **04ID-ISR** | **79.33** | **28.22** | **88.16** | **30.56** |
| **05ID-SRX** | **79.20** | **28.40** | **78.44** | **21.80** |
| **08ID-ISS** | **79.20** | **28.40** | **44.74** | **17.03** |
| | | | | |
| **12ID-SMI** | **83.88** | **27.24** | **95.29** | **31.09** |

The horizontal dimensions of the 12-ID (SMI) LCO2 and RCO apertures are larger than those for the other beamlines, but the vertical dimensions for the LCO2 is slightly smaller while the vertical dimension for RCO is slightly larger. The SMI simulations were undertaken to ensure that the larger horizontal apertures do not result in high dose rates on the FOE walls and roof.

The following four scenarios were considered in the FLUKA simulation analysis and the radiation dose results are reported in this note.

1. Injected beam starting at the inboard side of the downstream aperture of FM1 and directed toward the front face of LC02 at 5 mm from the inboard side of the aperture (Case 1: i_i).
2. Injected beam starting at the outboard side of the downstream aperture of FM1 and directed toward the front face of LC02 at 5 mm from the outboard side of the aperture (Case 2: o_o).
3. Injected beam starting at the inboard side of the downstream aperture of FM1 and directed toward the front face of LC02 at 5 mm from the outboard side of the aperture (Case 3: i_o).
4. Injected beam starting at the outboard side of the downstream aperture of FM1 and directed toward the front face of LC02 at 5 mm from the inboard side of the aperture (Case 4: o_i).

The dose rates on the downstream FOE wall were found to be much larger for cases 3 and 4 than for cases 1 and 2; therefore, cases 3 and 4 are described in more detail in this report.

Each of the four cases above was analyzed with the FE slits inserted and withdrawn.

### 4.1 Case 1: i_i

In this simulation, the injected electron beam was started downstream of the horizontal aperture on the inboard side of the FM1 and directed toward the front face of LCO2 at 5 mm from the inboard side of the horizontal aperture.

The total dose distributions (mrem/h) in the FE and FOE are shown in Figure 4a when the slits were withdrawn and in Figure 4b when the slits are inserted.

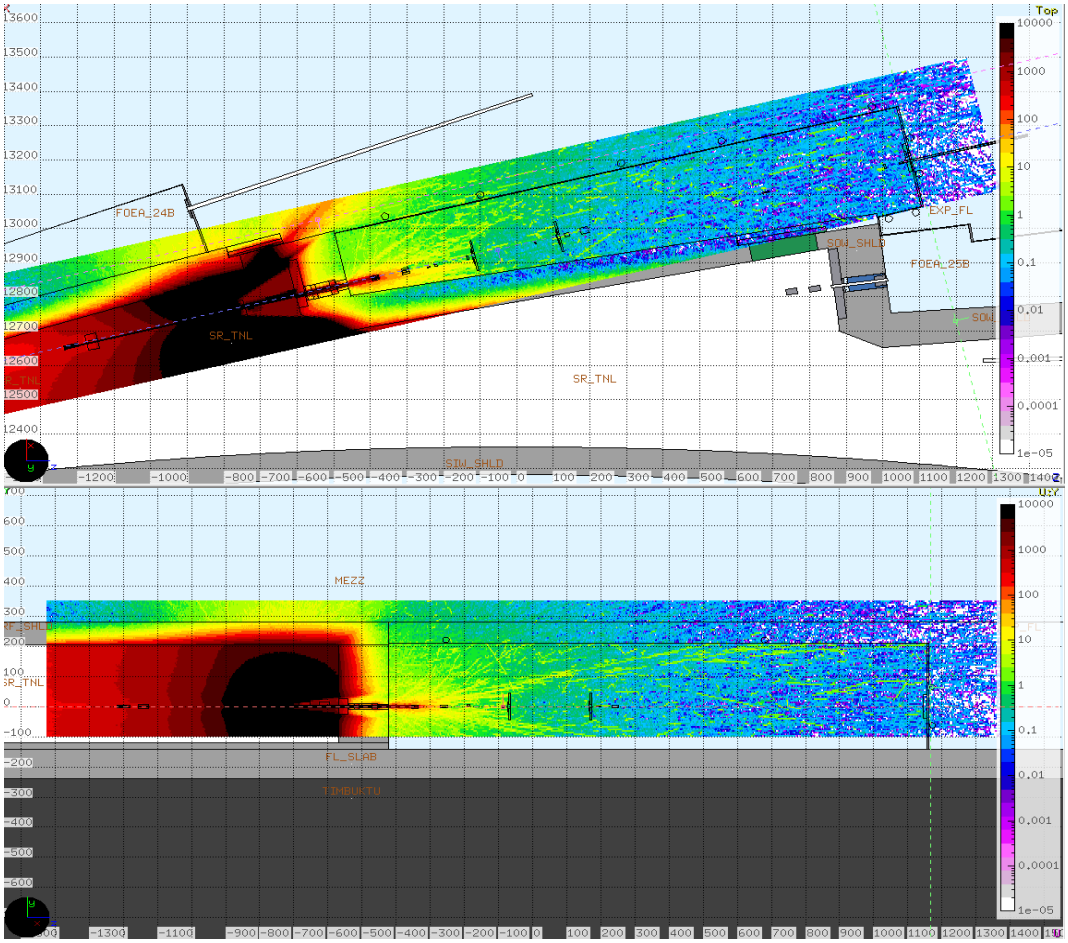


**Figure 4a**: Total dose rate distributions (mrem/h) when the slits are withdrawn. The Top view at y=0 is shown in the top figure and the elevation view in the bottom figure.

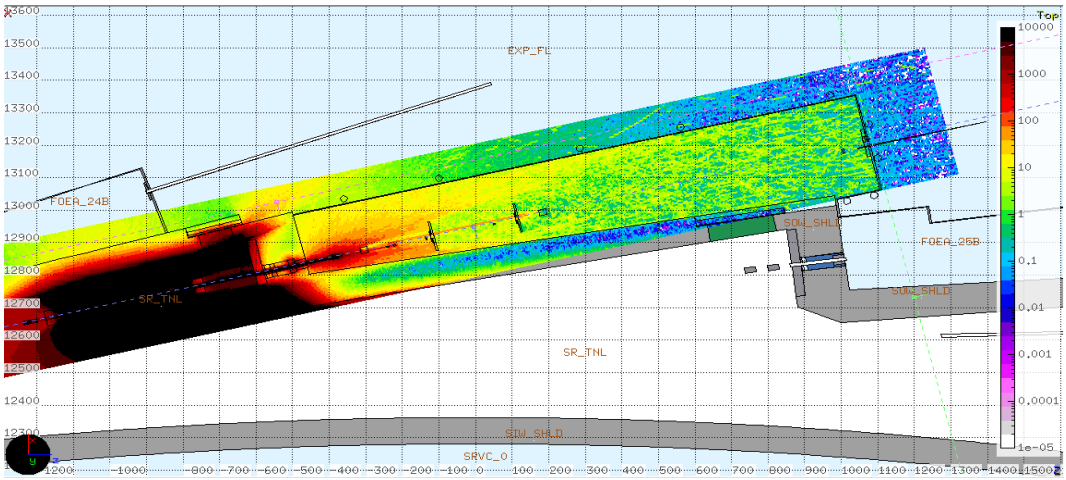

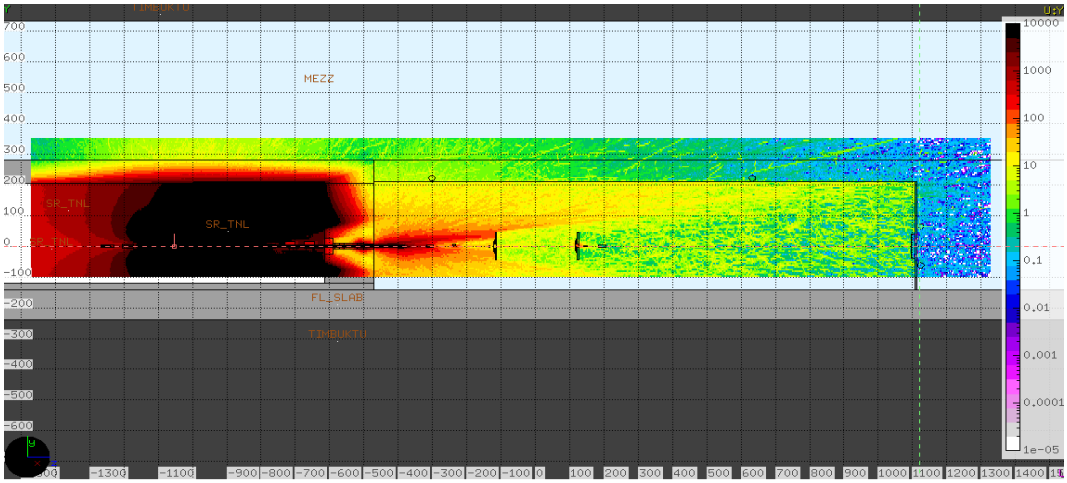


**Figure 4b**: Total dose rate distributions (mrem/h) when the slits were inserted. The Top view at y=0 is shown in the top figure and the elevation view in the bottom figure.

Total dose rates on the roof, sidewall and the downstream wall of the FOE were plotted and found to be well below 100 mrem/h goal set in reference 4. An example of the dose distribution at the roof, on contact are presented in Figure 5 with 5a being with the slits withdrawn and 5b with the slits inserted. The dose rates were less than 6 mrem/hr. The dose rate distributions along the sidewall were similar and the dose rate at the back wall was less than 1 mrem/hr.

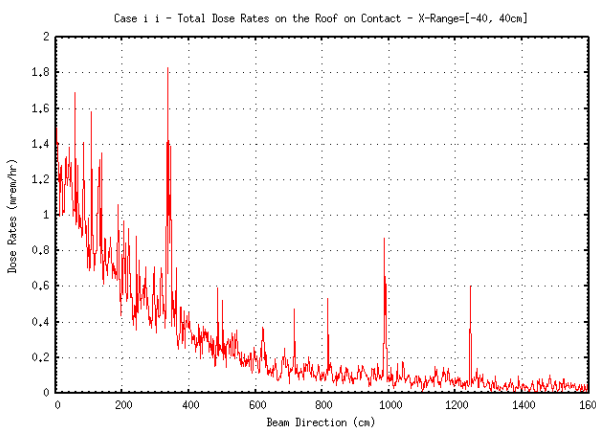


**Figure 5a**: Total dose rate distributions at the roof (mrem/h), on contact, when the slits were removed.

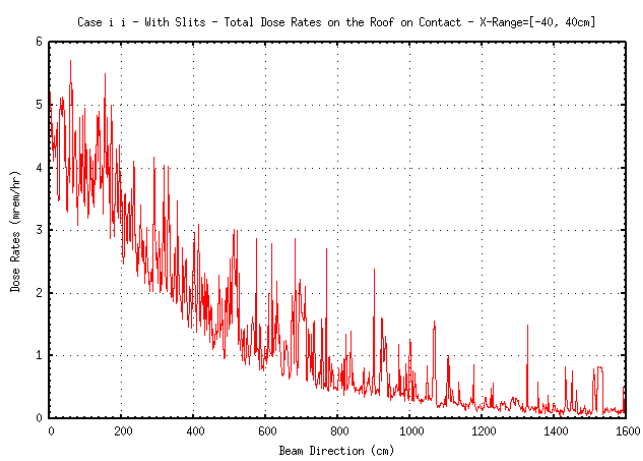


**Figure 5b**: Total dose rate distributions at the roof (mrem/h), on contact, when the slits were inserted.

### 4.2 Case 2: o_o

In this simulation, the injected electron beam was started downstream of the horizontal aperture on the outboard side of the FM1 and directed toward the front face of LCO2 at 5 mm from the outboard side of the horizontal aperture. Figure 6a shows the dose rates distributions (mrem/h) in the FE and the FOE when the slits are withdrawn. Figure 6b shows the dose rate distributions when the slits are inserted.

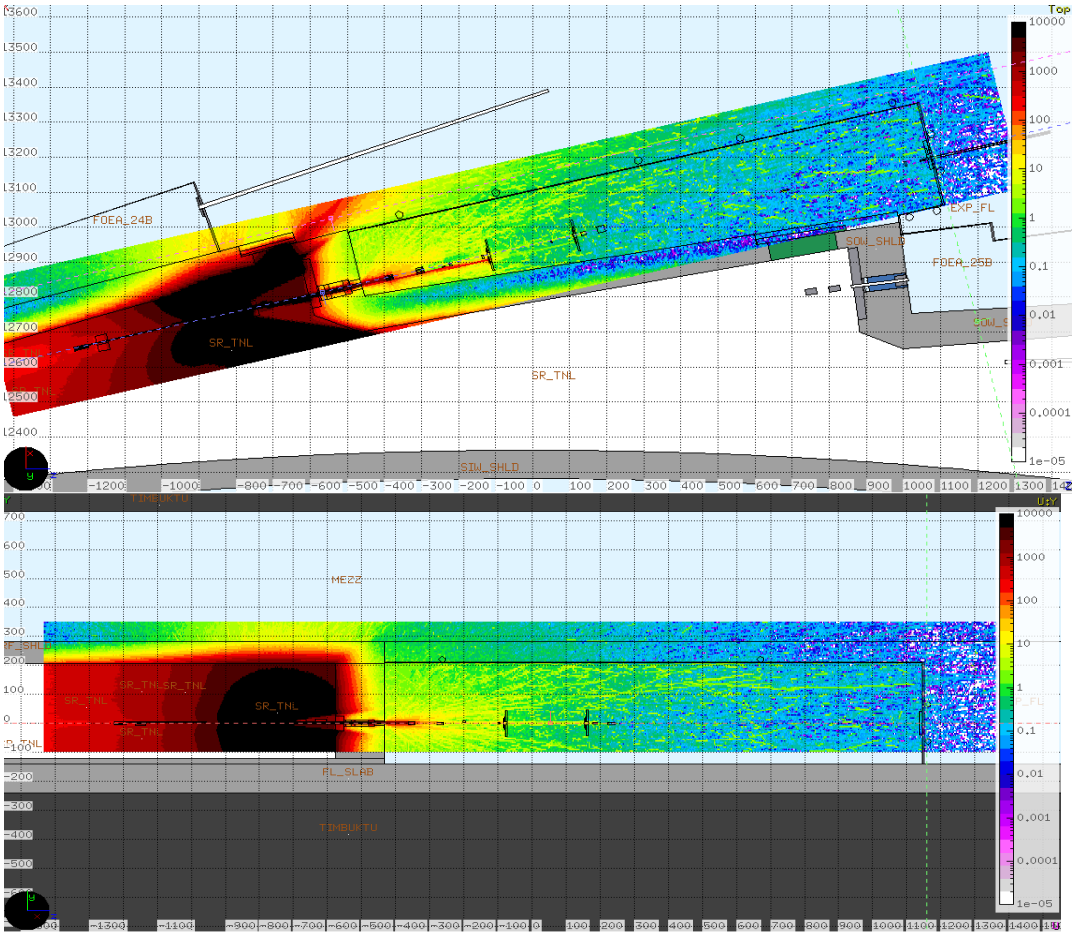


**Figure 6a**: Total dose rate distributions (mrem/h) for the o_o case with the slits removed. The Top view at y=0 is shown in the top figure and the elevation view in the bottom figure.

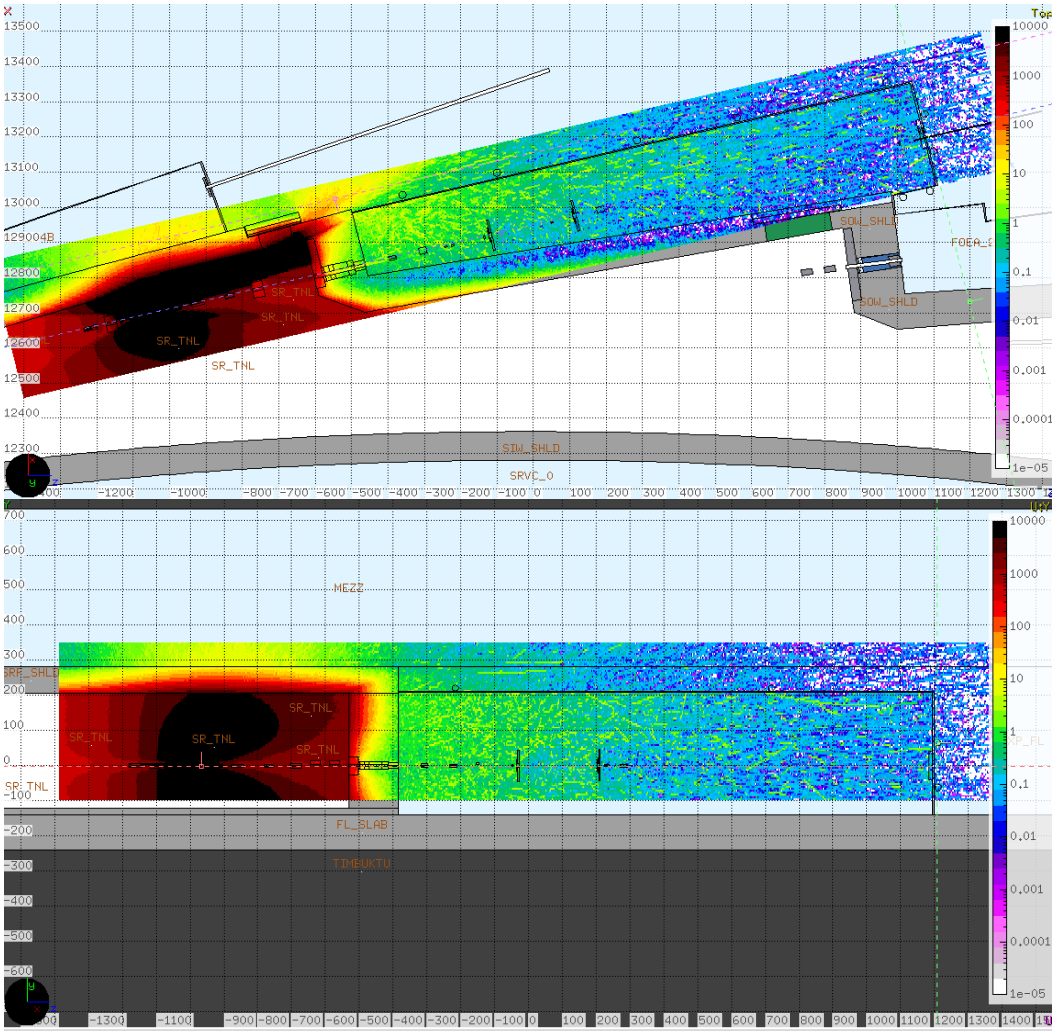


**Figure 6b**: Total dose rate distributions (mrem/h) for the o_o case with the slits inserted. The Top view at y=0 is shown in the top figure and the elevation view in the bottom figure.

These dose rate distributions are very similar to those for case i_i. In both cases, the total dose rates on the FOE walls and roof are below 100 mrem/hr for this fault condition. The maximum dose rates were calculated to be less than 5 mrem/hr at the upstream edge of the sidewall. The dose rates at the back wall were less than 1 mrem/hr.

### 4.3 Case 3: i_o

In this simulation, the injected electron beam was started downstream of the horizontal aperture on the inboard side of the FM1 and directed toward the front face of LCO2 at 5 mm from the outboard side of the horizontal aperture. Figure 7a shows the dose rates distributions (mrem/h) in the FE and the FOE when the slits are withdrawn. Figure 7b shows the dose rate distributions when the slits are inserted. As with the other cases, the dose rates had a maximum value at the sidewall of 5 mrem/hr near the ratchet wall and fell off to less than 1 mrem/hr at the back wall.

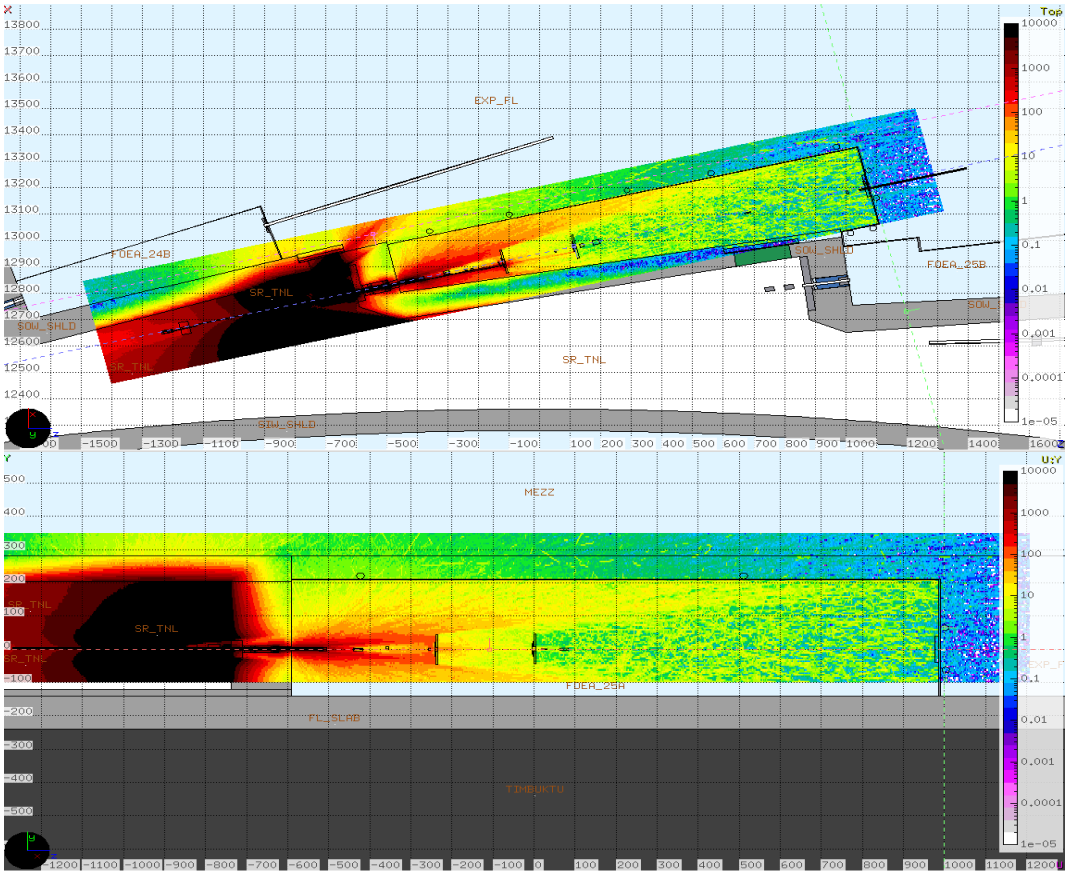


**Figure 7a**: Total dose rate distributions (mrem/h) for the i_o case with the slits removed. The elevation view at y=0 is shown in the top figure and the plan view in the bottom figure.

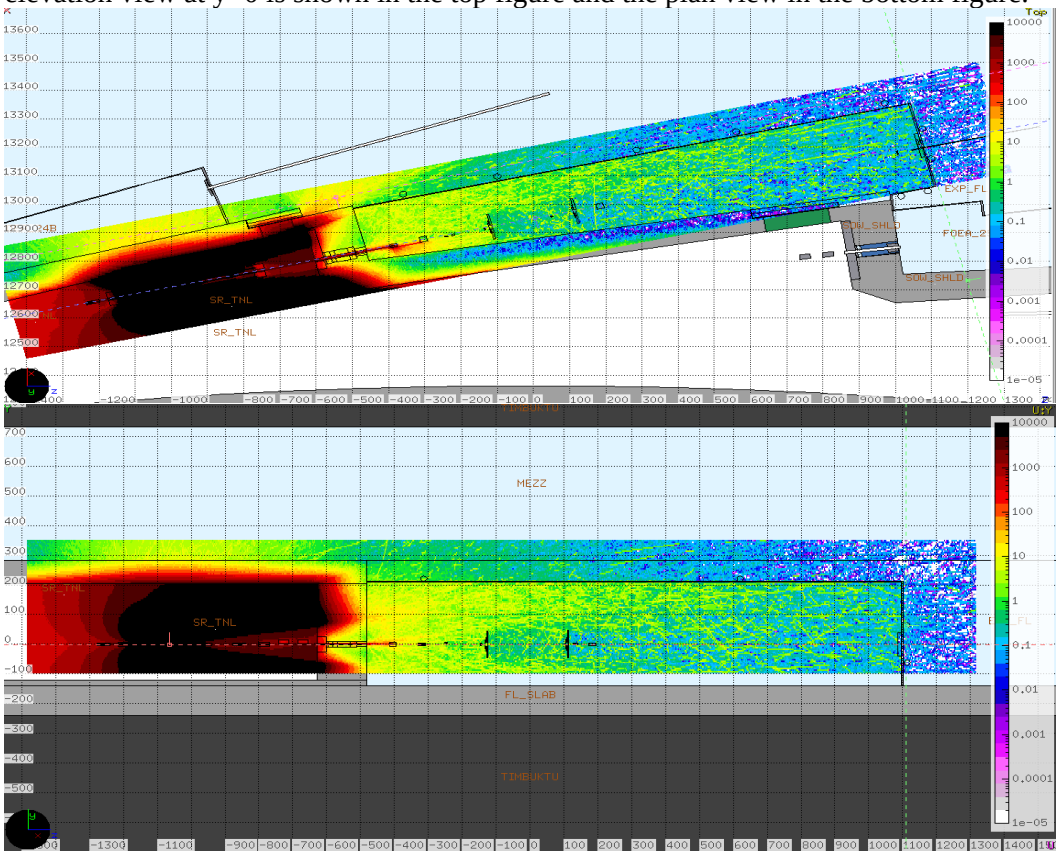


**Figure 7b**: Total dose rate distributions (mrem/h) for the i_o case with the slits inserted. The elevation view at y=0 is shown in the top figure and the plane view in the bottom figure.

### 4.4 Case 4: o_i

In this simulation, the injected electron beam was started downstream of the horizontal aperture on the outboard side of the FM1 and directed toward the front face of LCO2 at 5 mm from the inboard side of the horizontal aperture.

The total dose rate distributions are shown in Figure 8, and dose rates on the roof, sidewall and downstream FOE wall are all less than 5 mrem/hr.

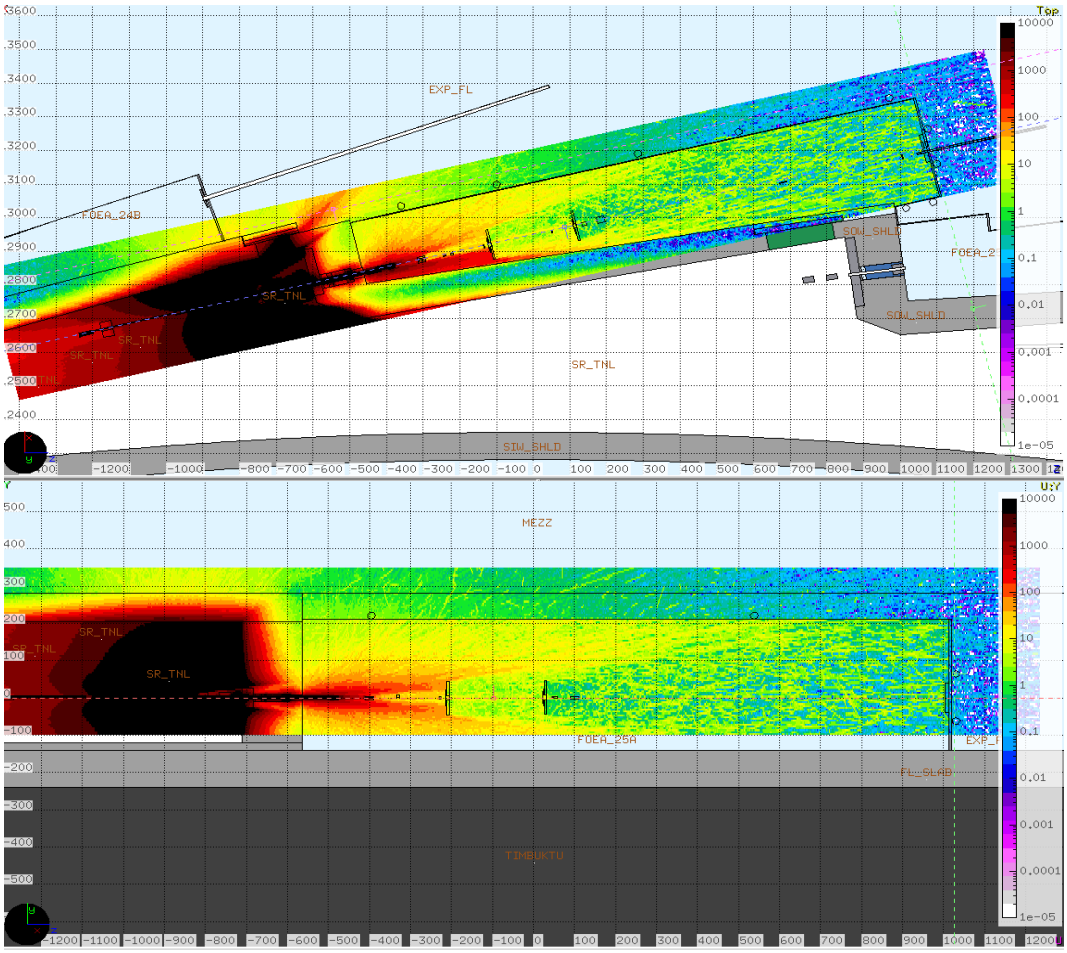


**Figure 8a**: Total dose rate distributions (mrem/h) for the o_i case with the slits withdrawn. The elevation view at y=0 is shown in the top figure and the plane view in the bottom figure.

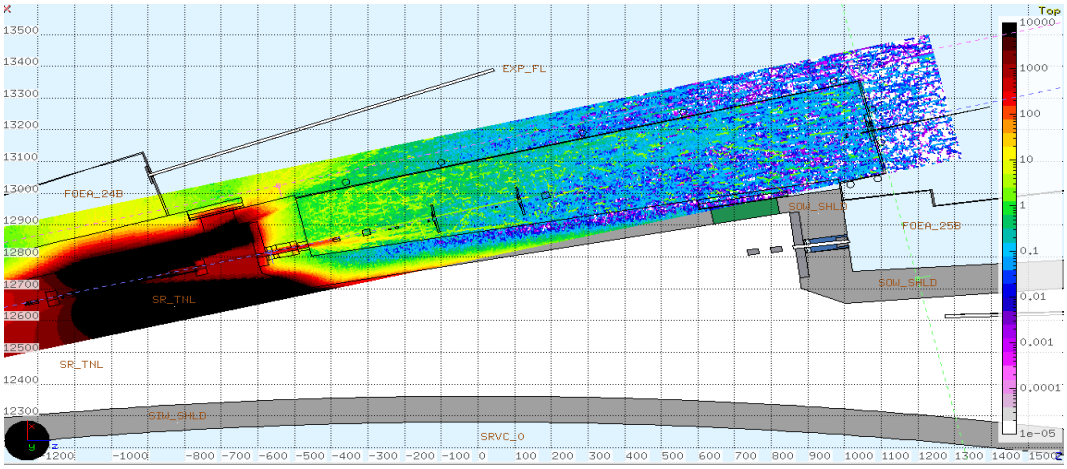

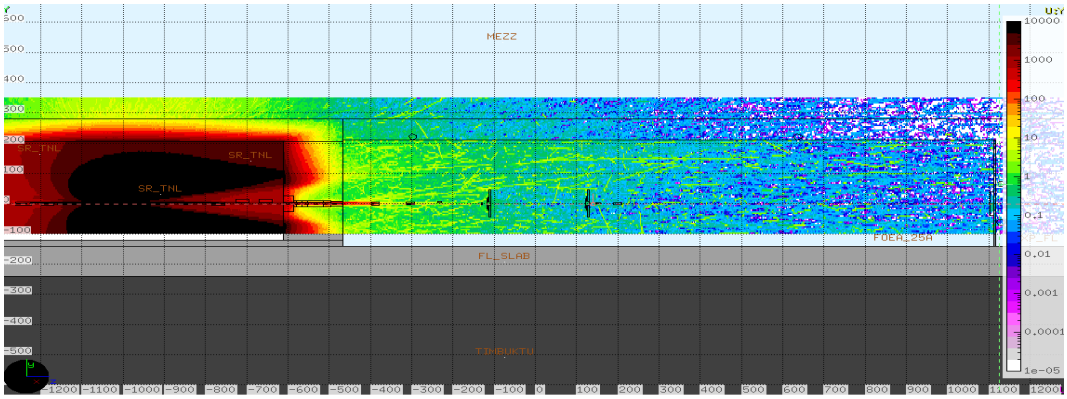


**Figure 8b**: Total dose rate distributions (mrem/h) for the o_i case with the slits inserted. The elevation view at y=0 is shown in the top figure and the plane view in the bottom figure.

### 4.5 Dose Rates at Three Detector Positions

Included in the FLUKA model are various detector locations so that dose can be determined. Their locations are indicated in Figure 9a, the top view, and Figure 9b, the side view. The Area Radiation Monitor (ARM) is located outside of the ratchet wall plug door, approximately 20 cm above the midplane of the beam. Along the sidewall are five detectors (DSW's) located at the midplane of the beam. Along the back wall are four detectors (DBW's). Two of the DBW's are located at the midplane of the beam and two are located above and below the midplane of the beam. Two detectors are located at on short I/B wall (DIW's) in the midplane of the beam. Finally, two detectors are located on the roof (DRF1, DRF2).

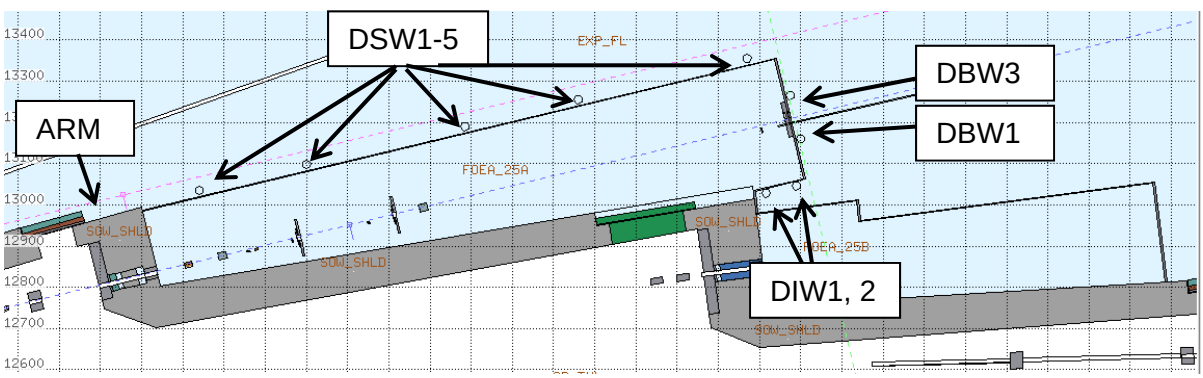


**Figure 9a: Top view showing the radiation monitors.**

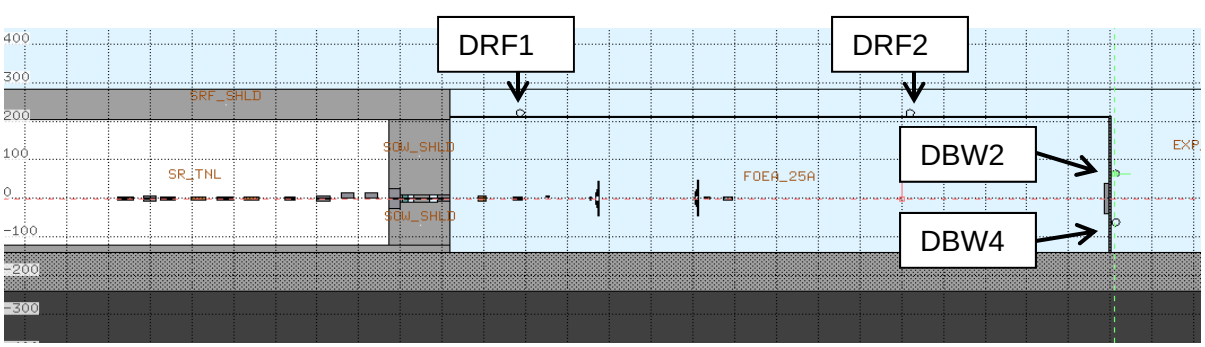


**Figure 9b: Top view showing the radiation monitors.**

Three detector locations were selected to extract the dose rates, ARM, DSW1 and DRF1. ARM was selected since it is expected to be in the highest radiation field for the 12ID-SMI beamline if a topoff accident were to occur. DSW1 and DRF1 were selected sinc they should have the highest dose rates of any of the detectors around the FOE. As shown in Fiugres 4.6a and 4.6b, DRF1 is located directly above the GB Collimator and DSW1 is located 60 cm upstream of the GB Collimator. Table 2 shows the values of dose rate from each of the three locations. This table demonstrates that, as before the area around the ratchet wall plug door will have the highest dose rate in the unlikely event of a topoff accident. Everywhere aound the 12ID-SMI beamline FOE shows dose rates well within the targeted guidelines.

**Table 2:** Summary of the Dose Rates at Three Locations around the FOE.

| | | With GBC and GBS | | | Without GBC and GBS | | |
|---|---|---|---|---|---|---|---|
| | | ARM | SW1 | RF1 | ARM | SW1 | RF1 |
| w/o Slits | i_i | 35 +/- 1.8% | < 10 | < 10 | 36 +/- 2.2% | < 10 | < 10 |
| | i_o | 68 +/- 1.2% | < 10 | < 10 | 66 +/- 1.4% | < 10 | < 10 |
| | o_i | 36 +/- 2.0% | < 10 | < 10 | 36 +/- 2.8% | < 10 | < 10 |
| | o_o | 93 +/- 1.2% | < 10 | < 10 | 91 +/- 1.8% | < 10 | < 10 |
| with Slits | i_i | 14 +/- 3.1% | < 10 | < 10 | 13 +/- 3.3% | < 10 | < 10 |
| | i_o | 11 +/- 2.9% | < 10 | < 10 | 10 +/- 2.8% | < 10 | < 10 |
| | o_i | 5.3 +/- 4.2% | < 10 | < 10 | 5.5 +/- 4.5% | < 10 | < 10 |
| | o_o | 13 +/- 3.1% | < 10 | < 10 | 13 +/- 2.5% | < 10 | < 10 |

## 5. Summary and Conclusions

Based on the FLUKA simulations described in subsections of section 4 of this technical note, none of the cases studied resulted in radiation dose rates at the exterior of the FOE greater than 7 mrem/hr. In all cases, the highest dose rates are not from radiation penetrating the FOE walls from within the FOE, but penetrate the plug door in the ratchet wall upstream of the FOE. If we stand at the beginning of the side wall, (Z between 0 and 2 cm), and move laterally from the FOE, the dose rate starts at less than 5 mrem/hr and at 30 cm reaches 35 mrem/hr.

Several variations of the simulations were performed. One was to compare the dose rates with and without the FE slits and another was to perform the analyses with and without the tungsten GB collimator and GB stop. The results of radiation penetrating the FOE were similar for all of the cases, with having the slits usually resulting in lower dose rates and removing the GBC and GBS usually increasing the dose rates. However, all of the results were well within the 100mrem/hr specified in ref. 4.

The results of the calulations indicate the FOE shielding of 12ID-SMI fall within the shielding policy established in ref. 4. The beamline is equipped with an ARM at the ratchet wall plug door, which will turn off the electron beam in the event of a topoff accident when the dose rate exceeds 5 mrem/hr, which again is consistent with the shielding policy stated in ref. 4.

## 6. References

[1] Top-Off Safety Analysis and Requirement of Hazard Mitigation for NSLS-II Facility, PS-RASD-RPT-DRV-001, 2014.

[2] PS-C-ASD-PRC-183, Approval of New and Modified NSLS-II Beamline Front Ends for Top Off Safety, Jan 14, 2015.

[3] Z. Xia and Y. Li, Top-Off Safety Analysis for ISR, ISS and SMI Beamlines, PS-C-ASD-TOS-RPT-003, Aug. 17, 2015.

[4] Photon Sciences Shielding Policy, PS-C-ASD-POL-005, March 26, 2014.

**Appendix 1**
**12-ID (SMI) Beamline**
**Input provided Chris Amundsen**
**Note: the beam direction shown in the drawing of slit 3 is pointing in the incorrect direction. It should point from left to right.**

## Co-ordinate system

For non-canted beamlines the z axis lies along the long or short straight centerline. The positions (z co-ordinates) of the various components are defined with respect to the center of the straight. The SS centerline was used as the z or beamline axis for the FLUKA models. Y is the vertical axis and x the horizontal axis orthogonal to the y and z axes. The FE slits were not included in this table due to their complexity, their models were built according to design drawings, shown below.

**Table 1.1 Front End**

| **Front End** Component | Z location (m) (Distance from Source Point) (U), (D) or center (C) | Dimensions | | Offset (vertical or horizontal) From beam centerline | Material | Associated Drawings |
|---|---|---|---|---|---|---|
| | | Outer dimensions (W),(H),(L) | Collimator or Mask Apertures, mm (W)x(H) or (R) | | | |

| | | | | | | |
|---|---|---|---|---|---|---|
| Fixed Mask FM | 18766.85 mm (U) | 114.30 mm(W) x 95.25 mm (H) x 374.65 mm (L) | Inboard US: 35.40 (W) x 37.17mm mm (H)<br>Cen to Cen: 20.26 horz x 18.59 vert<br><br>Inboard DS 9.65mm (W) x 6.94 mm (H)<br>Cen to Cen: 20.29 horz x 3.26 vert<br><br>Inboard angle 2.22 degrees<br><br>Outboard US 36.00 (W) x 37.17mm (H)<br>Cen to Cen: 20.00 horz x 18.59 vert<br><br>Outboard DS 11.29mm (W) x 6.94 mm (H)<br>Cen to Cen: 20.78 horz x 3.26 vert<br><br>Outboard angle 2.00 degrees | 10.71 mm horiz | Glidcop Al-15 | SR-FE-MSK-3406 |
| Lead collimator LC01 | 19390.10 mm (U) | 457.20 mm (H) x 127.00 mm (V) x 304.80 (L) | 73.29 mm (W) x 24.94 mm (H) | 10.82 mm horiz | Lead | SR-FE-CO-3420 |
| Photon Shutter PSH | 22754.73 mm (U) | 107.95 mm (W) x 82.55 (H) x 254.00 (L) | Upstream 66.68 mm (W) x 37.46 mm (H)<br><br>Downstream 66.68 mm (W) x 22.70 mm (H)<br><br>Angle 3.50 degrees | 12.76 mm horiz<br><br>Cen of downstream vert aperture is centered on beam in open position.<br><br>Cen of downstream vert aperture is -19.05 mm in closed position | Glidcop Al-15 | SR-FE-PSH-2701 |
| Lead collimator | 23533.78 mm (U) | 457.20mm (W) x 127.00mm | 83.88 mm (W) x 27.24 (H) | 13.13 mm horiz | Lead | SR-FE-CO-3400 |

| | | | | | | |
|---|---|---|---|---|---|---|
| LC02 | | (H) x 304.80mm (L) | | | | |
| Safety Shutter SS1 | 24114.23 mm (U) | 165.10mm(W) x 123.83 (H) x 304.80mm(L) | Stainless steel tube aperture 94.00 mm (W) x 34.00 mm (H) | 13.45 mm horiz<br><br>Cen of vert aperture is centered on beam in open position.<br><br>Cen of vert aperture is -83.0 mm in closed position | Lead | SR-FE-SS-4000 |
| Safety Shutter SS2 | 24688.72 mm (U) | 165.10mm(W) x 123.83 (H) x 304.80mm(L) | Stainless steel tube aperture 94.00 mm (W) x 34.00 mm (H) | 13.77 mm horiz<br><br>Cen of vert aperture is centered on beam in open position.<br><br>Cen of vert aperture is -83.0 mm in closed position | Lead | SR-FE-SS-4100 |
| Lead in Ratchet wall RCO | 25269.16 mm (U) | 1397.00mm (W)x 508.00mm(H) x 254.00mm | 106.00(W) x 46.00 mm(H) | 14.10 mm horiz | Lead | SR-FE-RCO-0500 |
| Lead block RC1 | 25523.16 mm (U) | 406.40mm(W) x 203.20mm(H) x 50.80mm(L) | 106.00(W) x 46.00 mm(H) | 14.10 mm | Lead | SR-FE-RCO-0500 |
| Poly Block RC2 | 25624.77 mm(U) | 406.40 mm(W) x 203.20 mm(H) x 101.32 mm(L) | 106.00(W) x 46.00 mm(H) | 14.10 mm | HDPE | SR-FE-RCO-0500 |
| Concrete block | 25726.37 mm (U) | 317.50mm (W) x 139.70mm (H) x 387.35mm (L) | 106.00(W) x 46.00 mm(H) | 14.10 mm | Concrete | SR-FE-RCO-3410 |
| Lead block RCO | 26417.76 mm (U) | 278.38mm (W) x158.75mm (H) x 304.80mm(L) | 95.29 mm (W) x 31.09mm (H) | 14.10 mm | Lead | SR-FE-RCO-3410 |

NOTES:

1. Frontend has a Horizontal angular offset of .032 degrees with the center of the straight section used as the point of rotation and the Front end rotated to the outboard direction.

2. Aperture dimensions include manufacturing and position tolerance

**Table 2. Beamline Transport Pipes**

| **Component** | **Location (mm)** | **Apertures or dimensions (mm)** | **Material** |
|---|---|---|---|
| Fixed Shielded Beam Pipe A | U/S penetration center (12-ID-A):<br>X= -72.6, Y= 29.4, Z= 42500<br>D/S penetration center (12-ID-B):<br>X= -96.9, Y= 29.4, Z= 46000 | Inner Diameter: 68 | Shielding: 5 mm Lead<br>+ 2mm steel tubing |
| Guillotine, 12-ID-A D/S Wall | Stack of movable lead sheets:<br>Top edge: Y= 400.4<br>Bottom edge: Y= -399.6<br>I/B edge: X= -384<br>O/B edge: X= 456<br>Penetration location:<br>I/B: X= -72.6, Y= 29.4, Z= 42500<br>O/B: X= 143.1, Y= 29.4 (plug)<br>Penetration diameter: 68 | Thickness: 100.<br><br>Note:<br>Holes in fixed walls of the hutch:<br>I/B: X= -76.9, Y= 38<br>O/B: X=138.8, Y= 35<br>Diameter: 178 (both) | Material: Lead |
| Fixed Shielded Beam Pipe B | U/S penetration (12-ID-B-1):<br>X= -110.4, Y= 29.4, Z= 47950<br>D/S penetration (shield box):<br>X= -114.0, Y= 29.4, Z= 48477 | Inner Diameter: 68 | Shielding: 5 mm Lead<br>+ 2mm steel tubing |
| Removable Shielded Beam Pipe | U/S penetration (shield box):<br>X= -114.0, Y= 29.4, Z= 48477<br>D/S penetration (shield box):<br>X= -146.7, Y= 29.4, Z= 53199 | Inner Diameter: 68 | Shielding: 5 mm Lead<br>+ 2mm steel tubing |
| Fixed Shielded Beam Pipe C | U/S penetration (shield box):<br>X= -146.7, Y= 29.4, Z= 53199<br>D/S penetration (shield box):<br>X= -152.3, Y= 29.4, Z= 54000 | Inner Diameter: 68 | Shielding: 5 mm Lead<br>+ 2mm steel tubing |

**Table 1.3 SMI Beamline Components and SGB shields. Specify U (upstream), D (downstream) or C (center) of component**

| **Component** | **Location Z** | **Dimensions** | **X,Y Location** | **Material** | **Associated** |
|---|---|---|---|---|---|

| | of Upstream Face (mm) | Outer dimensions (W)×(H)×(L)(mm) | Aperture (W)x(H) or (Diameter) (mm) | (mm) | | Drawings |
|---|---|---|---|---|---|---|
| (1) Dual Aperture Fixed Mask | 27406 | Cylinder w/ axis along Z:<br><br>Dia. 127<br>Length 188 | Two tapered apertures, asymmetric.<br><br>Size U/S:<br>I/B: 21.8(X)× 17.8(Y)<br>O/B: 23.8(X)× 19.0(Y)<br><br>Size D/S:<br>I/B: 2.7(X)× 2.7(Y)<br>O/B: 3.2(X)× 3.1(Y) | Block center:<br>X= 13.9, Y= 0<br><br>I/B aperture center loc U/S:<br>X= -14.9, Y= 0<br>O/B aperture center loc U/S:<br>X= 42.7, Y= 0<br><br>I/B aperture center loc D/S:<br>X= -15.1, Y= 0<br>O/B aperture center loc D/S:<br>X= 43, Y= 0 | CuCrZr (Copper) | PD-SMI-BL-LAY-1011,<br><br>PD-SMI-BL-LAY-1015.<br><br>Apertures from presurvey report |
| (2) Bremsstrahlung Collimator | 28248 | 177.50mm (X)<br>× 90mm (Y)<br>× 206mm (Z) | Two rectangular apertures<br><br>I/B: 10mm(X) × 10mm(Y)<br>O/B: 10mm(X) × 10mm(Y) | Block center:<br>X= 25.5, Y= 0<br>I/B aperture center loc:<br>X= -15.4 , Y= 0<br>O/B aperture center loc:<br>X= 43.9, Y= 0 | Tungsten | PD-SMI-BL-LAY-1012,<br><br>PD-SMI-BL-LAY-1016<br><br>Apertures checked by survey |
| (3a) White Beam Slit (H,I/B) | 28953 | Model blade as 25mm(X) × 50mm(Y) × 80mm(Z) | n/a | Block center:<br>X= -15.4, Y= 0 | Glidcop (Copper) | See details below |
| (3b) White Beam Slit (H, O/B) | 29018 | Model blade as 25mm(X) × 50mm(Y) × 80mm(Z) | n/a | Block center:<br>X= -15.4, Y= 0 | Glidcop (Copper) | See details below |
| (3c) White Beam Slit (V, top) | 29213 | Model blade as 50mm(X) × 25mm(Y) × 80mm(Z) | n/a | Block center:<br>X= -15.4, Y= 0 | Glidcop (Copper) | See details below |
| (3d) White Beam Slit (V, bot) | 29153 | Model blade as 50mm(X) × 25mm(Y) × 80mm(Z) | n/a | Block center:<br>X= -15.4, Y= 0 | Glidcop (Copper) | See details below |

| | | | | | | |
|---|---|---|---|---|---|---|
| (4)<br>Pinhole Aperture | 30068 | Cylinder w/ axis along Z:<br><br>Dia. 101.6<br>Length 35 | Apertures not to be modeled. | Block center:<br>X= 14.8, Y= 0 | Glidcop (Copper) | See details below |
| (5)<br>SGB Shield 1 | 30212 | see description below | 130mm (Dia.) | Aperture and lead square center:<br>X= 14.9, Y= 0 | lead | PD-SMI-BL-0203, PD-SMI-BL-LAY-1020 |
| (6)<br>DCM crystal | 31991 | 20mm(X) × 50mm(Y) × 48mm(Z) | n/a | Block center:<br>X= -19, Y= -25 | silicon, sand-wiched between Cu plates | See details below |
| (7)<br>SGB shield 2 | 32596 | see description of (5) | 130mm (Dia.) | Aperture and lead square center:<br>X= 15.7, Y= 12.5 | lead | PD-SMI-BL-0204, PD-SMI-BL-LAY-1020 |
| (8)<br>White Beam Stop | 32822 | 120mm (X)<br>× 40mm (Y)<br>× 130mm (Z) | n/a | Center of rectangular block to model:<br>X= 15.9, Y= 9 | Glidcop (Copper) | PD-SMI-BL-LAY-1019, PD-SMI-BL-LAY-1013 |
| (9)<br>GB Stop | 33268 | 177.5 (X)<br>× 78 (Y)<br>× 206 (Z) | Two rectangular apertures<br><br>I/B: 10mm(X) × 6mm(Y)<br>O/B: 10mm(X) × 6mm(Y) | Block center:<br>X= 28.2, Y= 3<br>I/B aperture center:<br>X= -18.6, Y= 25<br>O/B aperture center:<br>X= 50.6, Y= 25 | Tungsten | PD-SMI-BL-LAY-1019,<br><br>PD-SMI-BL-LAY-1013 |
| (10)<br>Photon Shutter | 41779 | NSLS-II standard mono beam shutter | One of the 4 Tungsten blocks: 125(X) × 150(Y) × 38 (Z) | Aperture:<br>40(X) × 25(Y)<br>Block center:<br>X= -67.6,<br>Y= 29.4 | Tungsten | per spec, as-built, and instal-lation |
| (11)<br>Guillotine | 42450 | 840(X)× 800 (Y) × 50 (Z) | See description below | Block center:<br>X= 36,<br>Y= -12 | Lead | per spec, as-built, and instal-lation |

| | | | | | | |
|---|---|---|---|---|---|---|
| Downstream wall, directly adjacent to guillotine | 42500 | See line (4) Table 1 | Outboard Penetration: 178 (Dia.) Plug in o/b penetration: 165 (Dia.) Thickness 50 (Z) | O/B Penetration location: X= 130, Y= 29.4 Plug location: X= 130, Y= 17 | Lead | per spec, as-built, and instal-lation |

**Figure 1. Dual Aperture Fixed Mask**

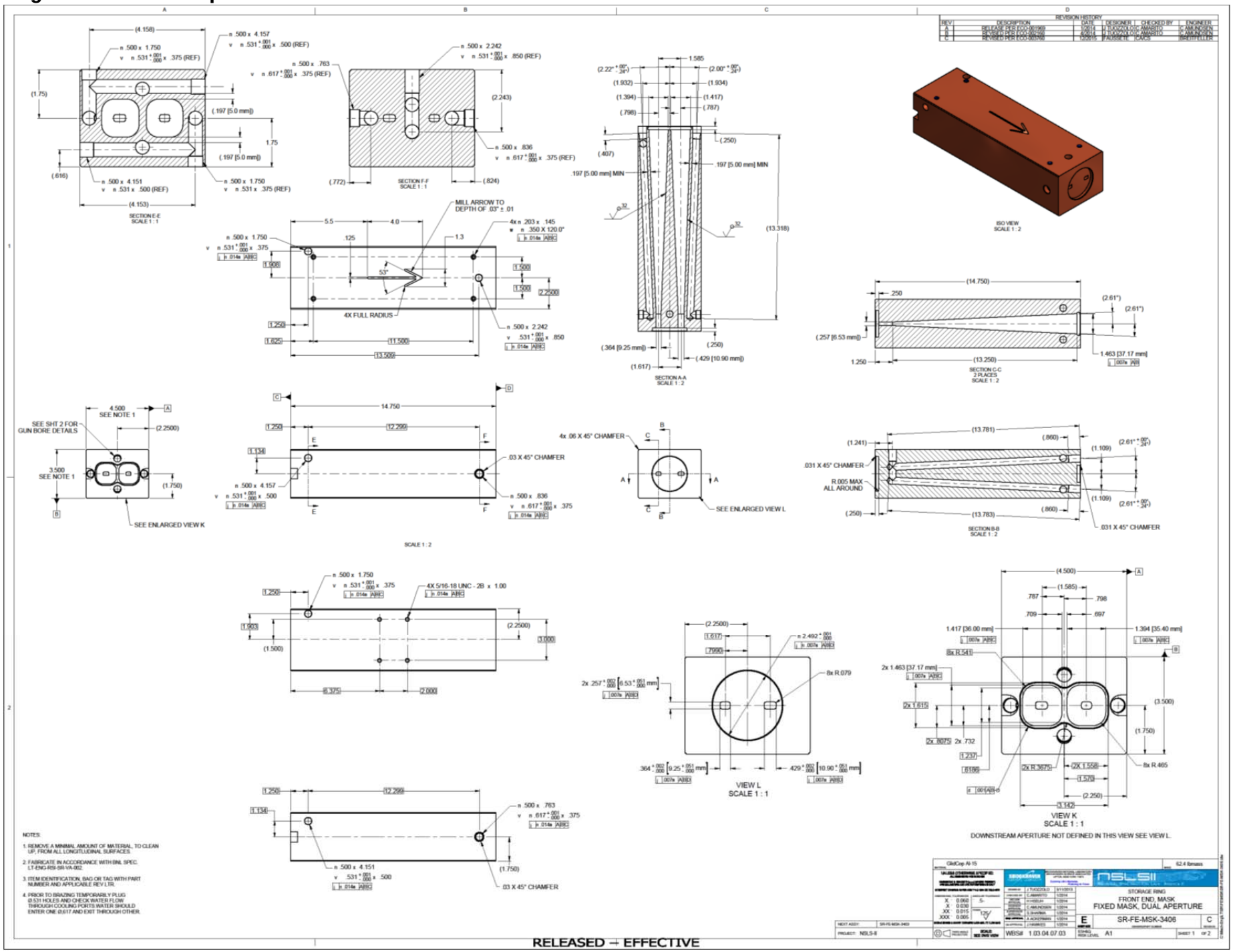

**Figure 2. FE Slit1**

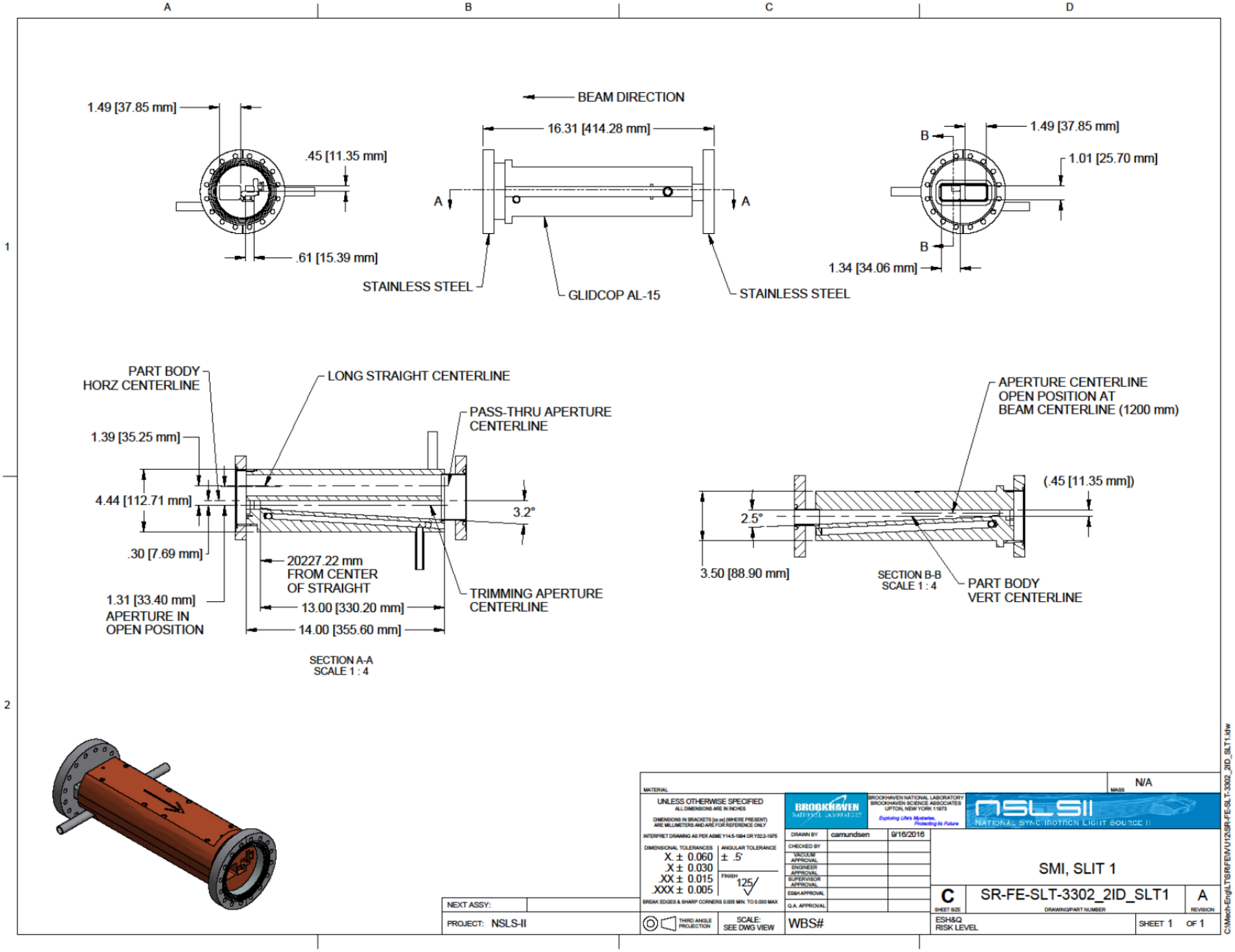

**Figure 3. FE Slit2**

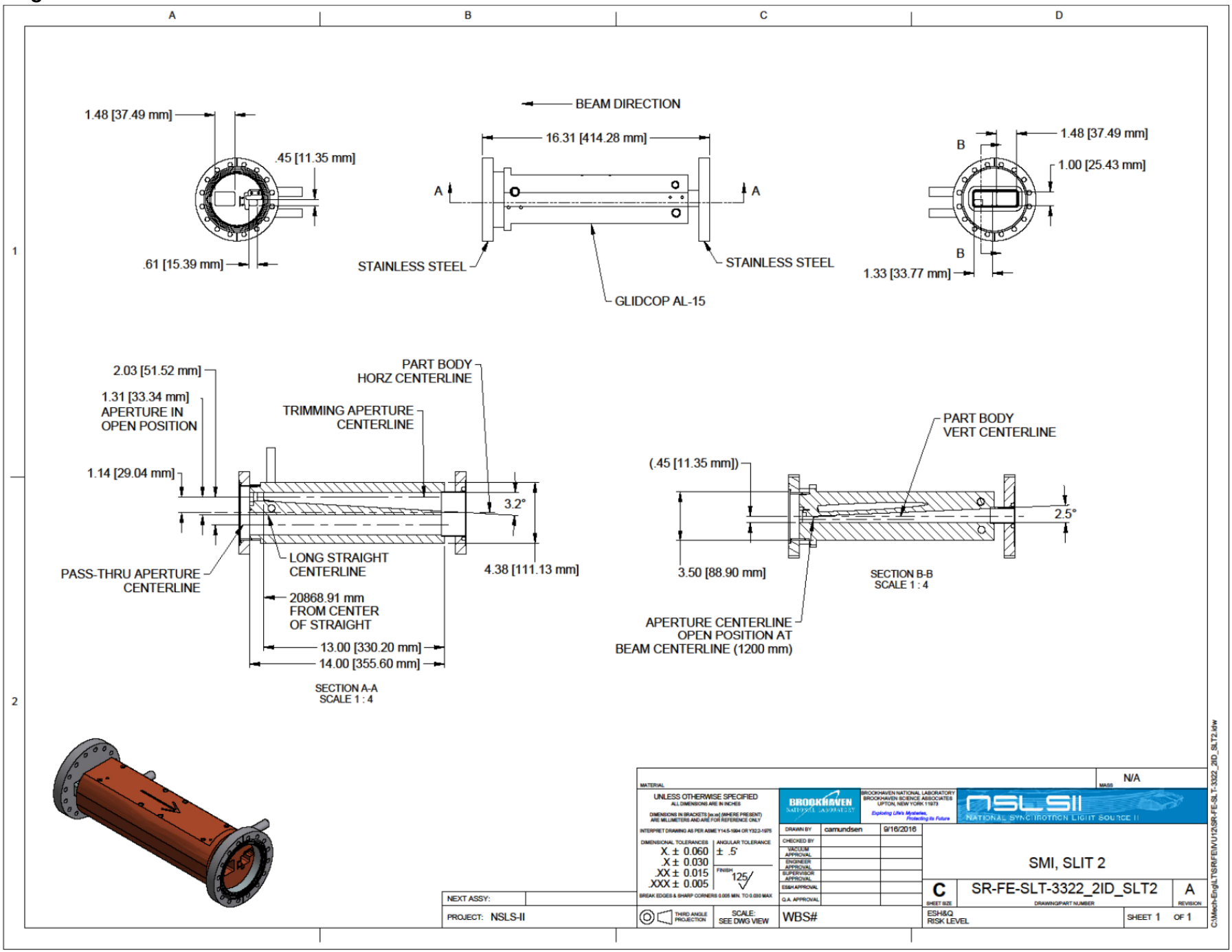

**Figure 4. FE Slit3**

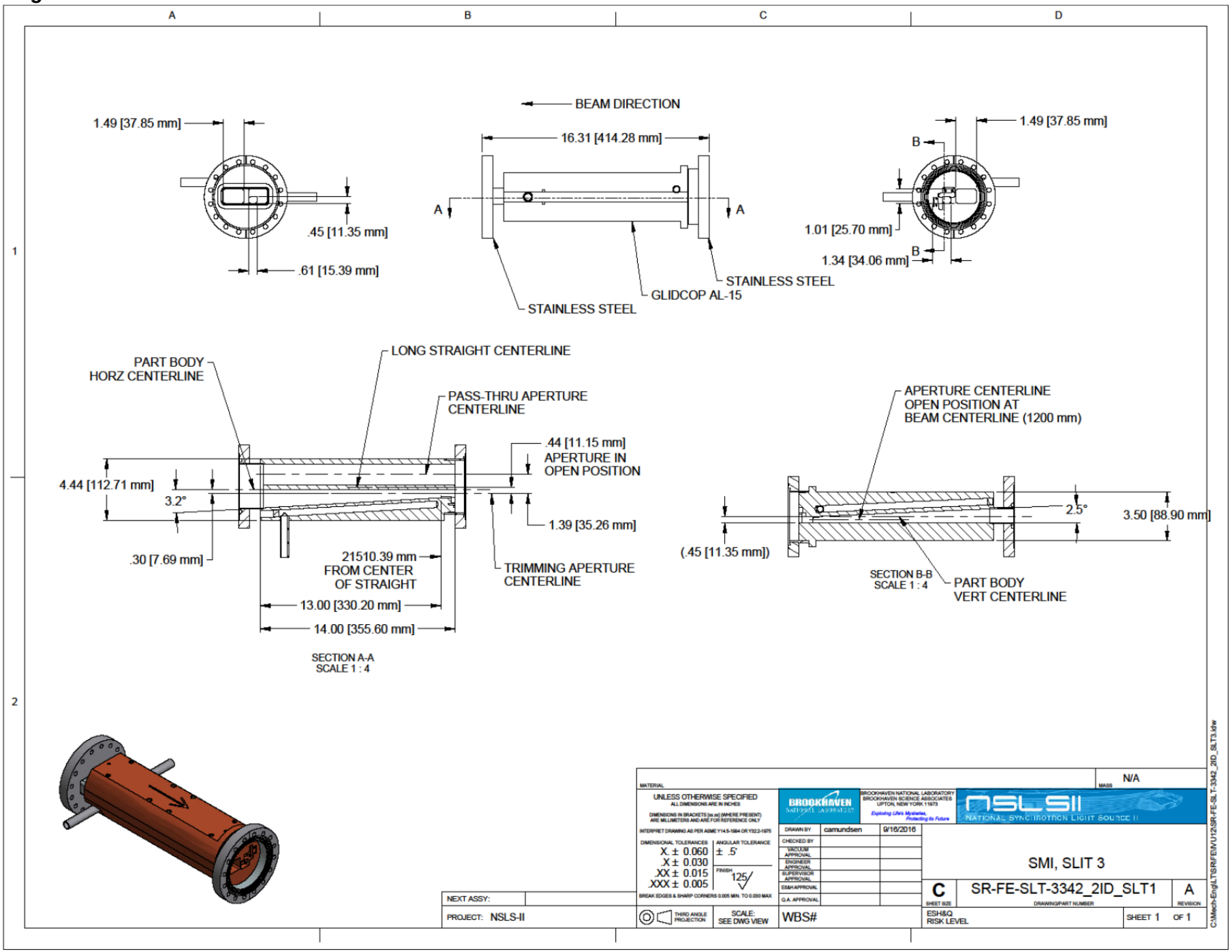
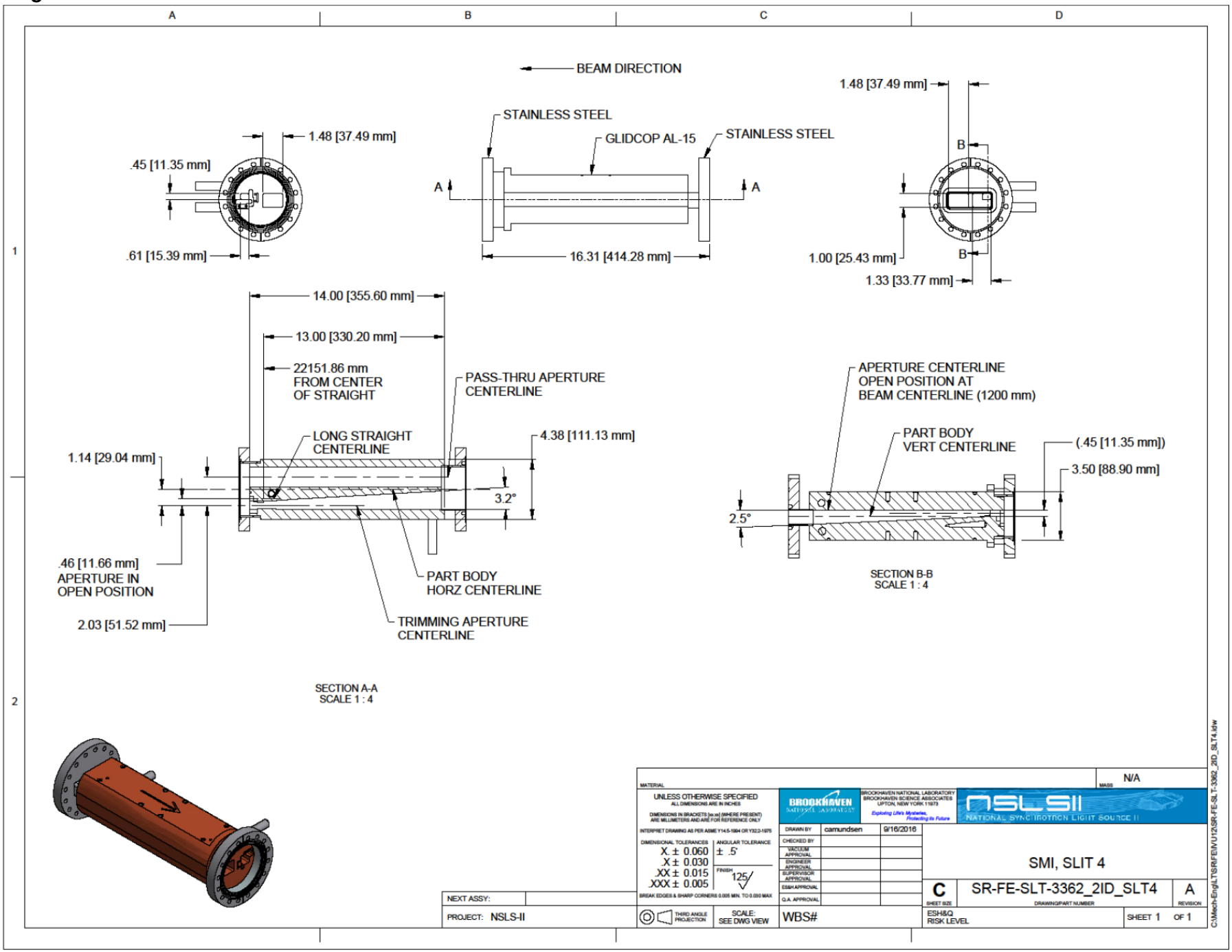
**Figure 5. FE Slit4**