REVISION HISTORY					
REV	DESCRIPTION	DATE	DESIGNER	CHECKED BY	ENGINEER
A	RELEASE PER ECO-004105	4/2016	J TUOZZOLO	CA/CS	C.AMUNDSEN
B	REVISED PER ECO-004443	8/2016	R GAMBELLA	CA/CS	C.AMUNDSEN

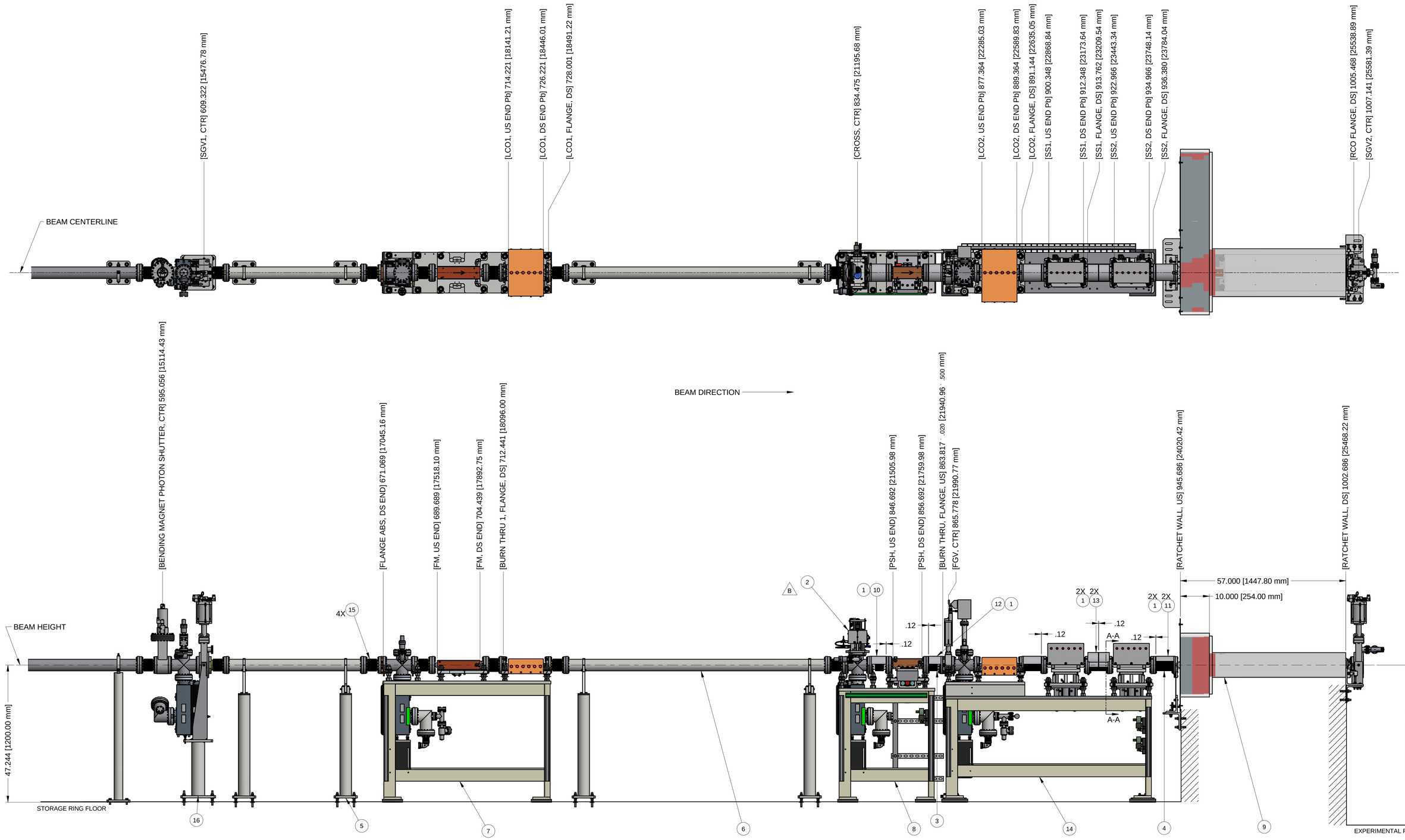

COMPONENT	RADIATION SAFETY COMPONENT CHECKLIST	TOP OFF SAFETY SYSTEM
EXIT ABSORBER	X	X
FIXED MASK	X	X
BURN THRU FLANGE, LCO1	X	
LEAD COLLIMATOR 1	X	
BURN THRU FLANGE, LCO2	X	
LEAD COLLIMATOR 2	X	X
SAFETY SHUTTER 1	X	
SAFETY SHUTTER 2	X	
RATCHET WALL COLLIMATOR	X	

TOP OFF SAFETY CREDITED COMPONENT OR ASSEMBLY.
ANY CHANGES TO THIS DRAWING REQUIRES APPROVAL
OF THE TECHNICAL AUTHORITY FOR TOP OFF SAFETY.

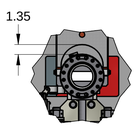

SECTION A-A
SCALE 1 : 8

NOTES:

1. ALL ORDINATE DIMENSIONS ARE FROM MID-PONT OF INSERTION STRAIGHT.
2. SEE SHEET 2 AND 3 FOR SURVEY AND ALIGNMENT DIMENSIONS.
3. COMPONENT POSITION TOLERANCE OF ` .008 [.200] IN X AND Y DIRECTION AND ` .020 [.500] IN Z DIRECTION (BEAM DIRECTION) UNLESS OTHERWISE NOTED.
4. REFERENCE WATER FLOW DIAGRAM SR-FE-UT-0002, -0003.
5. REFERENCE AIR SCHEMATIC SR-FE-UT-0001.

ITEM	QTY	PART NUMBER	DESCRIPTION	MATERIAL
16	1	SR-VA-CHM-3230	EXIT CHM SUBASSY, S3 (38mm X 25mm)	
15	4	SR-VA-BLW-0003	BELLOWS, WELD, 6.00 CF X 6.00 NOM LENGTH	
14	1	SR-FE-SS-3800	SAFETY SHUTTER, ASSY, SRX BEAMLINE	
13	2	SR-FE-SHLD-0002	BELLOWS SHIELD, 3.63" LONG	Aluminum, CORRUGATED
12	1	SR-FE-SHLD-0001-08	BELLOWS SHIELD, 4.70 lg.	Aluminum, CORRUGATED
11	2	SR-FE-SHLD-0001-07	BELLOWS SHIELD, 6.50 lg.	Aluminum, CORRUGATED
10	1	SR-FE-SHLD-0001-06	BELLOWS SHIELD, 5.50 lg	Aluminum, CORRUGATED
9	1	SR-FE-RCO-0700	PLUG SHIELD	
8	1	SR-FE-PSH-3300	PHOTON SHUTTER, ASSY, SRX BEAMLINE	
7	1	SR-FE-MSK-3900	FIXED MASK, ASSY, NYX BEAMLINE	
6	1	SR-FE-DRFT-1800	DRIFT PIPE, CANTED SHORT STRAIGHT ASSY	
5	1	SR-FE-DRFT-1300	DRIFT PIPE, CANTED SHORT STRAIGHT ASSY	
4	1	SR-FE-BLW-0039	WELDED, BELLOWS, 6" CF FLG	
3	1	SR-FE-BLW-0036	WELDED, BELLOWS, 6" CF FLG	
2	1	SR-DG-XRF-2000	ASSY, DUAL SCREEN X-RAY FLAG	
1	6	PI-CLMP-0056	Stainless Steel Worm-Drive hose clamp 4-1/8 to 7" clamp diameter range	STAINLESS STEEL TYPE 316L

PARTS LIST

19-ID BEAMLINE

UNLESS OTHERWISE SPECIFIED
ALL DIMENSIONS ARE IN INCHES
DIMENSIONS IN BRACKETS [xx.xx] (WHERE PRESENT) ARE MILLIMETERS AND ARE FOR REFERENCE ONLY
INTERPRET DRAWING AS PER ASME Y14.5-1994 OR Y32.2-1975

DIMENSIONAL TOLERANCES: X. ` 0.060; .X ` 0.030; .XX ` 0.015; .XXX ` 0.005
ANGULAR TOLERANCE: ` .5~
FINISH: 125
BREAK EDGES & SHARP CORNERS 0.005 MIN. TO 0.030 MAX

BROOKHAVEN NATIONAL LABORATORY
BROOKHAVEN NATIONAL LABORATORY
BROOKHAVEN SCIENCE ASSOCIATES
UPTON, NEW YORK 11973
Exploring Life's Mysteries, Protecting its Future
NSLS-II NATIONAL SYNCHROTRON LIGHT SOURCE II

DRAWN BY	DPULEO	3/16/2016
CHECKED BY	CA/CS	3/2016
VACUUM APPROVAL	C. HETZEL	3/2016
ENGINEER APPROVAL	C.AMUNDSEN	3/2016
SUPERVISOR APPROVAL	S SHARMA	3/2016
ESH&H APPROVAL	A ACKERMAN	3/2016
QA APPROVAL	J HAWKES	3/2016

STORAGE RING
FRONT END, IVU19
LAYOUT, NYX FRONT END

SHEET SIZE: E
SR-FE-IVU19-1000 (DRAWING/PART NUMBER)
REVISION: B

NEXT ASSY: FINAL
PROJECT: NSLS-II
THIRD ANGLE PROJECTION
SCALE: SEE DWG VIEW
WBS# 1.03.04.07.03
ESH&Q RISK LEVEL A-1
SHEET 1 OF 3

C:\Mech Eng\LT\SR\FE\IVU19\SR-FE-IVU19-1000.dwg

RELEASED + EFFECTIVE

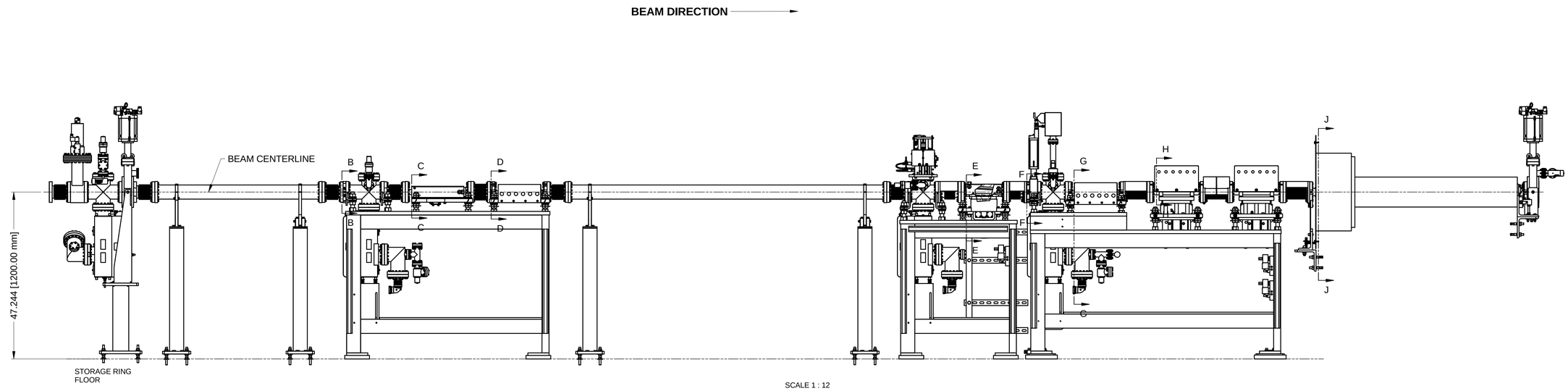

SCALE 1 : 12

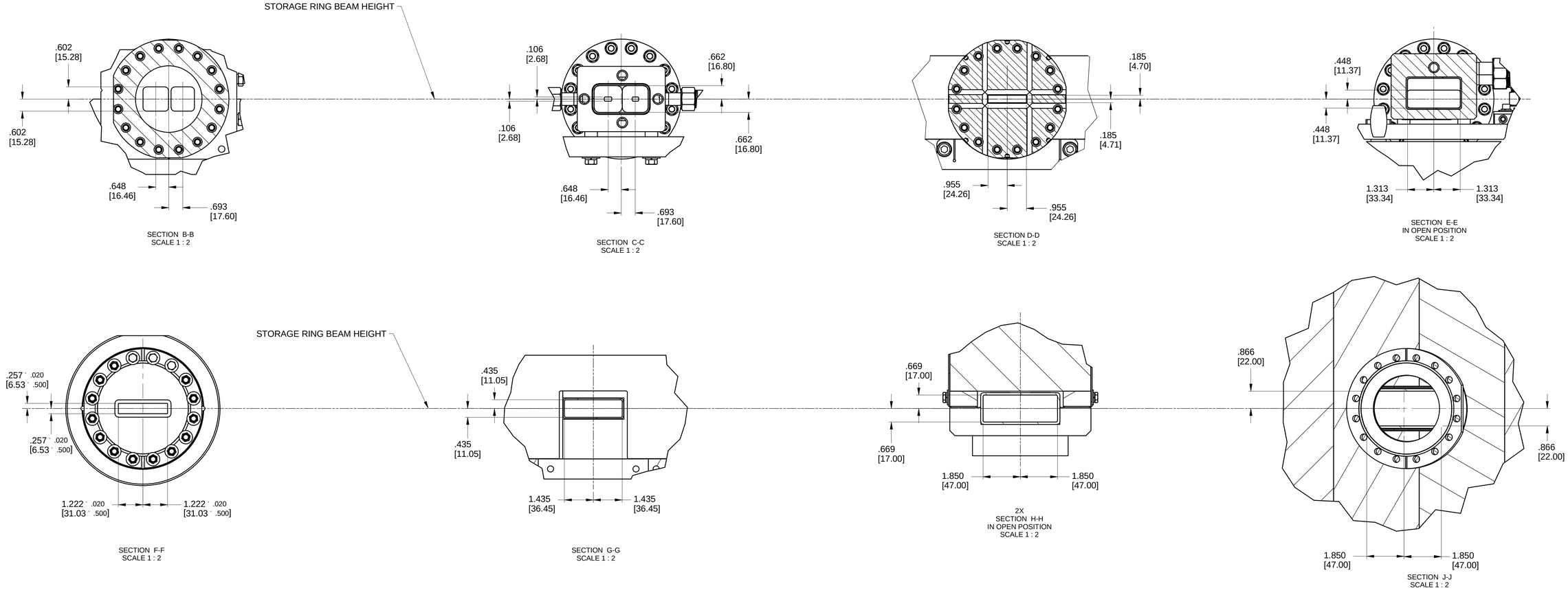

SECTION B-B
SCALE 1 : 2

SECTION C-C
SCALE 1 : 2

SECTION D-D
SCALE 1 : 2

SECTION E-E
IN OPEN POSITION
SCALE 1 : 2

SECTION F-F
SCALE 1 : 2

SECTION G-G
SCALE 1 : 2

2X
SECTION H-H
IN OPEN POSITION
SCALE 1 : 2

SECTION J-J
SCALE 1 : 2

E (SHEET SIZE)	SR-FE-IVU19-1000 (DRAWING/PART NUMBER)	B (REVISION)
ESH&Q RISK LEVEL A-1	SHEET 2 OF 3	

C:\Mech-Eng\LTSR\FE\IVU19\SR-FE-IVU19-1000.slw

RELEASED + EFFECTIVE

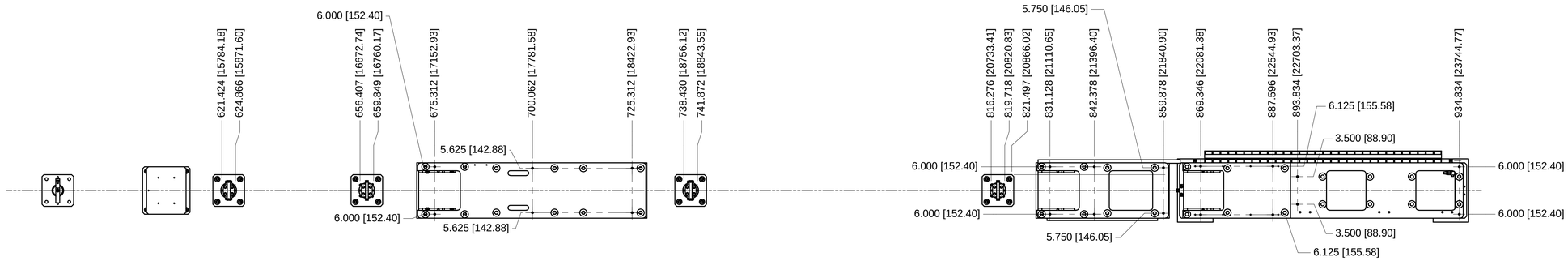

TABLE FIDUCIAL LOCATION
SCALE 1 : 12

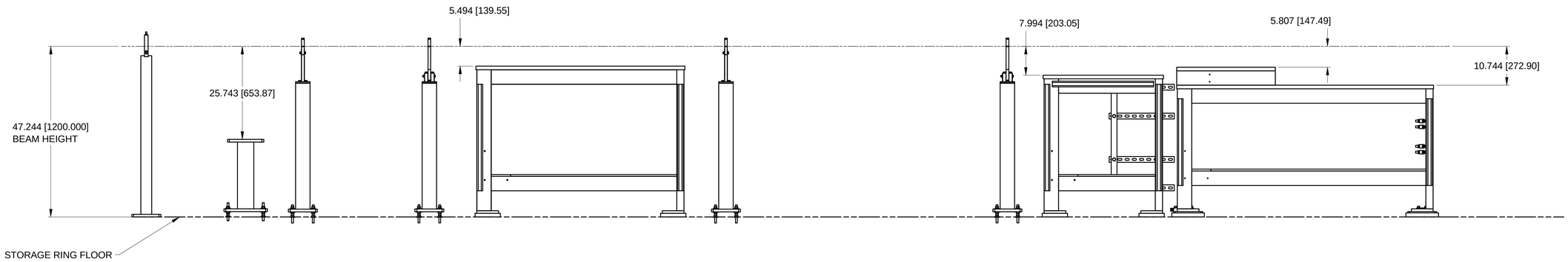

TABLE HEIGHT
SCALE 1 : 12

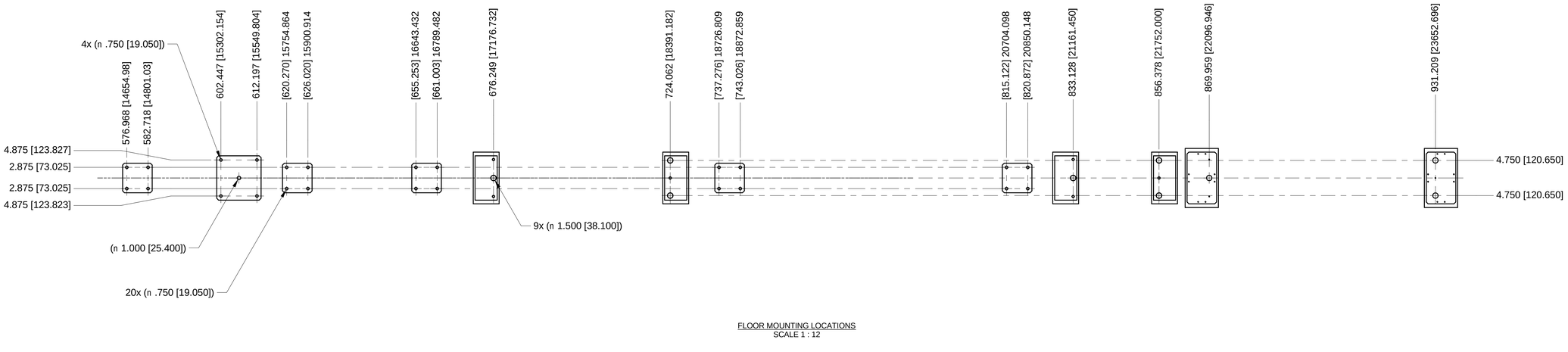

FLOOR MOUNTING LOCATIONS
SCALE 1 : 12

NOTES:

1. ALL ORDINATE DIMENSIONS ARE FROM MID POINT OF INSERTION STRAIGHT

2. FOR n 1.500[38.100] HOLES USE "3/4" DROP IN ANCHORS P/N PI-HDW-0021.

3. FOR n .750[19.050] HOLES USE "1/2" DROP IN ANCHORS P/N PI-HDW-0040.

E SHEET SIZE	SR-FE-IVU19-1000 DRAWING/PART NUMBER	B REVISION
ESH&Q RISK LEVEL A-1	SHEET 3 OF 3	

C:\Mech-Eng\LT\SR\FE\IVU19\SR-FE-IVU19-1000.dw

RELEASED + EFFECTIVE

REVISION HISTORY					
REV	DESCRIPTION	DATE	DESIGNER	CHECKED BY	ENGINEER
A	RELEASE PER ECO-003776	1/2016	L.REFFI	C AMARITO	C.AMUNDSEN
B	REVISED PER ECO-004450	8/2016	R.GAMBELLA	CA/CS	C.AMUNDSEN

NOTES:

1. ITEM IDENTIFICATION: METAL STAMP, SCRIBE OR ELECTRO-ETCH PART NO AND APPLICABLE REV LTR USING .25 HIGH CHARACTERS IN APPROX LOCATION SHOWN.
2. INSTALL SAFETY WIRES AFTER FINAL ALIGNMENT.
3. ALL VACUUM COMPONENTS MUST BE CLEANED, BAKED AND PACKAGED PER LT-ENG-RSI-SR-VA-002 PRIOR TO INSTALLATION.
4. INSTALL COVER PLATES W/ GASKETS (PI-FLG-0080).
5. RAISE PUMP SUPPORT TO ACCEPT FULL WEIGHT OF PUMP. CONFIRM A MINIMUM OF .25" ADDITIONAL SPRING TRAVEL.
6. AFTER FINAL ALIGNMENT, TORQUE SAFETY NUTS TO 300 FT-LB.
7. FLANGE REQUIREMENTS: THE TIGHTENING PROCESS MUST BE DONE GRADUALLY IN 1/4 TO 1/2 TURN INCREMENTS IN AN ALTERNATING CRISS-CROSS PATTERN UNTIL 15 FT-LB IS ACHIEVED ON 5/16-24 AND 12 FT-LB ON 1/4-28 HARDWARE.
8. USE NUT PLATES WHERE POSSIBLE (PI-NUT-0018, PI-NUT-0020)
9. FIELD FIT WATER LINES AFTER INSTALLATION.

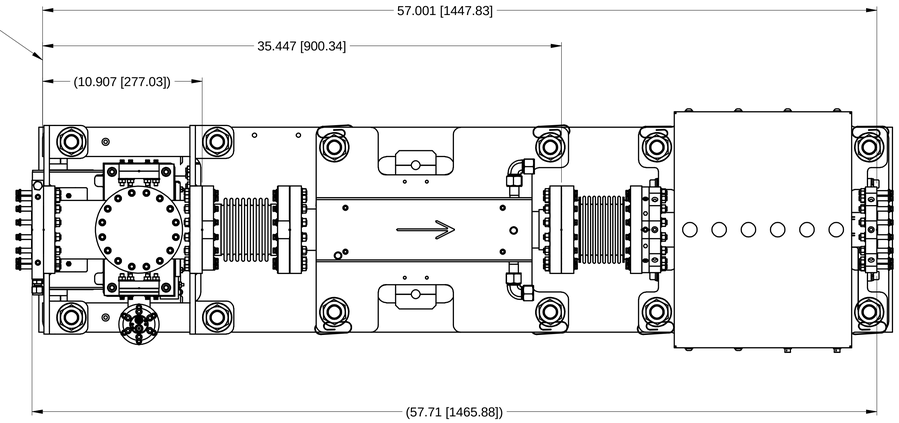

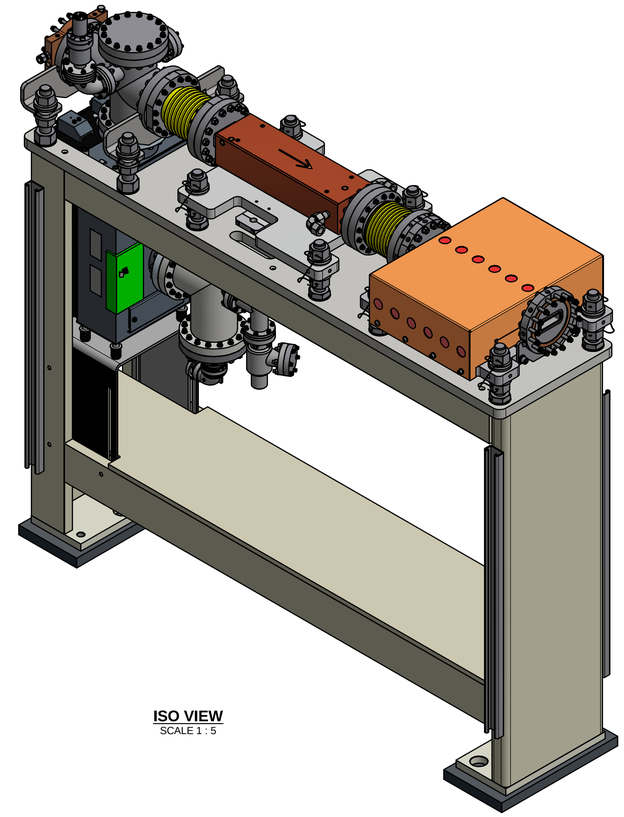

ISO VIEW
SCALE 1 : 5

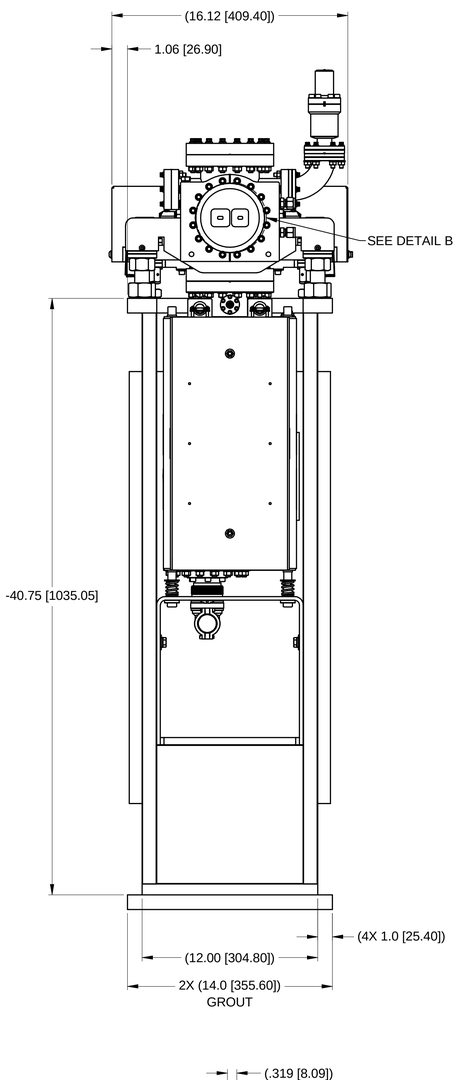

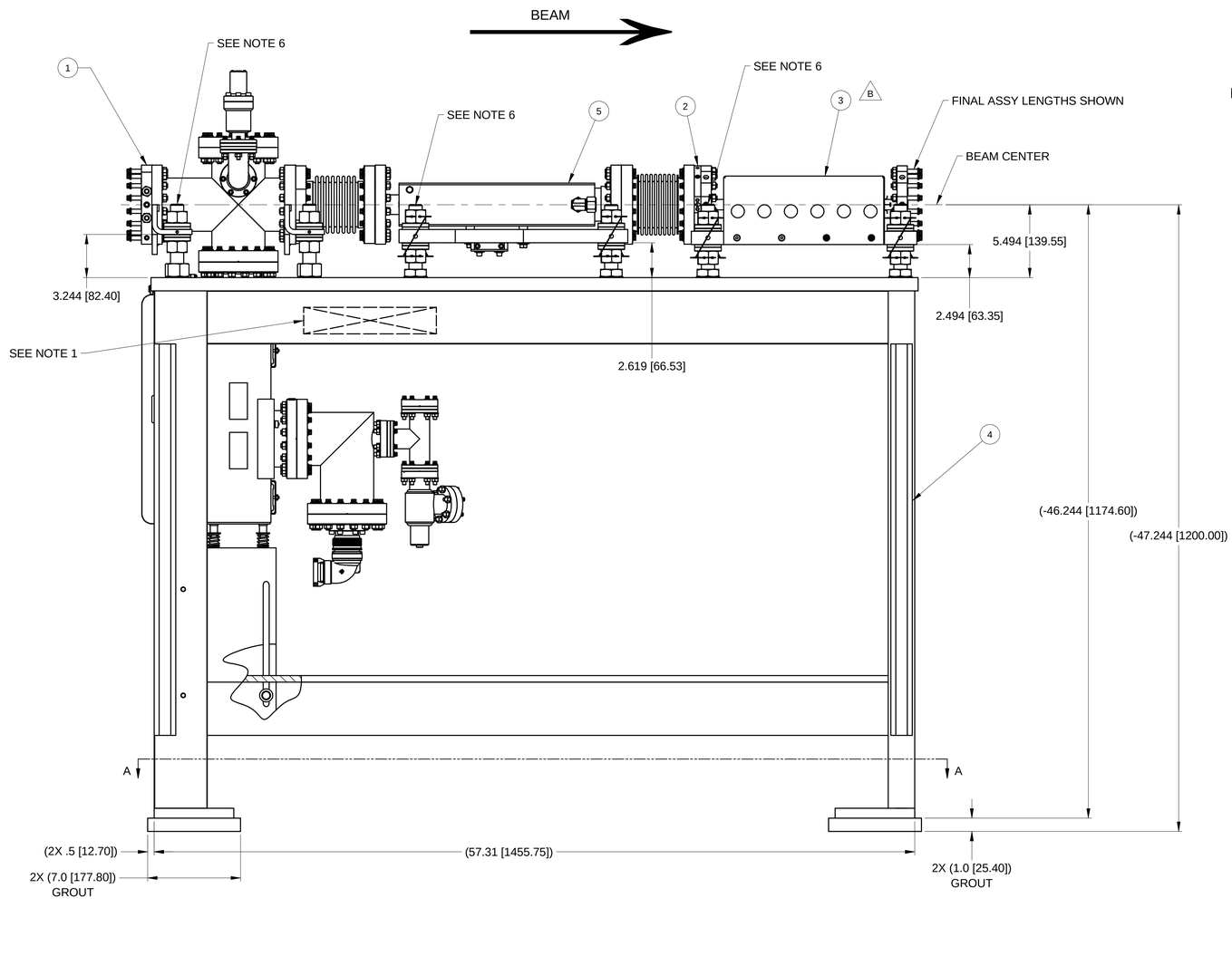

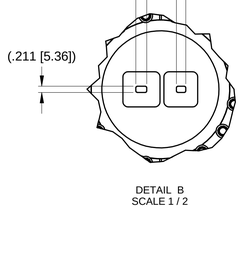

DETAIL B
SCALE 1 / 2

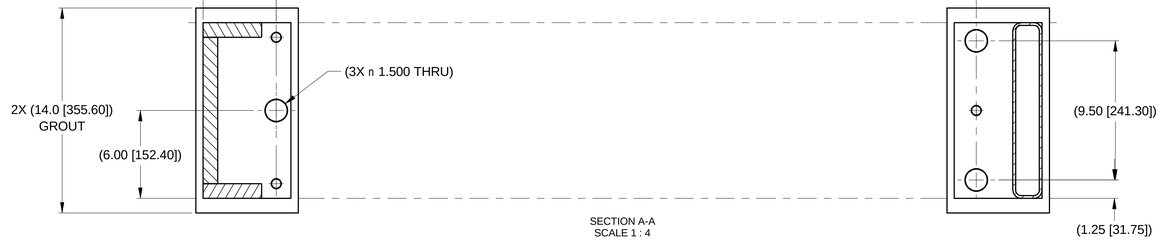

SECTION A-A
SCALE 1 : 4

ITEM	QTY	PART NUMBER	DESCRIPTION	MATERIAL
5	1	SR-FE-MSK-3901	MASK ASSY, DUAL FIXED APERTURE, NYX	
4	1	SR-FE-MSK-1000	FIXED MASK, ASSY COMMON	
3	1	SR-FE-CO-3820	COLLIMATOR, LEAD, LCO1, SST/NYX	
2	1	SR-FE-ABS-3820	FLANGE, BURN THRU, LCO1, MODIFIED	
1	1	SR-FE-ABS-3900	6" FLANGE ABSORBER, NYX	

PARTS LIST

UNLESS OTHERWISE SPECIFIED
ALL DIMENSIONS ARE IN INCHES
DIMENSIONS IN BRACKETS [xx.xx] (WHERE PRESENT) ARE MILLIMETERS AND ARE FOR REFERENCE ONLY
INTERPRET DRAWING AS PER ANSI Y14.5-1994 OR Y32.2-1975

DIMENSIONAL TOLERANCES: X. 0.060, .X 0.030, .XX 0.015, .XXX 0.005
ANGULAR TOLERANCE: ±.5°
Finish: 125
BREAK EDGES & SHARP CORNERS 0.005 MIN. TO 0.030 MAX

BROOKHAVEN NATIONAL LABORATORY
BROOKHAVEN NATIONAL LABORATORY
BROOKHAVEN SCIENCE ASSOCIATES
UPTON, NEW YORK 11973
Exploring Life's Mysteries, Protecting its Future

NSLSII NATIONAL SYNCHROTRON LIGHT SOURCE II

DRAWN BY	L.REFFI	1/7/2016
CHECKED BY	C.AMARITO	1/2016
VACUUM APPROVAL	C.HETZEL	1/2016
ENGINEER APPROVAL	C.AMUNDSEN	1/2016
SUPERVISOR APPROVAL	S.SHARMA	1/2016
ESH APPROVAL	A.ACKERMAN	1/2016
QA APPROVAL	J.HAWKES	1/2016

STORAGE RING
FRONT END, MASK
FIXED MASK, ASSY, NYX BEAMLINE

SHEET SIZE: E
DRAWING/PART NUMBER: SR-FE-MSK-3900
REVISION: B

NEXT ASSY: SR-FE-IVU19-1000
PROJECT: NSLS2
THIRD ANGLE PROJECTION
SCALE: SEE DWG VIEW
WBS# 7.04.05.01
ESH&Q RISK LEVEL: A1
SHEET 1 OF 1

C:\Mech-Eng\LTS\SR\FE\MSK\SR-FE-MSK-3900.dw

RELEASED + EFFECTIVE

REVISION HISTORY					
REV	DESCRIPTION	DATE	DESIGNER	CHECKED BY	ENGINEER
A	RELEASE PER ECO-002179	4/2014	J TUOZZOLO	C.AMARITO	C.AMUNDSEN

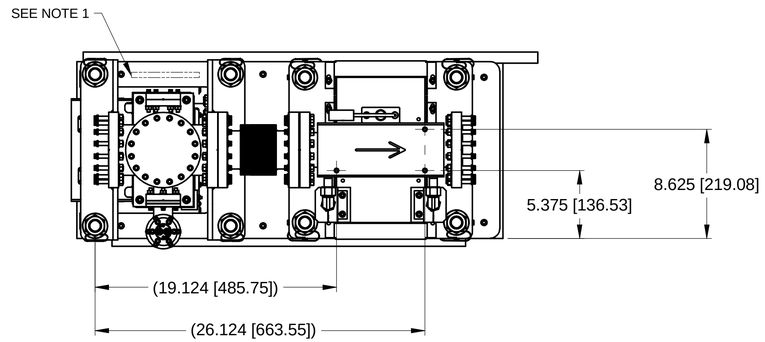

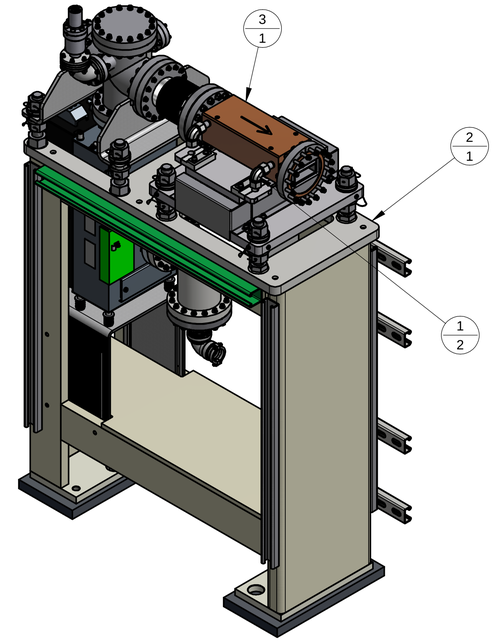

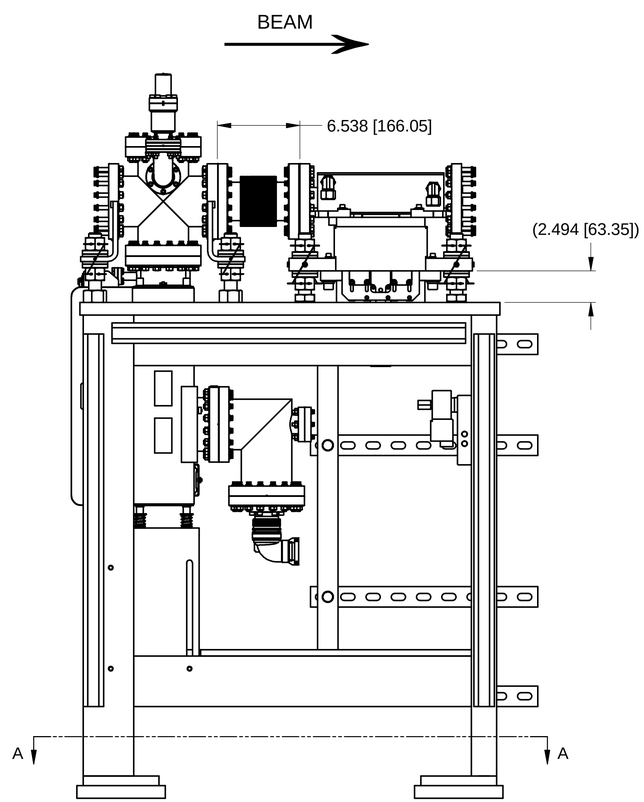

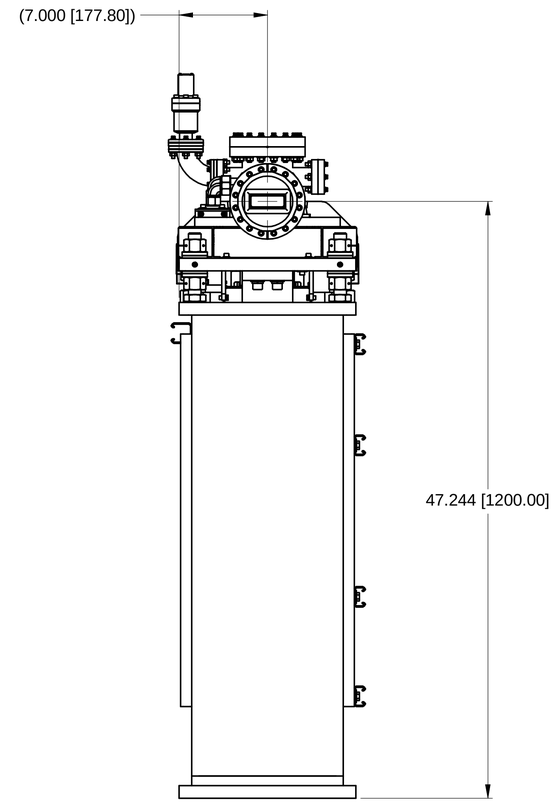

NOTES:

1. ITEM IDENTIFICATION: METAL STAMP, SCRIBE OR ELECTRO-ETCH PART NO AND APPLICABLE REV LTR USING .25 HIGH CHARACTERS IN APPROX LOCATION SHOWN.
2. RAISE PUMP SUPPORT TO ACCEPT FULL WEIGHT OF PUMP. CONFIRM A MINIMUM OF .25" ADDITIONAL SPRING TRAVEL.
3. ALL VACUUM COMPONENTS MUST BE CLEANED AND BAKED PRIOR TO ASSY PER. LT-ENG-RSI-SR-VA-002.
4. VACUUM TEST PRIOR TO INSTALLATION PER. LT-ENG-RSI-SR-VA-002.
5. INSTALL COVER PLATES W/ GASKETS (PI-FLG-0080).
6. AFTER FINAL ALIGNMENT, TORQUE SAFETY NUTS TO 300 FT-LB.
7. INSTALL SAFETY WIRE AFTER FINAL SURVEY.
8. USE NUT PLATES WHERE POSSIBLE (PI-NUT-0018), (PI-NUT-0020).
9. FIELD FIT AND VERIFY WATER LINES AFTER INSTALLATION.
10. FLANGE REQUIREMENTS: THE TIGHTENING PROCESS MUST BE DONE GRADUALLY IN 1/4 TO 1/2 TURN INCREMENTS IN AN ALTERNATING CRISS-CROSS PATTERN UNTIL 15 FT-LB IS ACHIEVED ON 5/16-24 AND 12 FT-LB ON 1/4-28 HARDWARE.

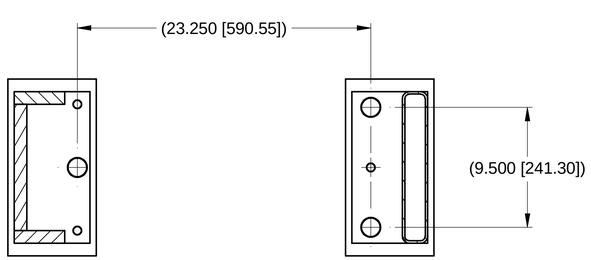

SECTION A-A
SCALE 1:6

ITEM	QTY	PART NUMBER	DESCRIPTION	MATERIAL
3	1	SR-FE-PSH-2701	PHOTON SHUTTER, WELDMENT, SRX	
2	1	SR-FE-PSH-1000	PHOTON SHUTTER ASSY, COMMON	
1	2	PI-FTNGS-0021	ELBOW, COMP .62 X .62	

PARTS LIST

UNLESS OTHERWISE SPECIFIED
ALL DIMENSIONS ARE IN INCHES
DIMENSIONS IN BRACKETS [xx.xx] (WHERE PRESENT) ARE MILLIMETERS AND ARE FOR REFERENCE ONLY
INTERPRET DRAWING AS PER ANSI Y14.5-1994 OR Y32.2-1975

DIMENSIONAL TOLERANCES: X. ` 0.060; .X ` 0.030; .XX ` 0.015; .XXX ` 0.005
ANGULAR TOLERANCE: ` .5~
FINISH: 125
BREAK EDGES & SHARP CORNERS 0.005 MIN. TO 0.030 MAX

BROOKHAVEN NATIONAL LABORATORY
BROOKHAVEN NATIONAL LABORATORY
BROOKHAVEN SCIENCE ASSOCIATES
UPTON, NEW YORK 11973
Exploring Life's Mysteries, Protecting its Future
NSLSII NATIONAL SYNCHROTRON LIGHT SOURCE II

DRAWN BY	C.AMUNDSEN	4/3/2014
CHECKED BY	C.AMARITO	4/2014
VACUUM APPROVAL	D.HSEUH	4/2014
ENGINEER APPROVAL	C.AMUNDSEN	4/2014
SUPERVISOR APPROVAL	S.SHARMA	4/2014
ES&H APPROVAL	A ACKERMAN	4/2014
QA APPROVAL	J HAWKES	4/2014

STORAGE RING
FRONT END, PHOTON SHUTTER
PHOTON SHUTTER ASSEMBLY, IVU

D — SHEET SIZE
SR-FE-PSH-3300 — DRAWING/PART NUMBER
A — REVISION

NEXT ASSY: MULTIPLE
PROJECT: NSLS-II
THIRD ANGLE PROJECTION
SCALE: SEE DWG VIEW
WBS# 1.03.04.07.03
ESH&Q RISK LEVEL A2
SHEET 1 OF 1

C:\Mech-Eng\LT\SR\FE\PSH\SR-FE-PSH-3300.idw

RELEASED + EFFECTIVE

NOTES:

1. SURVEY AND ALIGN CHASSIS ASSEMBLY IN RATCHET WALL PENETRATION BEFORE ADDING ADDITIONAL SHIELDING AROUND CHASSIS. FINAL POSITION OF COMPONENTS TO BE LOCATED BY SURVEY GROUP.

2. PROTECT KNIFE EDGES. PLASTIC CAP OR BLANK SHOULD REMAIN ON FLANGE UNTIL ASSEMBLY OF VACUUM COMPONENTS. FLANGE REQUIREMENTS: THE TIGHTENING PROCESS MUST BE DONE GRADUALLY IN 1/4 TO 1/2 TURN INCREMENTS IN AN ALTERNATING CRISS-CROSS PATTERN UNTIL 15 FT-LB FOR 5/16 HARDWARE, OR 12 FT-LB FOR 1/4 HARDWARE, IS ACHIEVED.

3. LEAD BRICKS MUST BE INSTALLED AS SHOWN. REFER TO BRICK COLOR REFERENCE TABLE. (LEAD BRICK COLORS ON DRAWING ARE A VISUAL AID FOR ASSEMBLY ONLY, AND DO NOT REFLECT ACTUAL FINISHED COLOR OF BRICKS).

4. INSTALL CONCRETE BLOCK OR HDPE SHEETS TO MINIMIZE CLEARANCE BETWEEN PENETRATION WALLS AND RATCHET WALL COLLIMATOR. GAP MAY BE LARGER DUE TO SKEWED INSTALLATION OF WALL PENETRATION SLEEVES RELATIVE TO BEAMLINE AXIS. INSTALL ADDITIONAL HDPE FILLER SHIMS, 4" DEEP, TO MINIMIZE GAPS, WHEREVER POSSIBLE.

5. SOME PARTS LISTED ON THE B.O.M., INCLUDING THOSE WITH QTY A/R AND CONCRETE BLOCK, ARE FOR REPRESENTATION ONLY. ACTUAL MATERIAL THICKNESS IS DETERMINED BY FIELD MEASUREMENTS, DURING ASSEMBLY, TO MEET MINIMUM CLEARANCE REQUIREMENTS.

6. RATCHET LEAD ORIGINALLY INSTALLED PER CONVENTIONAL FACILITIES DIVISION, PER TORCON DRAWING 08301-1007-1. RATCHET LEAD GAP SPECS ARE DUPLICATED, FOR THIS ASSEMBLY.

5. DESIGNED IN ACCORDANCE WITH LT-C-ASD-RSI-SR-001, "PERFORMANCE REQUIREMENTS, ENGINEERING SPECIFICATIONS, AND INTERFACE CONTROL (RSI) FOR SUPPLEMENTAL SHIELDING DESIGN DOCUMENT (SSDS) FOR THE BST-P2 AND STORAGE RING" AND LT-EDP-013-026, "ENGINEERING DESIGN PLAN (EDP) FOR SUPPLEMENTAL SHIELDING FOR THE BST-P2 AND STORAGE RING".

REVISION HISTORY

REV	DESCRIPTION	DATE	DESIGNER	CHECKED BY	ENGINEER
A	RELEASE PER ECO-003817	2/2016	L.REFFI	CA/CS	M.BREITFELLER
B	REVISED PER ECO-004115	5/2016	J TUOZZOLO	CA/CS	C AMUNDSEN

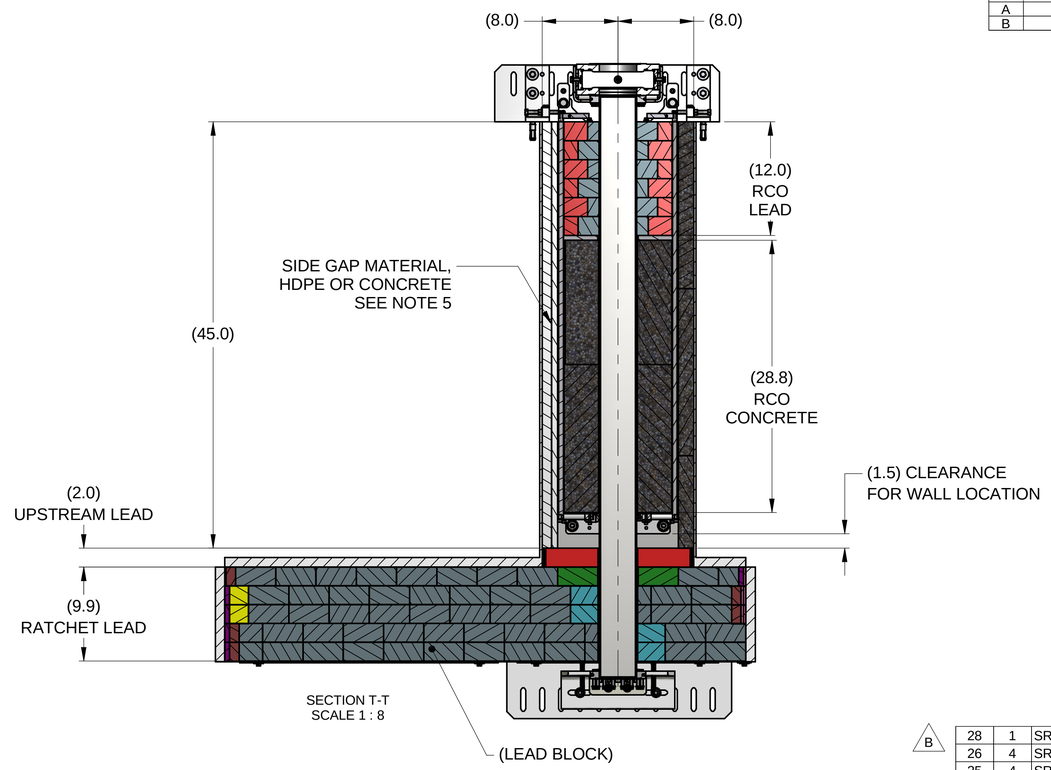

SECTION T-T
SCALE 1 : 8

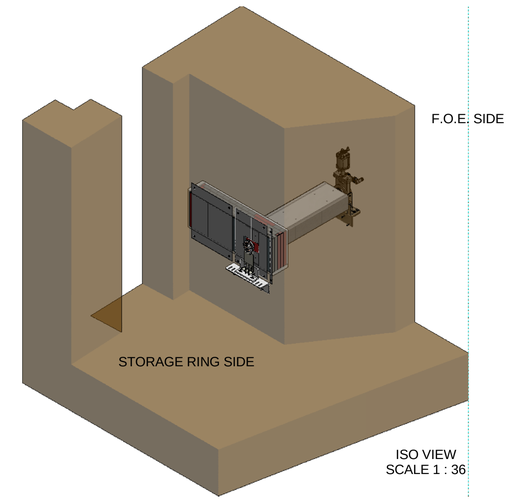

ISO VIEW
SCALE 1 : 36

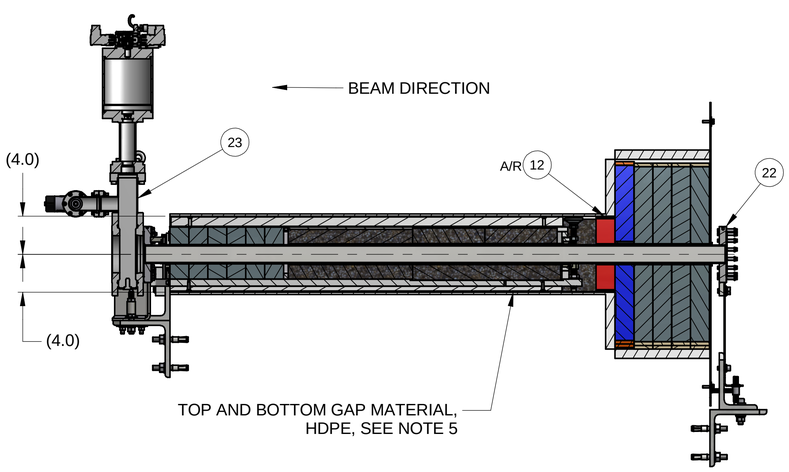

SECTION R-R
SCALE 1 : 8

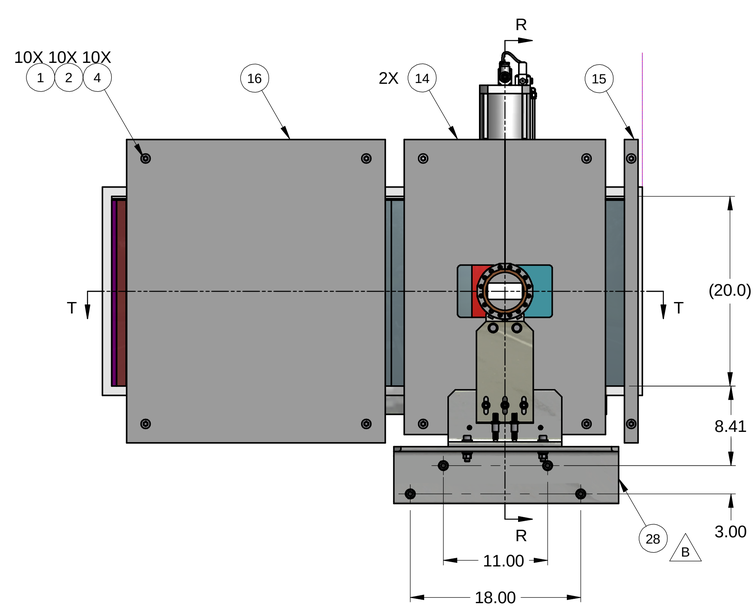

FRONT VIEW
SCALE 1 : 8

ITEM	QTY	PART NUMBER	DESCRIPTION	MATERIAL
28	1	SR-FE-RCO-3895	RCO UPSTREAM TUBE SUPPORT ASSY	
26	4	SR-FE-RCO-3886	LEAD, BLOCK & INSERT ASSY	
25	4	SR-FE-RCO-3885	LEAD, BLOCK	LEAD BRICK PER ASTM B29-03 (2009) GRADE L50049
24	4	SR-FE-RCO-3884	LEAD, BLOCK & INSERT ASSY	
23	1	SR-FE-RCO-3880	F.O.E. GATE VALVE ASSEMBLY	
22	1	SR-FE-RCO-3800	RATCHET WALL COLLIMATOR	
21	1	SR-FE-RCO-1585	PLATE, BRIDGE	STAINLESS STEEL TYPE 316L PER ASTM A240
20	2	SR-FE-RCO-1583	LEAD, BLOCK	LEAD BRICK PER ASTM B29-03 (2009) GRADE L50049
19	2	SR-FE-RCO-1582	LEAD, BLOCK & INSERT ASSY	
18	1	SR-FE-RCO-1082	PENETRATION LINER	STAINLESS STEEL TYPE 304 PER ASTM A240
17	A/R	SR-FE-RCO-0701	SIDE PLATE SHIELD	HIGH DENSITY POLYETHYLENE SHEET
16	1	SR-FE-RCO-0554	COVER PLATE	Steel, Mild
15	1	SR-FE-RCO-0553	COVER PLATE	Steel, Mild
14	2	SR-FE-RCO-0522	CENTER RETAINER PLATE	Steel, Mild
13	5	SR-FE-RCO-0517	LEAD, BLOCK	Lead, Per ASTM B29 & ASTM B749
12	A/R	SR-FE-RCO-0515	LEAD, RATCHET SHIM	Lead, Per ASTM B29 & ASTM B749
11	5	SR-FE-RCO-0514	LEAD, BLOCK	Lead, Per ASTM B29 & ASTM B749
10	2	SR-FE-RCO-0512	LEAD, BLOCK	Lead, Per ASTM B29 & ASTM B749
9	5	SR-FE-RCO-0510	LEAD, BLOCK	Lead, Per ASTM B29 & ASTM B749
8	3	SR-FE-3PW-RCO-3088	LEAD, SPACER	LEAD BRICK PER ASTM B29-03 (2009) GRADE L50049
7	12	SR-FE-3PW-RCO-3087	LEAD, SPACER	LEAD BRICK PER ASTM B29-03 (2009) GRADE L50049
6	A/R	SR-FE-3PW-RCO-1096	BASE PLATE SUPPORT	HIGH DENSITY POLYETHYLENE SHEET
5	A/R	PI-BLK-0006	SOLID CONCRETE BLOCK, 2" X 8" X 18"	Concrete
4	10	ANSI/ASME B18.2.1 - 1/4-20 UNC - 1	Hex Bolt - UNC (Regular Thread - Inch)	Steel, Mild, Zinc Pl
3	6	ANSI B18.3 - 1/4-20 UNC x 1	Hexagon Socket Flat Countersunk Head Cap Screw	Steel, Mild, Zinc Pl
2	10	ANSI B18.22.1 - 1/4 - wide - Type B	Plain Washer (Inch)Type A and B	Steel, Mild, Zinc Pl
1	10	ANSI B18.21.1 - 0.25	Helical Spring Lock Washers	Steel, Mild, Zinc Pl

PARTS LIST

UNLESS OTHERWISE SPECIFIED
ALL DIMENSIONS ARE IN INCHES
DIMENSIONS IN BRACKETS [xx.xx] (WHERE PRESENT) ARE MILLIMETERS AND ARE FOR REFERENCE ONLY
INTERPRET DRAWING AS PER ASME Y14.5-1994 OR Y32.2-1975

DIMENSIONAL TOLERANCES: X. ` 0.060; .X ` 0.030; .XX ` 0.015; .XXX ` 0.005
ANGULAR TOLERANCE: ` .5~
FINISH: 125√
BREAK EDGES & SHARP CORNERS 0.005 MIN. TO 0.030 MAX

BROOKHAVEN NATIONAL LABORATORY
BROOKHAVEN NATIONAL LABORATORY
BROOKHAVEN SCIENCE ASSOCIATES
UPTON, NEW YORK 11973
Exploring Life's Mysteries, Protecting its Future

NSLS II NATIONAL SYNCHROTRON LIGHT SOURCE II

DRAWN BY	L.REFFI	2/18/2016
CHECKED BY	CA/CS	2/2016
VACUUM APPROVAL	C.HETZEL	2/2016
ENGINEER APPROVAL	M.BREITFELLER	2/2016
SUPERVISOR APPROVAL	S SHARMA	2/2016
ES&H APPROVAL	A ACKERMAN	2/2016
QA APPROVAL	J HAWKES	2/2016

STORAGE RING
FRONT END, RATCHET WALL COLLIMATOR
PLUG SHIELD

SHEET SIZE: D
DRAWING/PART NUMBER: SR-FE-RCO-0700
REVISION: B

NEXT ASSY:
PROJECT:
THIRD ANGLE PROJECTION
SCALE: SEE DWG VIEW
WBS# 7.02.05.01
ESH&Q RISK LEVEL A-1
SHEET 1 OF 3

c:\mech-eng\LT\SR\FE\RCO\SR-FE-RCO-0700.idw

RELEASED + EFFECTIVE

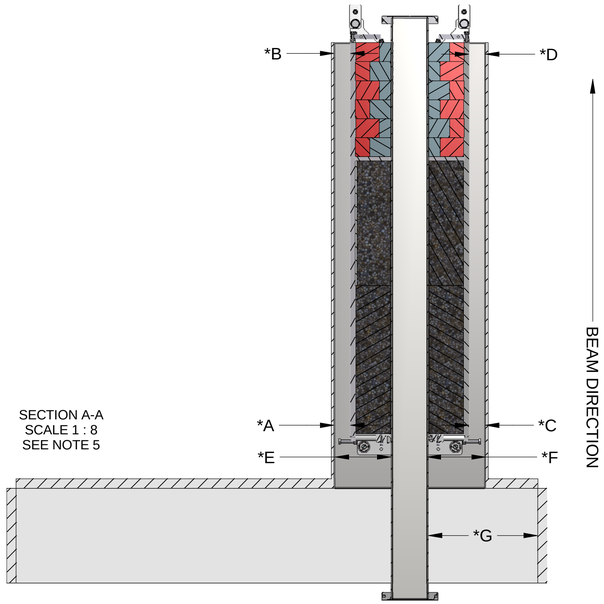

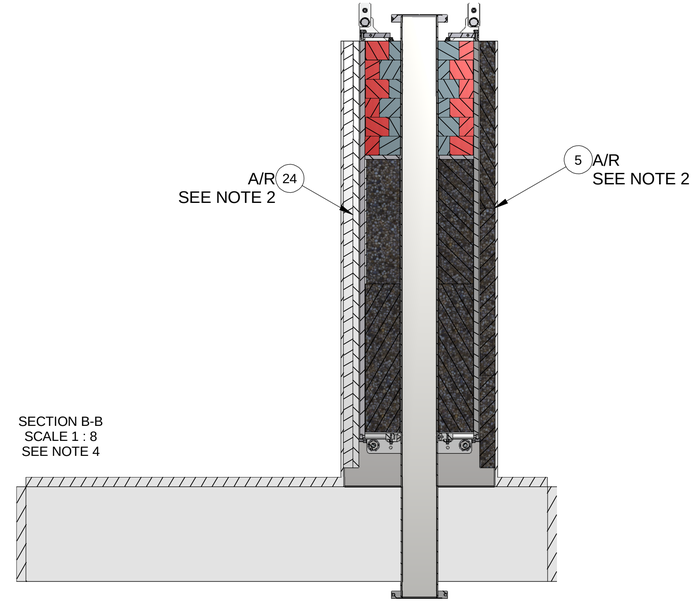

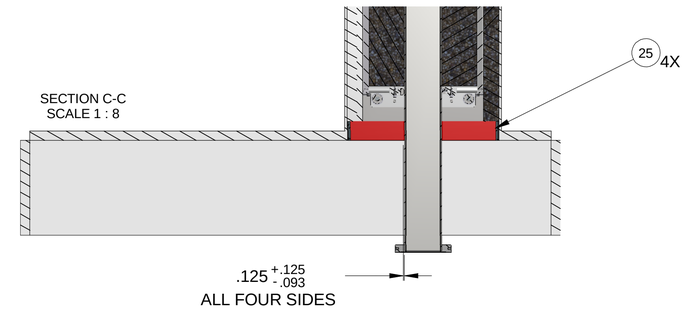

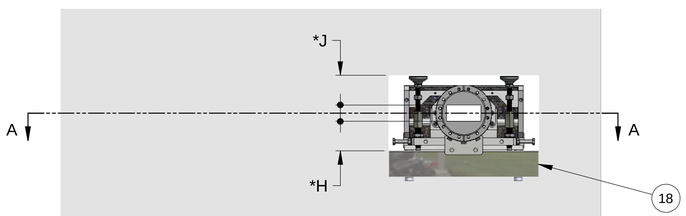

RATCHET WALL COLLIMATOR INSTALLED
SCALE 1 : 8

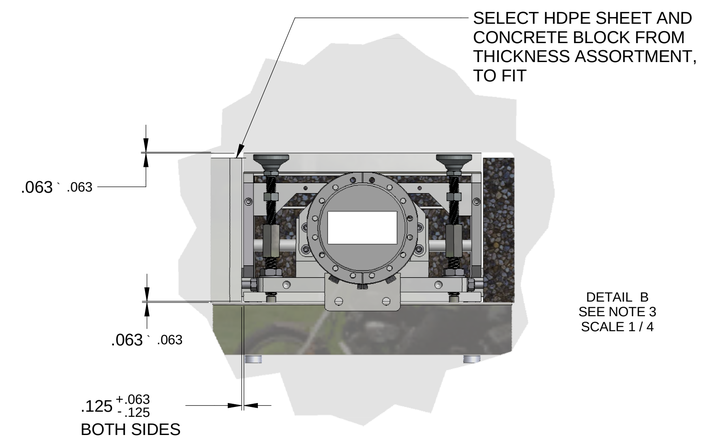

DETAIL B
SEE NOTE 3
SCALE 1 / 4

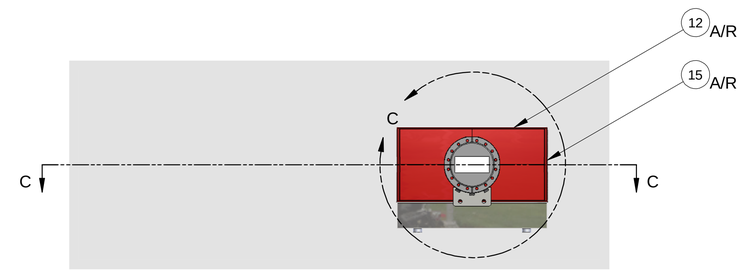

UPSTREAM LEAD
SCALE 1 : 8

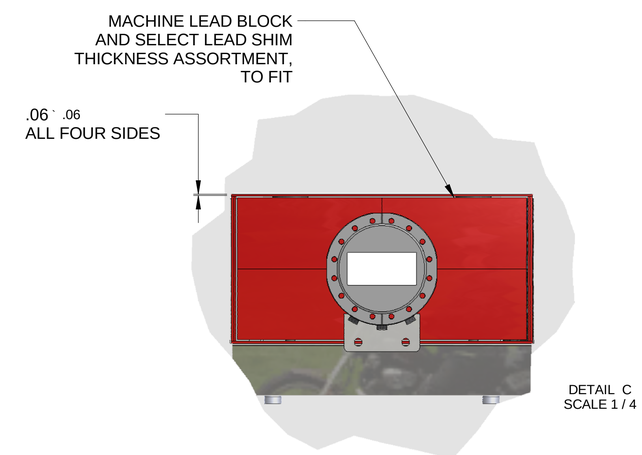

DETAIL C
SCALE 1 / 4

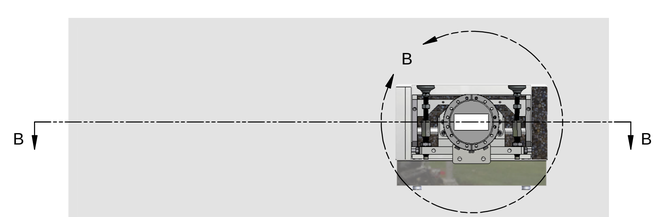

SIDE GAP MATERIAL
SCALE 1 : 8

D	SR-FE-RCO-0700	B
SHEET SIZE	DRAWING/PART NUMBER	REVISION
ESH&Q RISK LEVEL A-1	SHEET 2 OF 3	

c:\mech-eng\LT\SR\FE\RCO\SR-FE-RCO-0700.idw

RELEASED + EFFECTIVE

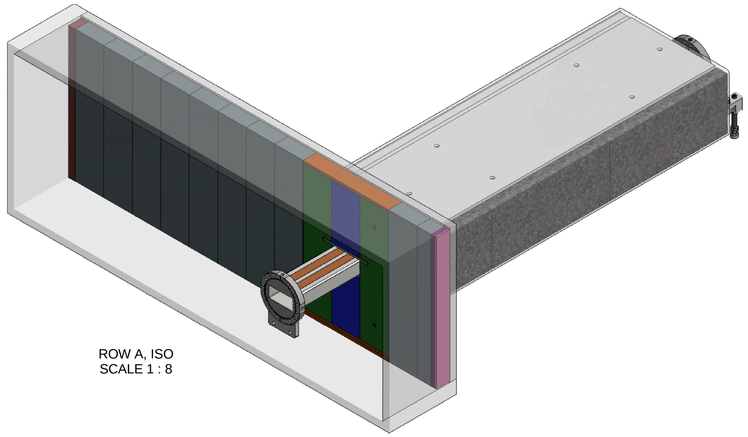

ROW A, ISO
SCALE 1 : 8

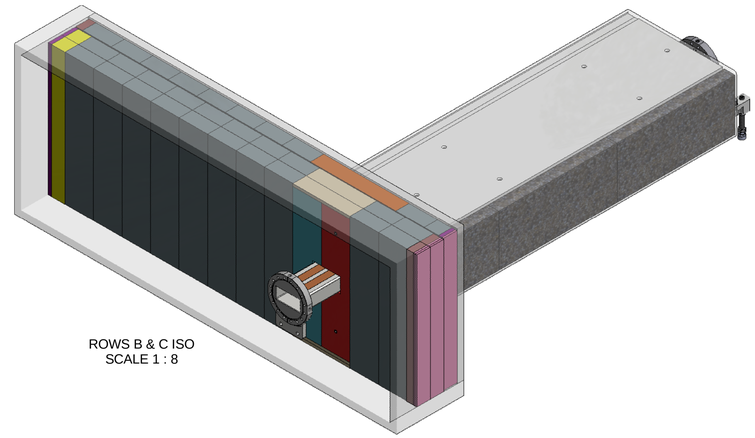

ROWS B & C ISO
SCALE 1 : 8

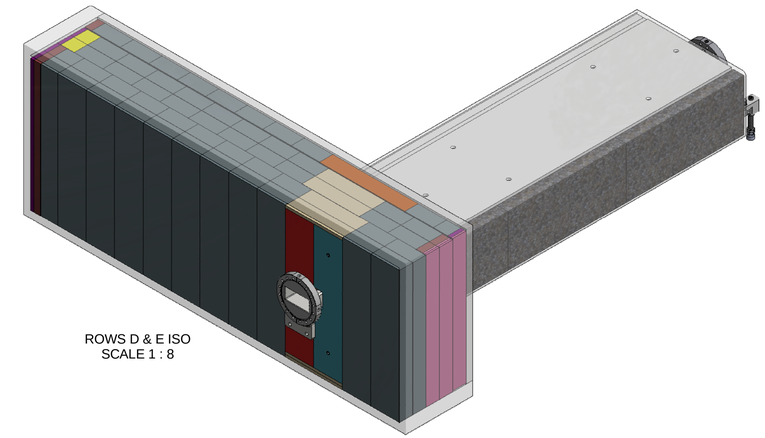

ROWS D & E ISO
SCALE 1 : 8

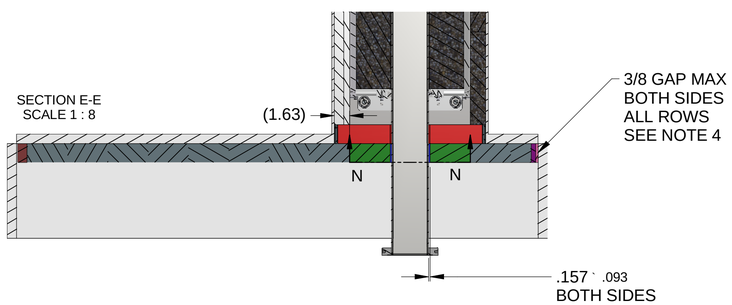

SECTION E-E
SCALE 1 : 8

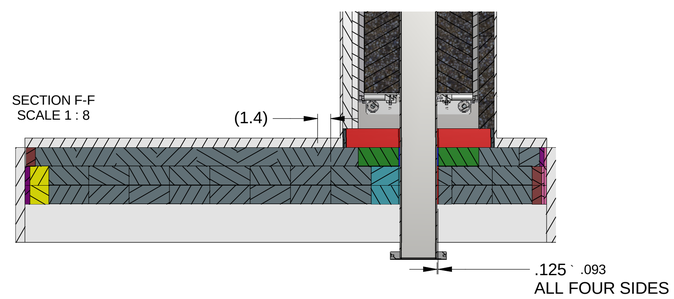

SECTION F-F
SCALE 1 : 8

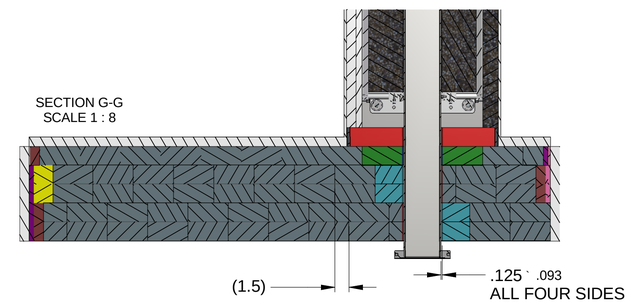

SECTION G-G
SCALE 1 : 8

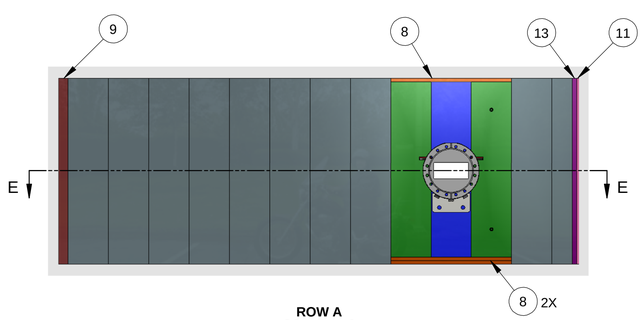

ROW A
SCALE 1 : 8

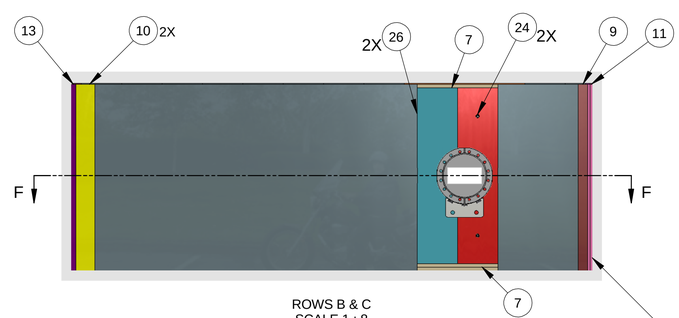

ROWS B & C
SCALE 1 : 8

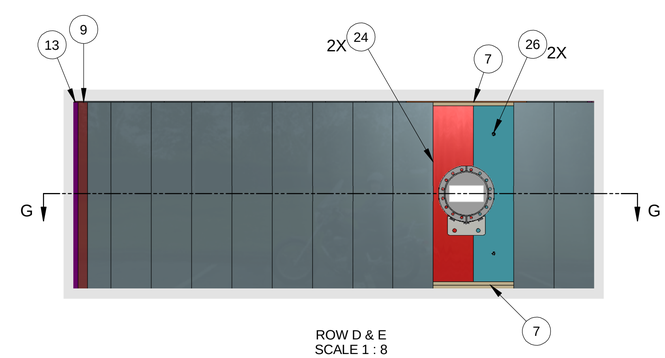

ROW D & E
SCALE 1 : 8

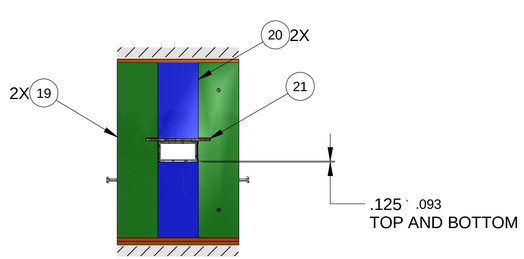

SECTION N-N
SCALE 1 : 8

SELECT BLOCK, PER AVAILABLE ASSORTMENT,
TO FILL OUTER PENETRATION,
BOTH SIDES OF ALL ROWS

BRICK COLOR REFERENCE		
PART NO.	REF. COLOR	DIMENSIONS
SR-FE-RCO-0510	BROWN	1.0 X 2.0 X 19.63
SR-FE-RCO-0512	YELLOW	2.0 X 2.0 X 19.63
SR-FE-RCO-0514	PINK	.25 X 2.0 X 19.63
SR-FE-RCO-0517	PURPLE	.50 X 2.0 X 19.63
SR-FE-RCO-1582	GREEN	4.25 X 2.0 X 18.50
SR-FE-RCO-1583	BLUE	4.25 X 2.0 X 8.00
SR-FE-RCO-3884	RED	4.25 X 2.0 X 18.50
SR-FE-RCP-3886	CYAN	4.25 X 2.0 X 18.50
SR-FE-3PW-RCO-3087	BEIGE	.38 X 2.0 X 8.5
SR-FE-3PW-RCO-3088	ORANGE	.38 X 2.0 X 12.75

D (SHEET SIZE)	SR-FE-RCO-0700 (DRAWING/PART NUMBER)	B (REVISION)
ESH&Q RISK LEVEL A-1	SHEET 3 OF 3	

c:\mech-eng\LTSR\FE\RCO\SR-FE-RCO-0700.idw

RELEASED + EFFECTIVE

REVISION HISTORY					
REV	DESCRIPTION	DATE	DESIGNER	CHECKED BY	ENGINEER
A	RELEASE PER ECO-003065	1/2016	L.REFFI	CA/CS	C.AMUNDSEN
B	REVISE AS PER ECO-003674	1/2016	L.REFFI	CA/CS	C.AMUNDSEN
C	REVISE AS PER ECO-004116	4/2016	J TUOZZOLO	CA/CS	C.AMUNDSEN

NOTES:

1. ITEM IDENTIFICATION: METAL STAMP, SCRIBE OR ELECTRO-ETCH PART NO AND APPLICABLE REV LTR USING .25 HIGH CHARACTERS.
2. INSTALL SAFETY WIRES AFTER FINAL ALIGNMENT.
3. INSTALL COVER PLATES W/ GASKETS (PI-FLG-0080).
4. RAISE PUMP SUPPORT TO ACCEPT FULL WEIGHT OF PUMP. CONFIRM A MINIMUM OF .25" ADDITIONAL SPRING TRAVEL.
5. AFTER FINAL ALIGNMENT, TORQUE NUTS TO 300 FT-LB.
6. FLANGE REQUIREMENTS: THE TIGHTENING PROCESS MUST BE DONE GRADUALLY IN 1/4 TO 1/2 TURN INCREMENTS IN AN ALTERNATING CRISS-CROSS PATTERN UNTIL 15 FT-LB IS ACHIEVED ON 5/16-24 AND 12 FT-LB ON 1/4-28 HARDWARE.
7. USE NUT PLATES WHERE POSSIBLE (PI-NUT-0018, PI-NUT-0020)

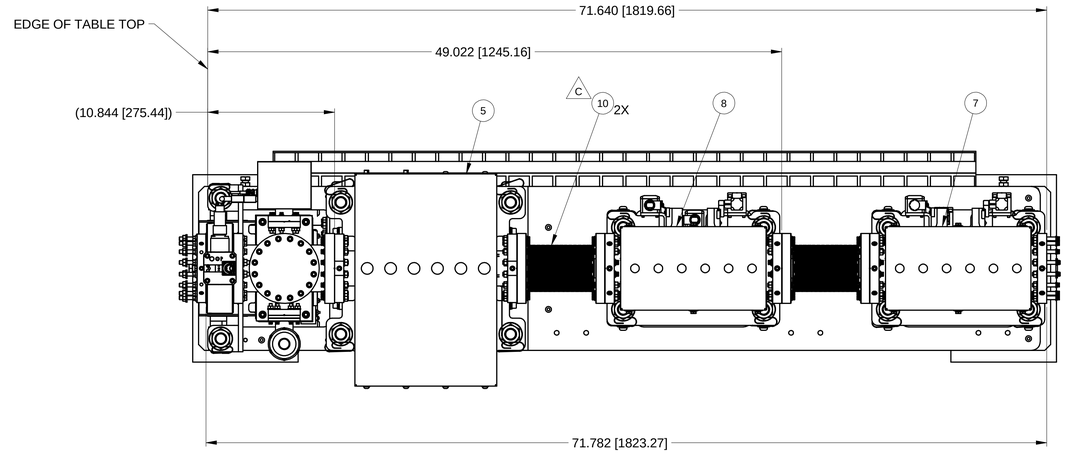

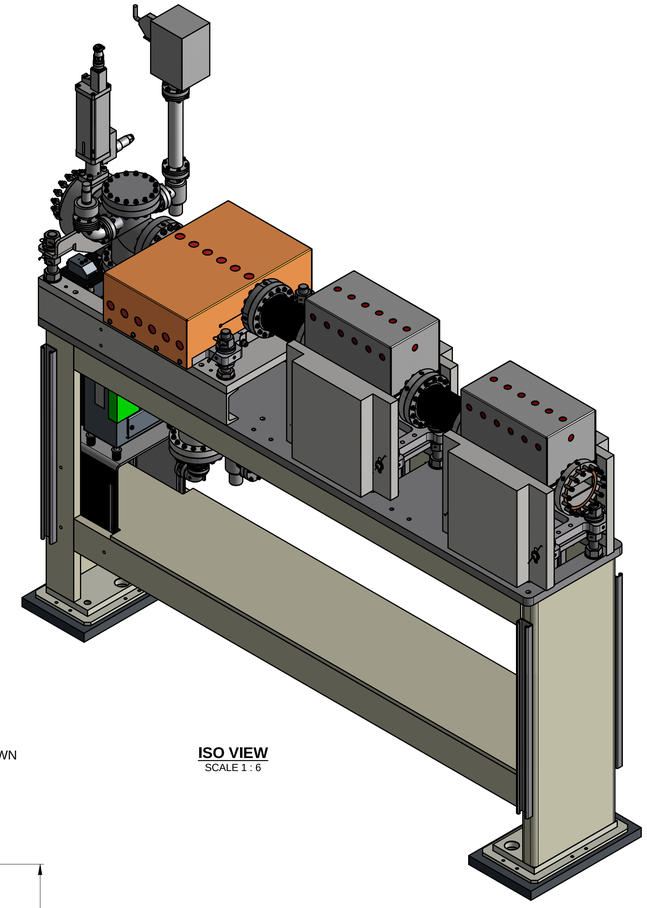

ISO VIEW
SCALE 1 : 6

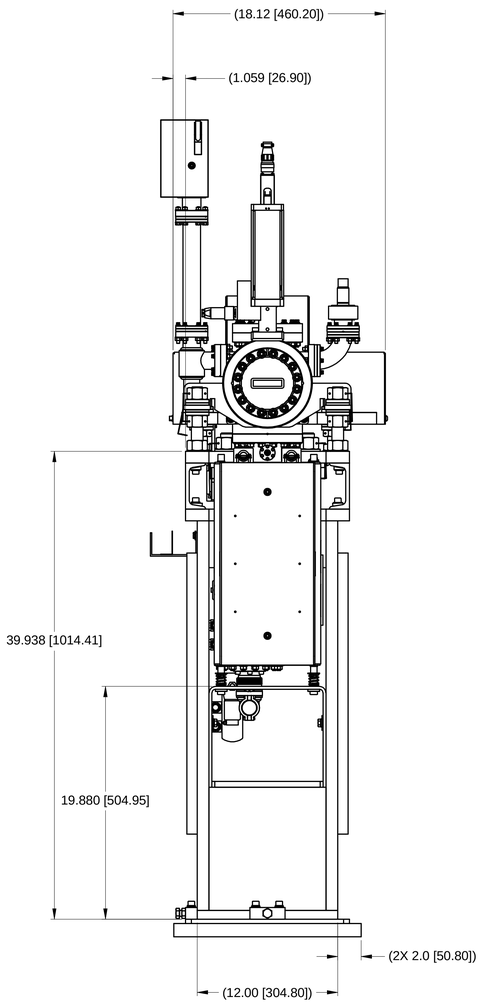

BACK VIEW

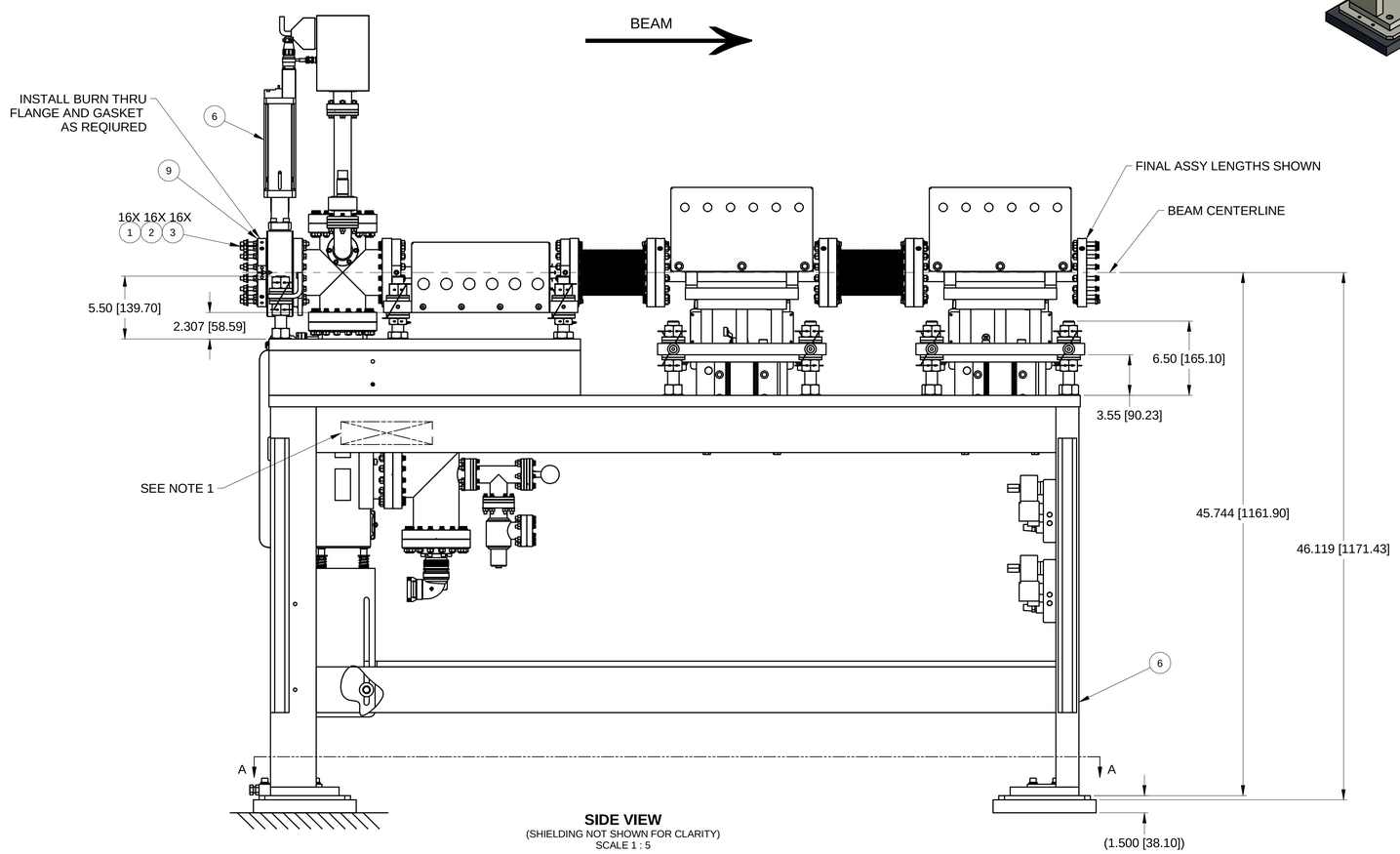

SIDE VIEW
(SHIELDING NOT SHOWN FOR CLARITY)
SCALE 1 : 5

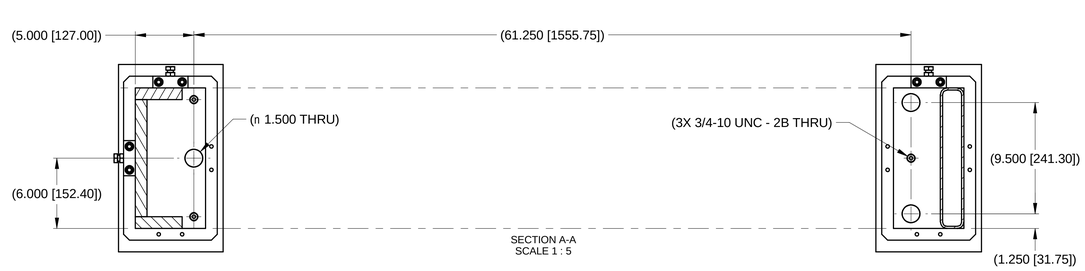

SECTION A-A
SCALE 1 : 5

ITEM	QTY	PART NUMBER	DESCRIPTION	MATERIAL
10	2	SR-FE-BLW-0039	WELDED, BELLOWS, 6" CF FLG	
9	1	SR-FE-ABS-3840	BURN THRU FLANGE, MODIFIED	
8	1	SR-FE-3PW-SS-4000	SAFETY SHUTTER ASSEMBLY #1	
7	1	SR-FE-3PW-SS-4100	SAFETY SHUTTER ASSEMBLY #2	
6	1	SR-FE-SS-1000	SAFETY SHUTTER, ASSEMBLY	
5	1	SR-FE-CO-3800	COLLIMATOR, LEAD, LCO2, 1" X 3"	
3	16	PI-ROD-0073	ROD, SST, M8-1.25 X 70 mm, SILVER PL	STAINLESS STEEL TYPE 18-8
2	16	ANSI B18.22M - 8 N	Metric Plain Washers	STAINLESS STEEL TYPE 18-8
1	16	ANSI B 18.2.4.1 M - M8 x 1.25	Hex Nut	STAINLESS STEEL TYPE 18-8

PARTS LIST

UNLESS OTHERWISE SPECIFIED
ALL DIMENSIONS ARE IN INCHES
DIMENSIONS IN BRACKETS [x.x] (WHERE PRESENT) ARE MILLIMETERS AND ARE FOR REFERENCE ONLY
INTERPRET DRAWING AS PER ASME Y14.5-1994 OR Y32.3-1975

DIMENSIONAL TOLERANCES	ANGULAR TOLERANCE
.X ± 0.060	±.5°
.X ± 0.030	FINISH 125
.XX ± 0.015	
.XXX ± 0.005	

BREAK EDGES & SHARP CORNERS 0.005 MIN. TO 0.030 MAX.

BROOKHAVEN NATIONAL LABORATORY
BROOKHAVEN SCIENCE ASSOCIATES
UPTON, NEW YORK 11973
Exploring Life's Mysteries
Protecting its Future

NSLS II NATIONAL SYNCHROTRON LIGHT SOURCE II

DRAWN BY	L.REFFI	3/30/2015
CHECKED BY	C AMARITO	1/2016
VACUUM APPROVAL	C.HETZEL	1/2016
ENGINEER APPROVAL	C.AMUNDSEN	1/2016
SUPERVISOR APPROVAL	S SHARMA	1/2016
ESH APPROVAL	A ACKERMAN	1/2016
QA APPROVAL	J HAWKES	1/2016

STORAGE RING
FRONT END, SAFETY SHUTTER
ASSY, SAFETY SHUTTER, CANTED BEAMLINE

E — SHEET SIZE
SR-FE-SS-3800 — DRAWING/PART NUMBER
C — REVISION

NEXT ASSY:	SR-FE-IVU19-1000
NEXT ASSY:	SR-FE-IVU07-1000
PROJECT:	NSLS-II

THIRD ANGLE PROJECTION
SCALE: SEE DWG VIEW
WBS# 1.03.04.07.03
ESH&Q RISK LEVEL A1
SHEET 1 OF 1

C:\TEMP-SolidT\126-8620--42k2c-bf85-5507dfb8b\Mech-Eng\LT\SR\FE\SS\SR-FE-SS-3800.dwr

RELEASED + EFFECTIVE

NOTES:

1. ALL ORDINATE DIMENSIONS ARE TAKEN FROM THE CENTER OF THE LONG (EVEN CELL) OR SHORT (ODD CELL) STRAIGHT SECTION AS NOTED.

REVISION HISTORY					
REV	DESCRIPTION	DATE	DESIGNER	CHECKED BY	ENGINEER
A	INITIAL RELEASE PER ECO-002989	3/2015	C. LONGO	C AMARITO	C. HETZEL

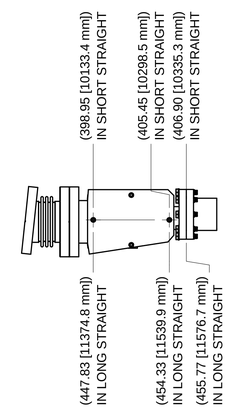

VIEW B-B

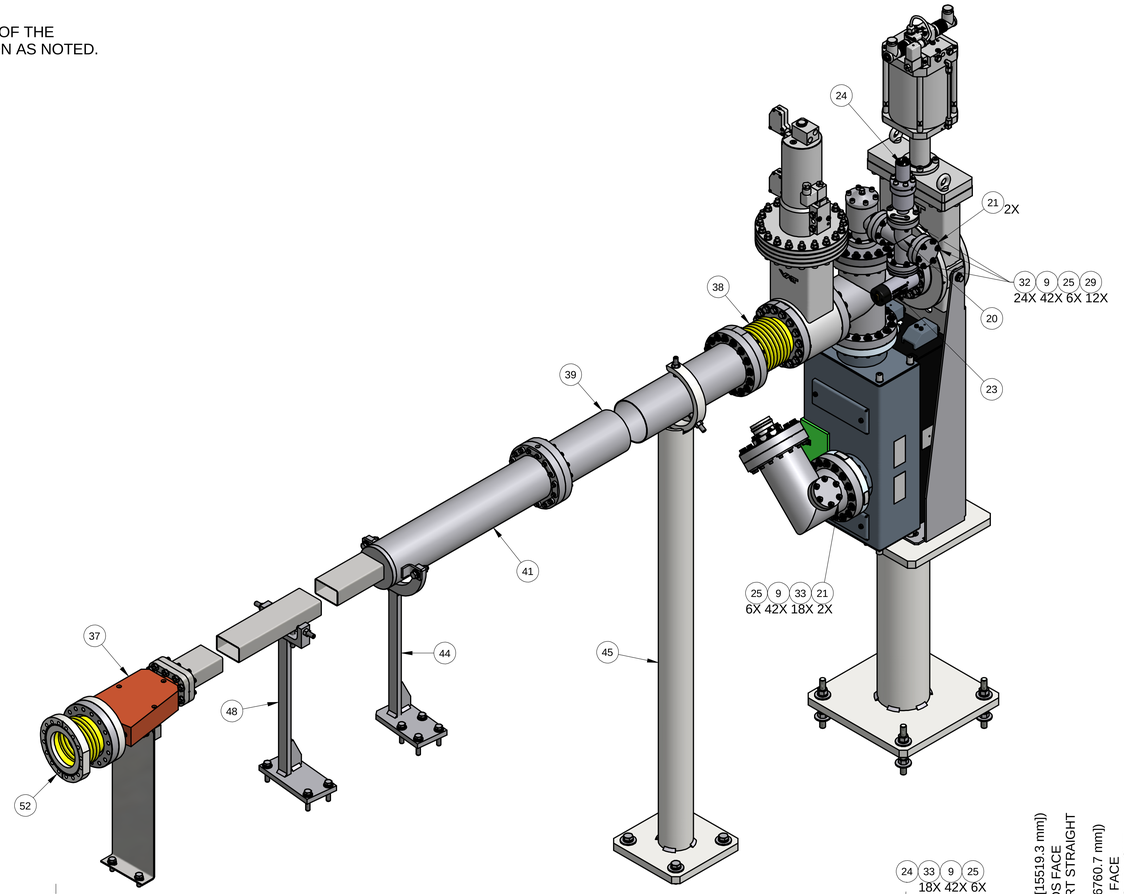

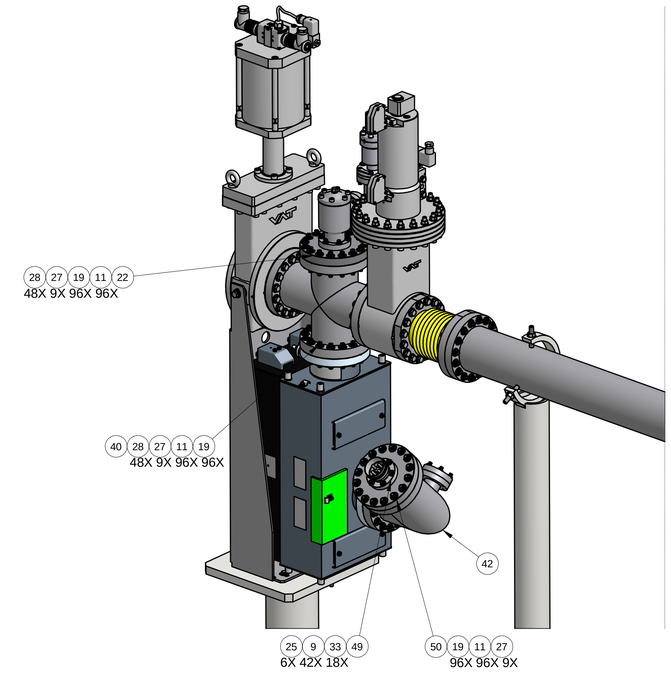

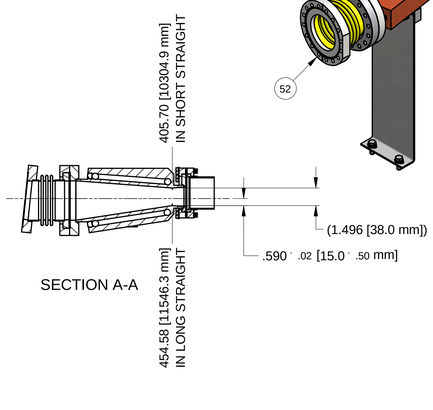

SECTION A-A

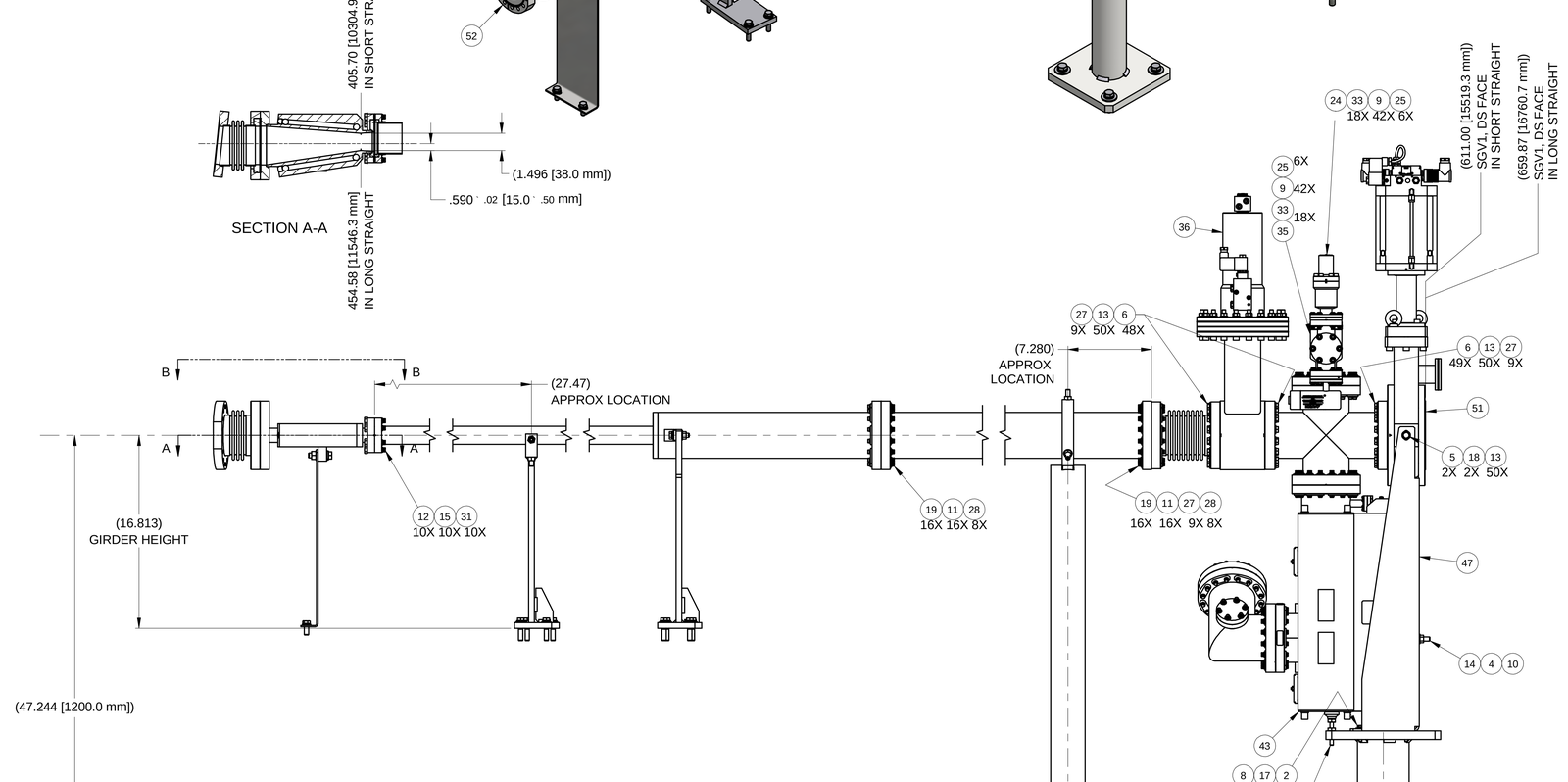

SCALE 1 : 5

ITEM	QTY	PART NUMBER	DESCRIPTION	MATERIAL
52	1	SR-VA-BLW-0005	BELLOWS, WELD, 6.00 CF X 6 DEG.	
51	1	SR-VA-VLV-0005	VALVES, ALL METAL GATE VALVE, DN100, NR DIA. 6.00 CF	
50	1	SR-VA-TSP-0013	FLANGE, ZERO LENGTH REDUCER, 6" CF TO 2.75" CF	Stainless Steel, Type 304, PER ASTM A240
49	1	SR-VA-TSP-0001	PUMP, TITANIUM SUBLIMATOR	
48	1	SR-VA-STD-1208	SUPPORT ASSY, S3 EXIT, UPSTRM	
47	1	SR-VA-STD-1172	SUPPORT STAND WELD, GV (DN 100)	
46	1	SR-VA-STD-1170	STAND, GV SUPPORT, WELD	
45	1	SR-VA-STD-1162	SUPPORT ASSY, S3 EXIT, DWNSTRM	
44	1	SR-VA-STD-1161	SUPPORT ASSY, S3 EXIT, FIXED	
43	1	SR-VA-PMP-2013	PUMP, ION, 200 L/S 6.00 CF, VAC CHM	
42	1	SR-VA-PMP-0028	ELBOW, MITERED	
41	1	SR-VA-CHM-0343	CHM, S3 EXIT, WELDMENT	
40	1	SR-VA-CHM-0308	CROSS, 4-WAY, TUBULAR BODY, 6.00 CF	
39	1	SR-VA-CHM-0304	S3 EXIT PIPE EXT, WELDMENT	
38	1	SR-VA-BLW-0003	BELLOWS, WELD, 6.00 CF X 6.00 NOM LENGTH	
37	1	SR-VA-ABSW-2030	ABSORBER ASSY, 38mm X 25mm	
36	1	PI-VLV-0027	STOP, PHOTON BEAM	
35	1	PI-VLV-0023	VALVE, ALL METAL ANGLE, EASY CLOSE	
34	1	PI-STD-0004	SWIVEL LEVELING MOUNT, 5/16-18 X 2"	Steel
33	18	PI-SCR-0054	SCR, FLANGE, 12-PT, .250-28 X .88	SST, SILVER PL
32	24	PI-SCR-0053	SCR, FLANGE, 12-PT, .250-28 X 1.25	SST, SILVER PL
31	10	PI-SCR-0011	SCREW, 12 PT FLANGE STL (IFI 115 - 5/16 - 24 - 1.50)	SST, SILVER PL
30	4	PI-ROD-0022	ROD, 1/2"-13 UNC-1A X 5.0" LG	Steel
29	12	PI-NUT-0020	PLATE NUT, 2.75 CF	
28	48	PI-NUT-0018	PLATE NUT, 6.00 CF	STAINLESS STEEL
27	9	PI-GSKT-0006	GASKET, COPPER, 4.01 ID (6.00 CF)	
26	1	PI-GSKT-0004	GASKET, COPPER, 2.01 ID (3.37 CF)	
25	6	PI-GSKT-0003	GASKET, COPPER, 1.45 ID (2.75 CF)	
24	1	PI-GAGE-0002	GAUGE, COLD CATHODE	
23	1	PI-GAGE-0001	GAUGE, PIRANI	
22	1	PI-FLG-0042	FLANGE, ZERO LENGTH REDUCER, 6" CF TO 2.75" CF	
21	2	PI-FLG-0003	FLANGE, BLANK, NR, DIA. 2.75 CF	
20	1	PI-CROSS-0015	CROSS, 4 WAY, TUBULAR, 2.75 CF	STAINLESS STEEL TYPE 304
19	96	IFI 115 - 5/16 - 24 - 2	SCR, FLANGE, 12 PT	SST TYPE 304, SILVER PL
18	2	ASME B18.21.2M - 8	WASHER, LOCK, HELICAL SPRING, METRIC	SST TYPE 304
17	4	ASME B18.21.1 - 1/4	WASHER, LOCK, HELICAL SPRING	SST TYPE 304
16	8	ASME B18.21.1 - 1/2	WASHER, LOCK, HELICAL SPRING	STEEL, GR 8, ZINC PL
15	10	ANSI B18.6.3 - 5/16 - 24	Hex Machine Screw Nut	Steel, Mild
14	1	ANSI B18.3 - 3/8-16 UNC x 1.75	SCR, SET, OVAL PT	STEEL, GR 8, ZINC PL
13	50	ANSI B18.22M - 8 N	WASHER, PLAIN, METRIC	SST TYPE 304
12	10	ANSI B18.22.1 - 5/16 - narrow - Type B	Plain Washer (Inch)Type A and B	Steel, Mild
11	96	ANSI B18.22.1 - 5/16 - narrow - Type A	WASHER, PLAIN	SST TYPE 304
10	1	ANSI B18.22.1 - 3/8 - narrow - Type A	WASHER, PLAIN	STEEL, GR 8, ZINC PL
9	42	ANSI B18.22.1 - 1/4 - narrow - Type B	WASHER, PLAIN	SST TYPE 304
8	4	ANSI B18.22.1 - 1/4 - Regular - Type B	WASHER, PLAIN	SST TYPE 304
7	16	ANSI B18.22.1 - 1/2 - wide - Type A	WASHER, PLAIN	STEEL, GR 8, ZINC PL
6	48	ANSI B18.2.3.1M - M8 x 1.25 x 35	SCR, CAP, HEX HD, METRIC	SST TYPE 304
5	2	ANSI B18.2.3.1M - M8 x 1.25 x 20	Metric Hex Cap Screw	Steel, Mild
4	1	ANSI B18.2.2 - 3/8 - 16	NUT, HEX	STEEL, GR 8, ZINC PL
3	12	ANSI B18.2.2 - 1/2 - 13	NUT, HEX	STEEL, GR 8, ZINC PL
2	4	ANSI B18.2.1 - 1/4-20 UNC - 1.25	SCR, HEX CAP	SST TYPE 304
1	4	ANSI B18.2.1 - 1/2-13 UNC - 1.75	SCR, HEX CAP	STEEL, GR 8, ZINC PL

PARTS LIST

UNLESS OTHERWISE SPECIFIED
ALL DIMENSIONS ARE IN INCHES
DIMENSIONS IN BRACKETS [xx.xx] (WHERE PRESENT) ARE MILLIMETERS AND ARE FOR REFERENCE ONLY
INTERPRET DRAWING AS PER ASME Y14.5-1994 OR Y32.2-1975

DIMENSIONAL TOLERANCES		ANGULAR TOLERANCE
X. `	0.060	.5~
.X `	0.030	Finish 125
.XX `	0.015	
.XXX `	0.005	

BREAK EDGES & SHARP CORNERS 0.005 MIN. TO 0.030 MAX

BROOKHAVEN NATIONAL LABORATORY
Exploring Life's Mysteries, Protecting its Future

BROOKHAVEN NATIONAL LABORATORY
BROOKHAVEN SCIENCE ASSOCIATES
UPTON, NEW YORK 11973

NSLS II NATIONAL SYNCHROTRON LIGHT SOURCE II

DRAWN BY	C. LONGO	3/11/2015
CHECKED BY	C. AMARITO	3/2015
VACUUM ENGINEER	C. HETZEL	3/2015
ENGINEER APPROVAL	C. HETZEL	3/2015
SUPERVISOR APPROVAL	C. HETZEL	3/2015
ES&H APPROVAL	A. ACKERMAN	3/2015
QA APPROVAL	E. CHESWICK	3/2015

STORAGE RING
VACUUM SYSTEMS, CHAMBERS
EXIT CHM SUBASSY, S3 (38mm X 25mm)

SHEET SIZE: E
DRAWING/PART NUMBER: SR-VA-CHM-3230
REVISION: A

NEXT ASSY:
PROJECT:

THIRD ANGLE PROJECTION
SCALE: SEE DWG VIEW
WBS# 1.03.04.03.01
ESH&Q RISK LEVEL A1
SHEET 1 OF 1

C:\Mech-Eng\LTSR\VAC\HMS\SR-VA-CHM-3230.sldprt

RELEASED + EFFECTIVE