REVISION HISTORY					
REV	DESCRIPTION	DATE	DESIGNER	CHECKED BY	ENGINEER
A	RELEASE PER ECO-001445	6/13	FAUSSETE	AMARITO	DOOM
B	RELEASE PER ECO-001563	5/14	FAUSSETE	ALMASY	HUSSAIN
C	RELEASE PER ECO-002377	7/14	FAUSSETE	AMARITO	HUSSAIN
D	RELEASE PER ECO-002614	10/14	FAUSSETE	AMARITO	HUSSAIN
E	RELEASE PER ECO-002656	10/14	FAUSSETE	AMARITO	DACOS
F	RELEASE PER ECO-002848	1/15	FAUSSETE	AMARITO	ANTONELLI
G	RELEASE PER ECO-003482	9/15	FAUSSETE	AMARITO	BREITFELLER
H	RELEASE PER ECO-003900	6/2016	FAUSSETE	CA/CS	BREITFELLER
J	RELEASE PER ECO-004445	8/2016	FAUSSETE	CA/CS	BREITFELLER

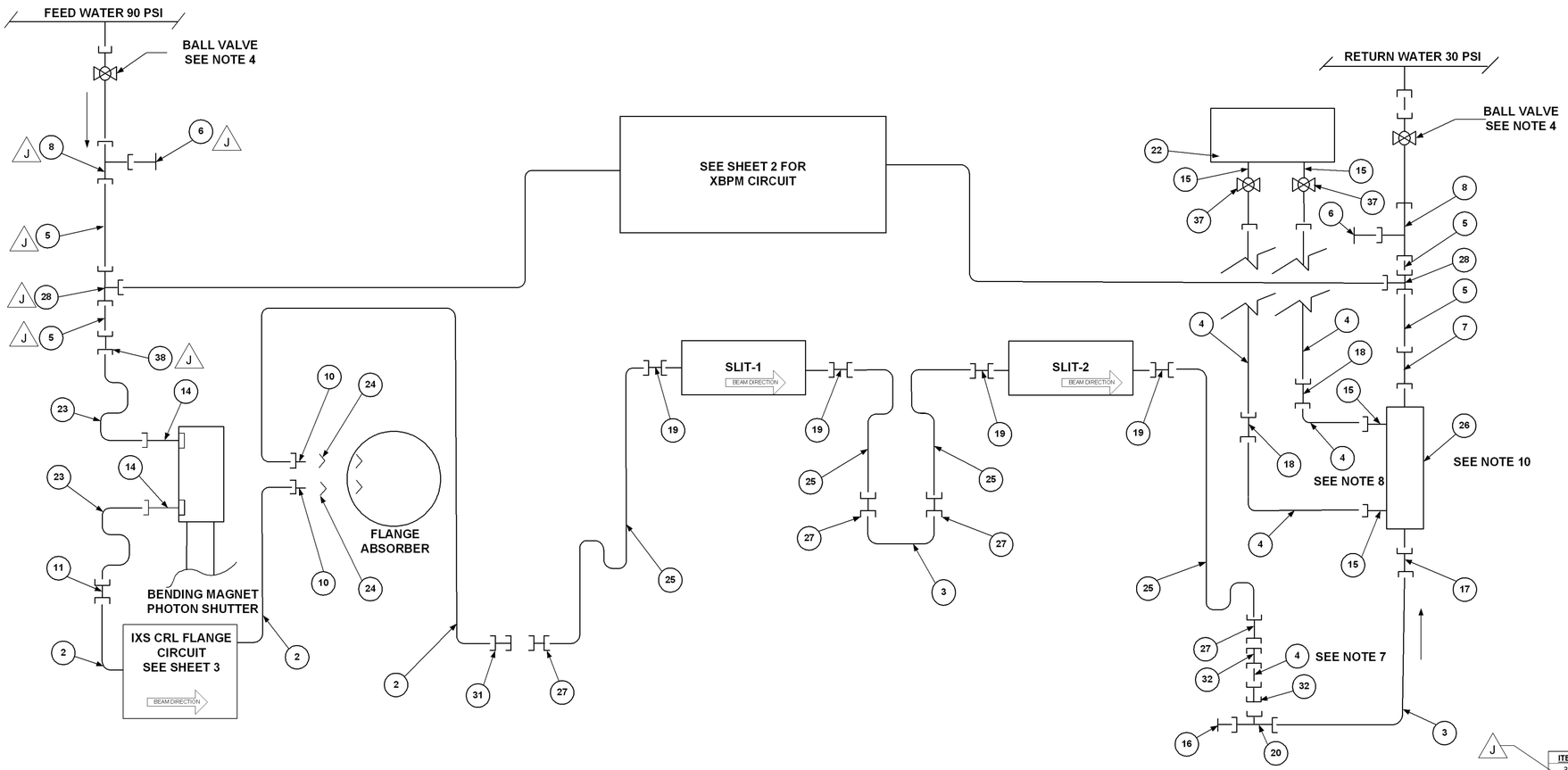

ITEM	QTY	DESCRIPTION	SIZE	PART NUMBER	VENDER
38	1	UNION	1/2" TUBE TO X 3/8" TUBE	SS-810-6-6	SWAGELOK
37	2	BALL VALVE	1/4" FNPT	SS-43GES4-LL	SWAGELOK
36					
35					
34					
33					
32	2	REDUCING UNION	1/4" COMP X 3/4" TUBE	SS-400-R-12	SWAGELOK
31	1	REDUCING UNION	3/8" COMP X 3/4" TUBE	SS-600-R-12	SWAGELOK
30					
29					
28	2	UNION ("T)"	1/2 COMP X 1/2 COMP X 1/2 COMP	SS-810-3	SWAGELOK
27	4	BULKHEAD UNION	3/4" COMP X 3/4" COMP	SS-1210-61	SWAGELOK
26	1	FLOW METER	1/2" NPTM X 1/2" NPTM (1/4"NPTF TAPS)	PI-FLW-0005	McCROMETER
25	4	HOSE ASSY, BRAIDED SS	3/4" TUBE X 3/4" TUBE	PI-HOSE-0006	TEK STAINLESS PIPING PRODUCTS
24	2	FLARETITE COPPER SEAL 37 DEG	3/8" AN	PI FTNGS-0168	SWAGELOK
23	2	HOSE ASSY, BRAIDED SS	3/8" TUBE X 3/8" TUBE	PI-HOSE-0005	TEK STAINLESS PIPING PRODUCTS
22	1	TRANSMITTER	1/4" NPTF X 1/4" NPTF	PI-SNSR-0033	YOKOGAWA
21					
20	1	UNION, (" T ")	3/4 COMP X 3/4 COMP X 3/4 COMP	SS-1210-3	SWAGELOK
19	4	UNION (STRAIGHT)	3/4" COMP X 5/8" COMP.	SS-1210-6-10	SWAGELOK
18	2	UNION	1/4" COMP X 1/4" COMP.	SS-400-6	SWAGELOK
17	1	CONNECTOR	3/4" COMP X 1/2"NPTF	SS-1210-7-8	SWAGELOK
16	1	PLUG	3/4"	SS-1210-P	SWAGELOK
15	4	MALE CONNECTOR	1/4" NPTM X 1/4 NPTM	SS-400-1-4	SWAGELOK
14	2	MALE CONNECTOR	1/4" NPTM X 3/8 COMP.	SS-600-1-4RT	SWAGELOK
13					
12					
11	1	UNION	3/8" COMP X 3/8" COMP.	SS-600-6	SWAGELOK
10					
9					
8	1	UNION (" T ")	1/2" COMP. X 1/2" COMP. X 1/2" NPTM	SS-810-3-8TMT	SWAGELOK
7	1	FEMALE CONNECTOR	1/2" COMP. X 1/2" NPTF	SS-810-7-8	SWAGELOK
6	2	PLUG	1/2"	SS-810-P	SWAGELOK
5	AR	TUBE	1/2" OD, .049" WALL, ST. STL. 304/304L		
4	AR	TUBE	1/4" OD, .035" WALL, ST. STL. 304/304L		
3	AR	TUBE	3/4" OD, .049" WALL, ST. STL. 304/304L		
2	AR	TUBE	3/8" OD, .035" WALL, ST. STL. 304/304L		
1	AR	TUBE	5/8" OD, .049" WALL, ST. STL. 304/304L		

NOMINAL FLOW (GPM)	WARNING POINT (GPM)	TRIP POINT (GPM)
1.5 ± 0.2	1.2	.9

NOTES:
1. USE TWO PART THREAD SEALANT ON NPT FITTING. P/N: PRIMER 7471 P/N: LOCKTITE SEALANT 545
2. INSTALL COMPRESSION FITTINGS PER SWAGELOK AN INSTALLER'S POCKET GUIDE FOR SWAGELOK TUBE FITTINGS, MS-13-151.
3. SEE SHEET 2 FOR XBPM PIPING DIAGRAM.
4. SEE UTILITY, COORDINATION PLAN DRAWING, FOR HEADER BALL VALVE IDENTIFICATION P1: UT-SR-PSYS-1011, P2: UT-SR-PSYS-2011, P3: UT-SR-PSYS-3011, P4: UT-SR-PSYS-4011, P5: UT-SR-PSYS-5011.
   SEE UTILITY, FLOW XMTR STD INTERFACE DRAWING, FOR TRANSMITTER IDENTIFICATION AND DETAIL UT-XMTR-STD-1100.
5. TARGET FLOW = 1.5 GPM.
6. IXS CRL FLANGE CIRCUIT FOR CELL 10 ONLY.
7. ADD FLOW RESTRICTOR COIL AS REQUIRED.
8. LEAK TEST SYSTEM AT 150 PSI, PER ASME B31.3 USE A PRESSURE GAUGE CALIBRATED TO N.I.S.T. SPECIFICATIONS WITH CERTIFICATION THAT IS CURRENT. ISOLATE TRANSMITTER FROM THE REST OF SYSTEM. INSPECT ALL FITTINGS. AFTER TEST, OPEN TRANSMITTER VALVES AND CHECK ITS FITTINGS FOR LEAKS.
9. APPLY DI-WATER-CU AND FLOW DIRECTION LABELS TO BRANCHES.
10. MAINTAIN 8" MINIMUM STRAIGHT PIPE RUN UPSTREAM AND DOWNSTREAM OF FLOWMETER.

REFERENCE: FRONT END THERMAL ANALYSIS FOR NSLS-II (OCT. 26TH 2010). REVIEWED IN FRONT END FINAL DESIGN REVIEW.
https://ps.bnl.gov/acc/mech/frontends/Design%20Reviews/Final%20Design%20Review%2010-26-2010/Front%20End%20Thermal%20Analysis%2010-26-2010.pdf

UNLESS OTHERWISE SPECIFIED
ALL DIMENSIONS ARE IN INCHES
DIMENSIONS IN BRACKETS [x.xx] (WHERE PRESENT) ARE MILLIMETERS AND ARE FOR REFERENCE ONLY
INTERPRET DRAWING PER ASME Y14.5-1994 OR Y32.2-1975
DIMENSIONAL TOLERANCES: X. ± 0.060, .X ± 0.030, .XX ± 0.015, .XXX ± 0.005
ANGULAR TOLERANCE ± .5°
FINISH 125
BREAK EDGES & SHARP CORNERS 0.005 MIN. TO 0.030 MAX
THIRD ANGLE PROJECTION
SCALE: SEE DWG VIEW

BROOKHAVEN NATIONAL LABORATORY
BROOKHAVEN NATIONAL LABORATORY
BROOKHAVEN SCIENCE ASSOCIATES
UPTON, NEW YORK 11973
Exploring Life's Mysteries. Protecting its Future

NSLS II NATIONAL SYNCHROTRON LIGHT SOURCE II

DRAWN BY	FAUSSETE	6/1/2013
CHECKED BY	C. AMARITO	6/13
VACUUM APPROVAL	-	-
ENGINEER APPROVAL	DOOM	6/13
SUPERVISOR APPROVAL	SHARMA	6/13
ES&H APPROVAL	ACKERMAN	6/13
Q.A. APPROVAL	CHESWICK	6/13

STORAGE RING
FRONT END, UTILITIES
PIPING SCHEMATIC, LOW FLOW

SHEET SIZE: D
DRAWING/PART NUMBER: SR-FE-UT-0003
REVISION: J
WBS# 1.03.04.07.03
ESH&Q RISK LEVEL: A2
SHEET 1 OF 3

C:\Mech-Eng\LT\SR\FE\UT\SR-FE-UT-0003.dwg

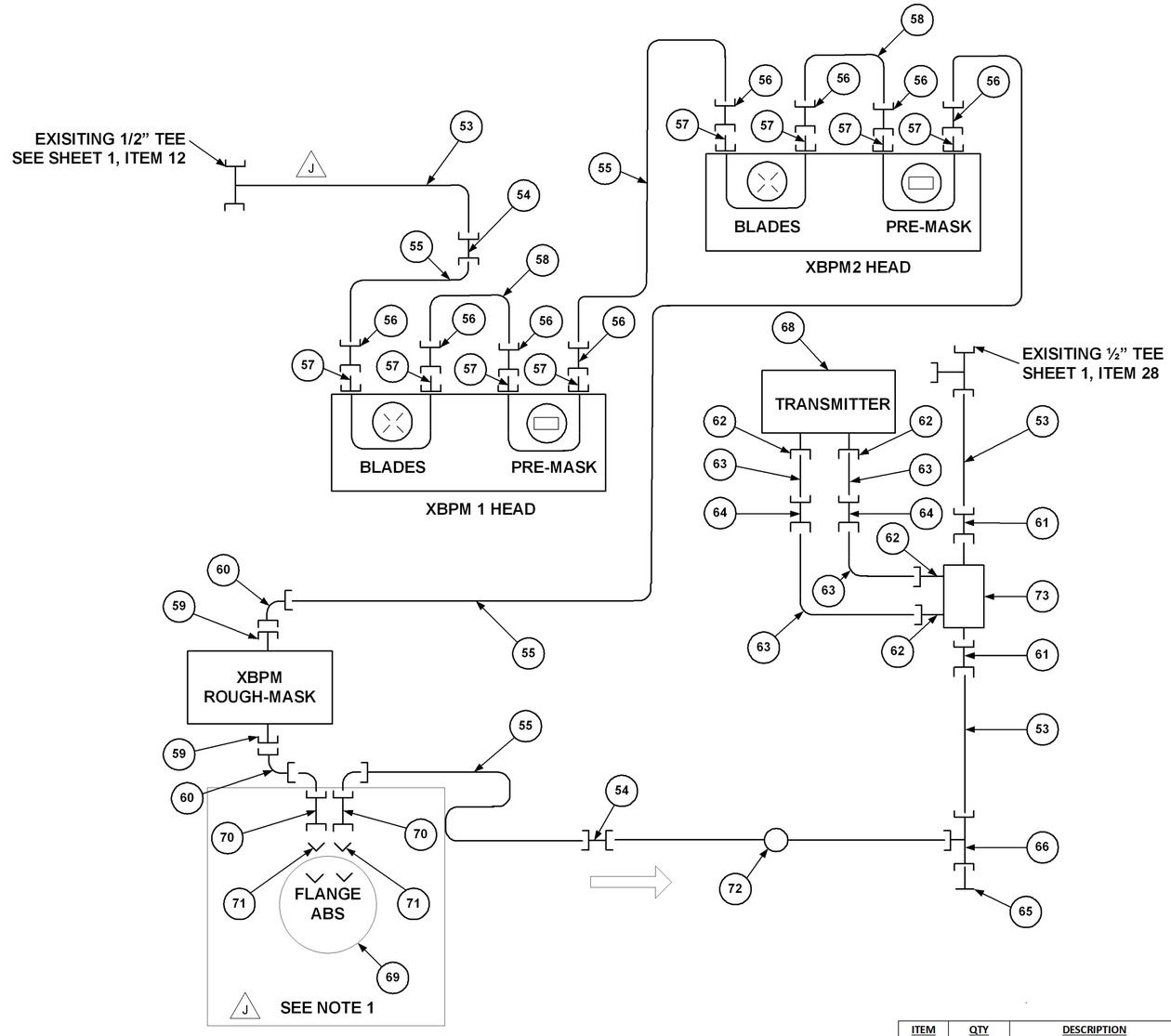

NOMINAL FLOW (GPM)	WARNING POINT (GPM)	TRIP POINT (GPM)
0.25 - 0.30 GPM	0.18 GPM	0.12 GPM

J

ITEM	QTY	DESCRIPTION	SIZE	PART NUMBER	VENDER
73	1	FLOWMETER		5300	ORIPAC
72	1	FLOW RESTRICTOR			
71	2	FLARETITE COPPER SEAL 37 DEG	3/8" AN	PI FTNGS-0168	SWAGELOK
70	2	MALE CONNECTOR, AN	1/2" COMP. X 3/8 AN	SS-810-6-6AN	SWAGELOK
69	1	FLANGE ABSORBER	FRONT ENDS, ABSORBER, 6"	SR-FE-ABS-1200	
68	1	TRANSMITTER	DIFFERENTIAL PRESSURE TRANSMITTER	EJA110E-JFS3G-712ED/FF1/D1	YOKOGAWA
67					
66	1	UNION "T"	1/2" COMP	SS-810-3	SWAGELOK
65	1	PLUG	1/2"	SS-810-P	SWAGELOK
64	2	CONNECTOR	1/4" COMP X 1/4" COMP	SS-400-6	SWAGELOK
63	AR	TUBE	1/4" TUBE, 304 STAINLESS STEEL, ANNEALED		
62	2	CONNECTOR	1/4" COMP X 1/4" NPTM	SS-400-1-4	SWAGELOK
61	2	CONNECTOR	1/2" COMP X 1/2" NPTF	SS-810-7-8	SWAGELOK
60	2	UNION	1/2" COMP UNION ELBOW	SS-810-9	SWAGELOK
59	2	CONNECTOR	1/2" TUBE X 3/8" NPTM	SS-8-TA-1-6	SWAGELOK
58	1	HOSE	1/2" X 24" SS BRD HOSE W/ 1/2" OD SS TUBE ENDS	SS-FJ8TA8TA8-24	SWAGELOK
57	4	CONNECTOR	10mm TUBE X 1/4 NPTM	SS-10-MTA-1-4	SWAGELOK
56	4	CONNECTOR	1/2" COMP. X 1/4" NPTF	SS-810-7-4	SWAGELOK
55	1	HOSE	1/2" X 48" LG. SS BRD HOSE W/ 1/2" OD SS TUBE ENDS	SS-FJ8TA8TA8-48	SWAGELOK
54	2	MALE CONNECTOR	1/2" COMP. X 1/2" COMP	SS-810-6	SWAGELOK
53	AR	TUBE	1/2" TUBE, 304 STAINLESS STEEL, ANNEALED		
52					
51					
50					

J

NOTES:
1. INSTALL AT ID-03, PER SR-FE-IVUN0-1100 AND ID-16, PER SR-FE-IVU16-1000 ONLY J

D	SR-FE-UT-0003	J
SHEET SIZE	DRAWING/PART NUMBER	REVISION
ESH&Q RISK LEVEL A2	SHEET 2 OF 3	

C:\Mech-Eng\LT\SR\FE\UT\SR-FE-UT-0003.tdw

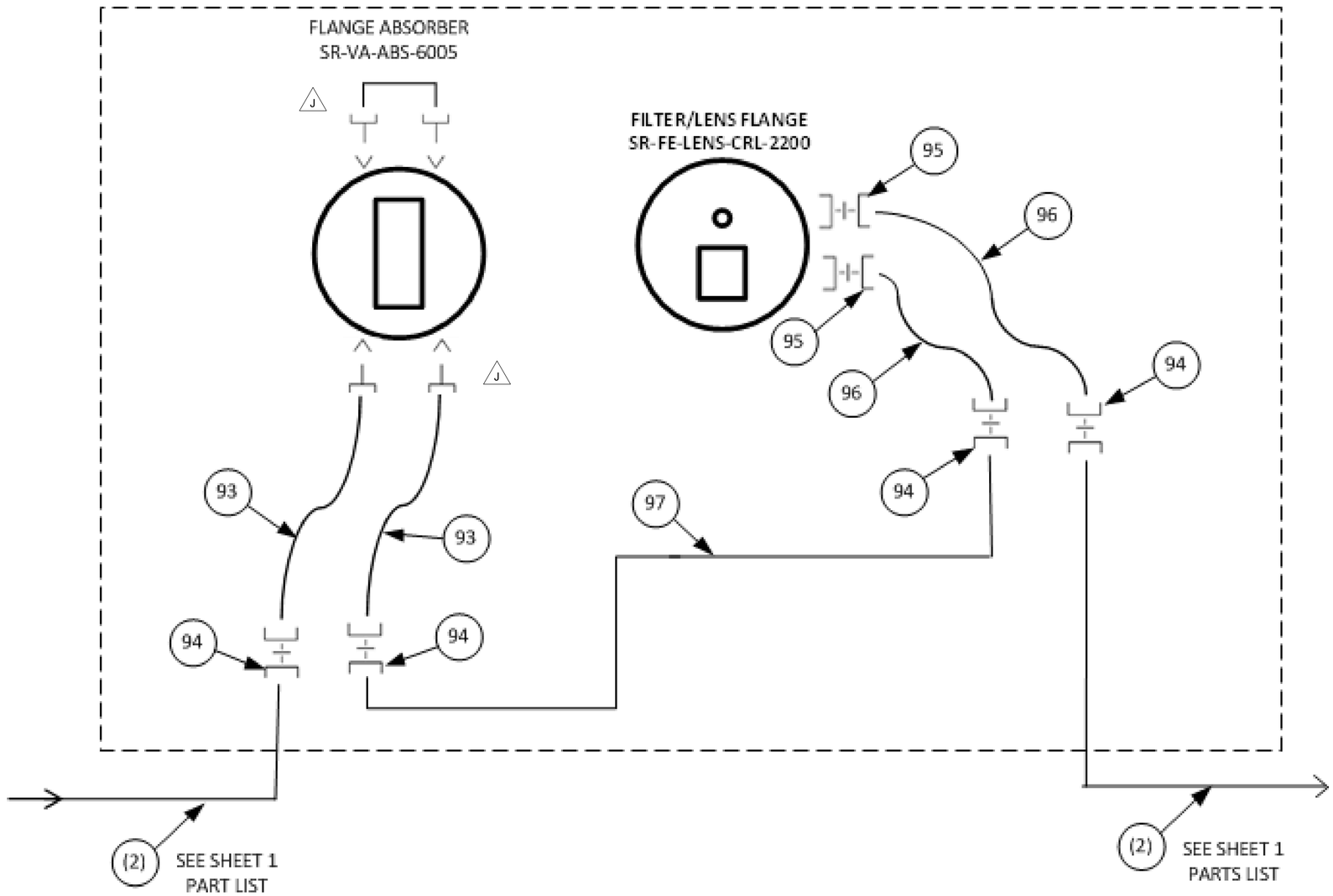

NOTES:
1. INSTALL AT ID-10, PER SR-FE-IVUN0-1100 ONLY J

ITEM	QTY	DESCRIPTION	SIZE	PART NUMBER	VENDER
97	AR	TUBE	3/8" OD, 0.035" WALL, ST STL 304/304L		
96	2	HOSE ASSY, BRAIDED SS	3/8" TUBE x 3/8" TUBE x 36" LONG	SR-FE-LENS-CRL-2028	TEK STAINLESS
95	2	UNION (REDUCER, BULKHEAD)	1/4" COMP. x 3/8" COMP.	SS-600-61-4	SWAGELOK
94	4	UNION (STRAIGHT, BULKHEAD)	3/8" COMP x 3/8" COMP	SS-600-61	SWAGELOK
93	2	HOSE ASSY, BRAIDED SS	3/8" TUBE x 3/8" TUBE x 22" LONG	SR-FE-LENS-CRL-2027	TEK STAINLESS

D (SHEET SIZE)	SR-FE-UT-0003 (DRAWING/PART NUMBER)	J (REVISION)
ESH&Q RISK LEVEL A2	SHEET 3 OF 3	

C:\Mech-Eng\LTS\RF\EUT\SR-FE-UT-0003.dw