NSLS II 21-ID ESM Beam Line Personal Protection System Certification Validation Check List
G. Ganetis 6/20/2016

Beam Line __21-ID_ESM_____

The following check list represents the documents and tasks that summarize the review the evaluator has done for a NSLS II Beam Line Personal Protection System:

Document or Task	**Documents Reviewed**	**Checked**	**Comments**
Beam Line Logic Diagram	LT-EL-BL-EI-PPS-1210-96_REV-A.pdf		
Front End Logic Diagram	LT-EL-BL-EI-PPS-0101-92_REV-D.pdf		
Beam Line Logic Diagram reviewed by PS Radiation Safety Committee (Sub Committee)	logic_4id_21id_17bm_2016.pdf		
Electrical Schematics First Optical Enclosure Water Flow Trip Amplifiers Front End –Network/ System Front End-SR 21 I/O Box	 LT-EL-BL-EI-PPS-1210-91_REV-A.pdf LT-EL-BL-EI-PPS-1210-92_REV-A.pdf LT-EL-BL-EI-PPS-0101-90 _REV-A.pdf LT-EL-BL-EI-PPS-0101-91_REV-A.pdf LT-EL-SR-EI-PPS-0221-90 _REV-E.pdf		 (A Chain) (B Chain)
Certification Test Procedure with executed check lists. ID 21 PPS Rad Interlock Cert Check List Addendum	PS-C-XFD-PRC-059(Procedure) 21-ID Interlock Test Checklist 5.23.16.pdf Addendum to 21-ID Radiological Interlock Test X.X.2016.pdf		 Final test of PPS Water Interlock
Beam Line Tour & Secure Demonstration			
Mechanical Inspection reports for Beam line Hutch Doors	21 ID Mech Inspec Door Switch 6_10_16.pdf		
Design Description for Beam Lines and Front End PPS	PS-C-XFD-SPC-PPS-001		(Copies available upon request)
Maintenance Procedures	PS-C-XFD-PRC-023		(Copies available upon request)
Network Isolation Test Procedure	PS-C-XFD-PRC-022		(Copies available upon request)
PPS Equipment Layout Drawing	LT-EL-BL-EI-HCH-1210-REV-A.pdf		

Inspection/Test Record

BROOKHAVEN NATIONAL LABORATORY

Photon Sciences Directorate
National Synchrotron Light Source II

Document Title: **Hutch Door PPS Mechanical Inspection (Caratelli Rolling Door)**

Beamline: 21-ID-A

Door Location: FOE
(hutch, and location on hutch)

Type: Left / Right
(circle one)

Reference Names / Nomenclature

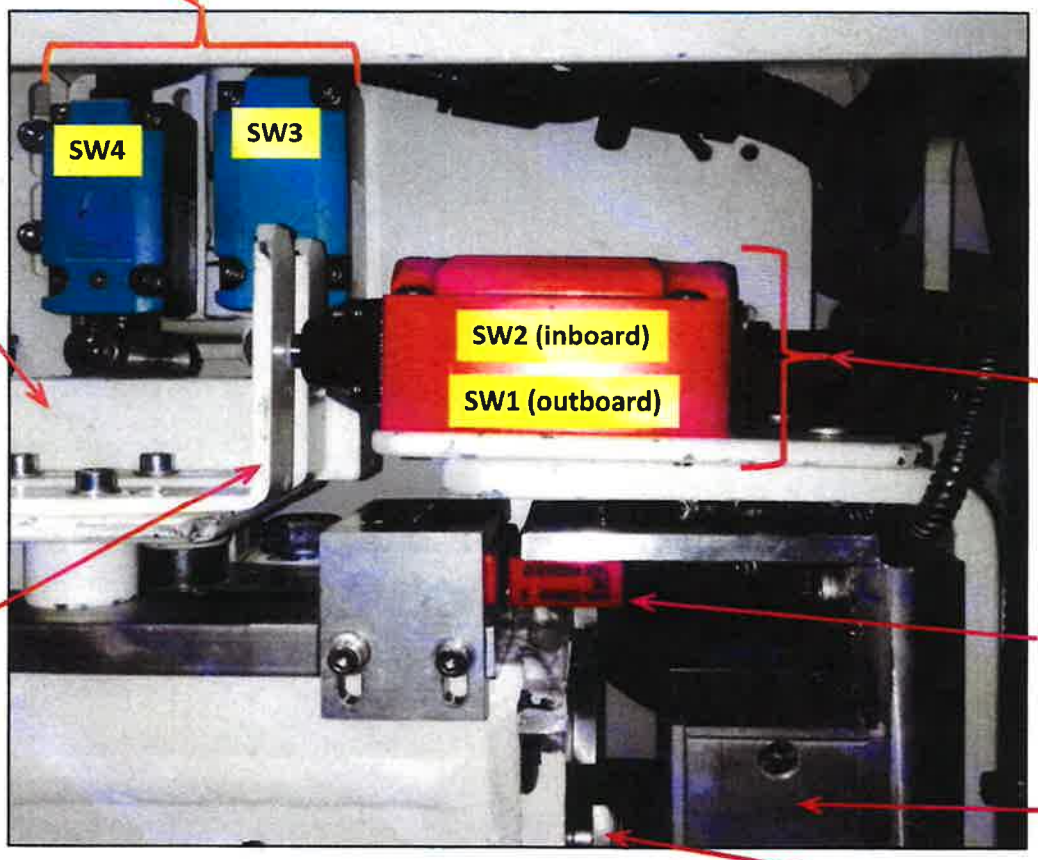

(Left-hand door shown above, right-hand is similar, mirror image)
(right-hand door is simpler, lacking pneumatic drive components)

Op #

1) Allen Bradley Switch Projection (Inspect while the door is open)

ID	Inspection Description	Switch Designation	Specification	Measured Value	Pass/Fail	DR #	Name/Life #	Date
1a	**Allen Bradley Plunger Projection** (Plunger fully Open)	SW1	.40" (+/- .02")	.40	Pass		T.O. T. Oldham 25596	4/21/16
		SW2	.40" (+/- .02")	.40	Pass			
1b	**Allen Bradley Plunger Projection** (Plunger fully compressed)	SW1	.08" (+/- .02")	.08	Pass			
		SW2	.08" (+/- .02")	.08	Pass			

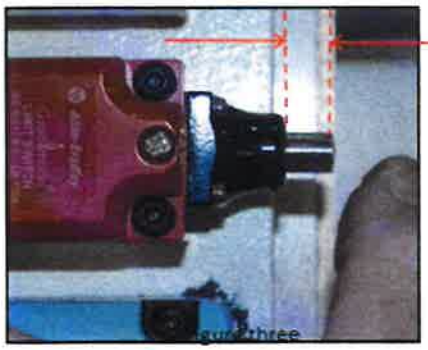

Projection from switch body (fully open)

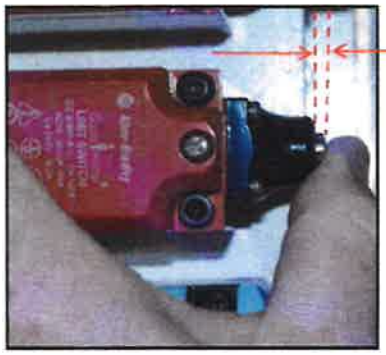

Projection from switch body (fully closed)

2) Siemens Switch Orientation (Inspect while the door is open)

ID	Inspection Description	Switch Designation	Specification	Measured Value	Pass/Fail	DR #	Name/Life #	Date
2a	**Siemens Strike Angle** (Switch open orientation)	SW3	6° (+/- 3°)	5°	Pass		T. Oldham 25596	4/21/16
		SW4	6° (+/- 3°)	5°	Pass			

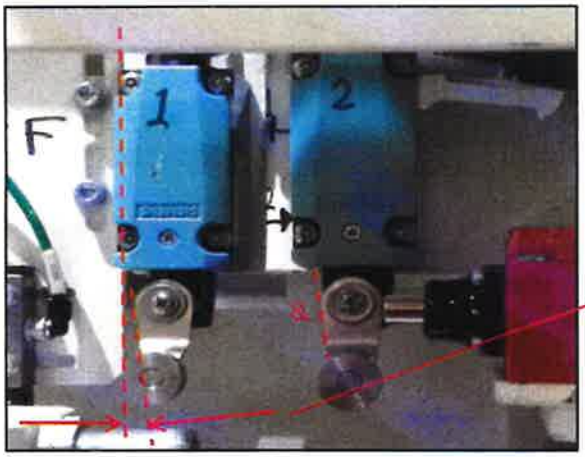

Measure angle with an inclinometer, from side of steel support bracket to closer side of switch arms, with the switch in its free state, avoiding contact with roller or other components.

3) Switch Mechanical Operation (Inspect while the door is open)

ID	Inspection Description	Switch Designation	Does Switch Operate Freely (Yes)	Does Switch Operate Freely (No)	Pass/Fail	DR #	Name/ Life #	Date
3a	**Allen Bradley Plunger Operation** (using your finger, fully depress the Plunger 3-5 times)	SW1	Yes		Pass		T. Oldham 4/21/16 25596	4/21/16
		SW2	Yes		Pass			
3b	**Siemens Arm Operation** (using your finger, fully rotate the arm 3-5 times)	SW3	Yes		Pass			
		SW4	Yes		Pass			

Op #

4) Allen Bradley Plunger Projection Upon Door Closure (Inspect while the door is fully closed)

ID	Inspection Description	Switch Designation	Specification	Measured Value	Pass/Fail	DR #	Name/ Life #	Date
4a	**Measure Allen Bradley struck Plunger Projection** (distance between "switch-body" and Striker Bracket when the door is closed)	SW1	.18" (+/- .05)	.14	PASS		T. Oldham 25596	4/21/16
		SW2	.18" (+/- .05)	.14	PASS			

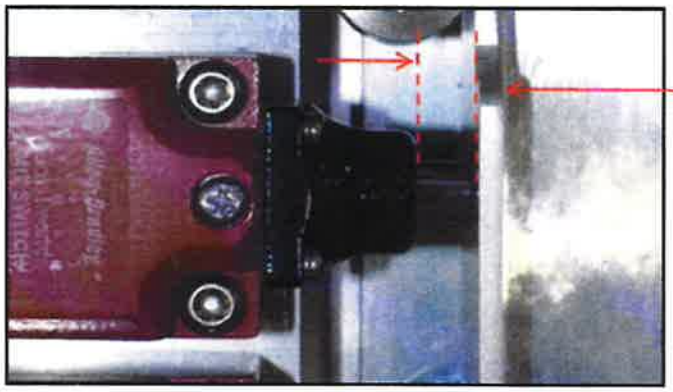

.18" +/-.050
(Clearance at closure)

5) Siemens Plunger Projection Upon Door Closure (Inspect while the door is fully closed)

ID	Inspection Description	Switch Designation	Specification	Measured Value	Pass/Fail	DR #	Name/ Life #	Date
5a	**Measure Siemens close angle** (Struck switch when the door is fully closed)	SW3	104° (+/- 4°)	105°	PASS		T. Oldham 25596	4/21/16
		SW4	104° (+/- 4°)	105°	PASS			

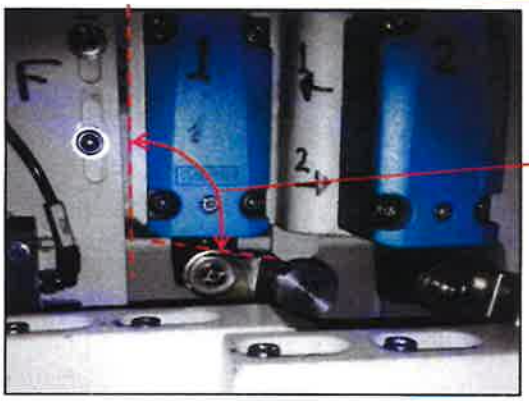

Measure angle with an inclinometer, from side of steel support bracket to closer side of switch arms, with the switch in its free state, avoiding contact with roller or other components.

6) Clearance Between Reed Switch Sensor and Actuator (Inspect while the door is fully closed)

ID	Inspection Description	Specification	Measured Value	Pass/Fail	DR #	Name/ Life #	Date
6a	**Measure clearance between the Reed Switch Sensor and Actuator**	1/8" (max)	1/16"	PASS		T. Oldham 25596	4/21/16

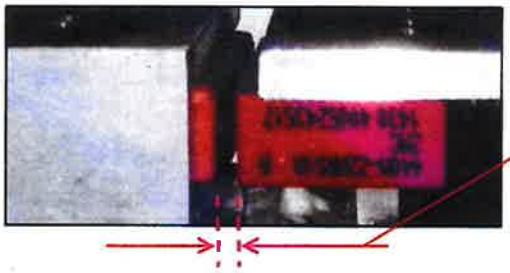

1/8" max clearance
(between Sensor & Actuator)

As viewed from outboard, under switches

Op #

7) Verify Contact Between the Mag-Lock and Armature (Inspect while the door is fully closed)

ID	Inspection Description	Specification	Pass/Fail	DR #	Name/ Life #	Date
7a	**Verify full contact between the Mag-Lock and Armature.** (measure when door is fully closed)	No visible Gaps	PASS		T.Oldham 25596	4/21/16

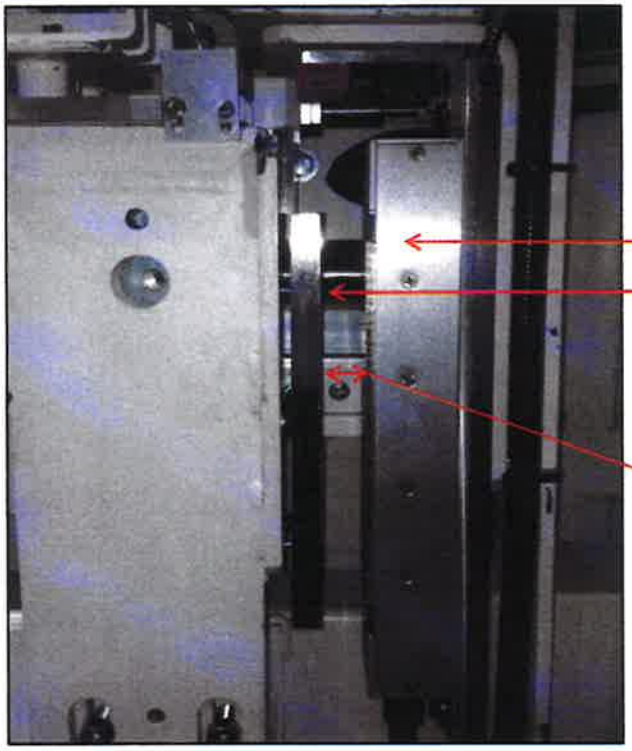

Note:
Shown partially open. There should be no gap between maglock and armature when the door is shut.

8) Verify Integrity of Mechanical Installation (Inspect while the door is open)

ID	Inspection Description	Component	Pass/Fail	DR #	Name/ Life #	Date
8a	**Proper mounting of Switches** (Verify that all four limit switches are properly secured and all mounting hardware is in place)	SW1	PASS		T.Oldham 25596	4/21/16
		SW2	PASS			
		SW3	PASS			
		SW4	PASS			
8b	**Switch cover installation** (Verify that each switch cover is installed and the mounting screws are in place)	SW1	PASS		T.Oldham 25596	4/21/16
		SW2	PASS			
		SW3	PASS			
		SW4	PASS			

ID	Inspection Description	Component	Pass/Fail	DR #	Name/ Life #	Date
8c	**Proper mounting of Reed Switch** (Verify that both "Reed Switch" components are properly secured and all mounting hardware is in place)	Sensor	PASS		T. Oldham 25596	4/21/16
		Actuator	PASS			
8d	**Proper mounting of Mag-Lock Assembly.** (Verify Mag-Lock components are properly secured and all mounting hardware is in place)	Mag-Lock	PASS		T. Oldham 25596	4/21/16
		Armature	PASS			
8e	**Proper installation of the Striker Bracket** (Verify the Striker Bracket has been properly secured and all mounting hardware is in place)	Striker	PASS		T. Oldham 25596	4/21/16

Notable Observations (if any)

Submitted By:

Tim Oldham
Ed Wiegand
Print Name

4/21/16
4-21-16
Signature / Date

Approvals (ready for certification)

Cognizant Engineer:

Steve O'Hara
Approved By (Print Name)

5/6/2016
Signature / Date

Inspection/Test Record

BROOKHAVEN NATIONAL LABORATORY

Photon Sciences Directorate
National Synchrotron Light Source II

Document Title: **Hutch Door PPS Mechanical Inspection (Caratelli Rolling Door)**

Beamline: 21-ID-A

Door Location: FOE
(hutch, and location on hutch)

Type: Left / Right
(circle one)

Reference Names / Nomenclature

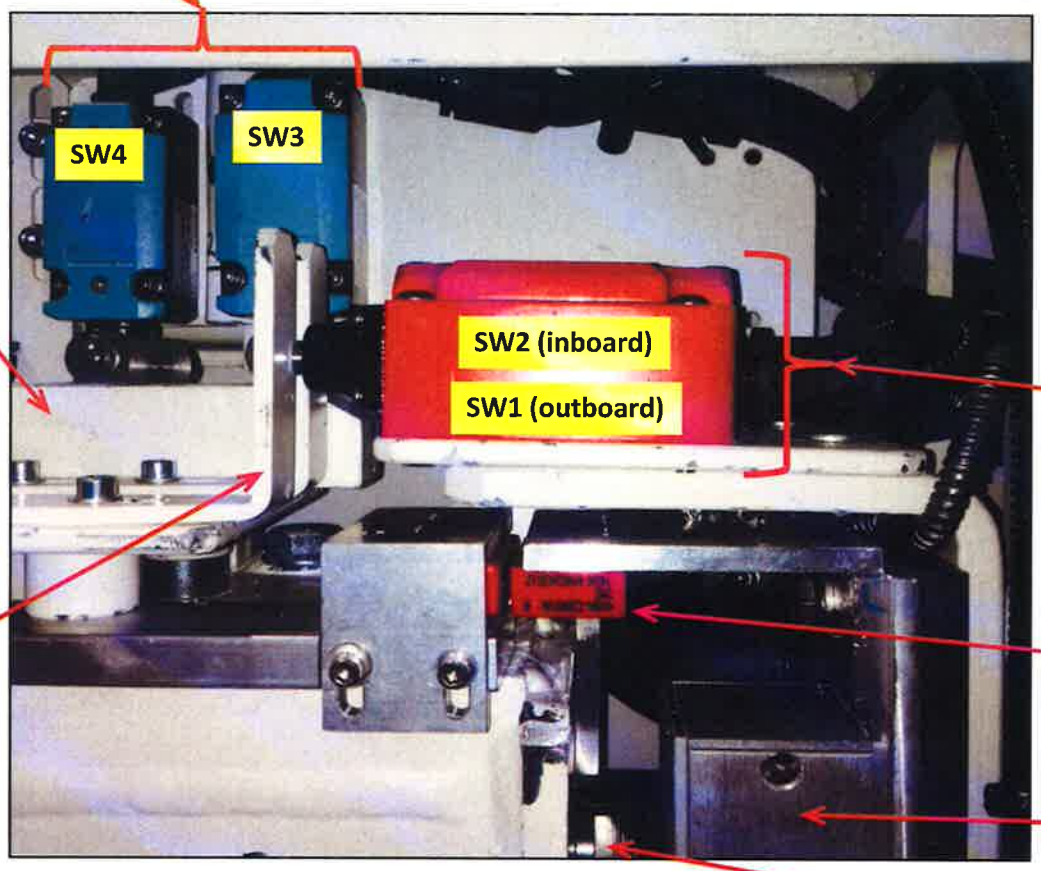

(Left-hand door shown above, right-hand is similar, mirror image)
(right-hand door is simpler, lacking pneumatic drive components)

Op #

1) Allen Bradley Switch Projection (Inspect while the door is open)

ID	Inspection Description	Switch Designation	Specification	Measured Value	Pass/Fail	DR #	Name/Life #	Date
1a	**Allen Bradley Plunger Projection** (Plunger fully Open)	SW1	.40" (+/- .02")	.40	PASS		T. Oldham 25596	4 21 16
		SW2	.40" (+/- .02")	.40	PASS			
1b	**Allen Bradley Plunger Projection** (Plunger fully compressed)	SW1	.08" (+/- .02")	.08	PASS			
		SW2	.08" (+/- .02")	.08	PASS			

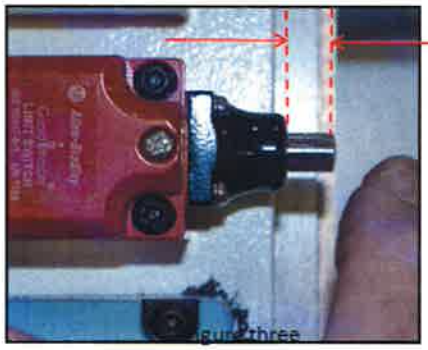

Projection from switch body (fully open)

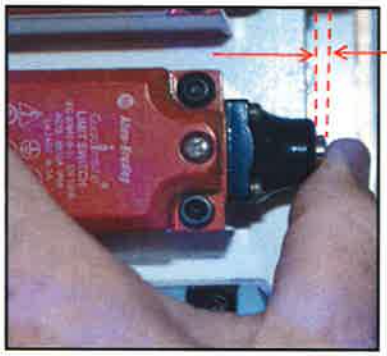

Projection from switch body (fully closed)

2) Siemens Switch Orientation (Inspect while the door is open)

ID	Inspection Description	Switch Designation	Specification	Measured Value	Pass/Fail	DR #	Name/Life #	Date
2a	**Siemens Strike Angle** (Switch open orientation)	SW3	6° (+/- 3°)	5°	PASS		T. Oldham 25596	4/21/16
		SW4	6° (+/- 3°)	5°	PASS			

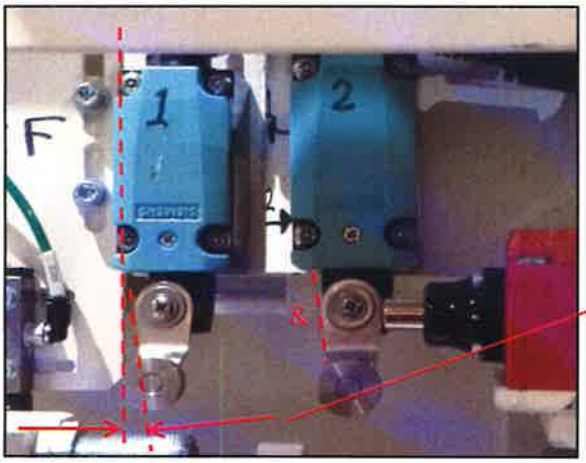

Measure angle with an inclinometer, from side of steel support bracket to closer side of switch arms, with the switch in its free state, avoiding contact with roller or other components.

3) Switch Mechanical Operation (Inspect while the door is open)

ID	Inspection Description	Switch Designation	Does Switch Operate Freely (Yes)	(No)	Pass/Fail	DR #	Name/ Life #	Date
3a	**Allen Bradley Plunger Operation** (using your finger, fully depress the Plunger 3-5 times)	SW1	Yes		PASS		Tim Oldham 25596	4/21/16
		SW2	Yes		PASS			
3b	**Siemens Arm Operation** (using your finger, fully rotate the arm 3-5 times)	SW3	Yes		PASS			
		SW4	Yes		PASS			

Op #

4) Allen Bradley Plunger Projection Upon Door Closure (Inspect while the door is fully closed)

ID	Inspection Description	Switch Designation	Specification	Measured Value	Pass/Fail	DR #	Name/ Life #	Date
4a	**Measure Allen Bradley struck Plunger Projection** (distance between "switch-body" and Striker Bracket when the door is closed)	SW1	.18" (+/- .05)	.20	Pass		T. Oldham 25596	4/21/16
		SW2	.18" (+/- .05)	.20	Pass			

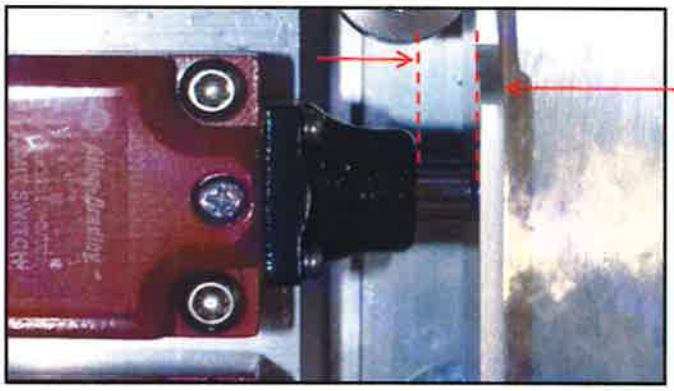

.18" +/-.050
(Clearance at closure)

5) Siemens Plunger Projection Upon Door Closure (Inspect while the door is fully closed)

ID	Inspection Description	Switch Designation	Specification	Measured Value	Pass/Fail	DR #	Name/ Life #	Date
5a	**Measure Siemens close angle** (Struck switch when the door is fully closed)	SW3	104° (+/- 4°)	105°	Pass		T. Oldham 25596	4/21/16
		SW4	104° (+/- 4°)	105°	Pass			

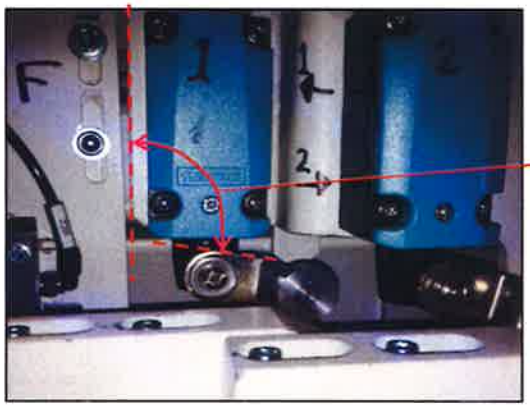

Measure angle with an inclinometer, from side of steel support bracket to closer side of switch arms, with the switch in its free state, avoiding contact with roller or other components.

6) Clearance Between Reed Switch Sensor and Actuator (Inspect while the door is fully closed)

ID	Inspection Description	Specification	Measured Value	Pass/Fail	DR #	Name/ Life #	Date
6a	**Measure clearance between the Reed Switch Sensor and Actuator**	1/8" (max)	3/64 ths	Pass		T. Oldham 25596	4/21/16

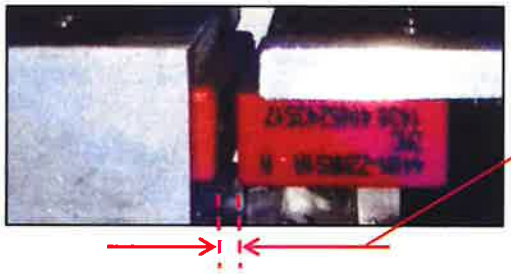

1/8" max clearance
(between Sensor & Actuator)

As viewed from outboard, under switches

Op #

7) Verify Contact Between the Mag-Lock and Armature (Inspect while the door is fully closed)

ID	Inspection Description	Specification	Pass/Fail	DR #	Name/ Life #	Date
7a	**Verify full contact between the Mag-Lock and Armature.** (measure when door is fully closed)	No visible Gaps	PASS		T. Oldham 25596	4/21/16

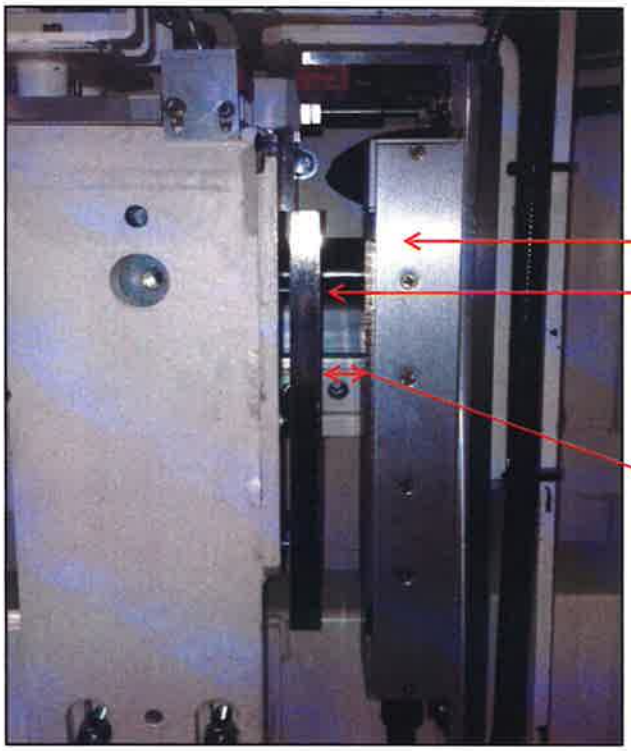

Note:
Shown partially open. There should be no gap between maglock and armature when the door is shut.

8) Verify Integrity of Mechanical Installation (Inspect while the door is open)

ID	Inspection Description	Component	Pass/Fail	DR #	Name/ Life #	Date
8a	**Proper mounting of Switches** (Verify that all four limit switches are properly secured and all mounting hardware is in place)	SW1	PASS		T. Oldham 25596	4/21/16
		SW2	PASS			
		SW3	PASS			
		SW4	PASS			
8b	**Switch cover installation** (Verify that each switch cover is installed and the mounting screws are in place)	SW1	PASS		T. Oldham 25596	4/21/16
		SW2	PASS			
		SW3	PASS			
		SW4	PASS			

ID	Inspection Description	Component	Pass/Fail	DR #	Name/ Life #	Date
8c	**Proper mounting of Reed Switch** (Verify that both "Reed Switch" components are properly secured and all mounting hardware is in place)	Sensor	PASS		T. Oldham 25596	4/21/16
		Actuator	PASS			
8d	**Proper mounting of Mag-Lock Assembly.** (Verify Mag-Lock components are properly secured and all mounting hardware is in place)	Mag-Lock	PASS		T. Oldham 25596	4/21/16
		Armature	PASS			
8e	**Proper installation of the Striker Bracket** (Verify the Striker Bracket has been properly secured and all mounting hardware is in place)	Striker	PASS		T. Oldham 25596	4/21/16

Notable Observations (if any)

Submitted By:

Tim Oldham — 4/21/16

Ed Weigand — 4-21-16

Print Name — *Signature / Date*

Approvals (ready for certification)

Cognizant Engineer: Steve O'Hara — 6/6/2016

Approved By (Print Name) — *Signature / Date*

National Synchrotron Light Source

Building 743, National Synchrotron Light Source
Brookhaven National Laboratory
Upton, NY 11973-5000
Phone 631 344-2117
Fax 631 344-3238
zhong@bnl.gov

managed by Brookhaven Science Associates
for the U.S. Department of Energy

Memo

Date: June 17, 2016
To: George Ganetis, and Scott Buda
From: Zhong Zhong (chair), Photon Science Radiation Safety Committee
Subject: Radiation Safety Committee endorsement of the PPS design of 4-ID and 21-ID and 17-BM beamlines

Dear George and Scott

I would like to thank you for inviting the RSC sub-committee for PPS (personal protection system) interlock, Mohamed Benmerrouche, Dana Beavis, Robert Lee, and myself, to the review of the PPS logic diagrams for 4-ID (ISR), 21-ID (ESM), 17-BM (XFP) beamlines. We reviewed the following logic diagrams, sent beforehand.

For 21-ID

1. LT_EL-BL-EI-PPS-1210-96 Rev.A, Wiring diagram 21-ID FOE search logic
2. LT-EL-BL-EI-PPS-1210-91 Rev. A. 21-ID A chain logic, B chain logic, FOE, C chain shutter control, C chain door control FOE, faults and alarms A chain, faults and alarms B chain.

For 17-BM

3. LT-EL-BL-EI-PPS-2170-96 rev. A, 17-BM FOE search logic, 17-BM FOE A chain logic, B chain logic, C chain shutter control, C chain door control FOE, faults and alarms A chain, faults and alarms B chain.

For 4-ID

4. LT-EL-BL-EI-PPS-1040-96, rev. A. 4-ID FOE search logic, A chain logic, B chain logic, C chain shutter control, C chain door control FOE, EESE B search logic, EESE B A chain logic, EESE B B chain logic, EESE B C chain door control, EESE C search logic, EESE C A chain logic, EESE C B chain logic, EESE C C chain door control, EESE D search logic, EESE D A chain logic, EESE D B chain logic, EESE D C chain door control, faults and alarms A chain, faults and alarms B chain.

We met with Scott Buda on June 7, 2016, amidst pouring rain, to discuss the drawings. 4-ID consists of 4 hutches in tandem, with a removable beam-stop between hutches C and D. The design concept is similar to that of XPD, in operation for 2 years. 21-ID, a soft x-ray beamline, consists of a standard FOE followed by beam-transport and endstations on the experimental floor. The pink-beam transport and endstations are protected by SIL-3 rated vacuum switches. The vacuum switches close the shutter upstream in the event of a vacuum loss; and dump the storage ring beam if the shutter fails to close in 3 seconds. 17-BM has a standard bending magnet FOE that serves as experimental hutch.

While the IWG should be the primary reviewer for interlock logic diagrams, the RSC brings in broader expertise in areas such as radiation physics and PS shielding policy. This review by the RSC sub-committee compliments the recent shielding and ray-tracing reviews of the three beamlines by the RSC.

As a result of the sub-committee review, the RSC concurs that the PPS designs of 4-ID, 21-ID, and 17-BM meet Photon Sciences shielding policy.

Our suggestions for improvements are listed below

1. For 4-ID, please change LIS3 (2 occurances) on page 2 to LIS2.
2. For 21-ID, please change “FOE A shutter” to “FOE shutter A” to be consistent.

Radiation Safety Committee

Name	*Expertise*	*Directorate*
Andrew Ackerman	Deputy ESH Manager	PS
Dana Beavis	Experimental Nuclear Particle Physics	NPP
Mohamed Benmerrouche	Nuclear and Radiation Physics	PS
Scott Buda	Personnel Protective Systems	PS
Ray Fliller	Accelerator Physicist	PS
Wah-Keat Lee	Beam Line Physicist	PS
Boris Podobedov	Accelerator Physics	PS
Chuck Schaefer	Accelerator SME	ESH
Om Singh	Accelerator Controls	PS
Lutz Wiegart	Beam Line Physicist	PS
Zhong Zhong	Beam Line Physicist	PS
Emil Zitvogel	Accelerator Operations	PS
Tammy Stein	Administrative Support	PS

Ray-tracing sub-committee

Andrew Ackerman	Deputy ESH Manager	PS
Mary Carlucci-Dayton	Mechanical Engineer	PS
Wah-Keat Lee	Beam Line Physicist	PS
Chuck Schaefer	Accelerator SME	ESH
Christopher Stelmach	Designer	PS
Lutz Wiegart	Beam Line Physicist	PS
Zhong Zhong	Beam Line Physicist	PS

PPS sub-committee

Dana Beavis	Experimental Nuclear Particle Physics	NPP
Mohamed Benmerrouche	Nuclear and Radiation Physics	PS
Scott Buda	Personnel Protective Systems	PS
Robert Lee	ESH manager	PS
Zhong Zhong	Beam Line Physicist	PS

REV	DESCRIPTION	DATE	BY	CHK	APP
A	INITIAL RELEASE	06/08/2016	SEJ	JM	SB

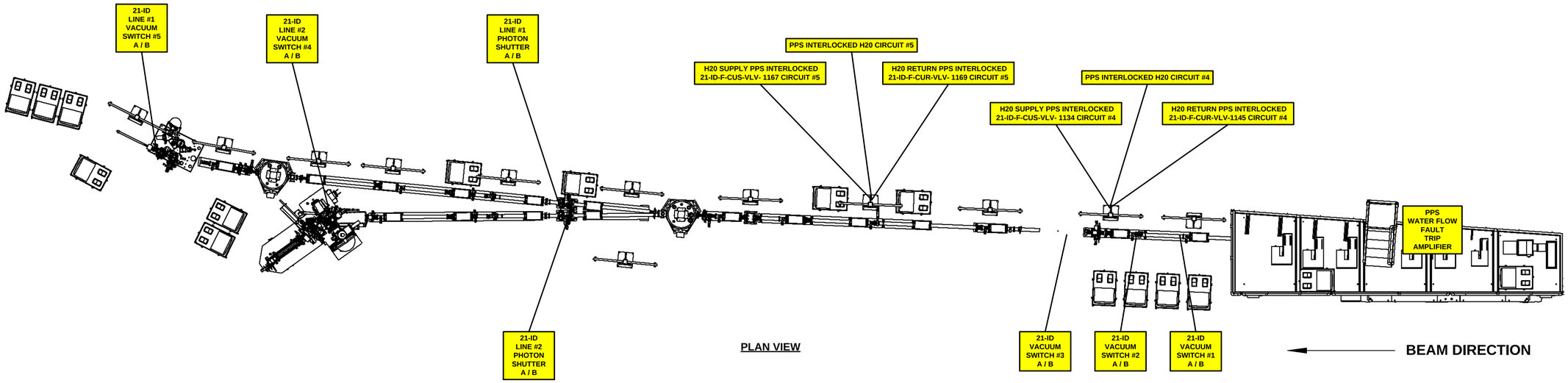

PLAN VIEW

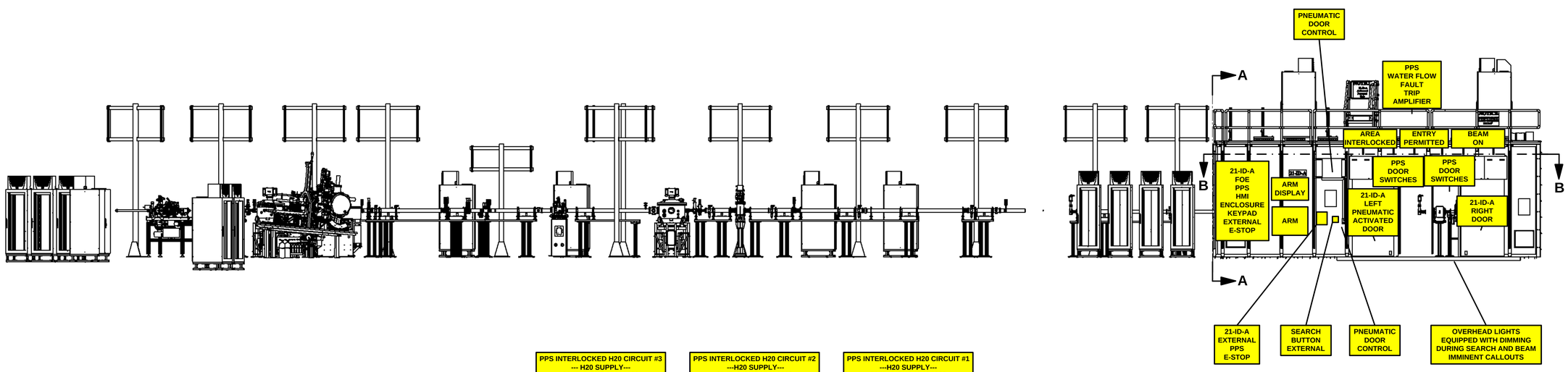

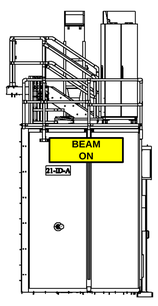

VIEW A-A

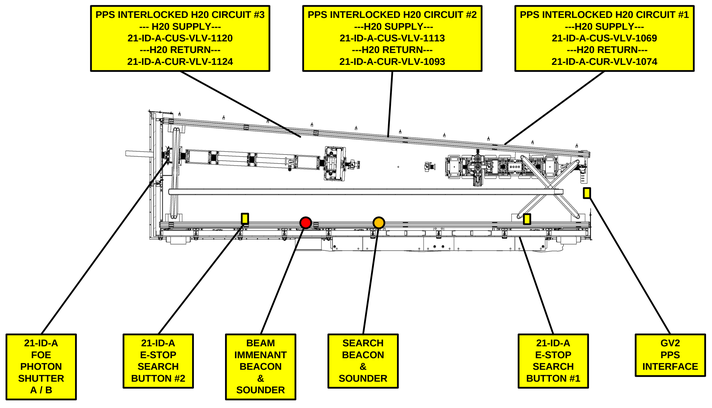

SECTION B-B

BROOKHAVEN NATIONAL LABORATORY

BROOKHAVEN NATIONAL LABORATORY
BROOKHAVEN SCIENCE ASSOCIATES
UPTON, NEW YORK 11973
Exploring Life's Mysteries, Protecting its Future

NSLSII NATIONAL SYNCHROTRON LIGHT SOURCE II

UNLESS OTHERWISE SPECIFIED
INTEGER TOLERANCES ± .06
DECIMAL TOLERANCES
.X ± .030
.XX ± .015
.XXX ± .010
ANGULAR TOLERANCE ± 0.5°
UNSPECIFIED RADII .02 MAX
125 FINISH — BREAK SHARP CORNERS AND EDGES MAX .03 MIN .005

UNLESS OTHERWISE SPECIFIED DIMENSIONS ARE IN INCHES
U. DIMENSIONS IN 2 ¹/₂ ARE MILLIMETERS EQUIV. FOR REF. ONLY

ESH&Q RISK LEVEL A-2

INTERPRET DRAWING AS PER ANSI Y14.5 OR Y32.2

		DATE
DRWN BY	S. JARZABKOWSKI	6/08/2016
CHK BY	J. MALLEY	6/09/2016
ENG APP	S. BUDA	6/08/2016
SUPV APP	G. GANETIS	6/10/2016
QA APP	E. CHESWICK	6/09/2016
ESH APP	R. LEE	6/09/2016

OUTSTANDING ECN'S

EQUIPMENT LAYOUT DRAWING, FOR 21-ID HUTCH (ESM)

JOB NUMBER | USED ON DWG. NO.

DRAWING DIRECTORY: LT-EL-BL-EI
DRAWING NUMBER: LT-EL-BL-EI-HCH-1210
REV: A

COMPUTER REPRODUCABLE | SCALE: N/A | SHEET 1 OF 1

LT-EL-BL-EI-HCH-1210

FIRMWARE/SOFTWARE/PROGRAMMING LOGIC

DESCRIPTION:

FRONT END PPS MAIN CPU PROGRAM PENTANT 5 A CHAIN

PROGRAM	**Siemens Step 7**	
VERSION	**V5.5 + SP4**	
DEVICE	**SIEMENS CPU 319-3 PN/DP**	
OPERATING SYSTEM	**WINDOWS**	
PROGRAMMING METHOD	**SIEMENS STEP 7**	
FILE	**Pentant_5_Front End _Rev C**	

REV	DESCRIPTION	BY	DATE	CHK	APP
A	INITIAL RELEASE	MP	12/15/14	JM	SB
B	REVISED PER ECN 016-1453	MP	03/01/16	JM	SB
C	REVISED PER ECN 016-1461	MP	06/03/16	JM	SB

LT-EL-BL-EI-PPS-0101-74

BROOKHAVEN NATIONAL LABORATORY

BROOKHAVEN NATIONAL LABORATORY
BROOKHAVEN SCIENCE ASSOCIATES
UPTON, NEW YORK 11973
Exploring Life's Mysteries, Protecting its Future

NSLS II
NATIONAL SYNCHROTRON LIGHT SOURCE II

UNLESS OTHERWISE SPECIFIED
INTEGER TOLERANCES
± .06
DECIMAL TOLERANCES
.X ± .030
.XX ± .015
.XXX ± .010
ANGULAR TOLERANCE ± 0.5°
UNSPECIFIED RADII .02 MAX
125 BREAK SHARP CORNERS AND EDGES
FINISH MAX .03 MIN .005

UNLESS OTHERWISE SPECIFIED
DIMENSIONS ARE IN INCHES
DIMENSIONS IN [ ] ARE
MILLIMETERS EQUIV. FOR REF. ONLY

ESH&Q RISK LEVEL A-1

INTERPRET DRAWING AS PER ANSI Y14.5 OR Y32.2

OUTSTANDING ECNS

		DATE
DRWN BY	S.BUDA	12/15/14
CHK BY	M.PFEFFER	12/15/14
ENG APP	S.BUDA	12/15/14
SUPV APP	G.GANETIS	01/07/15
QA APP	E.CHESWICK	12/16/14
ESH APP	B.LEE	**12/16/14**

PROGRAMMABLE LOGIC

NSLS-II-PENTANT 5 FRONT END PPS CPU A CHAIN

LT-EL-BR-IN (DRAWING DIRECTORY)	LT-EL-BL-EI-PPS-0101-74 (DRAWING NUMBER)	C (REV)
COMPUTER REPRODUCIBLE	SCALE: N/A	SHEET 1 OF 1

JOB NUMBER	USED ON DWG. NO.

FIRMWARE/SOFTWARE/PROGRAMMING LOGIC

DESCRIPTION:

FRONT END PPS MAIN CPU PROGRAM PENTANT 5 B CHAIN

PROGRAM	**RSLOGIX 5000**	
VERSION	**20.03**	
DEVICE	**ALLEN BRADLEY 1768 L43S**	
OPERATING SYSTEM	**WINDOWS**	
PROGRAMMING METHOD	**ETHERNET**	
FILE	**LT-EL-BL-EI-PPS-0101-84.ACD**	

REV	DESCRIPTION	BY	DATE	CHK	APP
A	INITIAL RELEASE	SB	10/23/14	MP	SB
B	REVISED PER ECN 015-1136	SB	1/22/16	MP	SB
C	REVISED PER ECN 016-1455	SB	4/04/16	MP	SB

LT-EL-BL-EI-PPS-0101-84

BROOKHAVEN NATIONAL LABORATORY

BROOKHAVEN NATIONAL LABORATORY
BROOKHAVEN SCIENCE ASSOCIATES
UPTON, NEW YORK 11973
Exploring Life's Mysteries, Protecting its Future

NSLS II
NATIONAL SYNCHROTRON LIGHT SOURCE II

UNLESS OTHERWISE SPECIFIED
INTEGER TOLERANCES
± .06
DECIMAL TOLERANCES
.X ± .030
.XX ± .015
.XXX ± .010
ANGULAR TOLERANCE ± 0.5°
UNSPECIFIED RADII .02 MAX
125 BREAK SHARP CORNERS AND EDGES
FINISH MAX .03 MIN .005

UNLESS OTHERWISE SPECIFIED
DIMENSIONS ARE IN INCHES
DIMENSIONS IN [*, **] ARE
MILLIMETERS EQUIV. FOR REF. ONLY

ESH&Q RISK LEVEL A-1

INTERPRET DRAWING AS PER ANSI Y14.5 OR Y32.2

OUTSTANDING ECN'S •

		DATE
DRWN BY	S.BUDA	10/23/14
CHK BY	M.PFEFFER	11-17-14
ENG APP	S.BUDA	11-17-14
SUPV APP	G.GANETIS	12-01-14
QA APP	E.CHESWICK	11-19-14
ESH APP	B.LEE	11-20-14

PROGRAMMABLE LOGIC

NSLS-II-FRONT END PPS MAIN CPU PROGRAM PENTANT 5 B CHAIN

LT-EL-BL-IN (DRAWING DIRECTORY)	LT-EL-BL-EI-PPS-0101-84 (DRAWING NUMBER)	C (REV)

COMPUTER REPRODUCIBLE | SCALE: N/A | SHEET 1 OF 1

JOB NUMBER	USED ON DWG. NO.

REV	DESCRIPTION	DATE	BY	CHECKED	APP
A	INITIAL RELEASE	9/08/2014	SEJ	JM	SB

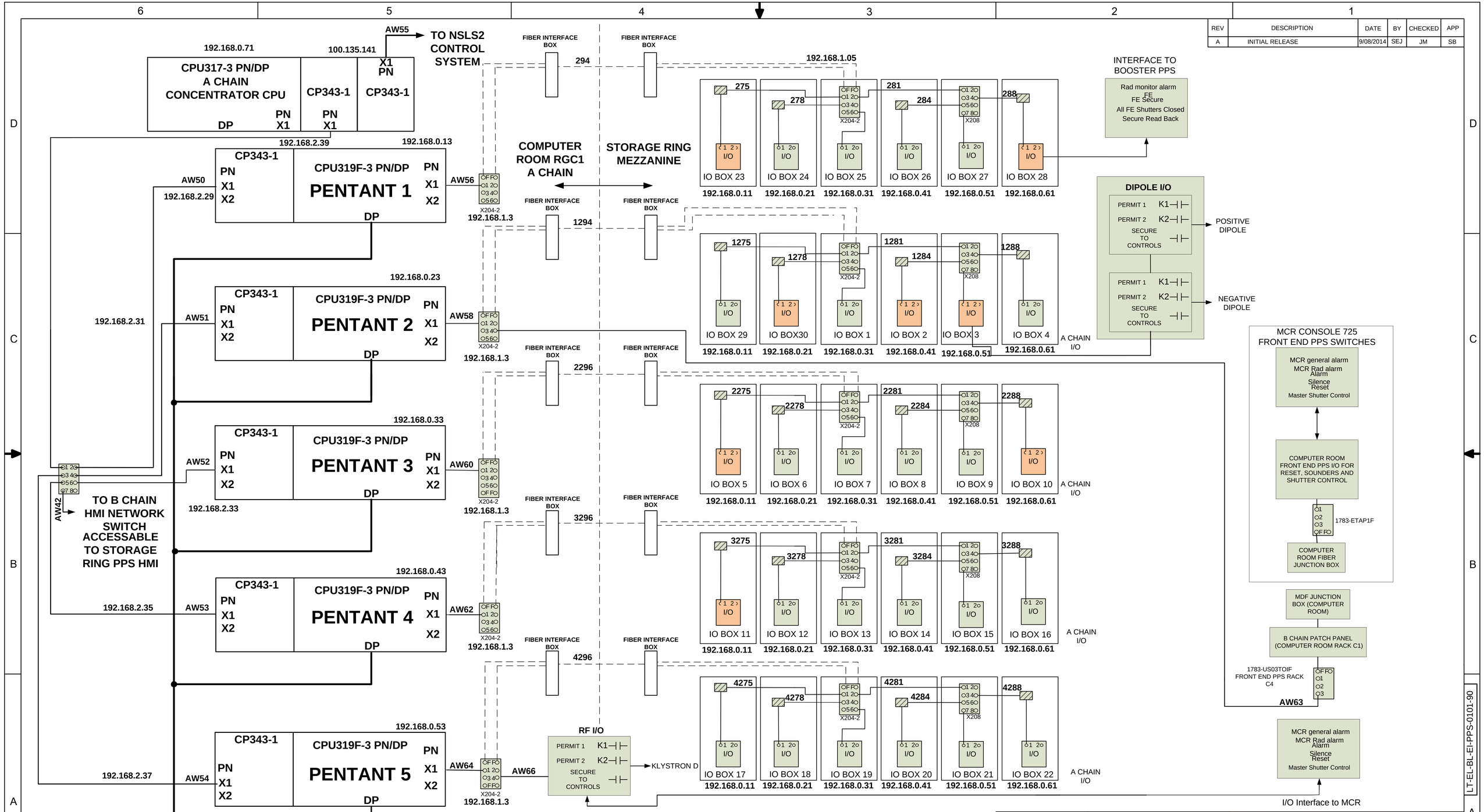

BROOKHAVEN NATIONAL LABORATORY

BROOKHAVEN NATIONAL LABORATORY
BROOKHAVEN SCIENCE ASSOCIATES
UPTON, NEW YORK 11973
Exploring Life's Mysteries, Protecting its Future

NSLS II
NATIONAL SYNCHROTRON LIGHT SOURCE II

UNLESS OTHERWISE SPECIFIED
INTEGER TOLERANCES ± .06
DECIMAL TOLERANCES
.X ± .030
.XX ± .015
.XXX ± .010
ANGULAR TOLERANCE ± 0.5°
UNSPECIFIED RADII .02 MAX
125 BREAK SHARP CORNERS AND EDGES
FINISH MAX .03 MIN .005

UNLESS OTHERWISE SPECIFIED
DIMENSIONS ARE IN INCHES
DIMENSIONS IN [*.**] ARE MILIMETERS EQUIV. FOR REF. ONLY

ESH&Q RISK LEVEL A-1

INTERPRET DRAWING AS PER ANSI Y14.5 OR Y32.2

		DATE
DRWN BY	S. Jarzabkowski	9/08/2014
CHK BY	J. Malley	9/08/2014
ENG APP	S. Buda	9/08/2014
SUPV APP	G. Ganetis	9/10/2014
QA APP	E. Cheswick	9/08/2014
ESH APP	R. Lee	9/10/2014

OUTSTANDING ECN'S

WIRING DIAGRAM, FRONT END PPS CPU RACK A CHAIN

LT-EL-BL-EI (DRAWING DIRECTORY) | LT-EL-BL-EI-PPS-0101-90 (DRAWING NUMBER) | A (REV)

COMPUTER REPRODUCIBLE | SCALE: N/A | SHEET 1 OF 5

JOB NUMBER | USED ON DWG. NO.

REV	DESCRIPTION	DATE	BY	CHECKED	APP
	SEE SHEET 1				

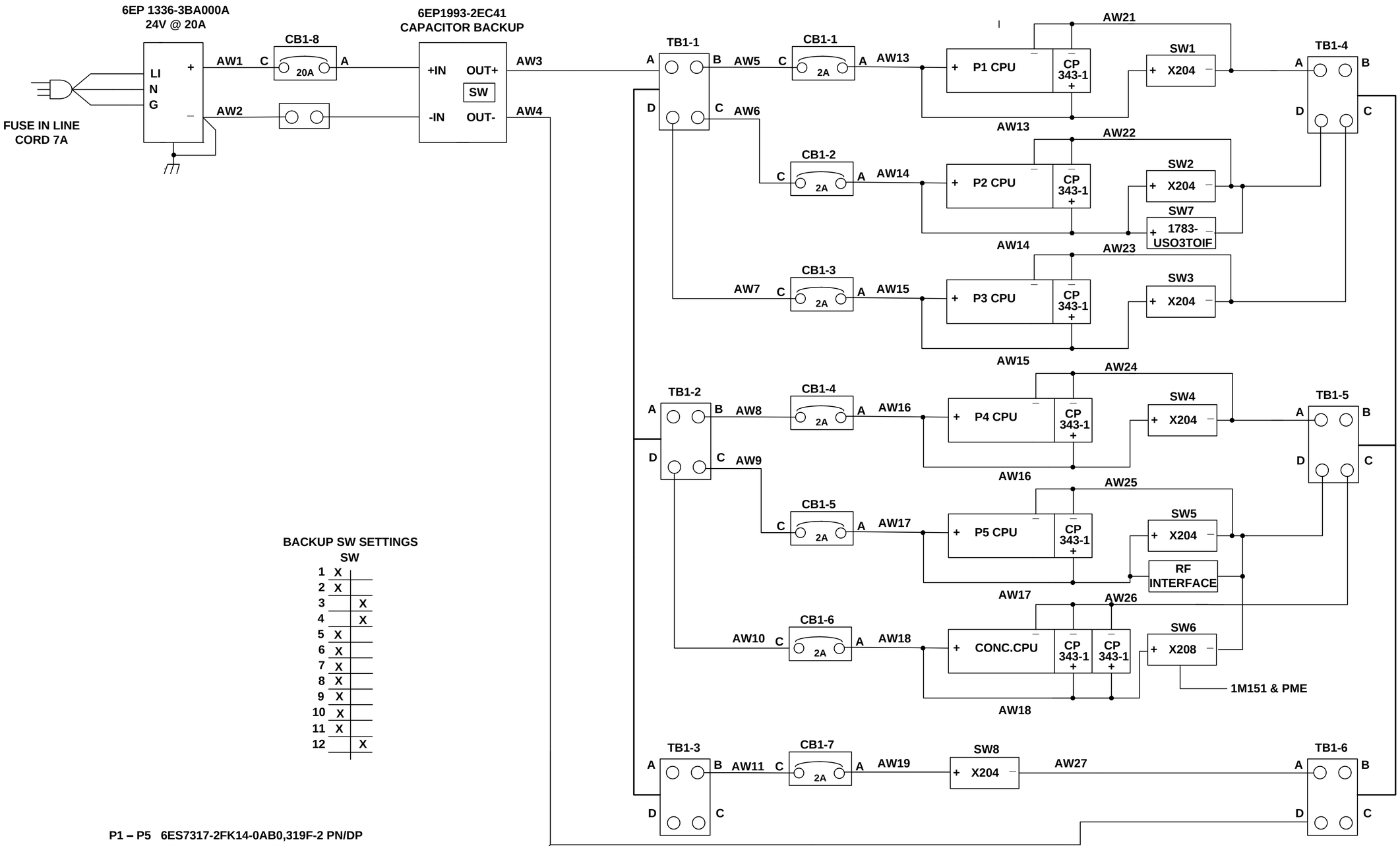

BACKUP SW SETTINGS

	SW	
1	X	
2	X	
3		X
4		X
5	X	
6	X	
7	X	
8	X	
9	X	
10	X	
11	X	
12		X

P1 – P5 6ES7317-2FK14-0AB0,319F-2 PN/DP
CP343-1 6GK7343-1EX30-0XED
SW2 6GK52061-1BB10-2AA3,X206-1
SW1,5 & 8 6GK55204-2BB10-2AA3,X204-2
SW6 6GK5208-OBA10-2AA3,X208
SW7 1783-USO3TOIF

LT-EL-BL-EI-PPS-0101-90

LT-EL-BL-EI (DRAWING DIRECTORY)	LT-EL-BL-EI-PPS-0101-90 (DRAWING NUMBER)	A (REV)
COMPUTER REPRODUCIBLE	SCALE: N/A	SHEET 2 OF 5

REV	DESCRIPTION	BY	DATE	CHK	APP
	SEE SHEET 1				

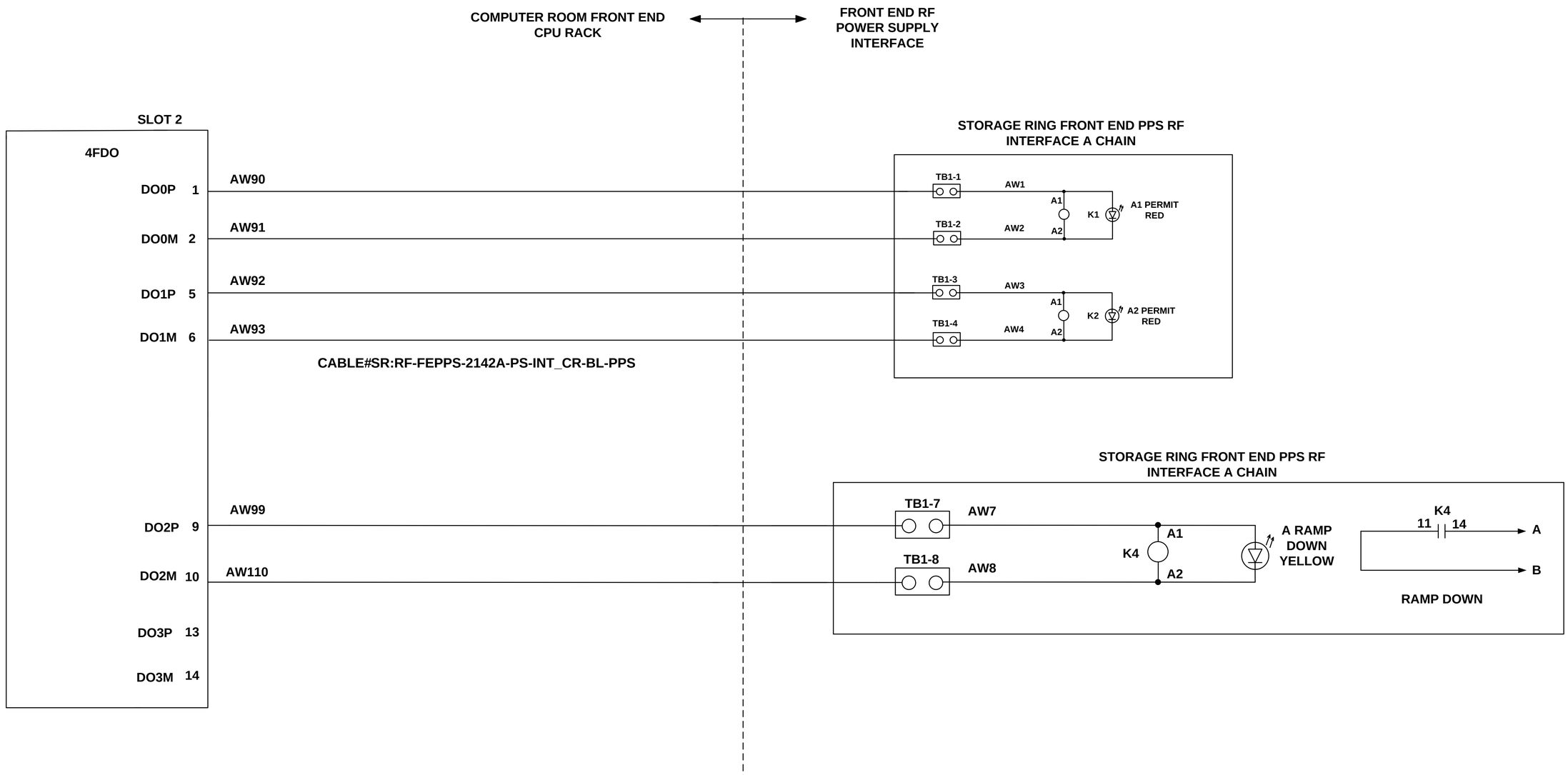

LT-EL-BL-EI-PPS-0101-90

A

LT-EL-BL-EI (DRAWING DIRECTORY)	LT-EL-BL-EI-PPS-0101-90 (DRAWING NUMBER)	A (REV)
COMPUTER REPRODUCIBLE	SCALE: N/A	SHEET 3 OF 5

REV	DESCRIPTION	BY	DATE	CHK	APP
	SEE SHEET 1				

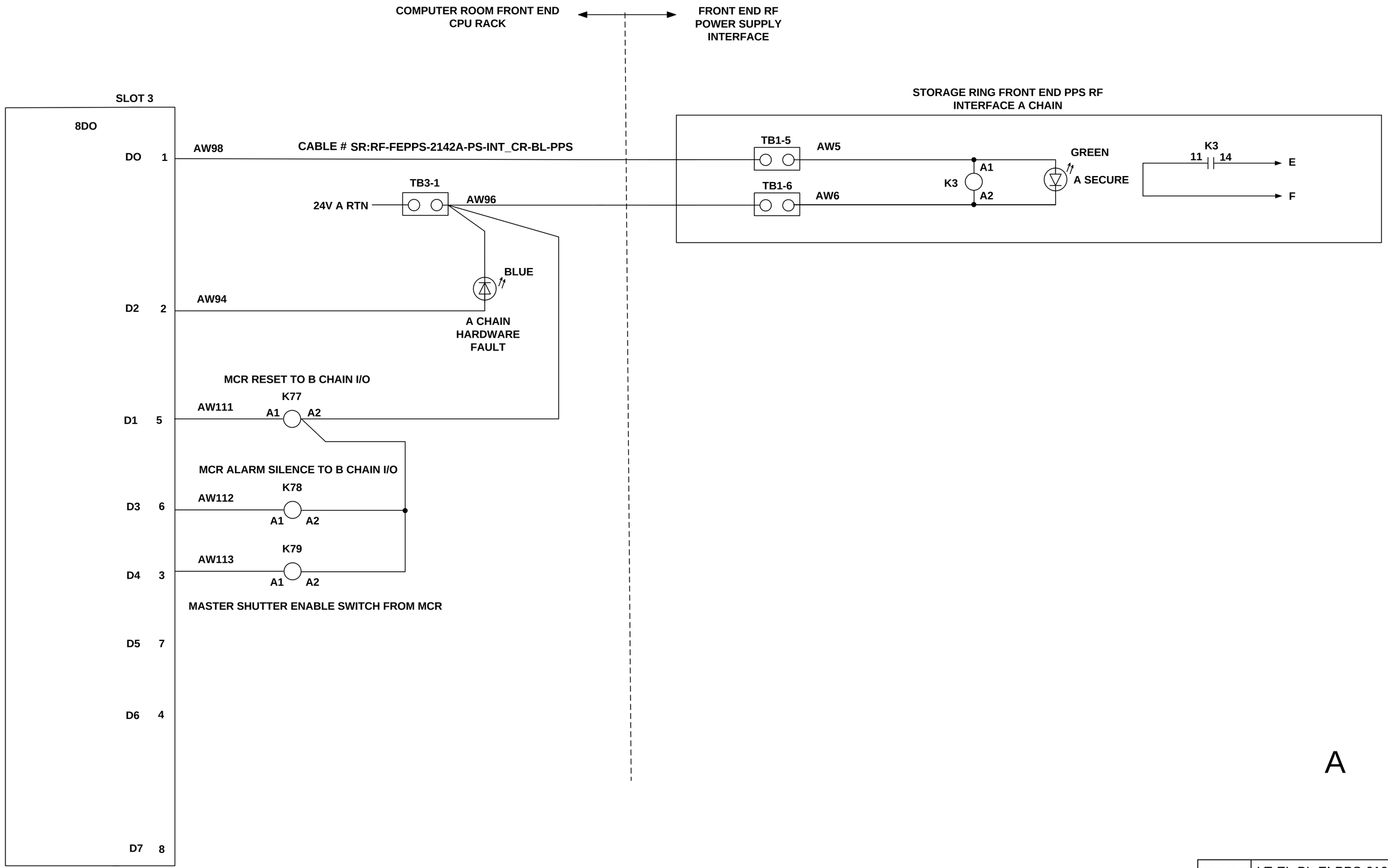

A

LT-EL-BL-EI-PPS-0101-90

LT-EL-BL-EI	LT-EL-BL-EI-PPS-0101-90	A
DRAWING DIRECTORY	DRAWING NUMBER	REV

COMPUTER REPRODUCIBLE | SCALE: N/A | SHEET 4 OF 5

REV	DESCRIPTION	BY	DATE	CHK	APP
	SEE SHEET 1				

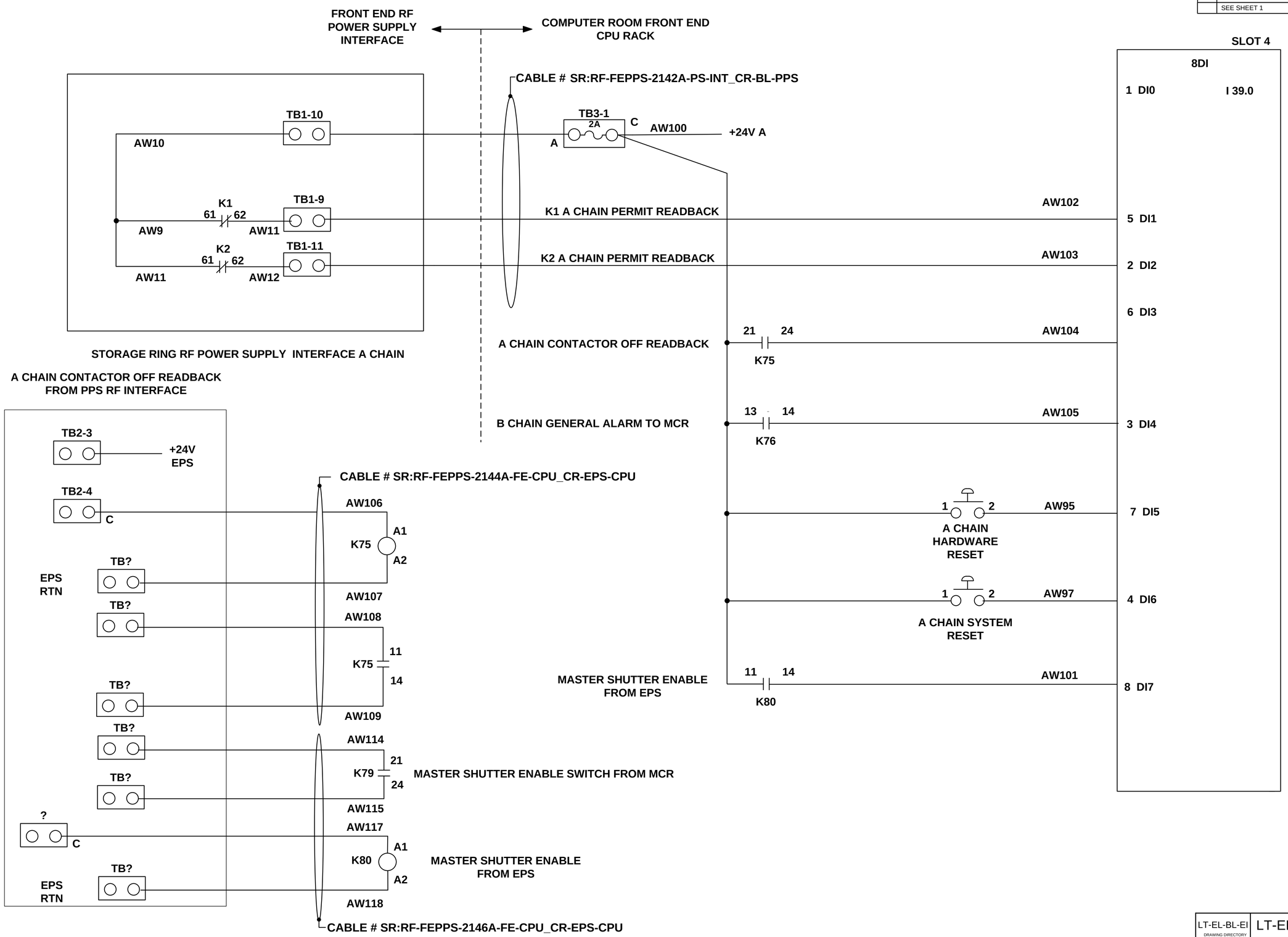

A

LT-EL-BL-EI-PPS-0101-90

LT-EL-BL-EI (DRAWING DIRECTORY)	LT-EL-BL-EI-PPS-0101-90 (DRAWING NUMBER)	A (REV)
COMPUTER REPRODUCIBLE	SCALE: N/A	SHEET 5 OF 5

REV	DESCRIPTION	DATE	BY	CHECKED	APP
A	INITIAL RELEASE	9/08/2014	SEJ	JM	SB

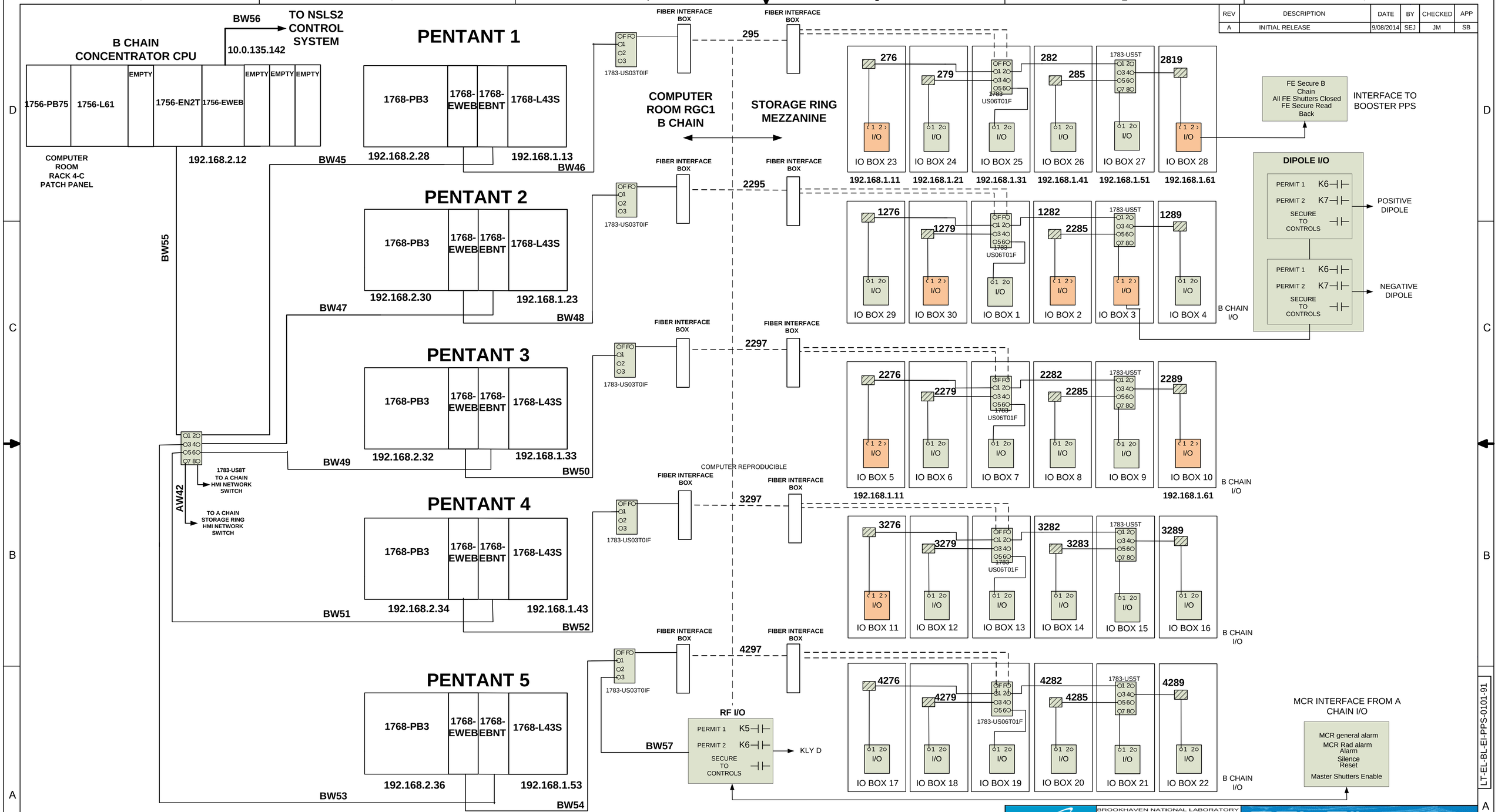

BROOKHAVEN NATIONAL LABORATORY

BROOKHAVEN NATIONAL LABORATORY
BROOKHAVEN SCIENCE ASSOCIATES
UPTON, NEW YORK 11973
Exploring Life's Mysteries, Protecting its Future

NSLS II NATIONAL SYNCHROTRON LIGHT SOURCE II

UNLESS OTHERWISE SPECIFIED INTEGER TOLERANCES ± .06
DECIMAL TOLERANCES .X ± .030 .XX ± .015 .XXX ± .010
ANGULAR TOLERANCE ± 0.5°
UNSPECIFIED RADII .02 MAX
125 BREAK SHARP CORNERS AND EDGES
FINISH MAX .03 MIN .005

UNLESS OTHERWISE SPECIFIED DIMENSIONS ARE IN INCHES DIMENSIONS IN [ ] ARE MILLIMETERS EQUIV. FOR REF. ONLY

ESH&Q RISK LEVEL A-1

INTERPRET DRAWING AS PER ANSI Y14.5 OR Y32.2

		DATE	OUTSTANDING ECN'S
DRWN BY	S. Jarzabkowski	9/08/2014	
CHK BY	J. Malley	9/08/2014	
ENG APP	S. Buda	9/08/2014	
SUPV APP	G. Ganetis	9/10/2014	
QA APP	E. Cheswick	9/08/2014	
ESH APP	R. Lee	9/10/2014	

WIRING DIAGRAM, FRONT END PPS CPU RACK B CHAIN

LT-EL-BL-EI (DRAWING DIRECTORY) | LT-EL-BL-EI-PPS-0101-91 (DRAWING NUMBER) | A (REV)

COMPUTER REPRODUCIBLE | SCALE: N/A | SHEET 1 OF 5

JOB NUMBER | USED ON DWG. NO.

LT-EL-BL-EI-PPS-0101-91

REV	DESCRIPTION	DATE	BY	CHECKED	APP
	SEE SHEET 1				

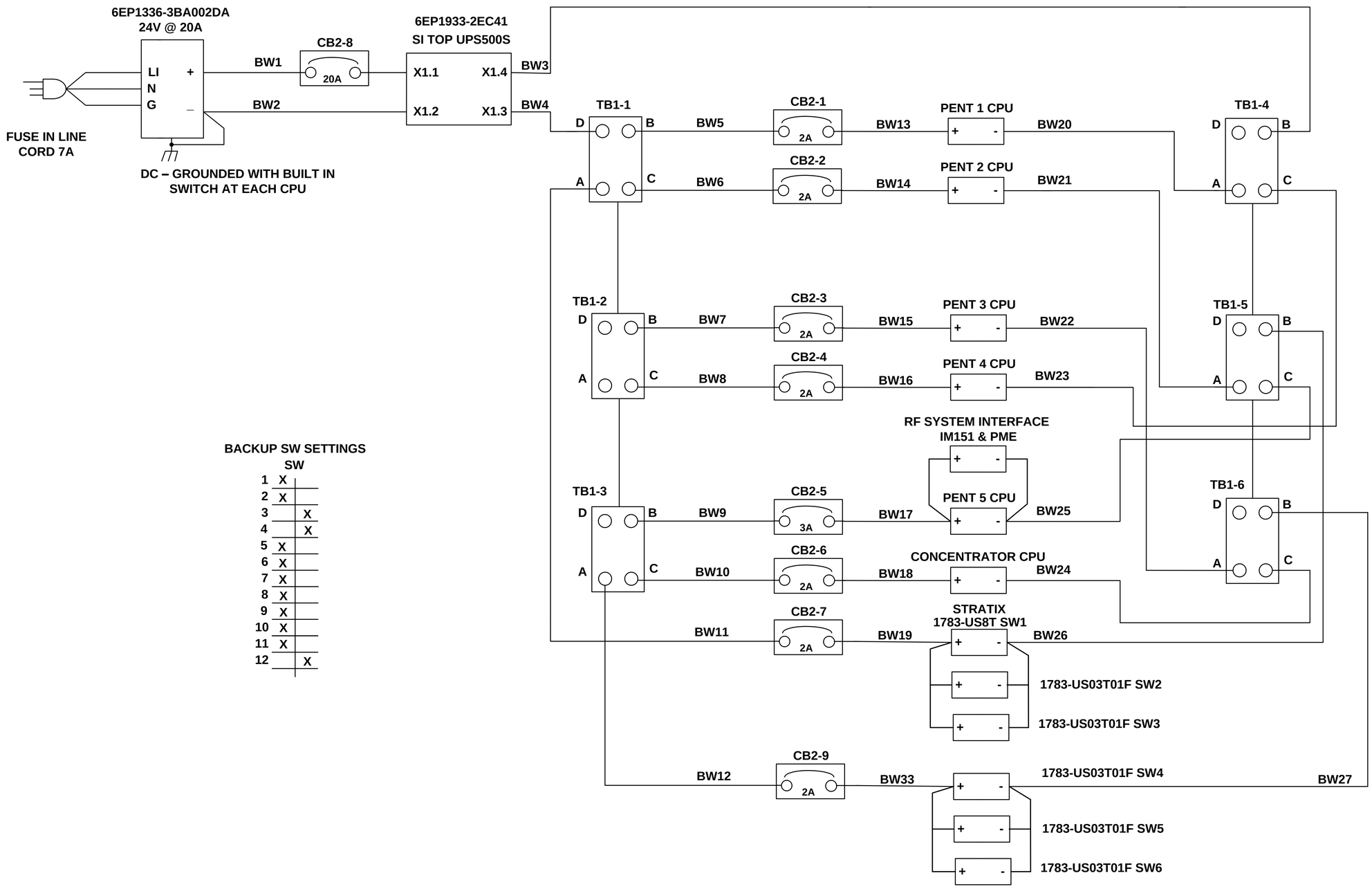

BACKUP SW SETTINGS

	SW	
1	X	
2	X	
3		X
4		X
5	X	
6	X	
7	X	
8	X	
9	X	
10	X	
11	X	
12		X

LT-EL-BL-EI-PPS-0101-91

LT-EL-BL-EI	LT-EL-BL-EI-PPS-0101-91	A
DRAWING DIRECTORY	DRAWING NUMBER	REV
COMPUTER REPRODUCIBLE	SCALE: N/A	SHEET 2 OF 5

REV	DESCRIPTION	BY	DATE	CHK	APP
	SEE SHEET 1				

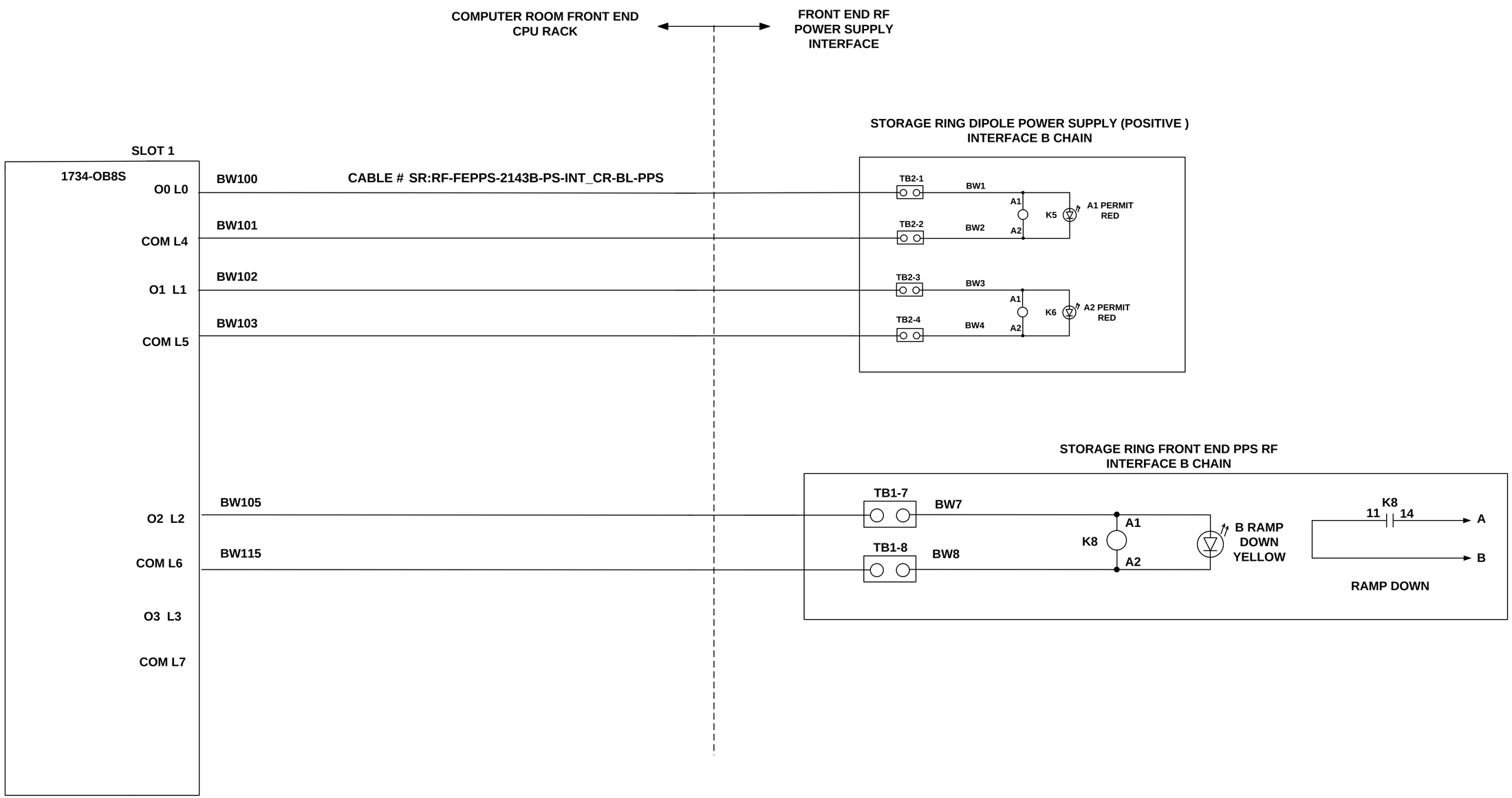

B

LT-EL-BL-EI-PPS-0101-91

LT-EL-BL-EI (DRAWING DIRECTORY)	LT-EL-BL-EI-PPS-0101-91 (DRAWING NUMBER)	A (REV)
COMPUTER REPRODUCIBLE	SCALE: N/A	SHEET 3 OF 5

REV	DESCRIPTION	BY	DATE	CHK	APP
	SEE SHEET 1				

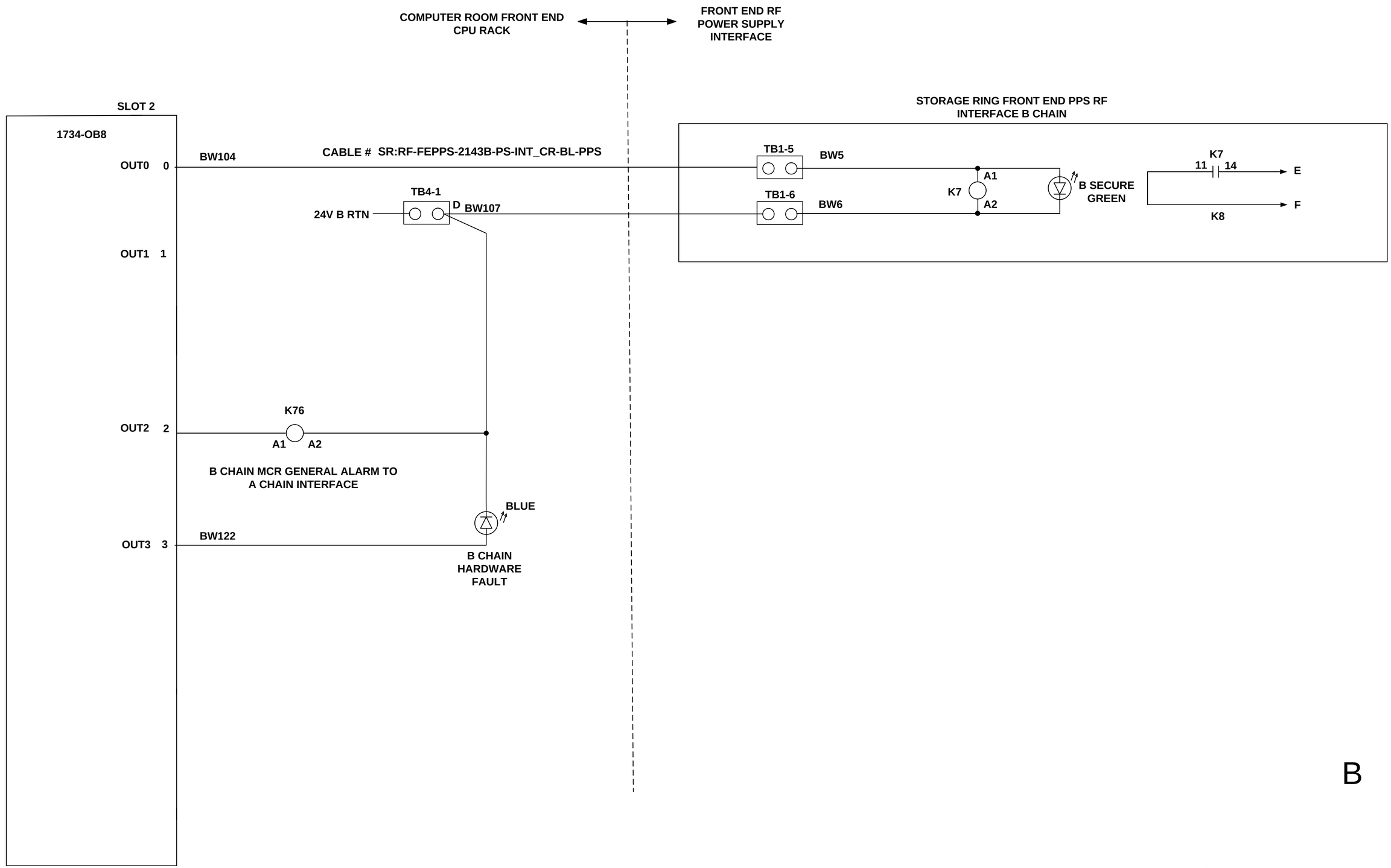

B

LT-EL-BL-EI-PPS-0101-91

LT-EL-BL-EI (DRAWING DIRECTORY)	LT-EL-BL-EI-PPS-0101-91 (DRAWING NUMBER)	A (REV)
COMPUTER REPRODUCIBLE	SCALE: N/A	SHEET 4 OF 5

REV	DESCRIPTION	BY	DATE	CHK	APP
	SEE SHEET 1				

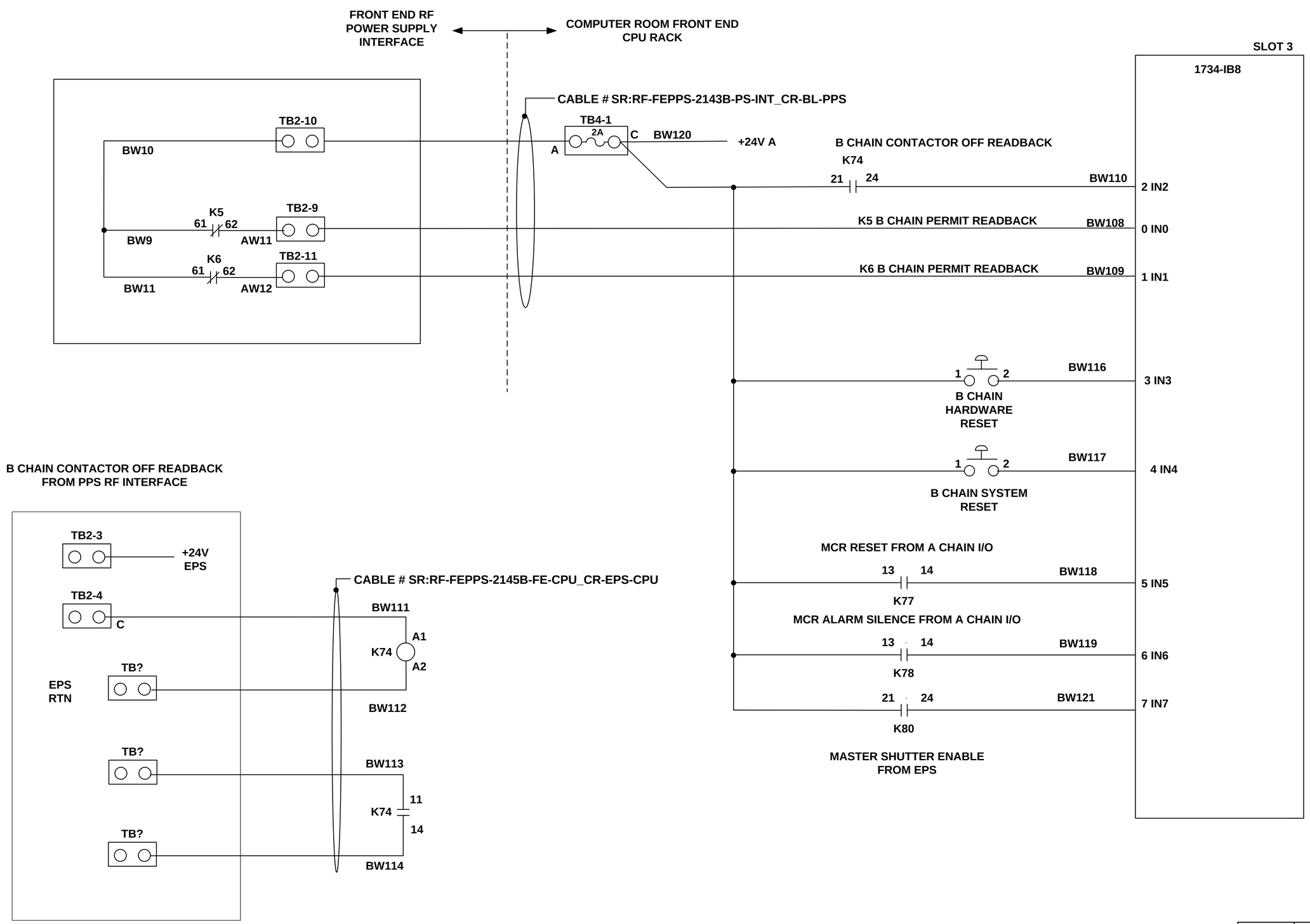

B

LT-EL-BL-EI-PPS-0101-91

LT-EL-BL-EI (DRAWING DIRECTORY)	LT-EL-BL-EI-PPS-0101-91 (DRAWING NUMBER)	A (REV)
COMPUTER REPRODUCIBLE	SCALE: N/A	SHEET 5 OF 5

REV	DESCRIPTION	DATE	BY	CHECKED	APP
A	INITIAL RELEASE	9/08/2014	SEJ	JM	SB
B	REVISED PER ECN LT-ECN-015-1257	7-29-15	CG	JM	SB
C	REVISED PER ECN LT-ECN-016-1373	12/03/2016	SEJ	JM	SB
D	REVISED PER ECN LT-ECN-016-1493	12/03/2016	SEJ	JM	SB

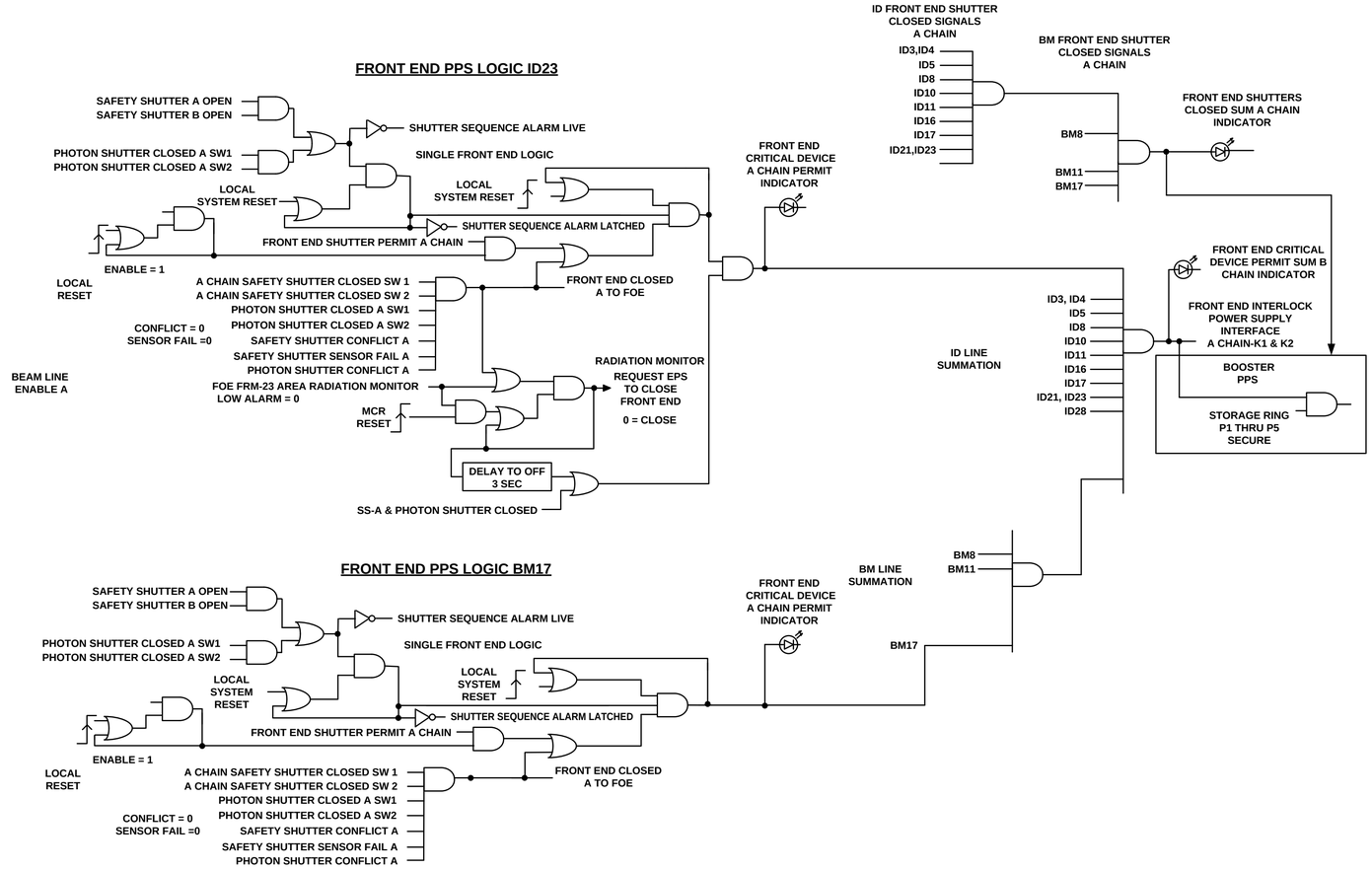

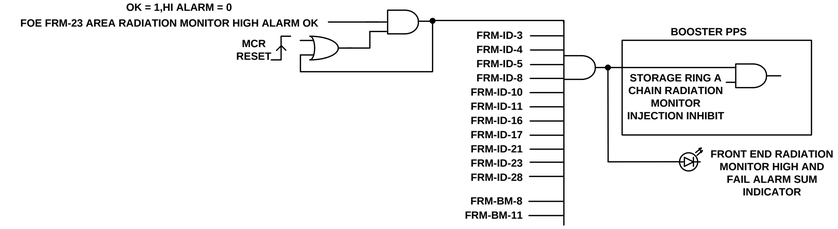

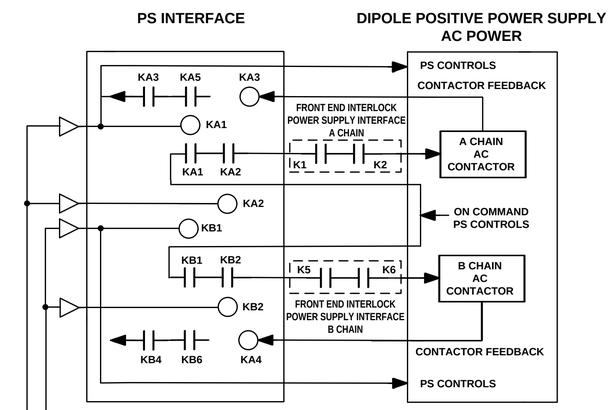

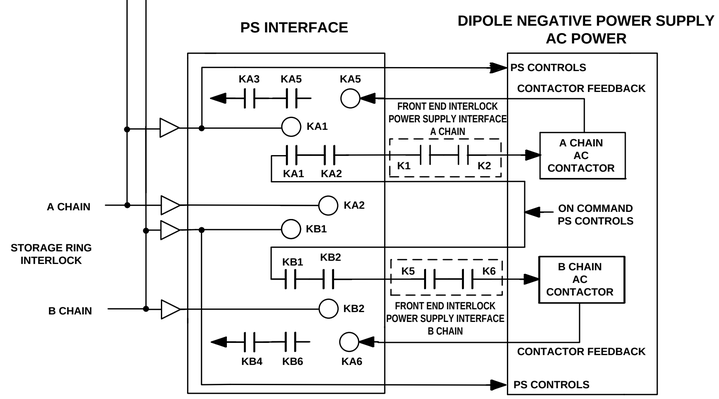

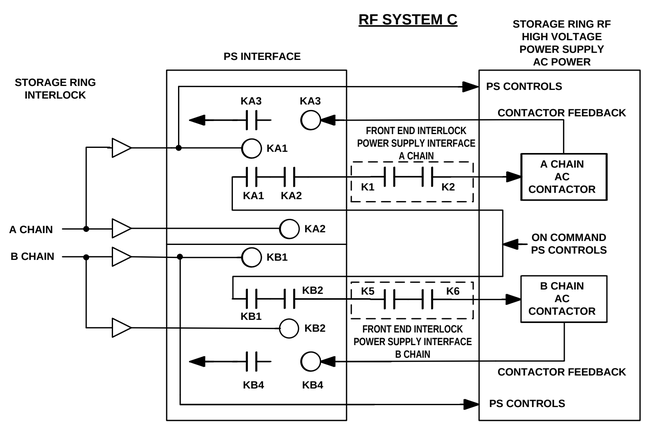

FULL NSLS2 DESIGN HAS UP TO 4 RF SYSTEMS
(C SHOWN)

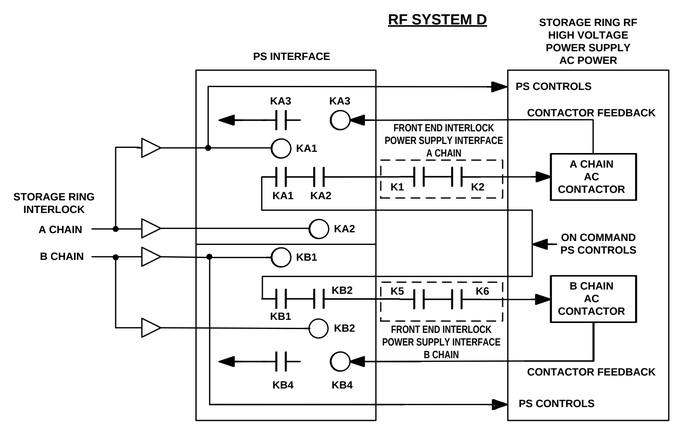

FULL NSLS2 DESIGN HAS UP TO 4 RF SYSTEMS
(D SHOWN)

LT-EL-BL-EI-PPS-0101-92

BROOKHAVEN NATIONAL LABORATORY

BROOKHAVEN NATIONAL LABORATORY
BROOKHAVEN SCIENCE ASSOCIATES
UPTON, NEW YORK 11973
Exploring Life's Mysteries, Protecting its Future

NSLSII NATIONAL SYNCHROTRON LIGHT SOURCE II

UNLESS OTHERWISE SPECIFIED
INTEGER TOLERANCES ± .06
DECIMAL TOLERANCES
.X ± .030
.XX ± .015
.XXX ± .010
ANGULAR TOLERANCE ± 0.5°
UNSPECIFIED RADII .02 MAX
125 BREAK SHARP CORNERS AND EDGES
FINISH MAX .03 MIN .005

UNLESS OTHERWISE SPECIFIED DIMENSIONS ARE IN INCHES
DIMENSIONS IN [ ] ARE MILLIMETERS EQUIV. FOR REF. ONLY
INTERPRET DRAWING AS PER ANSI Y14.5 OR Y32.2

ESH&Q RISK LEVEL A-1

		DATE	OUTSTANDING ECN'S
DRWN BY	S. Jarzabkowski	9/08/2014	
CHK BY	J. Malley	9/08/2014	
ENG APP	S. Buda	9/08/2014	
SUPV APP	G. Ganetis	9/10/2014	
QA APP	E. Cheswick	9/08/2014	
ESH APP	R. Lee	9/10/2014	

JOB NUMBER | USED ON DWG. NO.

WIRING DIAGRAM, FRONT END PPS SYSTEM LOGIC

LT-EL-BL-EI (DRAWING DIRECTORY) | LT-EL-BL-EI-PPS-0101-92 (DRAWING NUMBER) | D (REV)

WBS # 1.03.06.01.03 | SCALE: N/A | SHEET 1 OF 3

REV	DESCRIPTION	BY	DATE	CHK	APP
	SEE SHEET 1				

FRONT END PPS LOGIC ID23

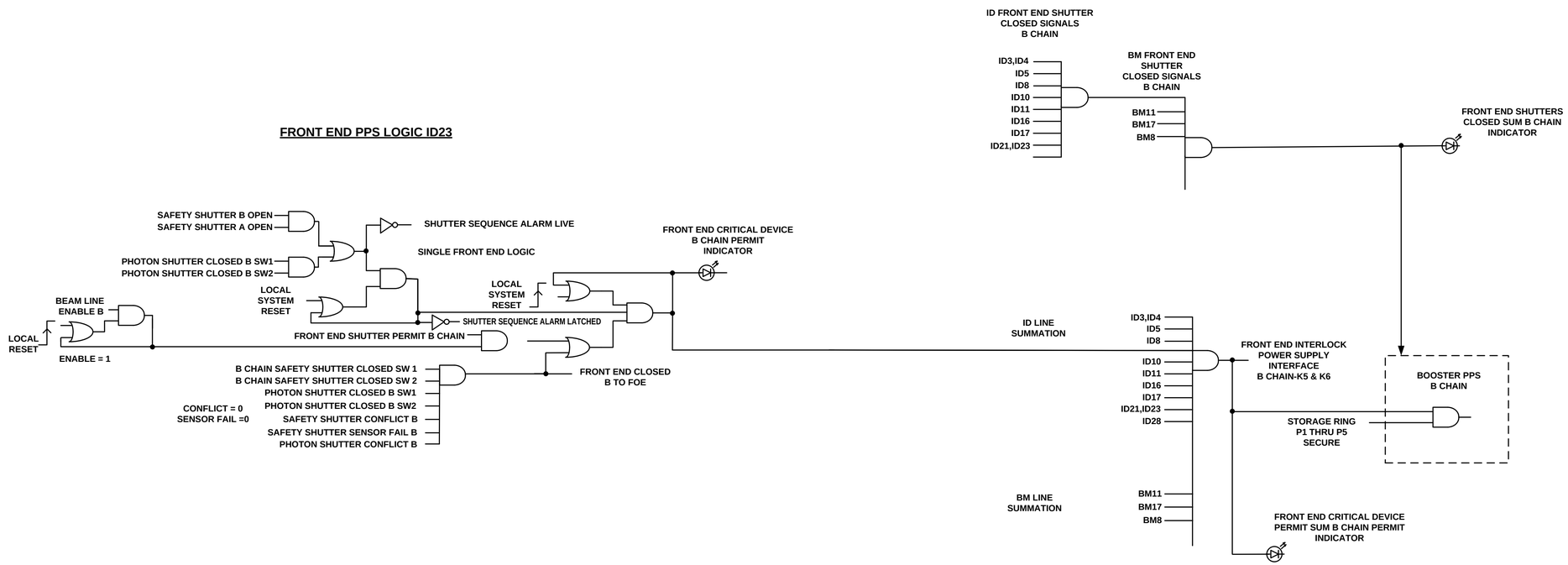

LT-EL-BL-EI	LT-EL-BL-EI-PPS-0101-92	D
DRAWING DIRECTORY	DRAWING NUMBER	REV
COMPUTER REPRODUCIBLE	SCALE: N/A	SHEET 2 OF 3

LT-EL-BL-EI-PPS-0101-92

REV	DESCRIPTION	BY	DATE	CHK	APP
	SEE SHEET 1				

A CHAIN

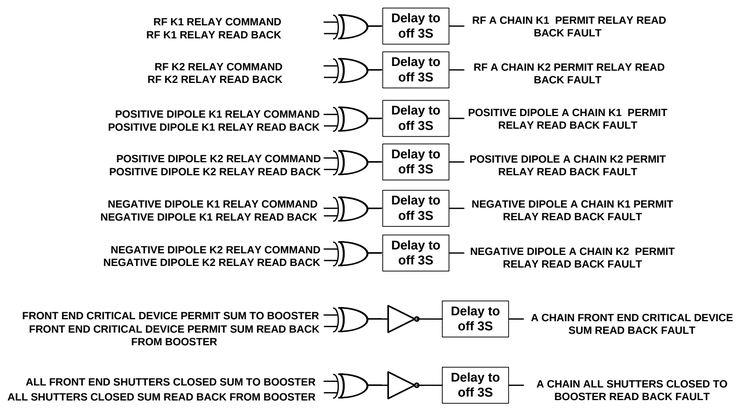

B CHAIN

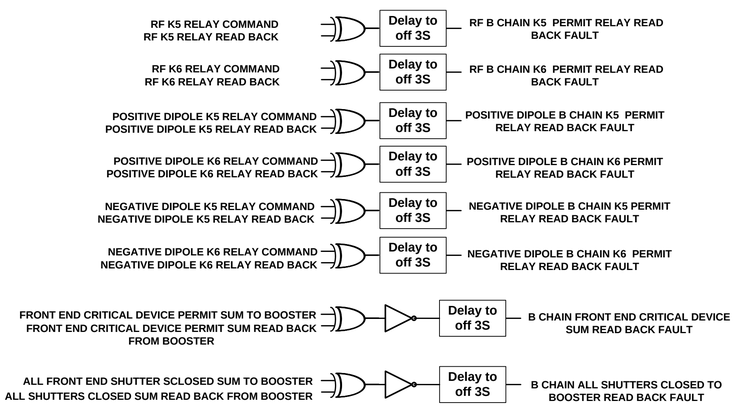

LT-EL-BL-EI-PPS-0101-92

LT-EL-BL-EI (DRAWING DIRECTORY)	LT-EL-BL-EI-PPS-0101-92 (DRAWING NUMBER)	D (REV)
COMPUTER REPRODUCIBLE	SCALE: N/A	SHEET 3 OF 3

FIRMWARE/SOFTWARE/PROGRAMMING LOGIC

DESCRIPTION:

ID21 A CHAIN BEAMLINE PPS PLC PROGRAM

PROGRAM	**SIEMENS STEP 7**	
VERSION	**VERSION 5.5 + SP4**	
DEVICE	**SIEMENS CPU319F-3-PN/DP**	
OPERATING SYSTEM	**WINDOWS**	
PROGRAMMING METHOD	**LADDER LOGIC**	
FILE	**NSLS II Beamline_ID21 REV A**	

REV	DESCRIPTION	BY	DATE	CHK	APP
A	INITIAL RELEASE	EO	06/13/16	MP	SB

LT-EL-BL-EI-PPS-1210-70

BROOKHAVEN NATIONAL LABORATORY

BROOKHAVEN NATIONAL LABORATORY
BROOKHAVEN SCIENCE ASSOCIATES
UPTON, NEW YORK 11973
Exploring Life's Mysteries, Protecting its Future

NSLS II
NATIONAL SYNCHROTRON LIGHT SOURCE II

UNLESS OTHERWISE SPECIFIED
INTEGER TOLERANCES ± .06
DECIMAL TOLERANCES
.X ± .030
.XX ± .015
.XXX ± .010
ANGULAR TOLERANCE ± 0.5°
UNSPECIFIED RADII .02 MAX
125 FINISH — BREAK SHARP CORNERS AND EDGES
MAX .03 MIN .005

UNLESS OTHERWISE SPECIFIED DIMENSIONS ARE IN INCHES DIMENSIONS IN [ ] ARE MILLIMETERS EQUIV. FOR REF. ONLY

ESH&Q RISK LEVEL A-1

INTERPRET DRAWING AS PER ANSI Y14.5 OR Y32.2

OUTSTANDING ECN'S

		DATE
DRWN BY	E.ORR	06/13/16
CHK BY	M.PFEFFER	06/13/16
ENG APP	S.BUDA	06/13/16
SUPV APP	G.GANETIS	06/20/16
QA APP	E.CHESWICK	06/16/16
ESH APP	B.LEE	06/17/16

PROGRAMMABLE LOGIC
NSLS-II-ID21 A CHAIN BEAMLINE PPS PLC PROGRAM

LT-EL-BL-IN — DRAWING DIRECTORY
LT-EL-BL-EI-PPS-1210-70 — DRAWING NUMBER
A — REV

COMPUTER REPRODUCIBLE | SCALE: N/A | SHEET 1 OF 1

JOB NUMBER | USED ON DWG. NO.

FIRMWARE/SOFTWARE/PROGRAMMING LOGIC

DESCRIPTION:

PLC Program for ID21 PPS CPU B Chain

PROGRAM	**RSLOGIX 5000**	
VERSION	**20.3**	
DEVICE	**ALLEN BRADLEY 1786-L43S**	
OPERATING SYSTEM	**WINDOWS**	
PROGRAMMING METHOD	**LADDER**	
FILE	**ID21_B_PLC_20160429.ACD**	

REV	DESCRIPTION	BY	DATE	CHK	APP
A	INITIAL RELEASE	SX	05/10/16	MP	SB

LT-EL-BL-EI-PPS-1210-71

BROOKHAVEN NATIONAL LABORATORY

BROOKHAVEN NATIONAL LABORATORY
BROOKHAVEN SCIENCE ASSOCIATES
UPTON, NEW YORK 11973
Exploring Life's Mysteries, Protecting its Future

NSLS II
NATIONAL SYNCHROTRON LIGHT SOURCE II

UNLESS OTHERWISE SPECIFIED
INTEGER TOLERANCES
± .06
DECIMAL TOLERANCES
.X ± .030
.XX ± .015
.XXX ± .010
ANGULAR TOLERANCE ± 0.5°
UNSPECIFIED RADII .02 MAX
125 BREAK SHARP CORNERS AND EDGES
FINISH MAX .03 MIN .005

UNLESS OTHERWISE SPECIFIED
DIMENSIONS ARE IN INCHES
DIMENSIONS IN [*, **] ARE
MILLIMETERS EQUIV. FOR REF. ONLY

ESH&Q RISK LEVEL A-1

INTERPRET DRAWING AS PER ANSI Y14.5 OR Y32.2

OUTSTANDING ECN'S •

		DATE
DRWN BY	S.XIN	05/10/16
CHK BY	M.PFEFFER	05/10/16
ENG APP	S.BUDA	05/10/16
SUPV APP	G.GANETIS	06/02/16
QA APP	E.CHESWICK	06/02/16
ESH APP	B.LEE	06/02/16

PROGRAMMABLE LOGIC
NSLS-II-ID21 B CHAIN BEAMLINE PPS PLC PROGRAM

LT-EL-BL-IN — DRAWING DIRECTORY
LT-EL-BL-EI-PPS-1210-71 — DRAWING NUMBER
A — REV

COMPUTER REPRODUCIBLE
SCALE: N/A
SHEET 1 OF 1

JOB NUMBER
USED ON DWG. NO.

REV	DESCRIPTION	DATE	BY	CHECKED	APP
A	INITIAL RELEASE	5/20/2016	SEJ	JM	SB

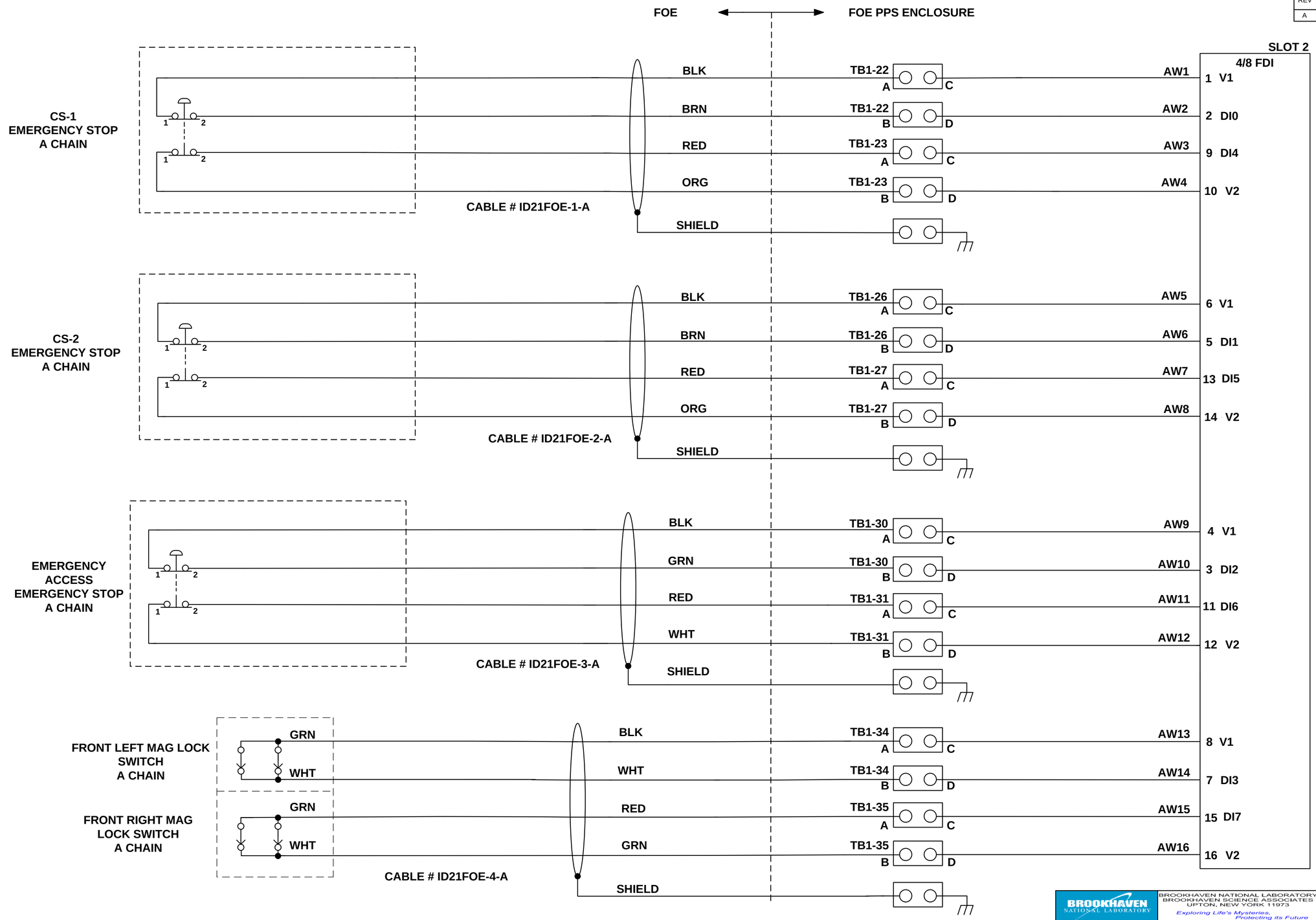

A

LT-EL-BL-EI-PPS-1210-91

JOB NUMBER	USED ON DWG. NO.

BROOKHAVEN NATIONAL LABORATORY

BROOKHAVEN NATIONAL LABORATORY
BROOKHAVEN SCIENCE ASSOCIATES
UPTON, NEW YORK 11973
Exploring Life's Mysteries, Protecting its Future

NSLS II NATIONAL SYNCHROTRON LIGHT SOURCE II

UNLESS OTHERWISE SPECIFIED
INTEGER TOLERANCES ± .06
DECIMAL TOLERANCES
.X ± .030
.XX ± .015
.XXX ± .010
ANGULAR TOLERANCE ± 0.5°
UNSPECIFIED RADII .02 MAX
125 FINISH — BREAK SHARP CORNERS AND EDGES MAX .03 MIN .005

UNLESS OTHERWISE SPECIFIED DIMENSIONS ARE IN INCHES DIMENSIONS IN [ ] ARE MILLIMETERS EQUIV. FOR REF. ONLY

ESH&Q RISK LEVEL A-1

INTERPRET DRAWING AS PER ANSI Y14.5 OR Y32.2

		DATE	OUTSTANDING ECN'S
DRWN BY	S. JARZABKOWSKI	05/20/2016	
CHK BY	J. MALLEY		
ENG APP	S. BUDA		
SUPV APP	G. GANETIS		
QA APP	E. CHESWICK		
ESH APP	B. LEE		

WIRING DIAGRAM, 21-ID-FOE (ESM-FOE) A CHAIN AND B CHAIN

DRAWING DIRECTORY	DRAWING NUMBER	REV
LT-EL-BL-EI	LT-EL-BL-EI-PPS-1210-91	A

COMPUTER REPRODUCIBLE | SCALE: N/A | SHEET 1 OF 38

REV	DESCRIPTION	DATE	BY	CHECKED	APP
	SEE SHEET 1				

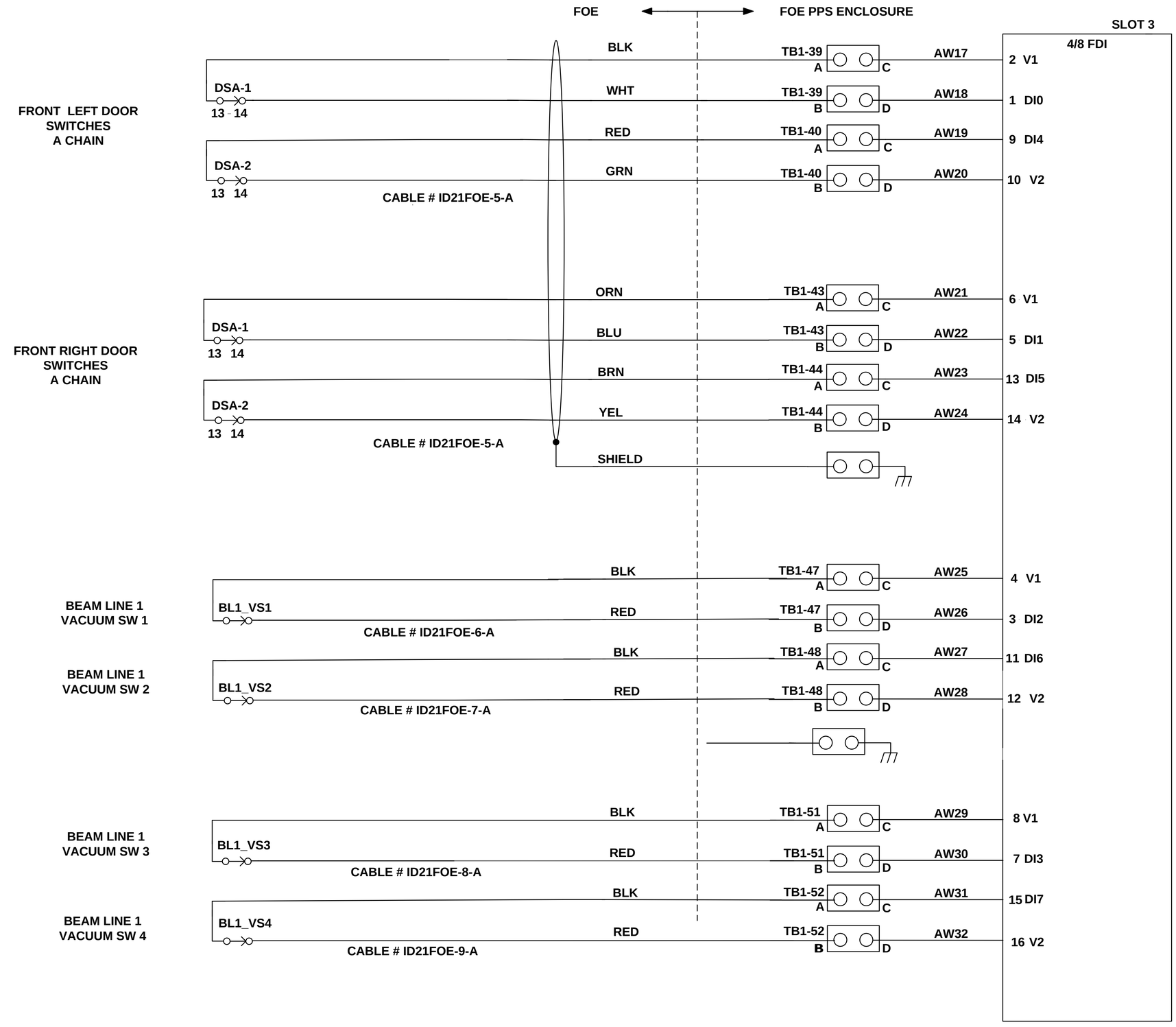

A

LT-EL-BL-EI	LT-EL-BL-EI-PPS-1210-91	A
DRAWING DIRECTORY	DRAWING NUMBER	REV

COMPUTER REPRODUCIBLE | SCALE: N/A | SHEET 2 OF 38

LT-EL-BL-EI-PPS-1210-91

REV	DESCRIPTION	DATE	BY	CHECKED	APP
	SEE SHEET 1				

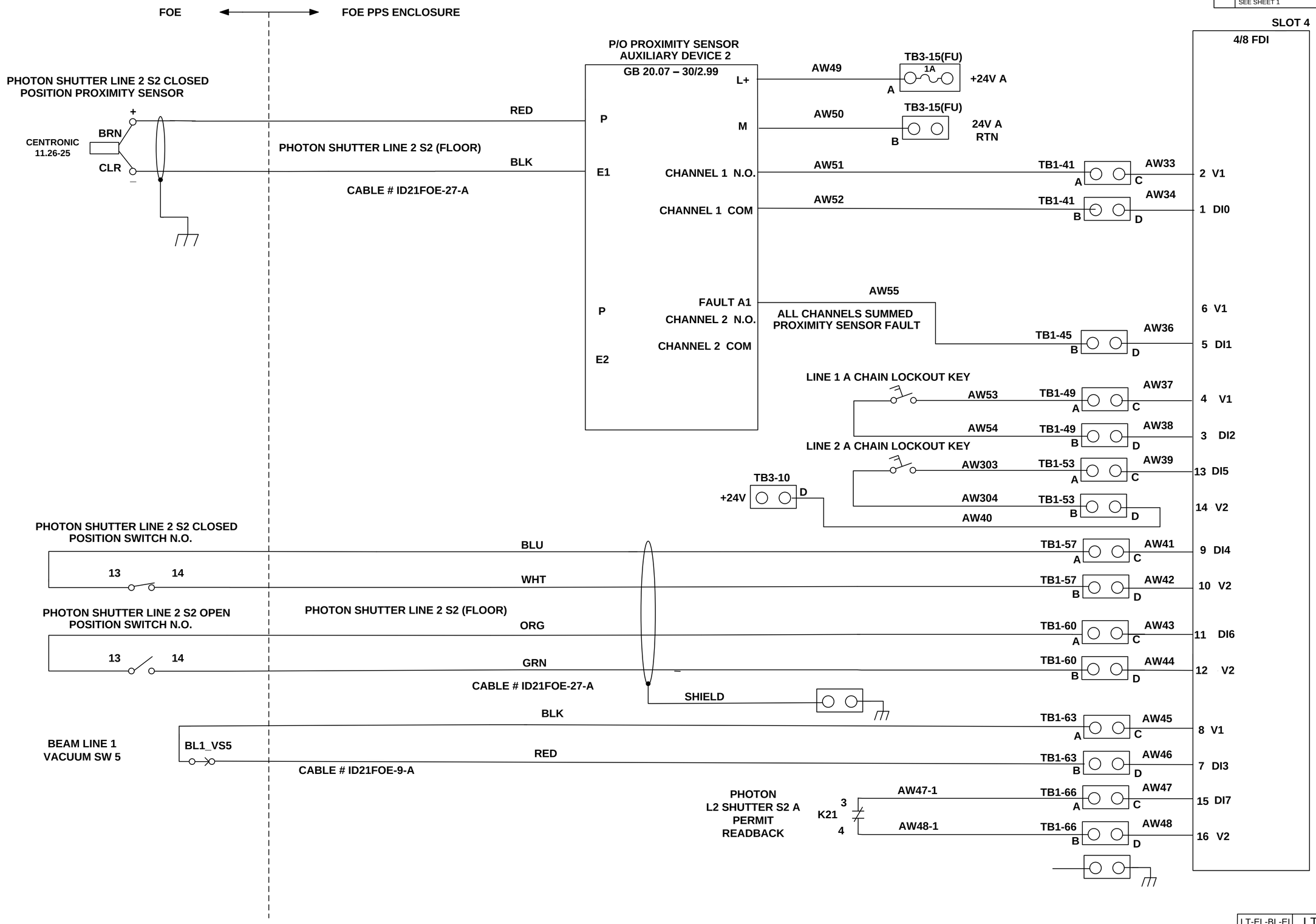

A

LT-EL-BL-EI	LT-EL-BL-EI-PPS-1210-91	A
DRAWING DIRECTORY	DRAWING NUMBER	REV

COMPUTER REPRODUCIBLE | SCALE: N/A | SHEET 3 OF 38

LT-EL-BL-EI-PPS-1210-91

REV	DESCRIPTION	DATE	BY	CHECKED	APP
	SEE SHEET 1				

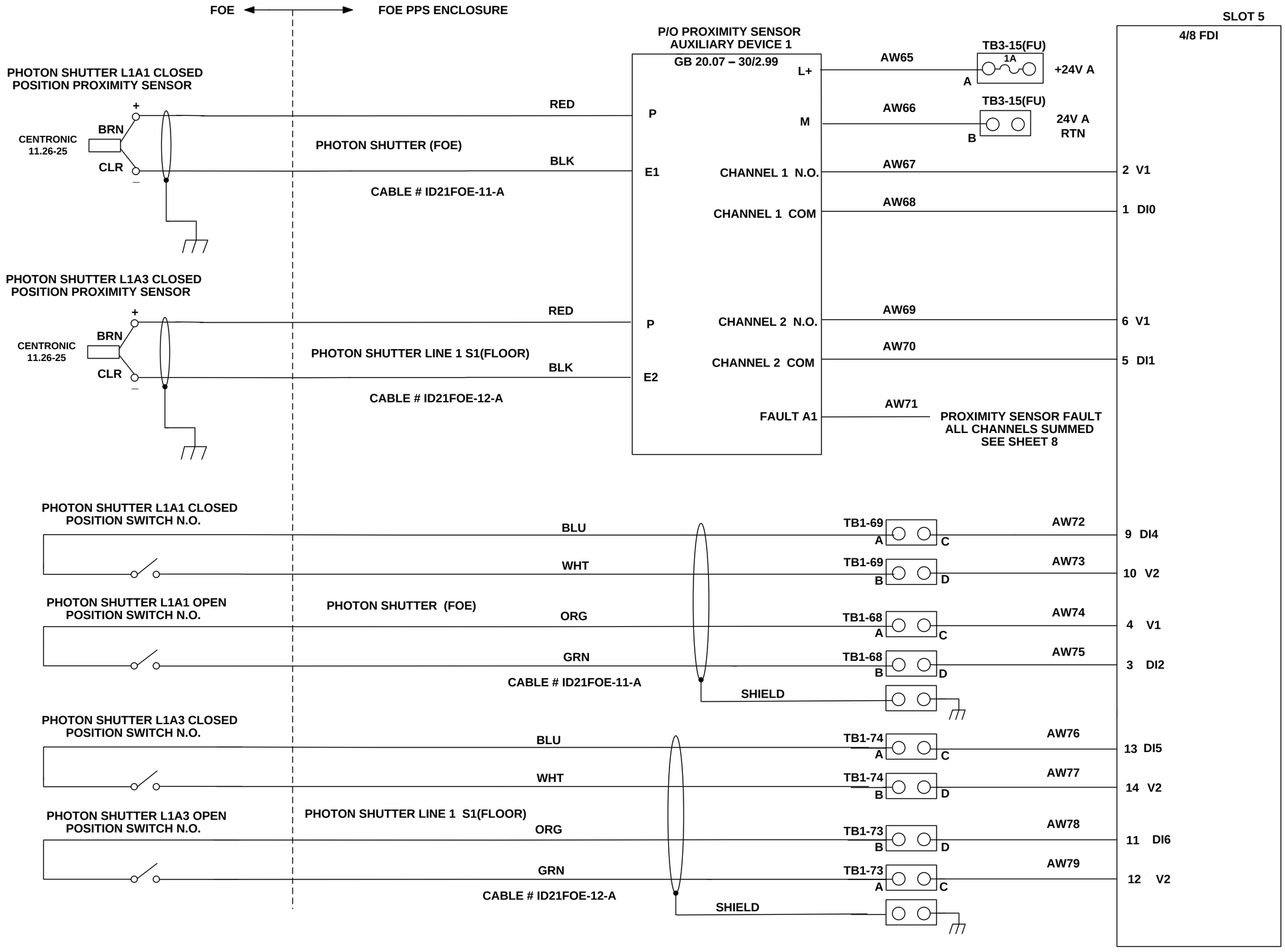

A

LT-EL-BL-EI	LT-EL-BL-EI-PPS-1210-91	A
DRAWING DIRECTORY	DRAWING NUMBER	REV

COMPUTER REPRODUCIBLE | SCALE: N/A | SHEET 4 OF 38

LT-EL-BL-EI-PPS-1210-91

REV	DESCRIPTION	DATE	BY	CHECKED	APP
	SEE SHEET 1				

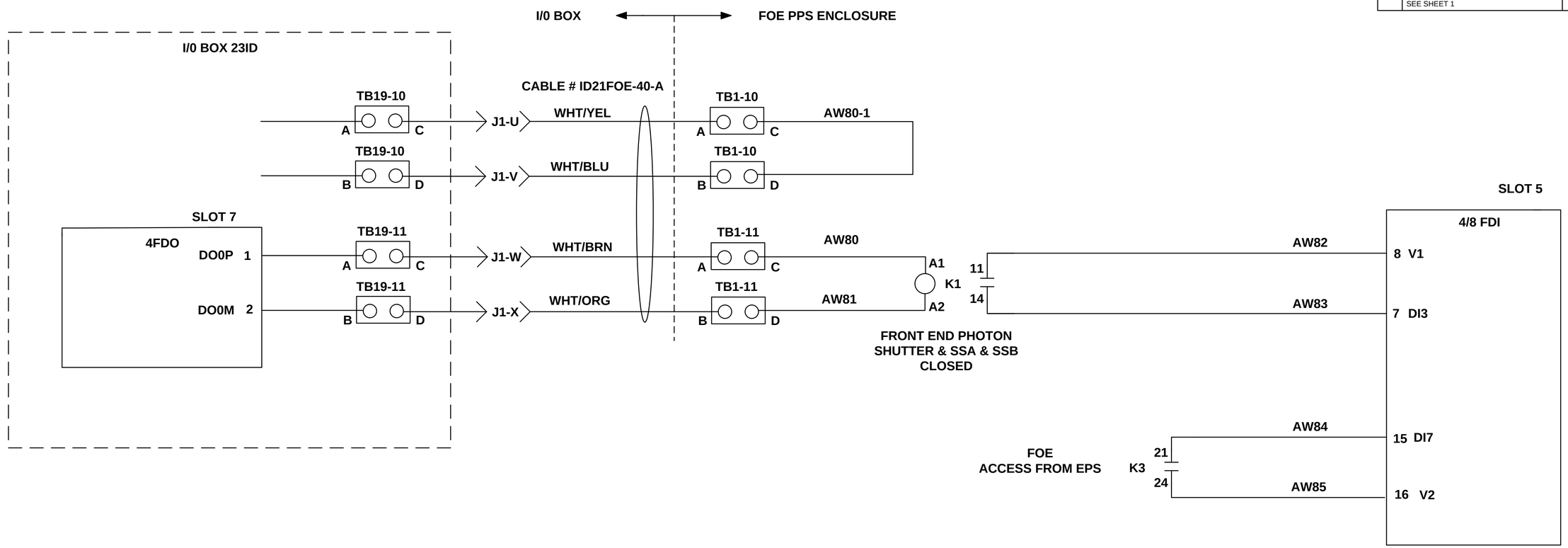

A

LT-EL-BL-EI	LT-EL-BL-EI-PPS-1210-91	A
DRAWING DIRECTORY	DRAWING NUMBER	REV

COMPUTER REPRODUCIBLE | SCALE: N/A | SHEET 5 OF 38

LT-EL-BL-EI-PPS-1210-91

REV	DESCRIPTION	DATE	BY	CHECKED	APP
	SEE SHEET 1				

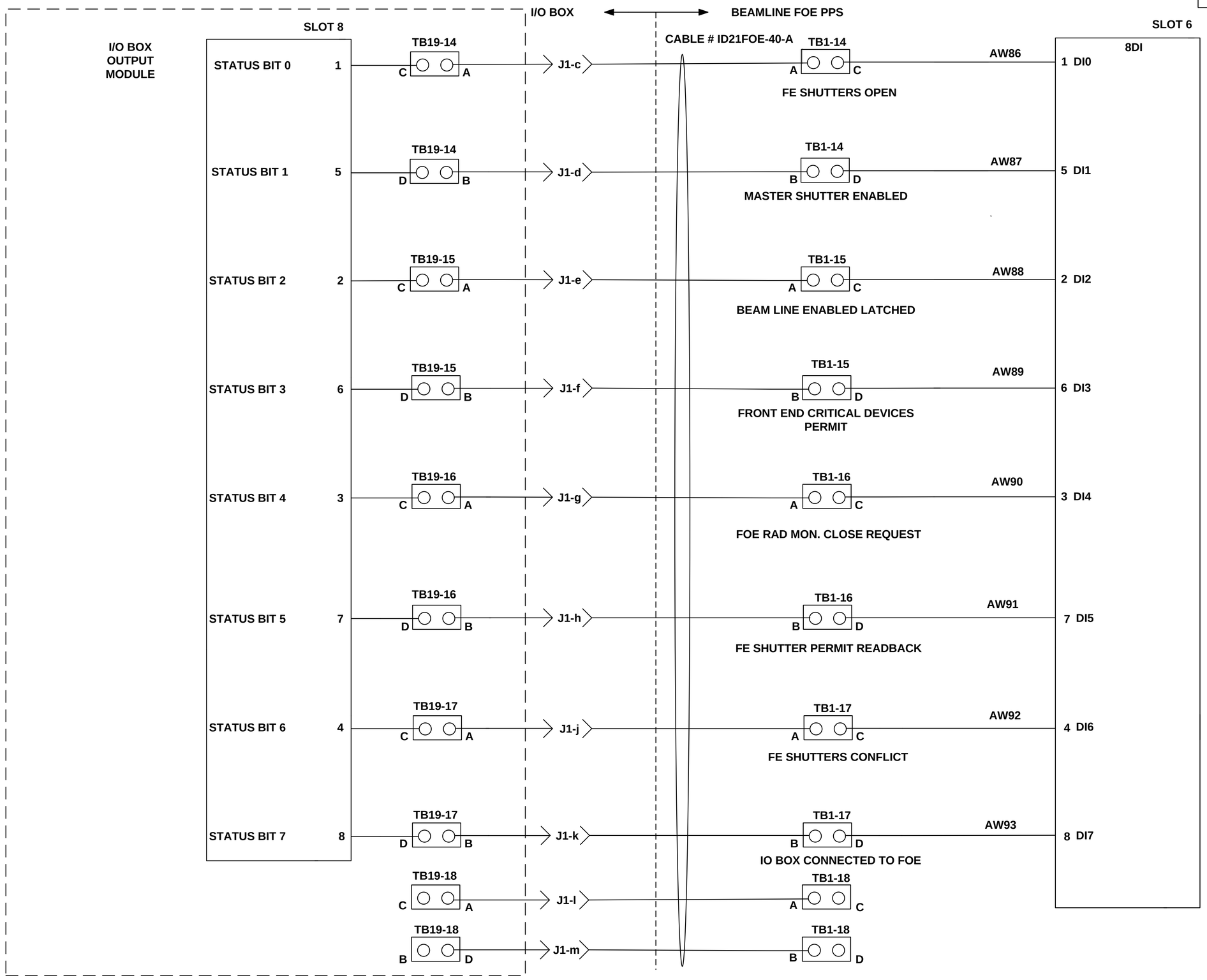

A

LT-EL-BL-EI DRAWING DIRECTORY	LT-EL-BL-EI-PPS-1210-91 DRAWING NUMBER	A REV
COMPUTER REPRODUCIBLE	SCALE: N/A	SHEET 6 OF 38

LT-EL-BL-EI-PPS-1210-91

REV	DESCRIPTION	DATE	BY	CHECKED	APP
	SEE SHEET 1				

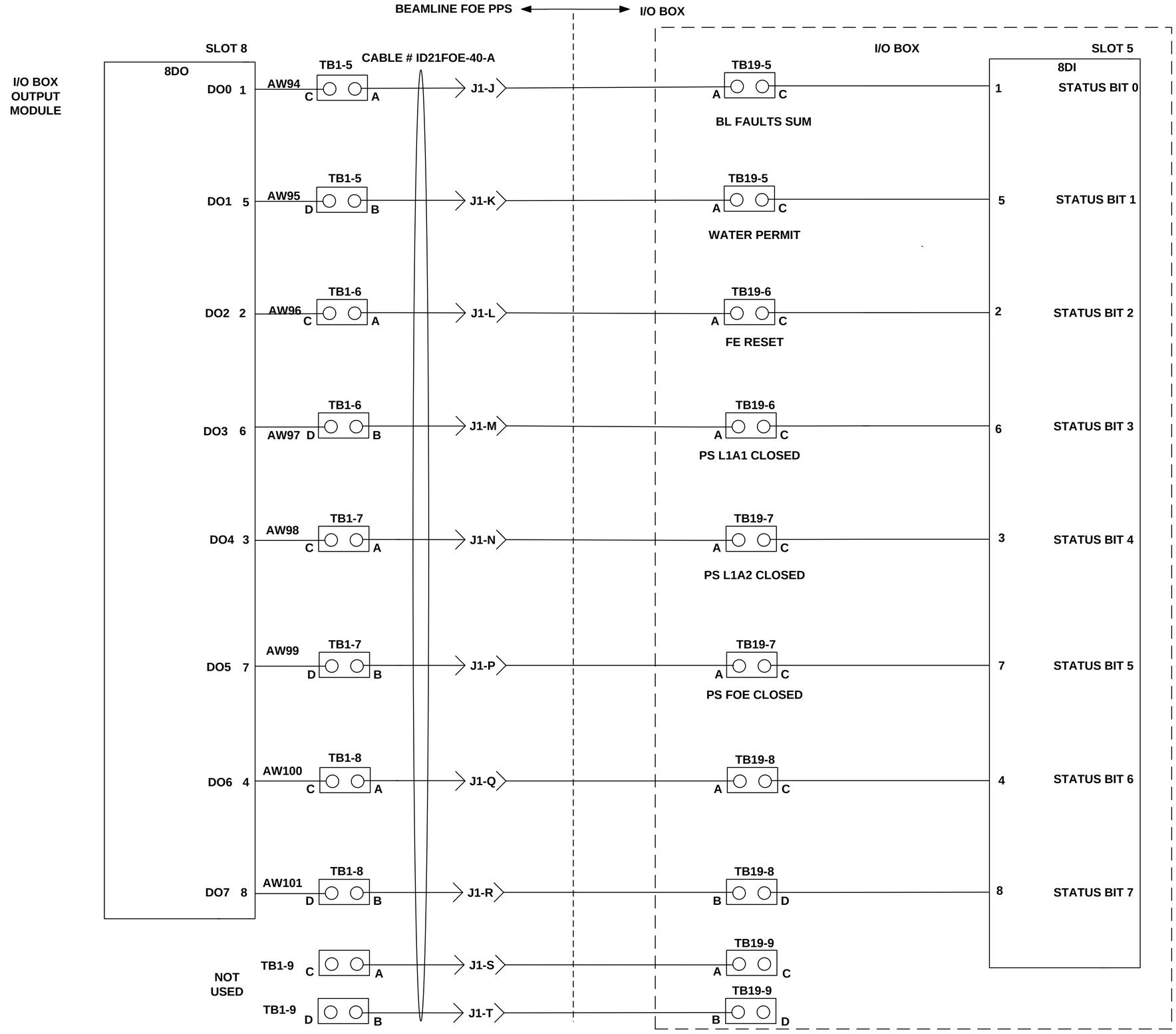

A

LT-EL-BL-EI DRAWING DIRECTORY	LT-EL-BL-EI-PPS-1210-91 DRAWING NUMBER	A REV
COMPUTER REPRODUCIBLE	SCALE: N/A	SHEET 7 OF 38

LT-EL-BL-EI-PPS-1210-91

REV	DESCRIPTION	DATE	BY	CHECKED	APP
	SEE SHEET 1				

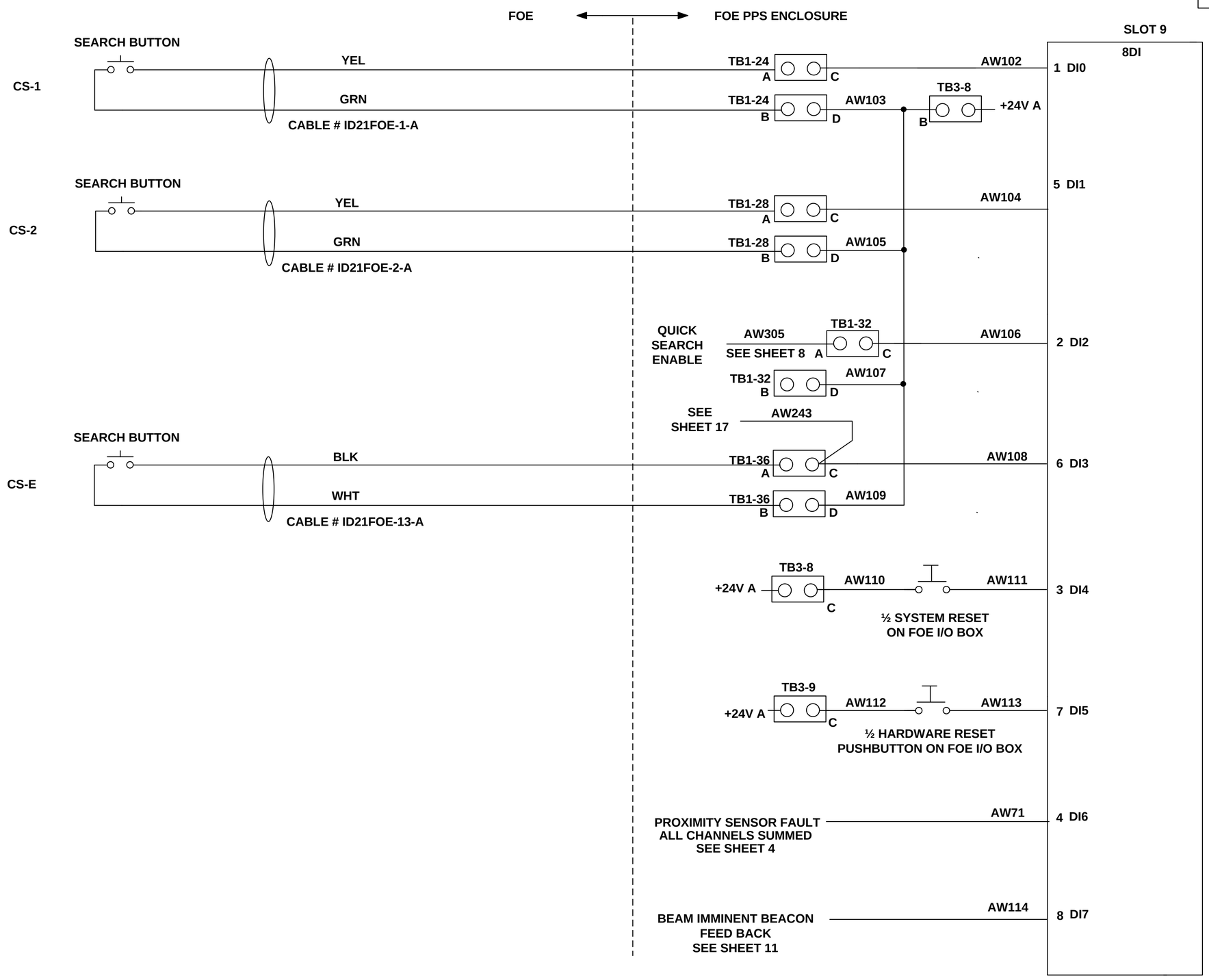

NOTE: WIRE AW103, AW105, AW107, AW109 ARE 16AWG WIRES

A

LT-EL-BL-EI DRAWING DIRECTORY	LT-EL-BL-EI-PPS-1210-91 DRAWING NUMBER	A REV
COMPUTER REPRODUCIBLE	SCALE: N/A	SHEET 8 OF 38

LT-EL-BL-EI-PPS-1210-91

REV	DESCRIPTION	DATE	BY	CHECKED	APP
	SEE SHEET 1				

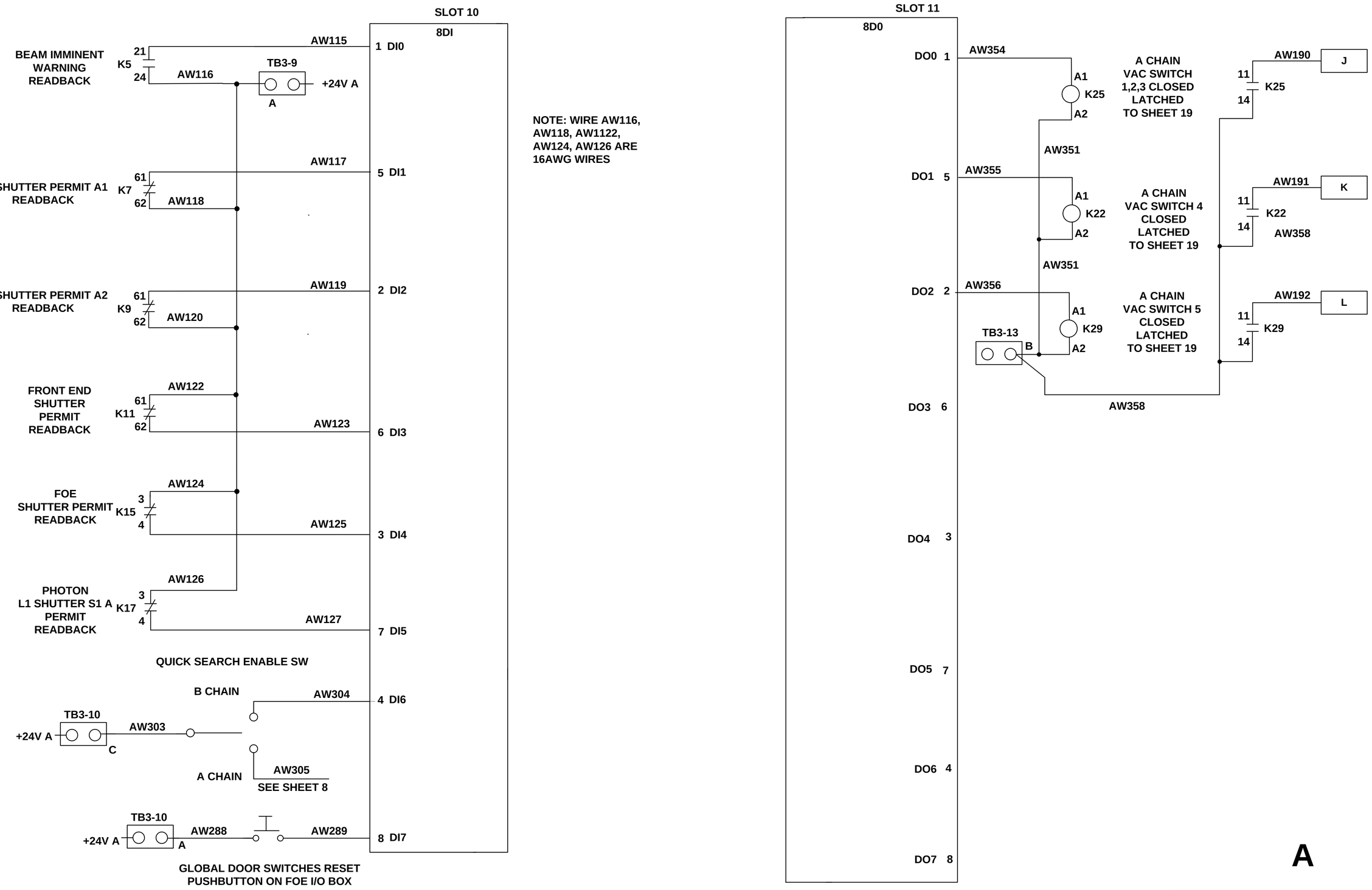

A

LT-EL-BL-EI	LT-EL-BL-EI-PPS-1210-91	A
DRAWING DIRECTORY	DRAWING NUMBER	REV

COMPUTER REPRODUCIBLE | SCALE: N/A | SHEET 9 OF 38

LT-EL-BL-EI-PPS-1210-91

REV	DESCRIPTION	DATE	BY	CHECKED	APP
	SEE SHEET 1				

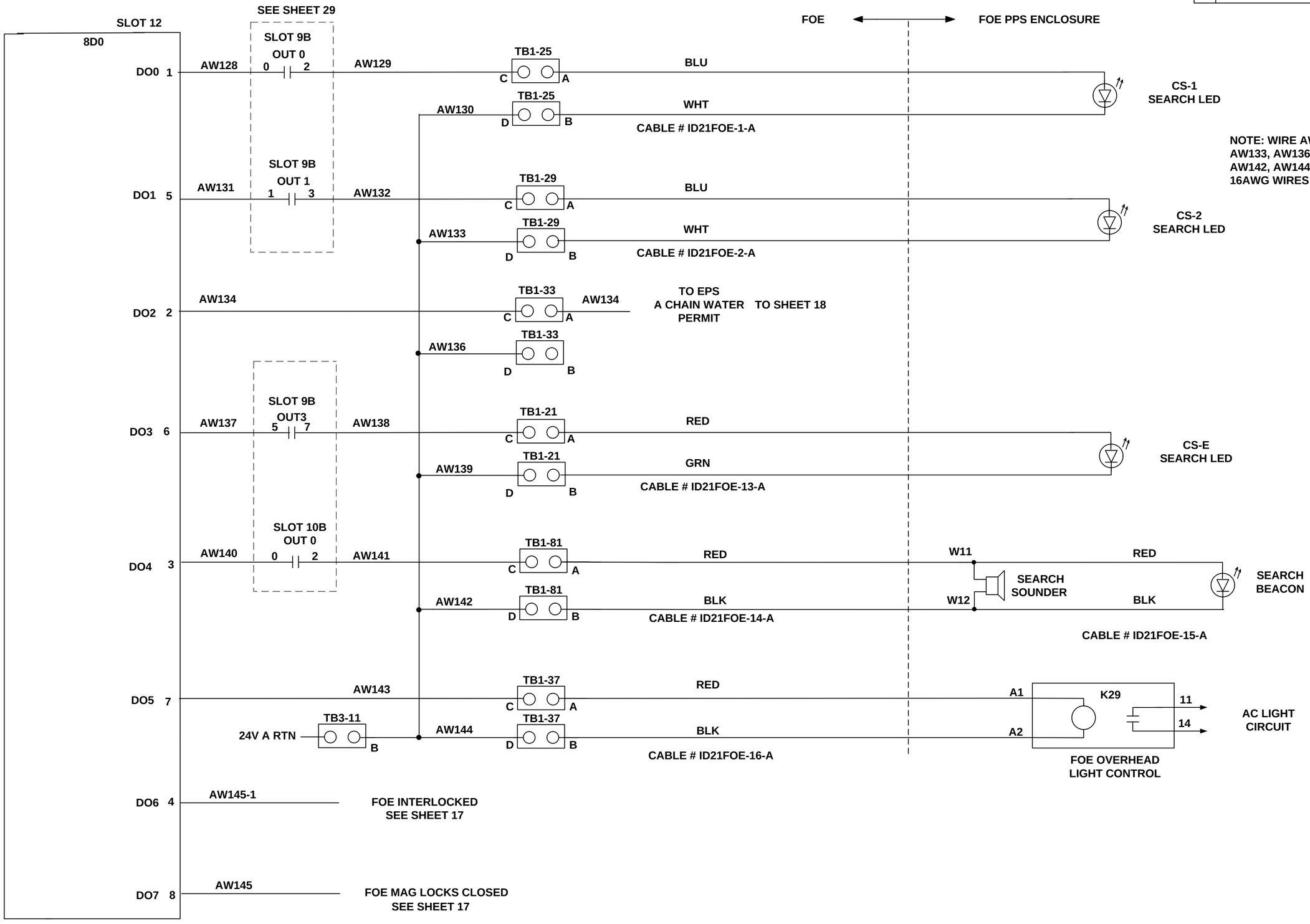

NOTE: WIRE AW130, AW133, AW136, AW139, AW142, AW144 ARE 16AWG WIRES

A

LT-EL-BL-EI	LT-EL-BL-EI-PPS-1210-91	A
DRAWING DIRECTORY	DRAWING NUMBER	REV
COMPUTER REPRODUCIBLE	SCALE: N/A	SHEET 10 OF 38

LT-EL-BL-EI-PPS-1210-91

REV	DESCRIPTION	DATE	BY	CHECKED	APP
	SEE SHEET 1				

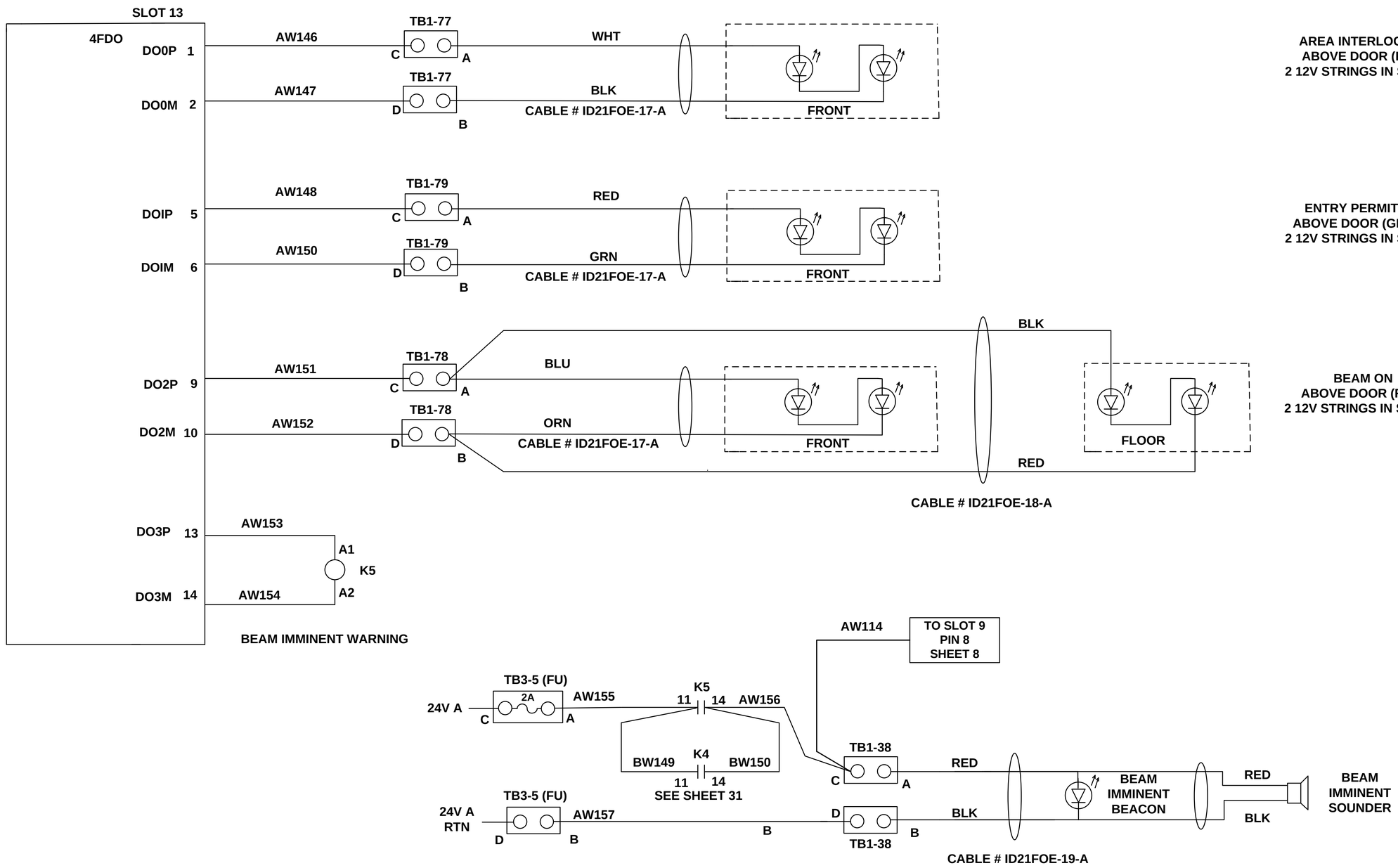

AREA INTERLOCKED
ABOVE DOOR (RED)
2 12V STRINGS IN SERIES

ENTRY PERMITTED
ABOVE DOOR (GREEN)
2 12V STRINGS IN SERIES

BEAM ON
ABOVE DOOR (RED)
2 12V STRINGS IN SERIES

A

LT-EL-BL-EI	LT-EL-BL-EI-PPS-1210-91	A
DRAWING DIRECTORY	DRAWING NUMBER	REV
COMPUTER REPRODUCIBLE	SCALE: N/A	SHEET 11 OF 38

LT-EL-BL-EI-PPS-1210-91

REV	DESCRIPTION	DATE	BY	CHECKED	APP
	SEE SHEET 1				

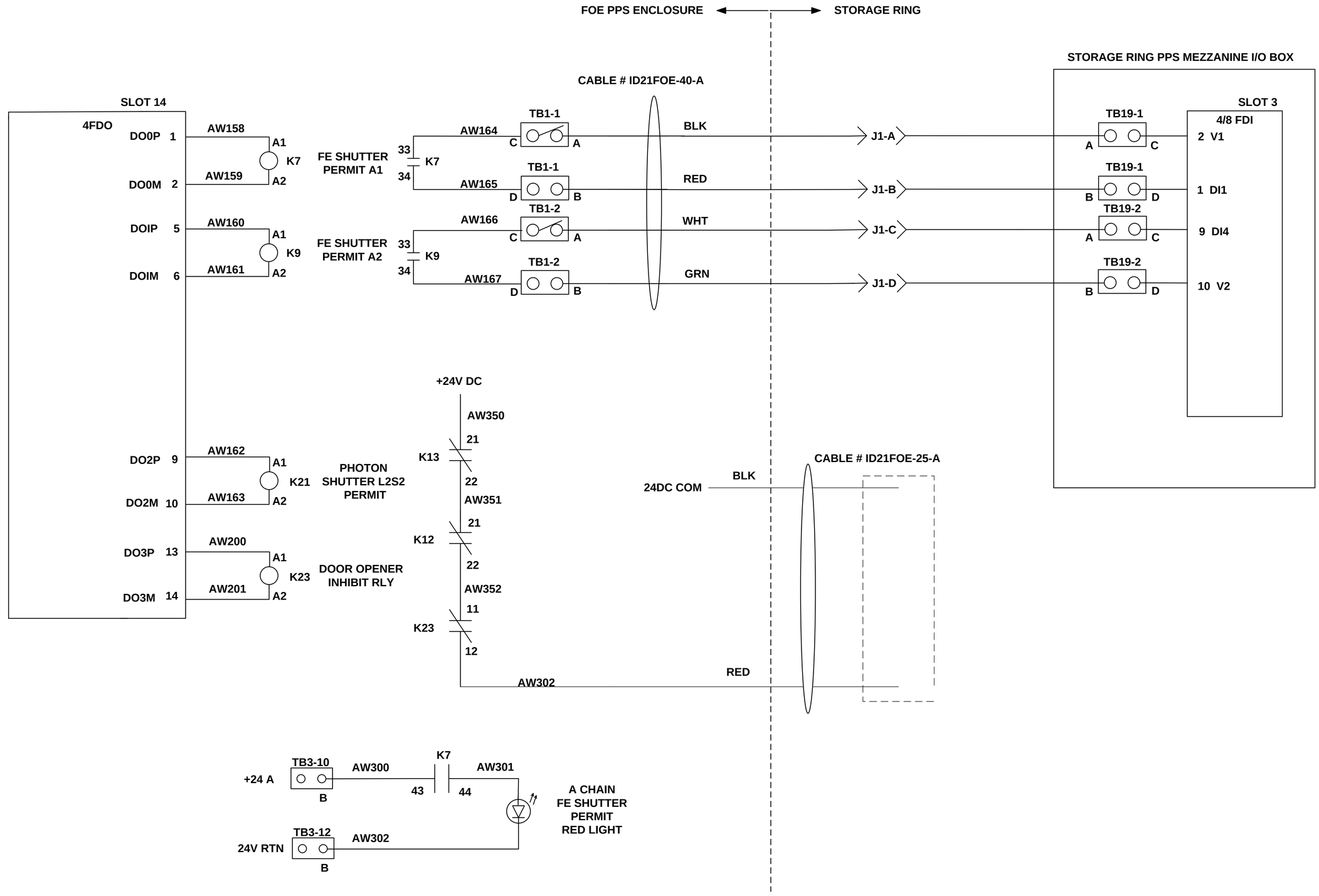

A

LT-EL-BL-EI DRAWING DIRECTORY	LT-EL-BL-EI-PPS-1210-91 DRAWING NUMBER	A REV
COMPUTER REPRODUCIBLE	SCALE: N/A	SHEET 12 OF 38

LT-EL-BL-EI-PPS-1210-91

REV	DESCRIPTION	DATE	BY	CHECKED	APP
	SEE SHEET 1				

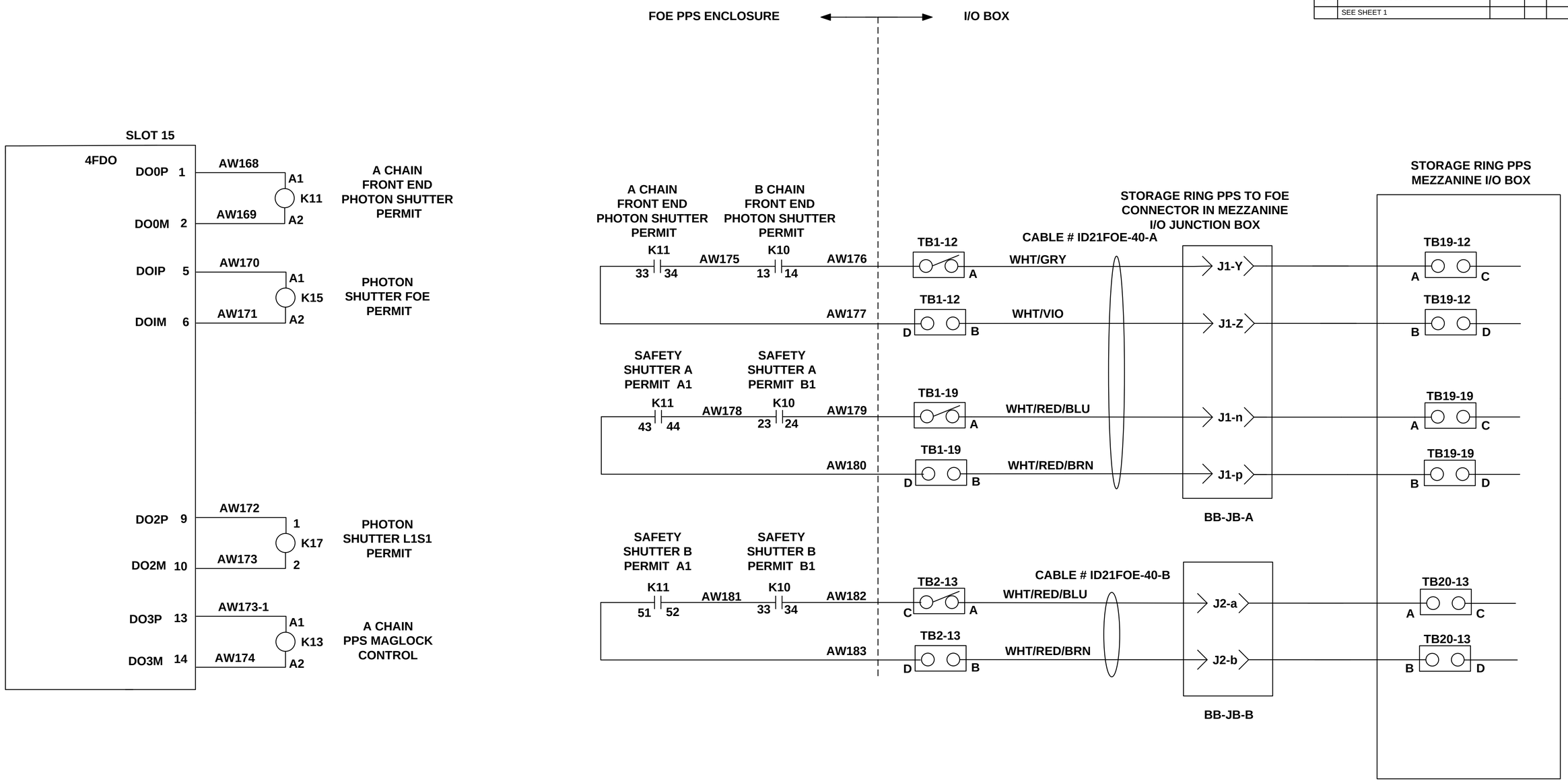

A

LT-EL-BL-EI	LT-EL-BL-EI-PPS-1210-91	A
DRAWING DIRECTORY	DRAWING NUMBER	REV

COMPUTER REPRODUCIBLE | SCALE: N/A | SHEET 13 OF 38

LT-EL-BL-EI-PPS-1210-91

REV	DESCRIPTION	DATE	BY	CHECKED	APP
	SEE SHEET 1				

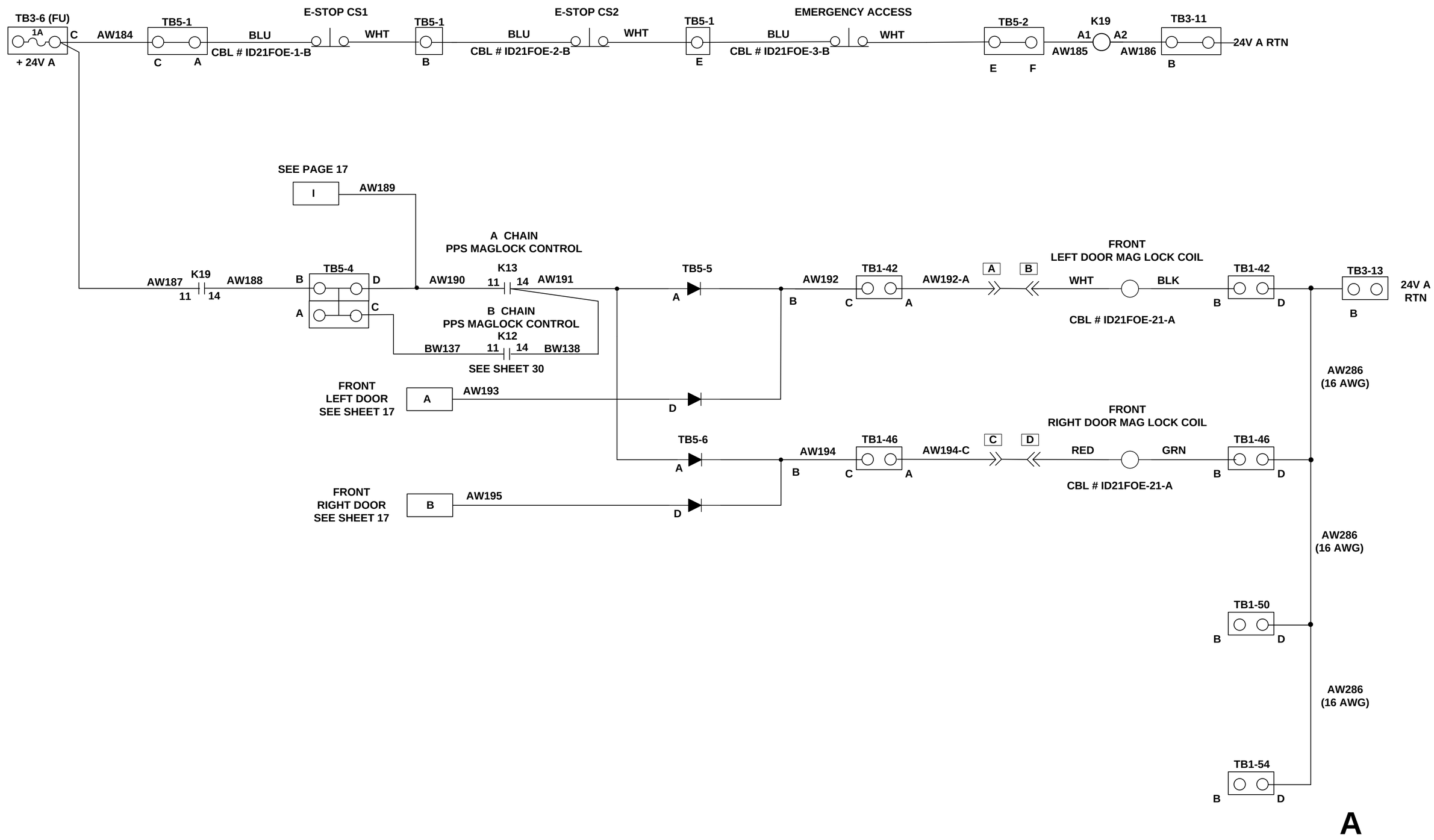

A

LT-EL-BL-EI	LT-EL-BL-EI-PPS-1210-91	A
DRAWING DIRECTORY	DRAWING NUMBER	REV
COMPUTER REPRODUCIBLE	SCALE: N/A	SHEET 14 OF 38

LT-EL-BL-EI-PPS-1210-91

REV	DESCRIPTION	DATE	BY	CHECKED	APP
	SEE SHEET 1				

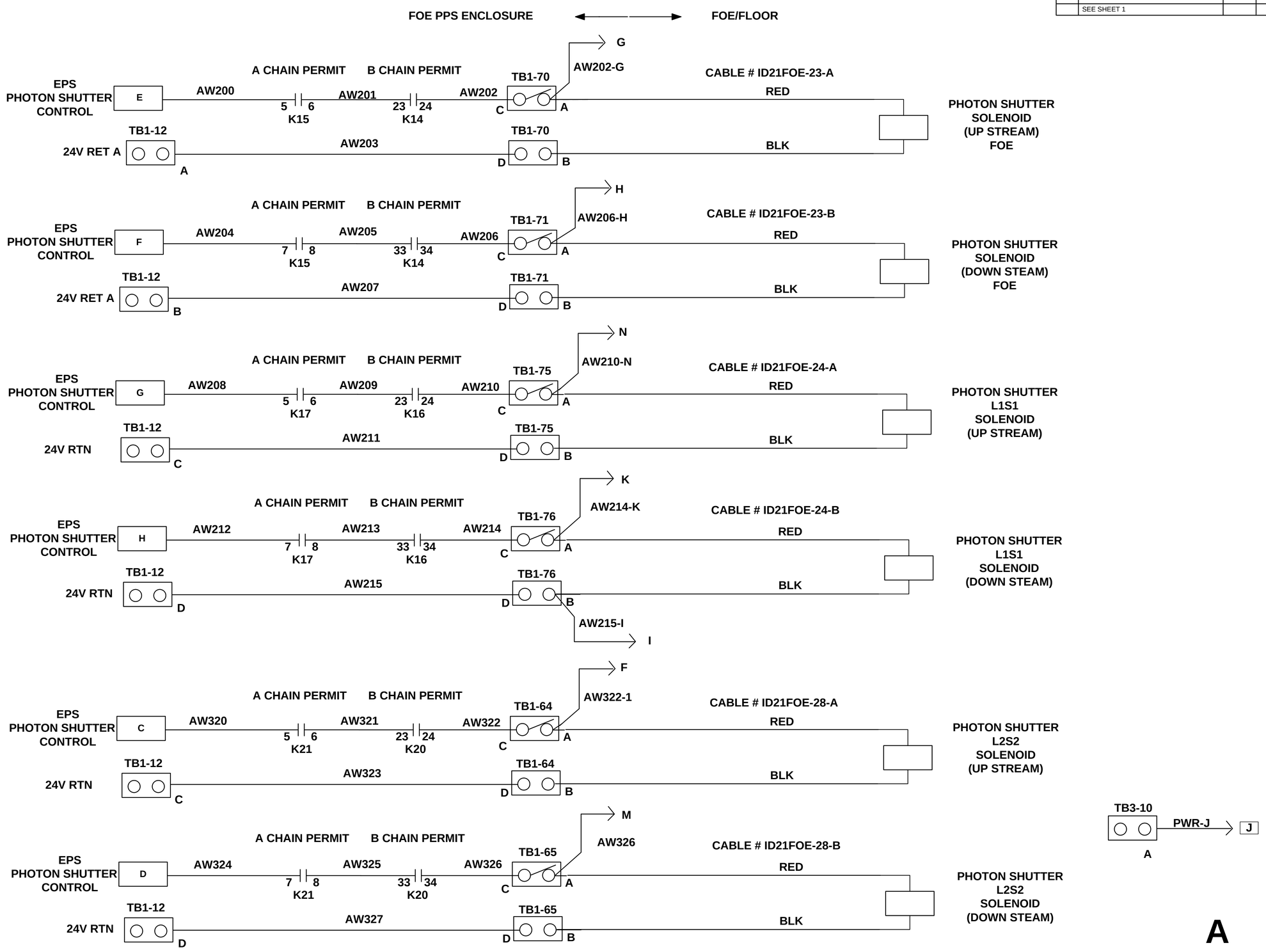

A

LT-EL-BL-EI	LT-EL-BL-EI-PPS-1210-91	A
DRAWING DIRECTORY	DRAWING NUMBER	REV

COMPUTER REPRODUCIBLE | SCALE: N/A | SHEET 15 OF 38

LT-EL-BL-EI-PPS-1210-91

REV	DESCRIPTION	DATE	BY	CHECKED	APP
	SEE SHEET 1				

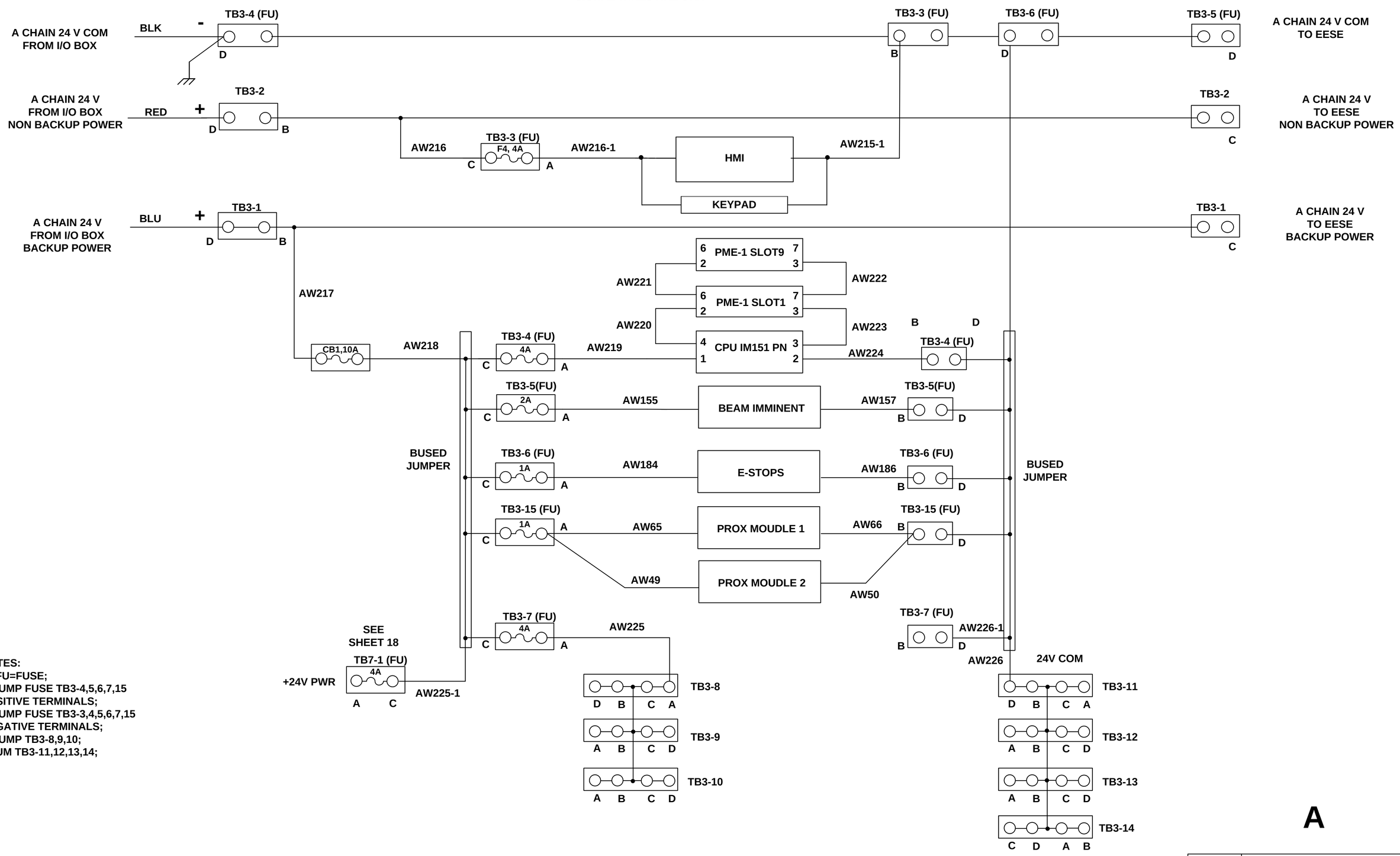

NOTES:
1. FU=FUSE;
2. JUMP FUSE TB3-4,5,6,7,15 POSITIVE TERMINALS;
3. JUMP FUSE TB3-3,4,5,6,7,15 NEGATIVE TERMINALS;
4. JUMP TB3-8,9,10;
5 JUM TB3-11,12,13,14;

A

LT-EL-BL-EI (DRAWING DIRECTORY)	LT-EL-BL-EI-PPS-1210-91 (DRAWING NUMBER)	A (REV)
COMPUTER REPRODUCIBLE	SCALE: N/A	SHEET 16 OF 38

LT-EL-BL-EI-PPS-1210-91

REV	DESCRIPTION	DATE	BY	CHECKED	APP
	SEE SHEET 1				

C CHAIN

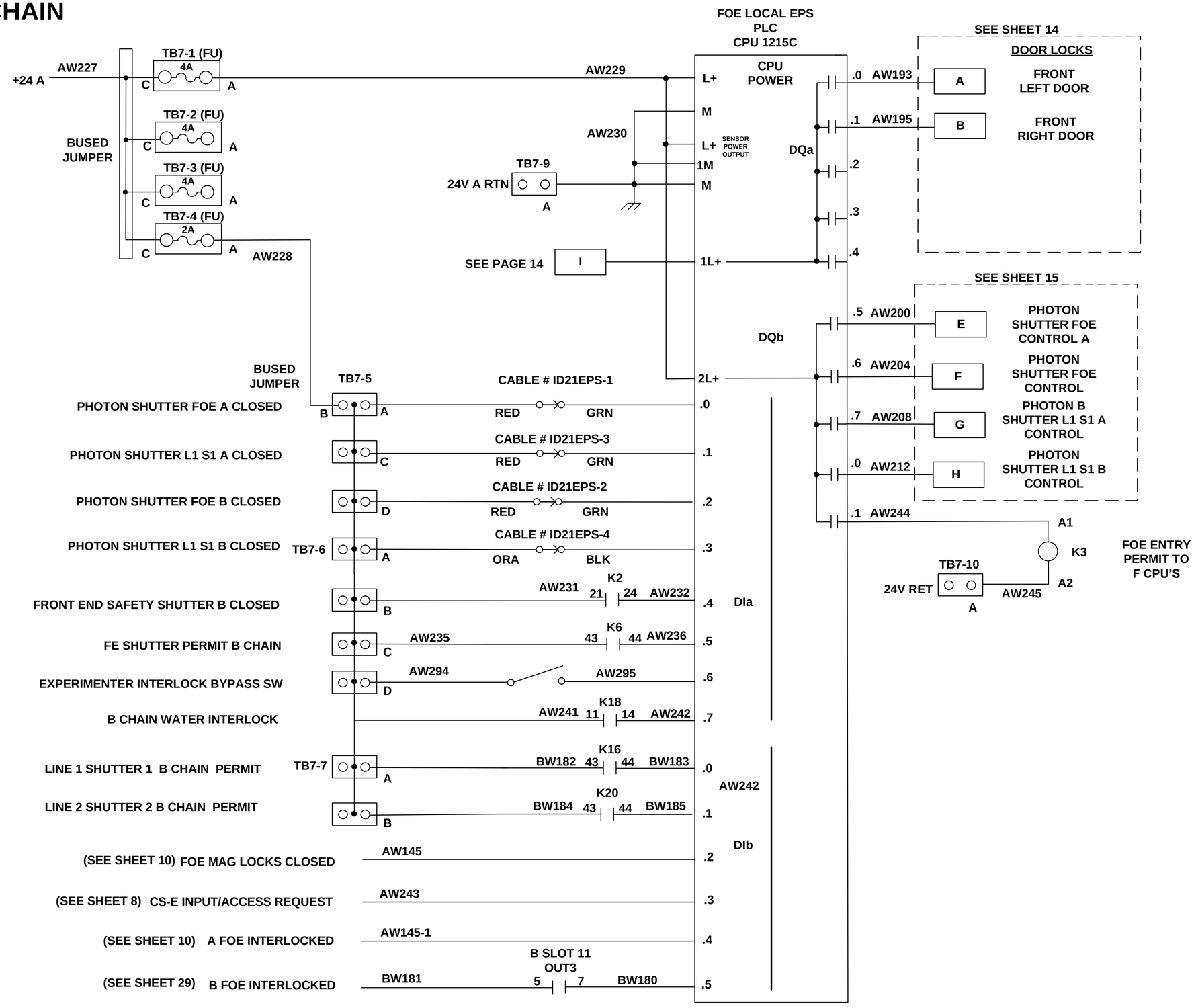

A

LT-EL-BL-EI DRAWING DIRECTORY	LT-EL-BL-EI-PPS-1210-91 DRAWING NUMBER	A REV
COMPUTER REPRODUCIBLE	SCALE: N/A	SHEET 17 OF 38

LT-EL-BL-EI-PPS-1210-91

REV	DESCRIPTION	DATE	BY	CHECKED	APP
	SEE SHEET 1				

C CHAIN

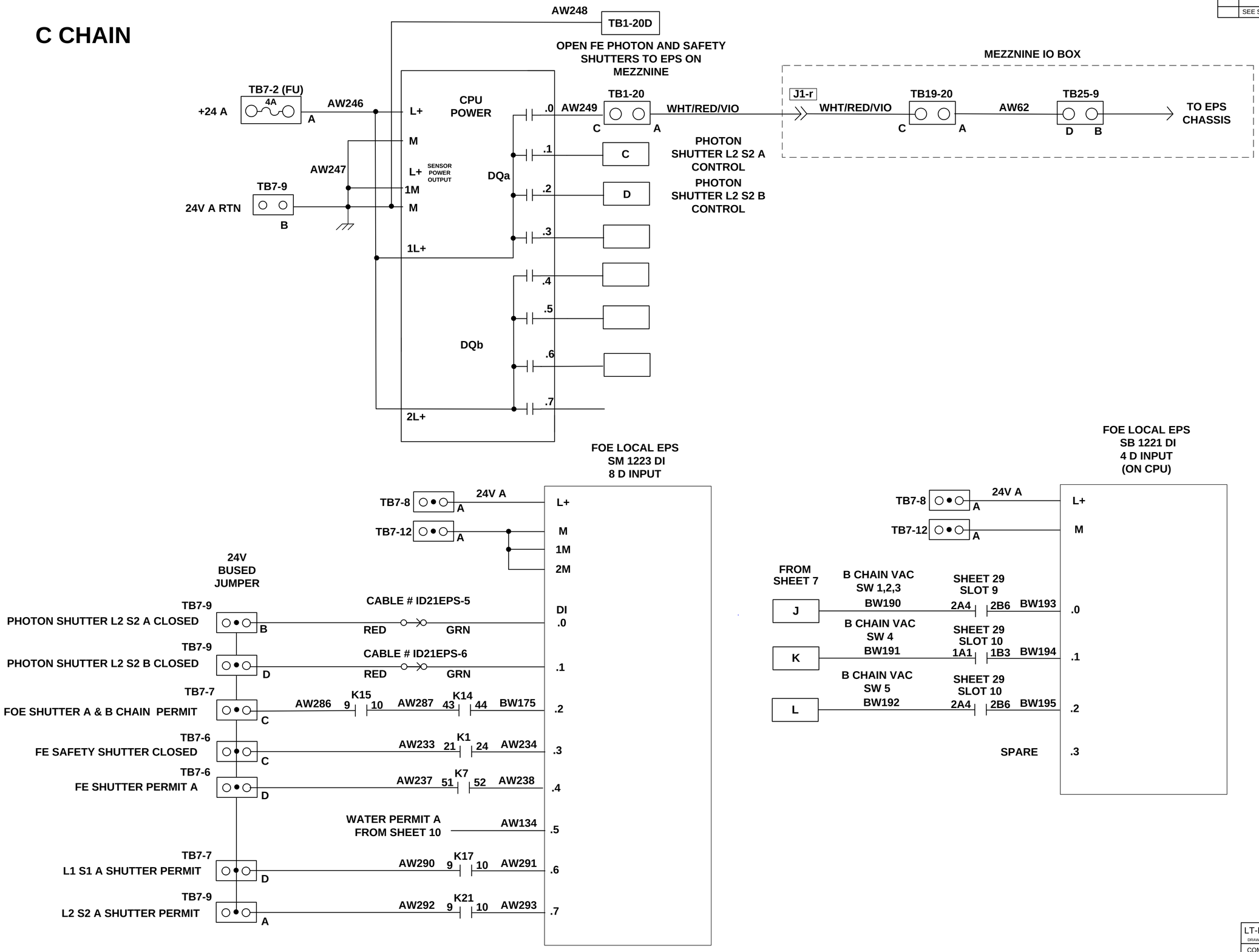

A

LT-EL-BL-EI (DRAWING DIRECTORY)	LT-EL-BL-EI-PPS-1210-91 (DRAWING NUMBER)	A (REV)
COMPUTER REPRODUCIBLE	SCALE: N/A	SHEET 18 OF 38

LT-EL-BL-EI-PPS-1210-91

REV	DESCRIPTION	DATE	BY	CHECKED	APP
	SEE SHEET 1				

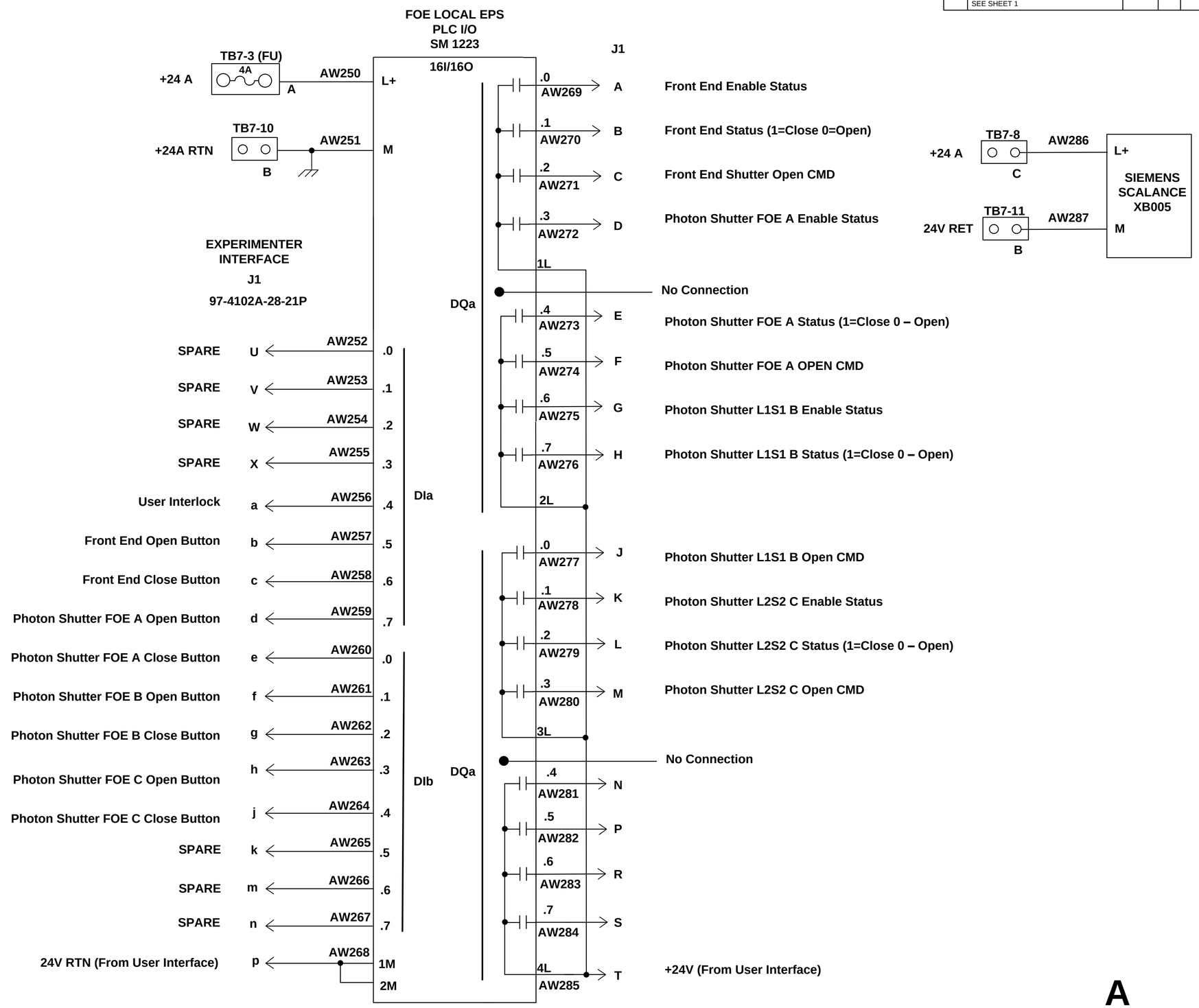

A

LT-EL-BL-EI	LT-EL-BL-EI-PPS-1210-91	A
DRAWING DIRECTORY	DRAWING NUMBER	REV
COMPUTER REPRODUCIBLE	SCALE: N/A	SHEET 19 OF 38

LT-EL-BL-EI-PPS-1210-91

REV	DESCRIPTION	DATE	BY	CHECKED	APP
	SEE SHEET 1				

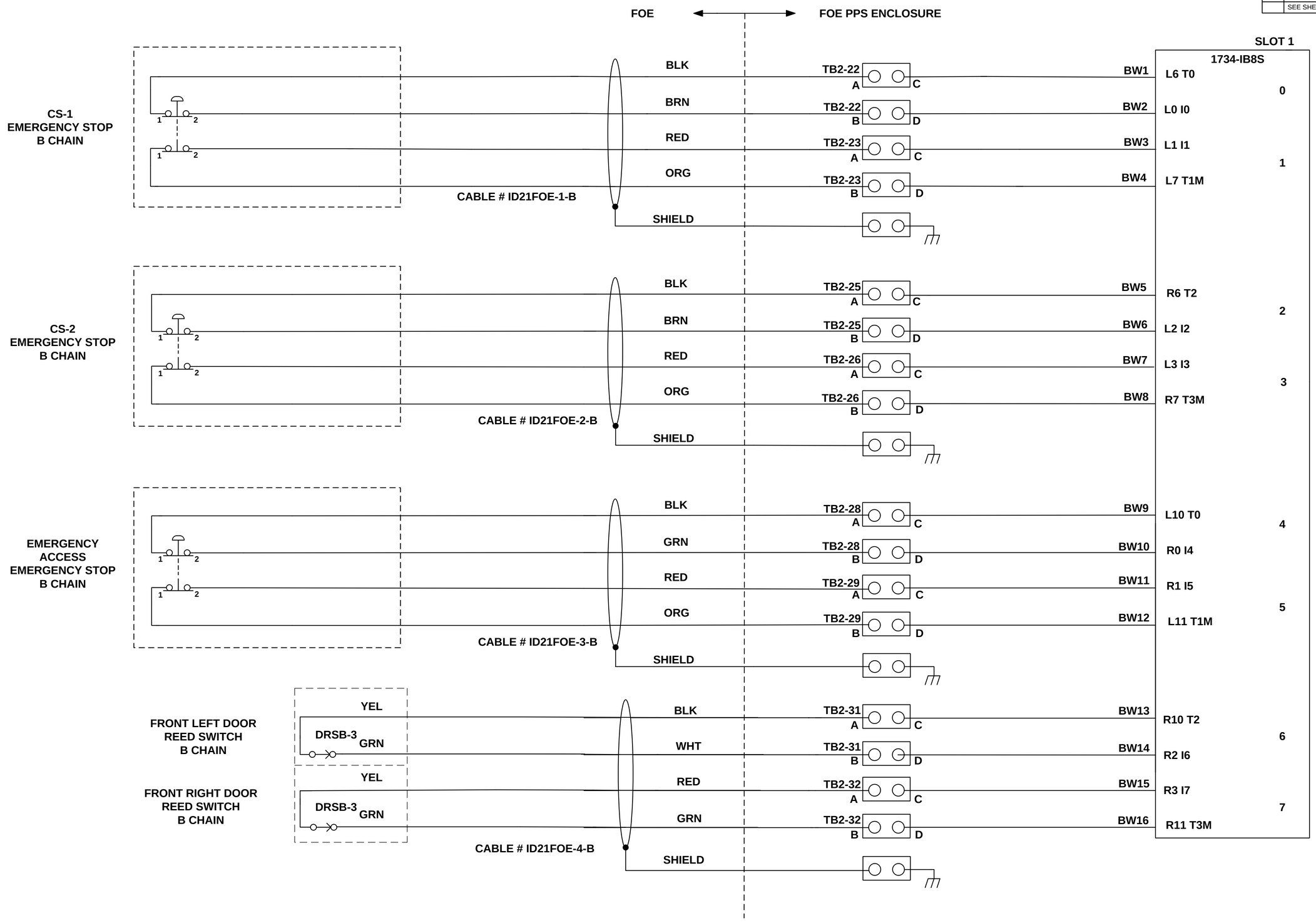

B

LT-EL-BL-EI	LT-EL-BL-EI-PPS-1210-91	A
DRAWING DIRECTORY	DRAWING NUMBER	REV

COMPUTER REPRODUCIBLE | SCALE: N/A | SHEET 20 OF 38

LT-EL-BL-EI-PPS-1210-91

REV	DESCRIPTION	DATE	BY	CHECKED	APP
	SEE SHEET 1				

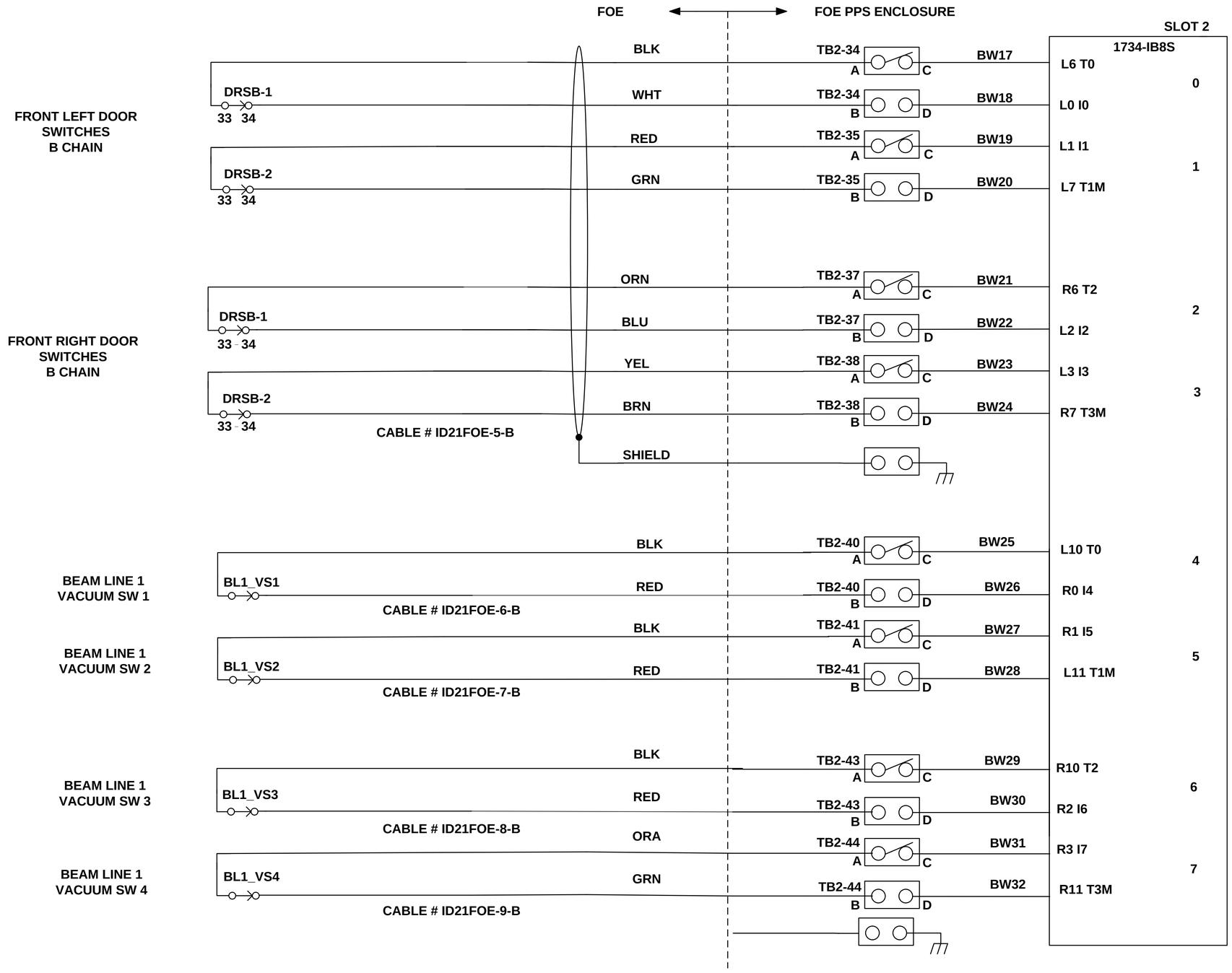

B

LT-EL-BL-EI	LT-EL-BL-EI-PPS-1210-91	A
DRAWING DIRECTORY	DRAWING NUMBER	REV

COMPUTER REPRODUCIBLE | SCALE: N/A | SHEET 21 OF 38

LT-EL-BL-EI-PPS-1210-91

REV	DESCRIPTION	DATE	BY	CHECKED	APP
	SEE SHEET 1				

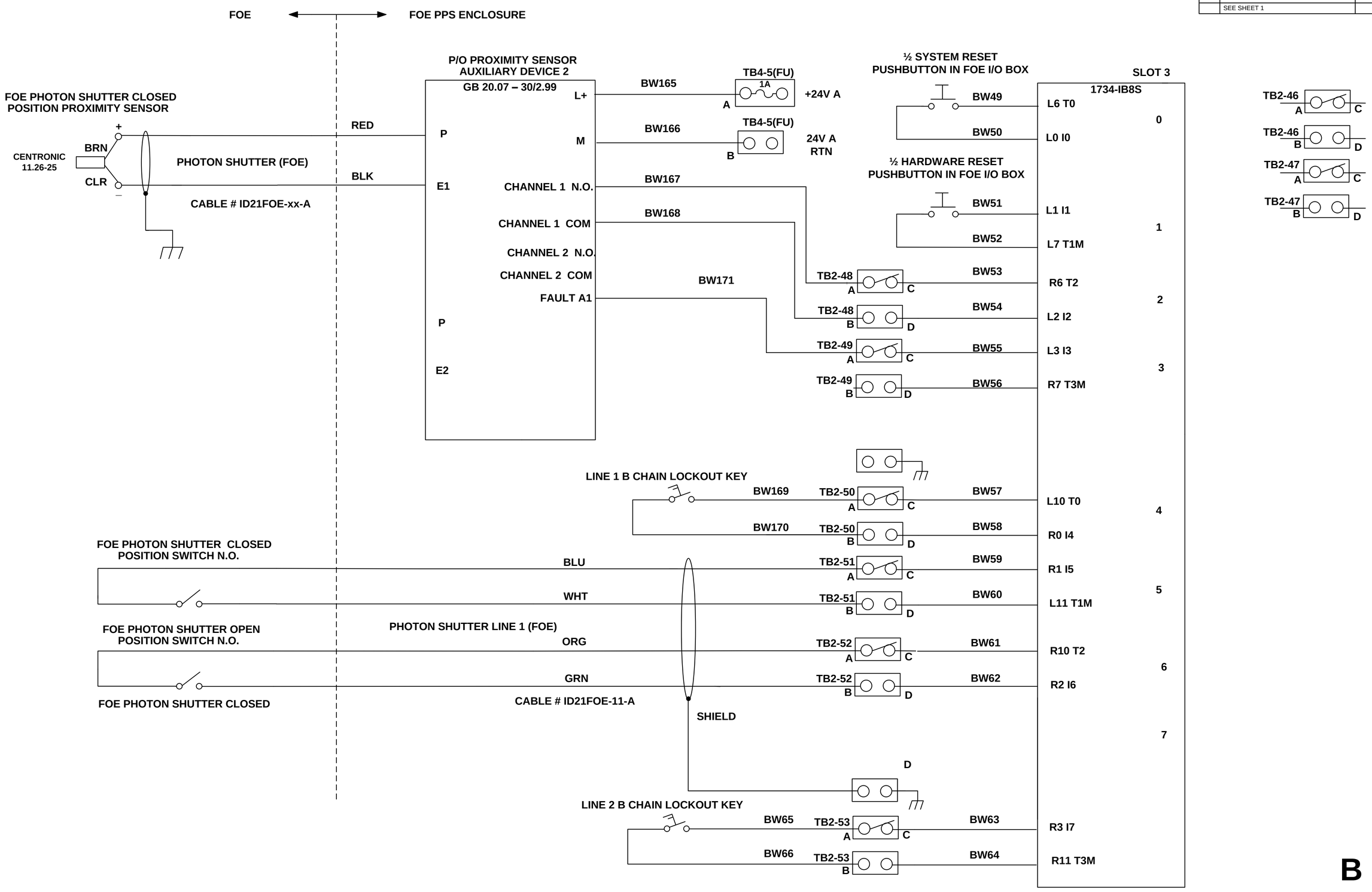

B

LT-EL-BL-EI	LT-EL-BL-EI-PPS-1210-91	A
DRAWING DIRECTORY	DRAWING NUMBER	REV
COMPUTER REPRODUCIBLE	SCALE: N/A	SHEET 22 OF 38

LT-EL-BL-EI-PPS-1210-91

REV	DESCRIPTION	DATE	BY	CHECKED	APP
	SEE SHEET 1				

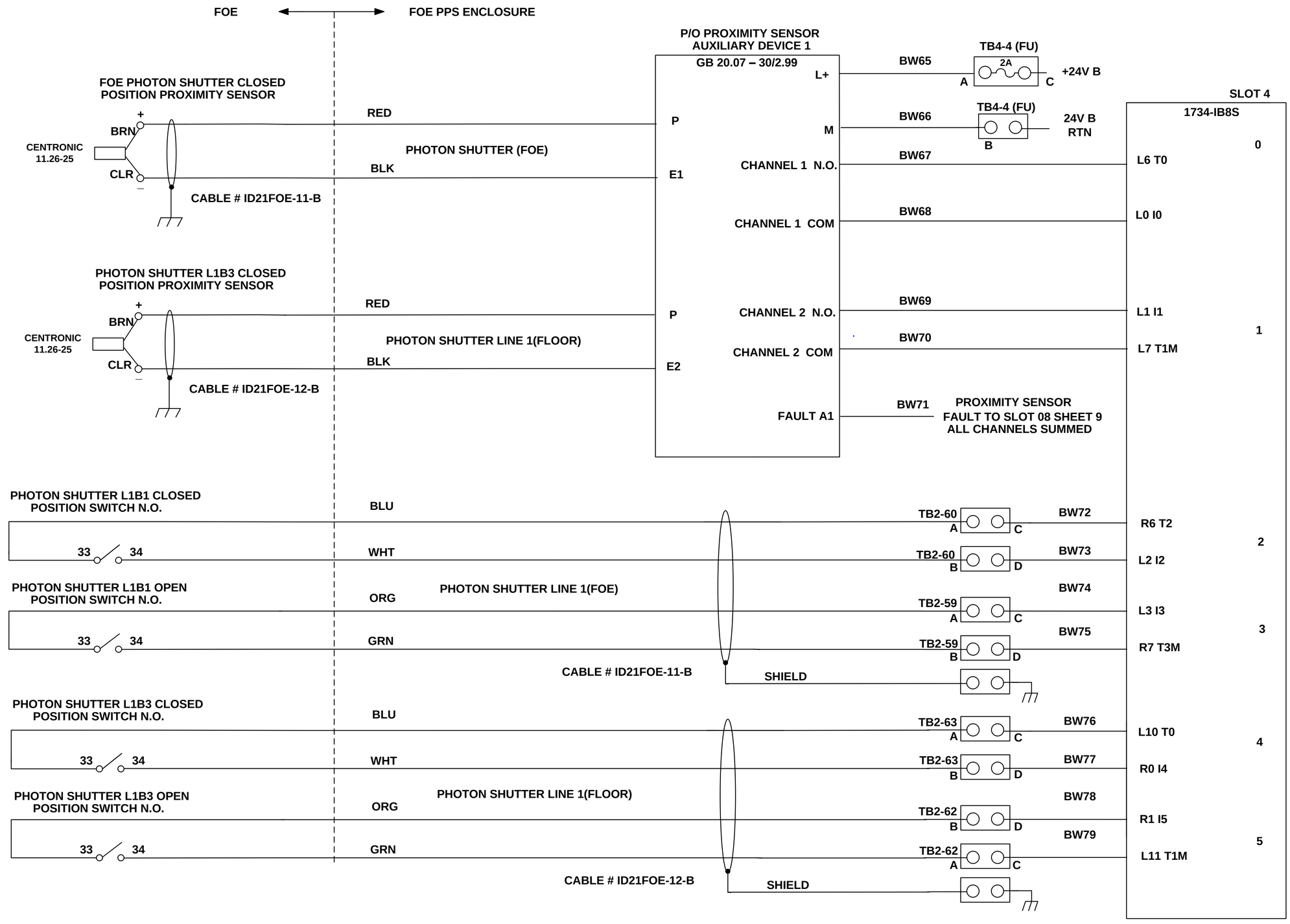

B

LT-EL-BL-EI	LT-EL-BL-EI-PPS-1210-91	A
DRAWING DIRECTORY	DRAWING NUMBER	REV

COMPUTER REPRODUCIBLE | SCALE: N/A | SHEET 23 OF 38

LT-EL-BL-EI-PPS-1210-91

REV	DESCRIPTION	DATE	BY	CHECKED	APP
	SEE SHEET 1				

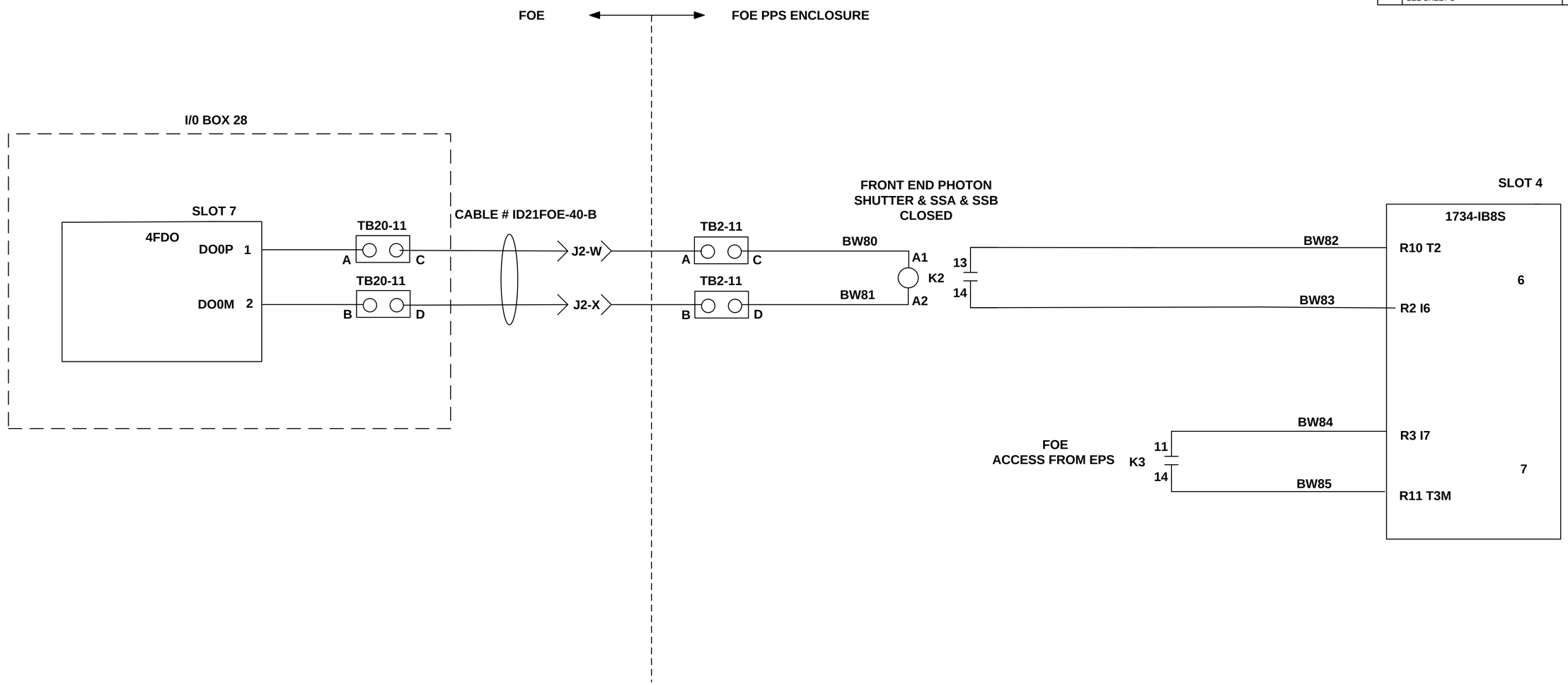

B

LT-EL-BL-EI	LT-EL-BL-EI-PPS-1210-91	A
DRAWING DIRECTORY	DRAWING NUMBER	REV

COMPUTER REPRODUCIBLE | SCALE: N/A | SHEET 24 OF 38

LT-EL-BL-EI-PPS-1210-91

REV	DESCRIPTION	DATE	BY	CHECKED	APP
	SEE SHEET 1				

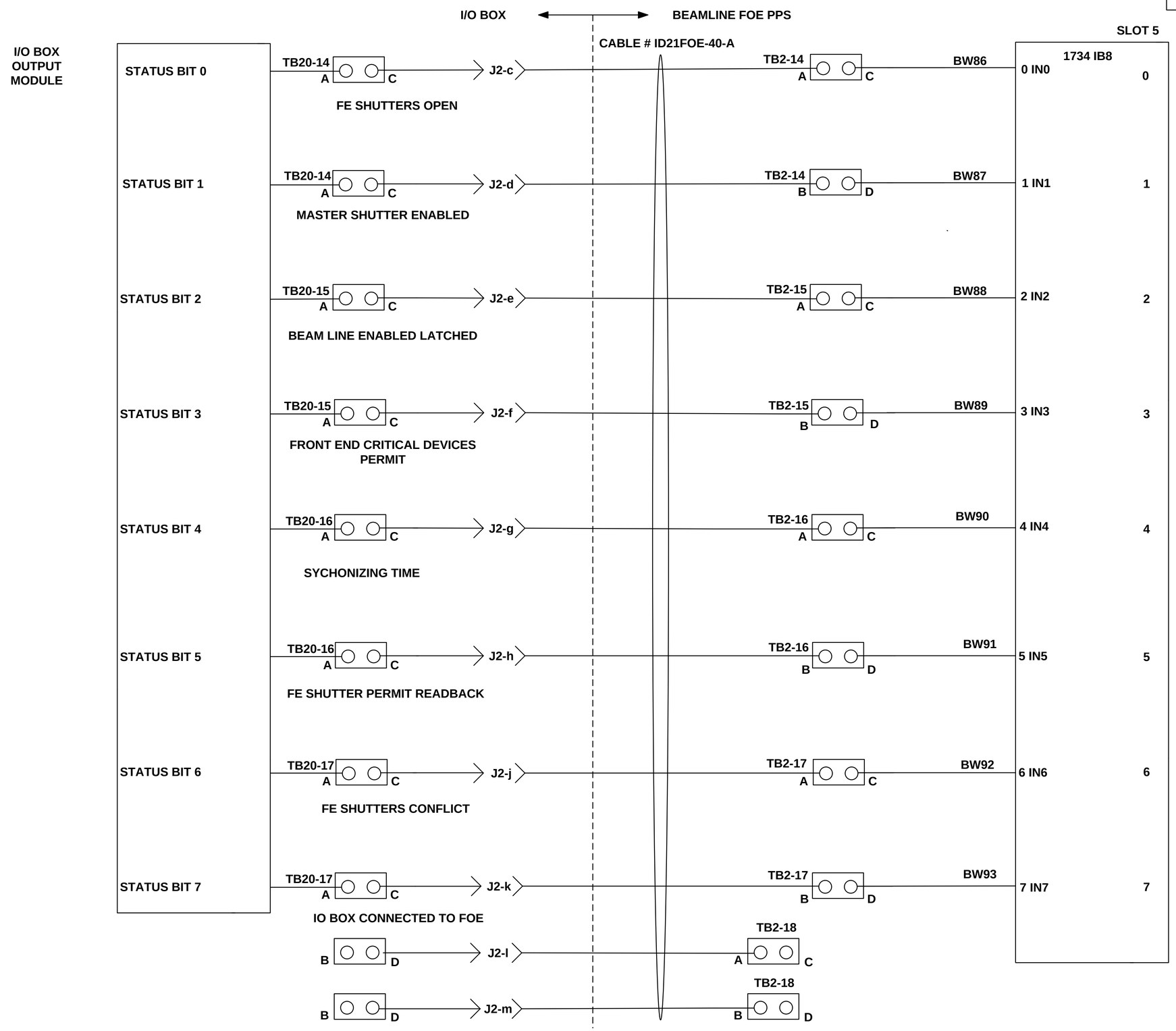

B

LT-EL-BL-EI (DRAWING DIRECTORY)	LT-EL-BL-EI-PPS-1210-91 (DRAWING NUMBER)	A (REV)
COMPUTER REPRODUCIBLE	SCALE: N/A	SHEET 25 OF 38

LT-EL-BL-EI-PPS-1210-91

REV	DESCRIPTION	DATE	BY	CHECKED	APP
	SEE SHEET 1				

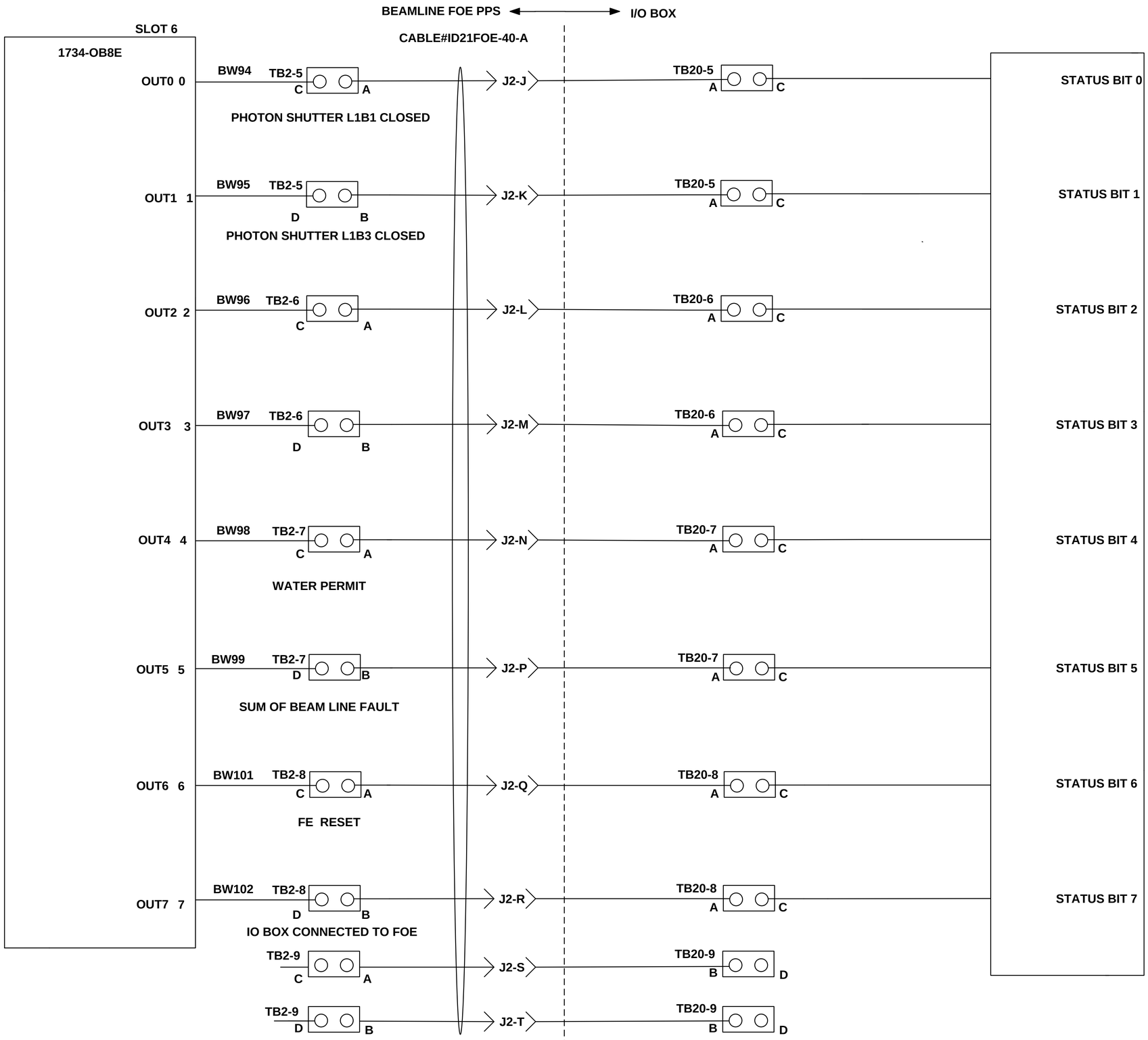

B

LT-EL-BL-EI (DRAWING DIRECTORY)	LT-EL-BL-EI-PPS-1210-91 (DRAWING NUMBER)	A (REV)
COMPUTER REPRODUCIBLE	SCALE: N/A	SHEET 26 OF 38

LT-EL-BL-EI-PPS-1210-91

REV	DESCRIPTION	DATE	BY	CHECKED	APP
	SEE SHEET 1				

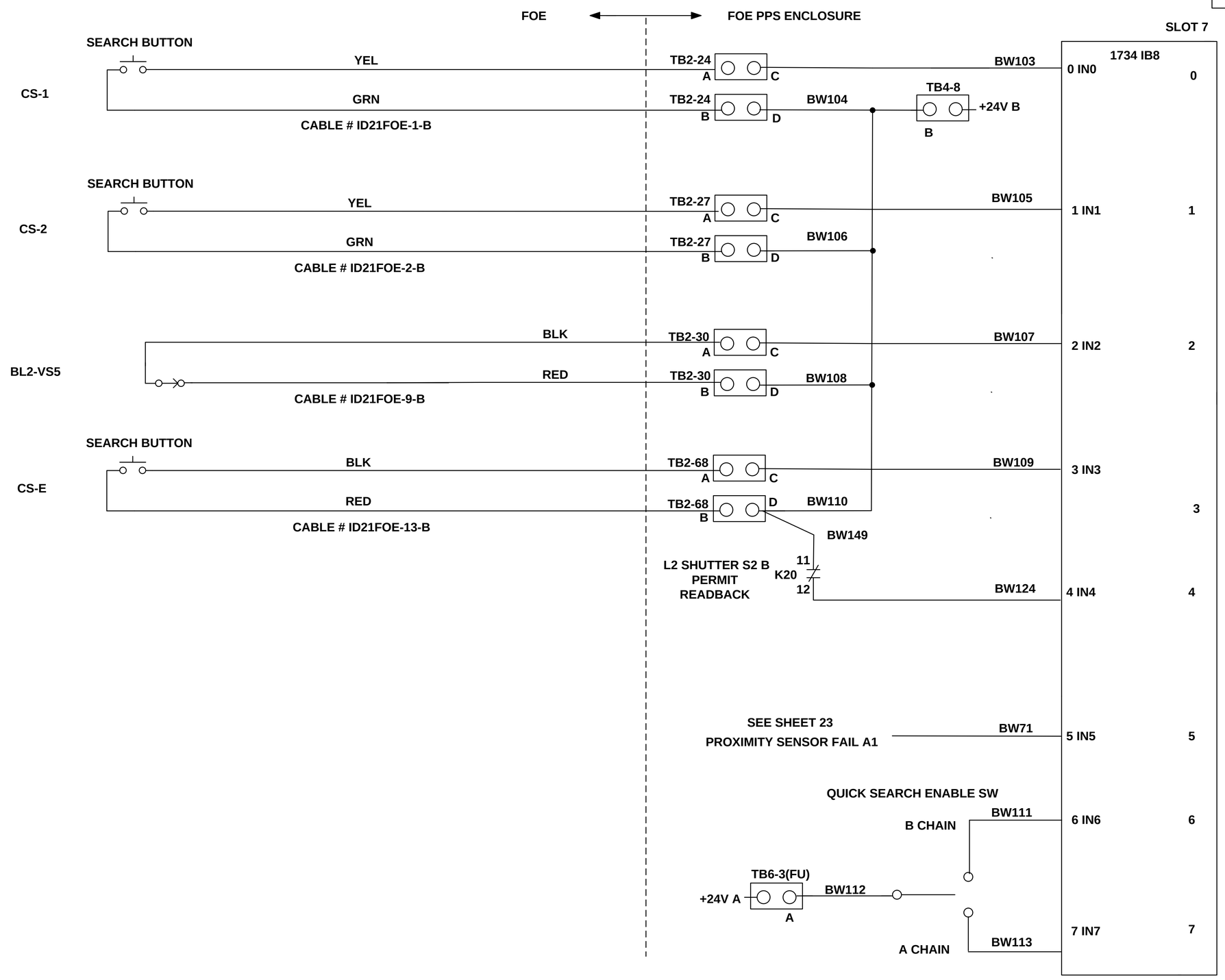

B

LT-EL-BL-EI	LT-EL-BL-EI-PPS-1210-91	A
DRAWING DIRECTORY	DRAWING NUMBER	REV

COMPUTER REPRODUCIBLE | SCALE: N/A | SHEET 27 OF 38

LT-EL-BL-EI-PPS-1210-91

REV	DESCRIPTION	DATE	BY	CHECKED	APP
	SEE SHEET 1				

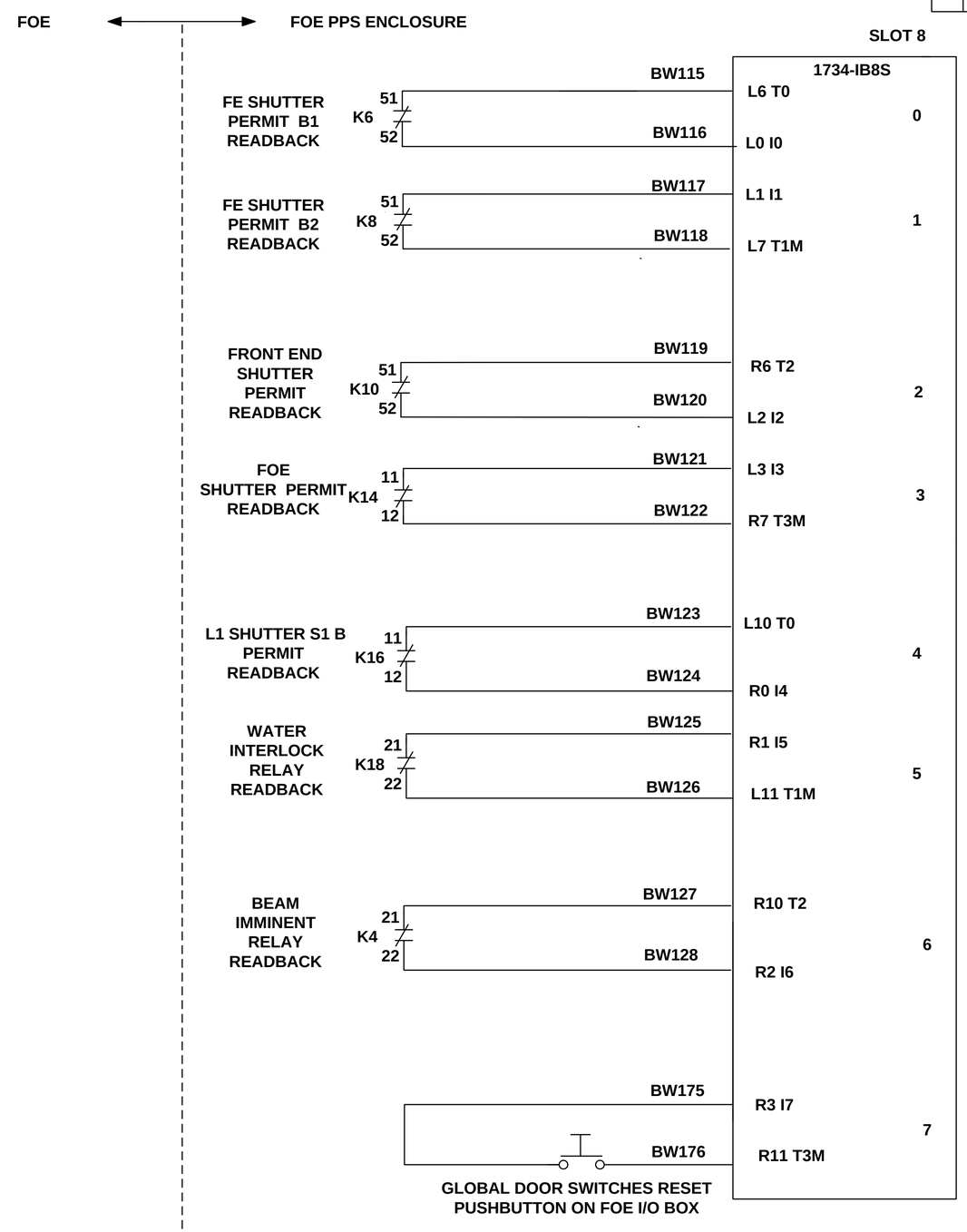

B

LT-EL-BL-EI (DRAWING DIRECTORY)	LT-EL-BL-EI-PPS-1210-91 (DRAWING NUMBER)	A (REV)
COMPUTER REPRODUCIBLE	SCALE: N/A	SHEET 28 OF 38

LT-EL-BL-EI-PPS-1210-91

REV	DESCRIPTION	DATE	BY	CHECKED	APP
	SEE SHEET 1				

FOE ⟷ FOE PPS ENCLOSURE

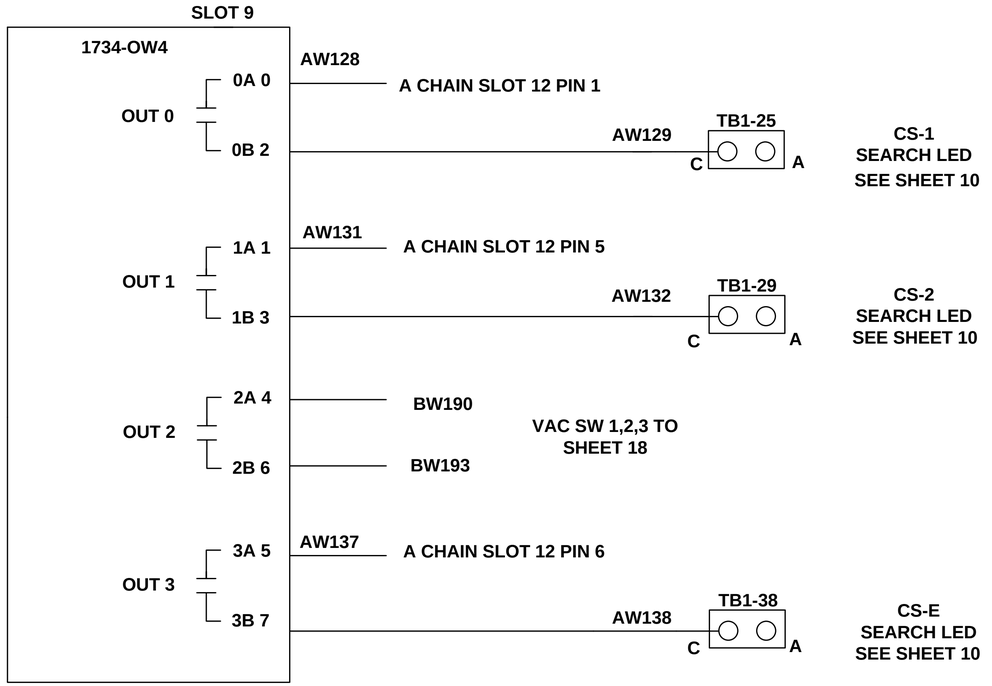

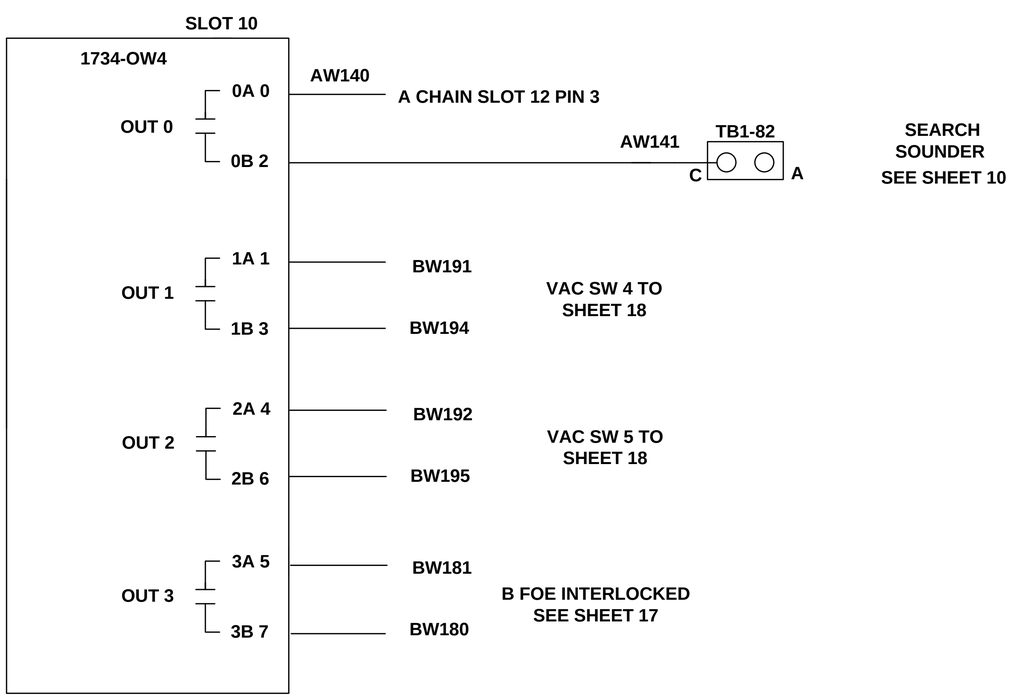

B

LT-EL-BL-EI (DRAWING DIRECTORY)	LT-EL-BL-EI-PPS-1210-91 (DRAWING NUMBER)	A (REV)
COMPUTER REPRODUCIBLE	SCALE: N/A	SHEET 29 OF 38

LT-EL-BL-EI-PPS-1210-91

REV	DESCRIPTION	DATE	BY	CHECKED	APP
	SEE SHEET 1				

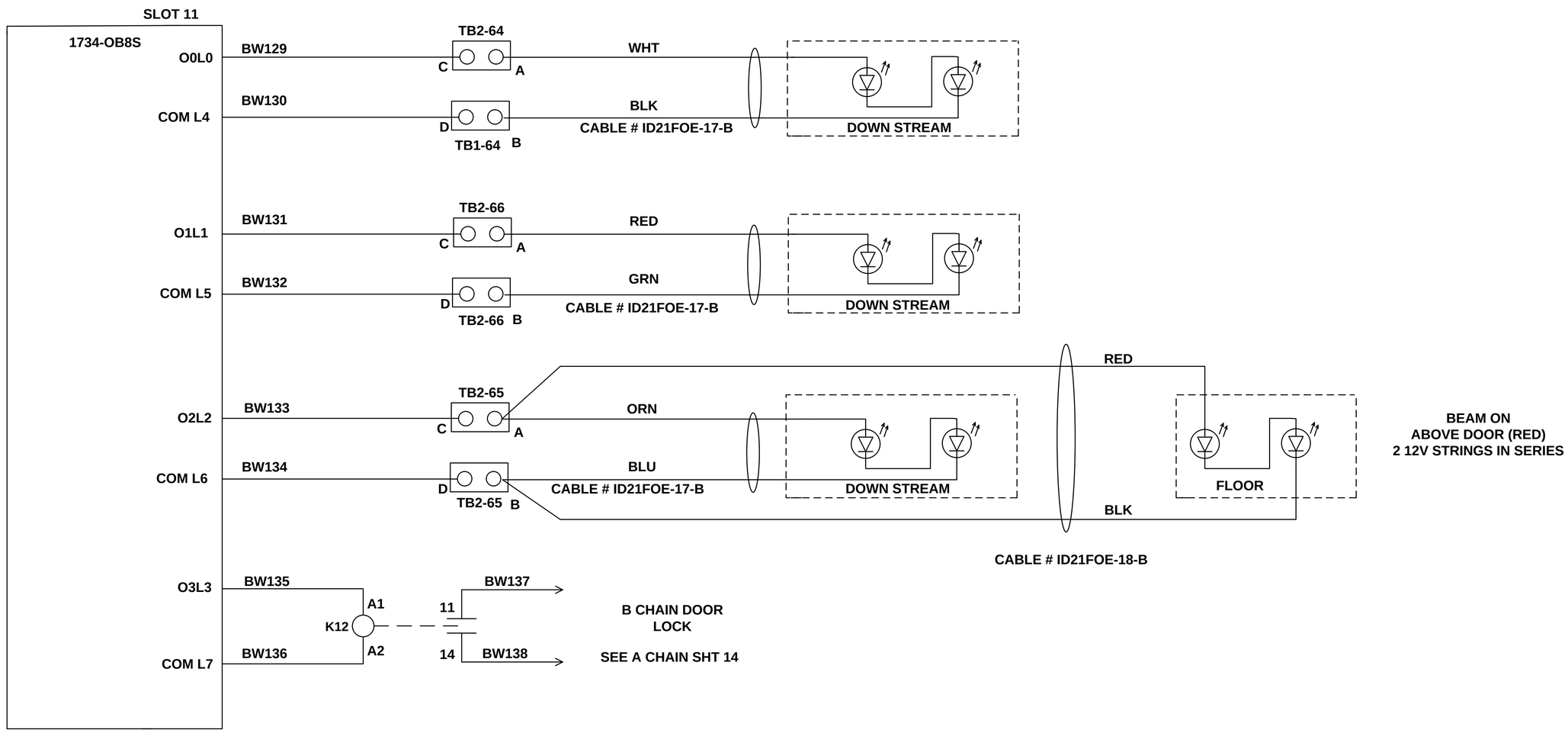

B

LT-EL-BL-EI	LT-EL-BL-EI-PPS-1210-91	A
DRAWING DIRECTORY	DRAWING NUMBER	REV

COMPUTER REPRODUCIBLE | SCALE: N/A | SHEET 30 OF 38

LT-EL-BL-EI-PPS-1210-91

REV	DESCRIPTION	DATE	BY	CHECKED	APP
	SEE SHEET 1				

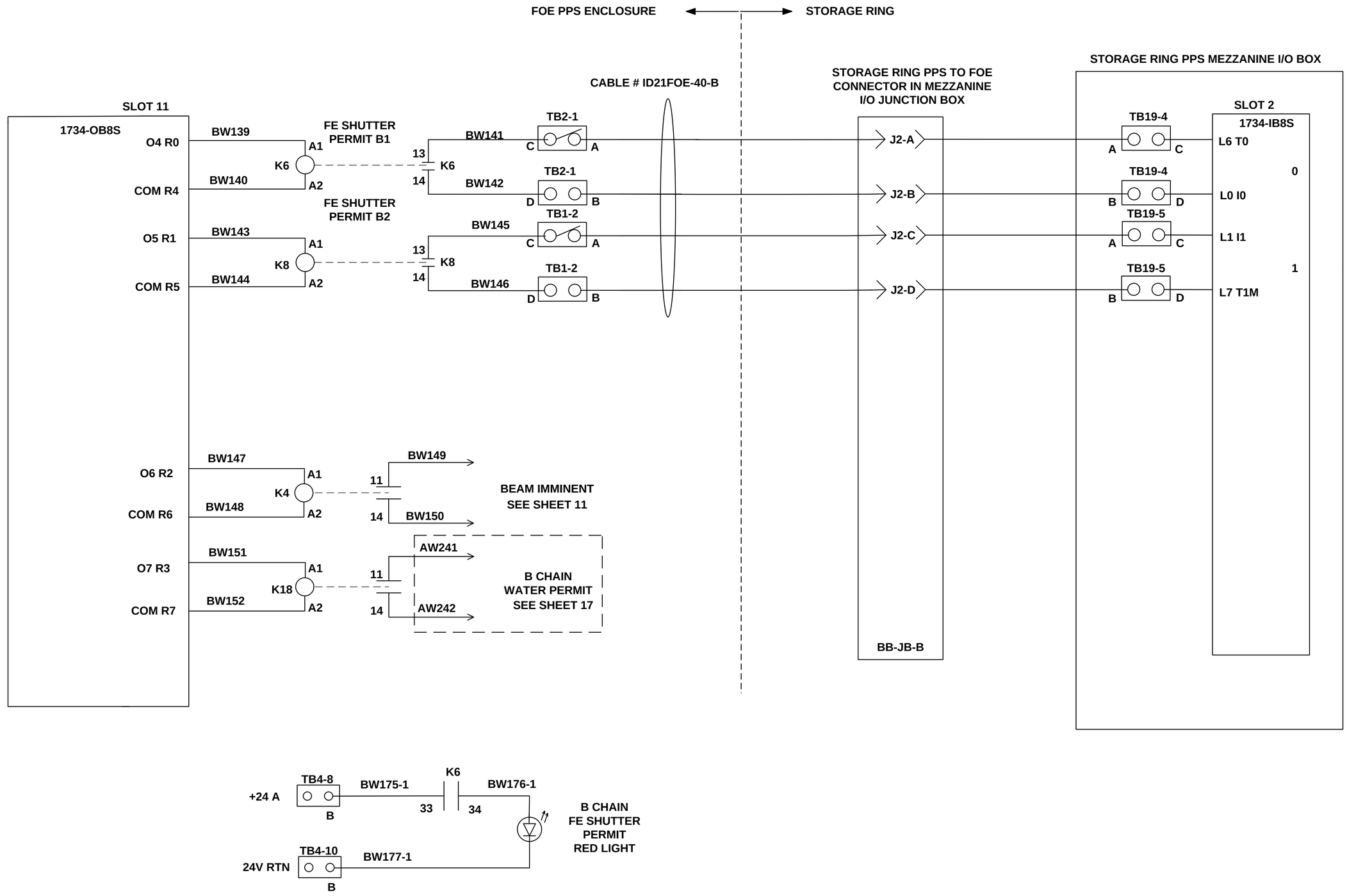

B

LT-EL-BL-EI DRAWING DIRECTORY	LT-EL-BL-EI-PPS-1210-91 DRAWING NUMBER	A REV
COMPUTER REPRODUCIBLE	SCALE: N/A	SHEET 31 OF 38

LT-EL-BL-EI-PPS-1210-91

REV	DESCRIPTION	DATE	BY	CHECKED	APP
	SEE SHEET 1				

FOE PPS ENCLOSURE ⟷ I/O BOX

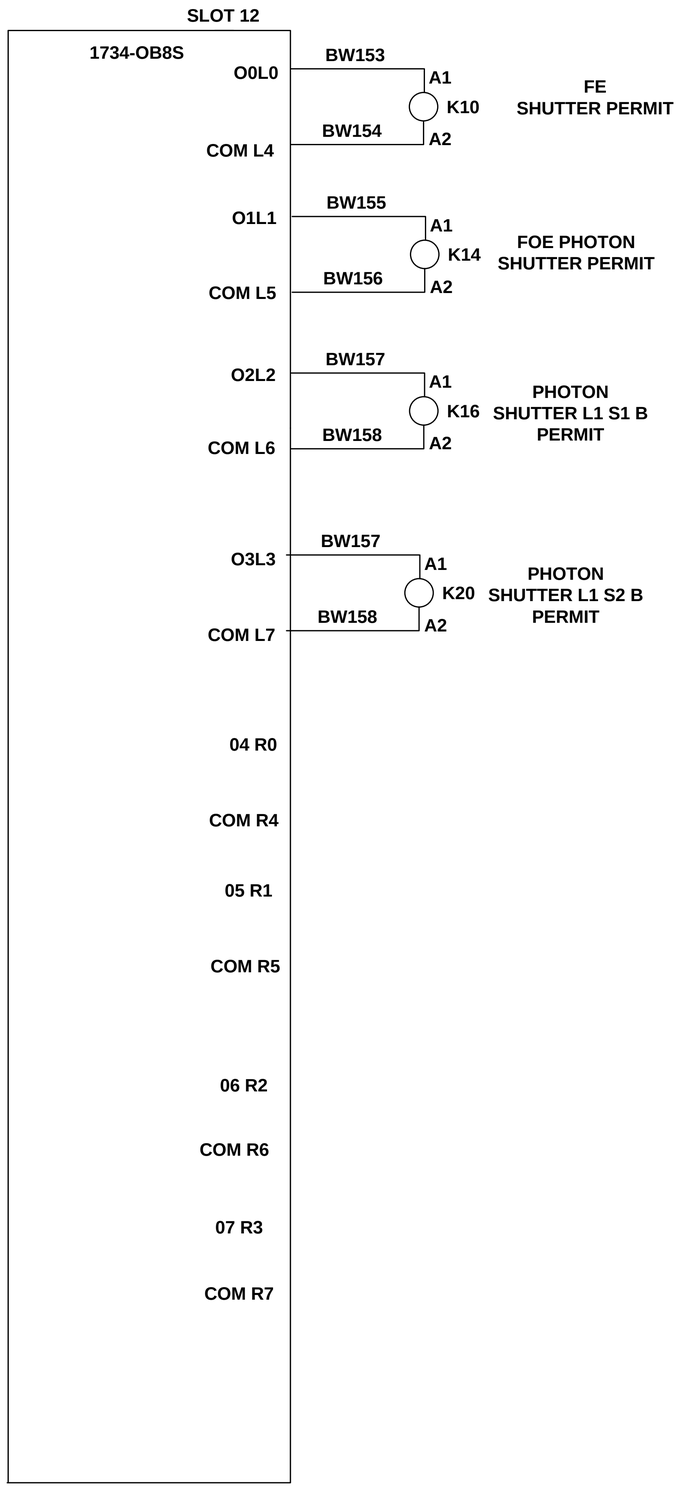

B

LT-EL-BL-EI (DRAWING DIRECTORY)	LT-EL-BL-EI-PPS-1210-91 (DRAWING NUMBER)	A (REV)
COMPUTER REPRODUCIBLE	SCALE: N/A	SHEET 32 OF 38

LT-EL-BL-EI-PPS-1210-91

REV	DESCRIPTION	DATE	BY	CHECKED	APP
	SEE SHEET 1				

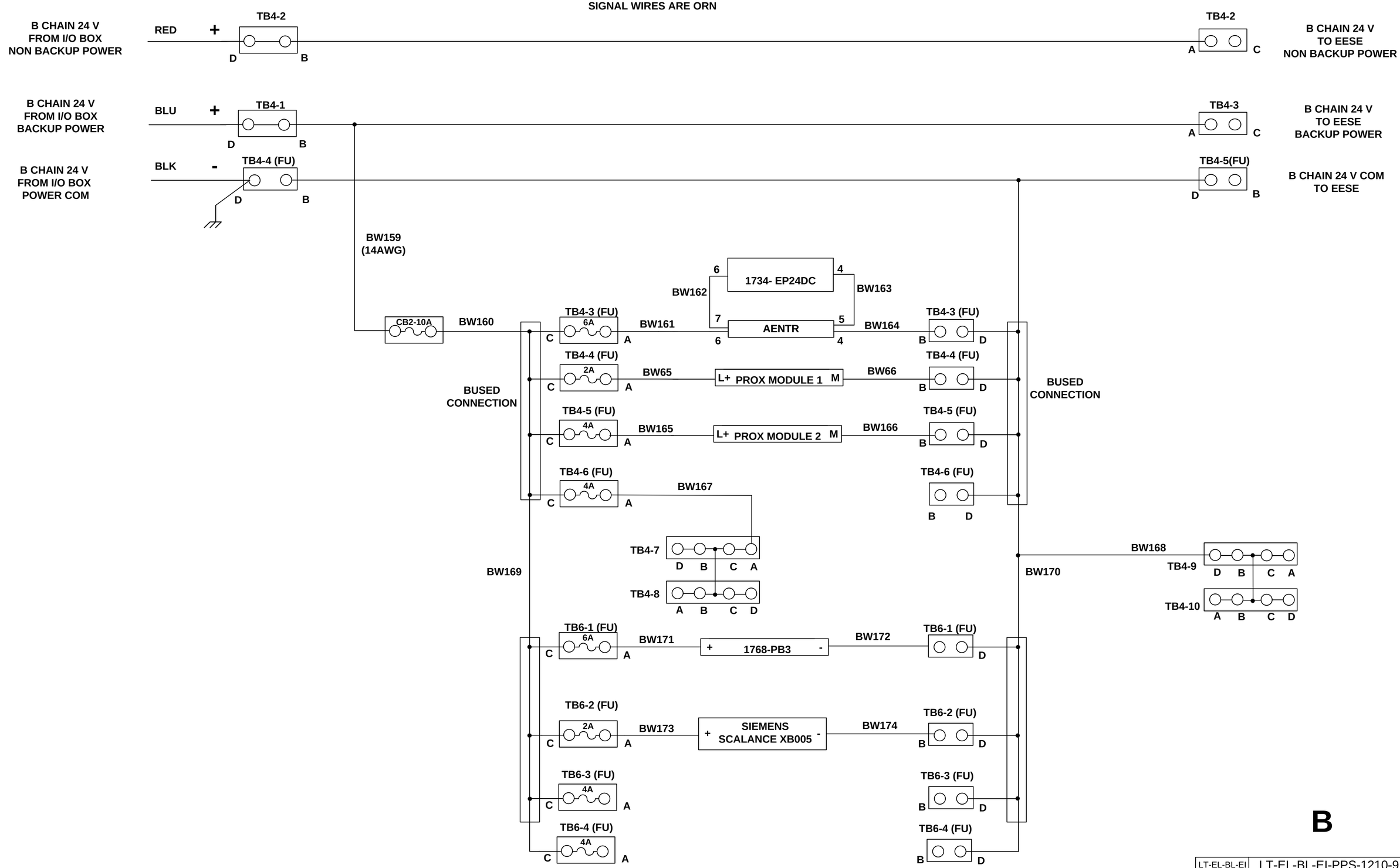

B

LT-EL-BL-EI (DRAWING DIRECTORY)	LT-EL-BL-EI-PPS-1210-91 (DRAWING NUMBER)	A (REV)
COMPUTER REPRODUCIBLE	SCALE: N/A	SHEET 33 OF 38

LT-EL-BL-EI-PPS-1210-91

REV	DESCRIPTION	DATE	BY	CHECKED	APP
	SEE SHEET 1				

21-ID NETWORK LAYOUT

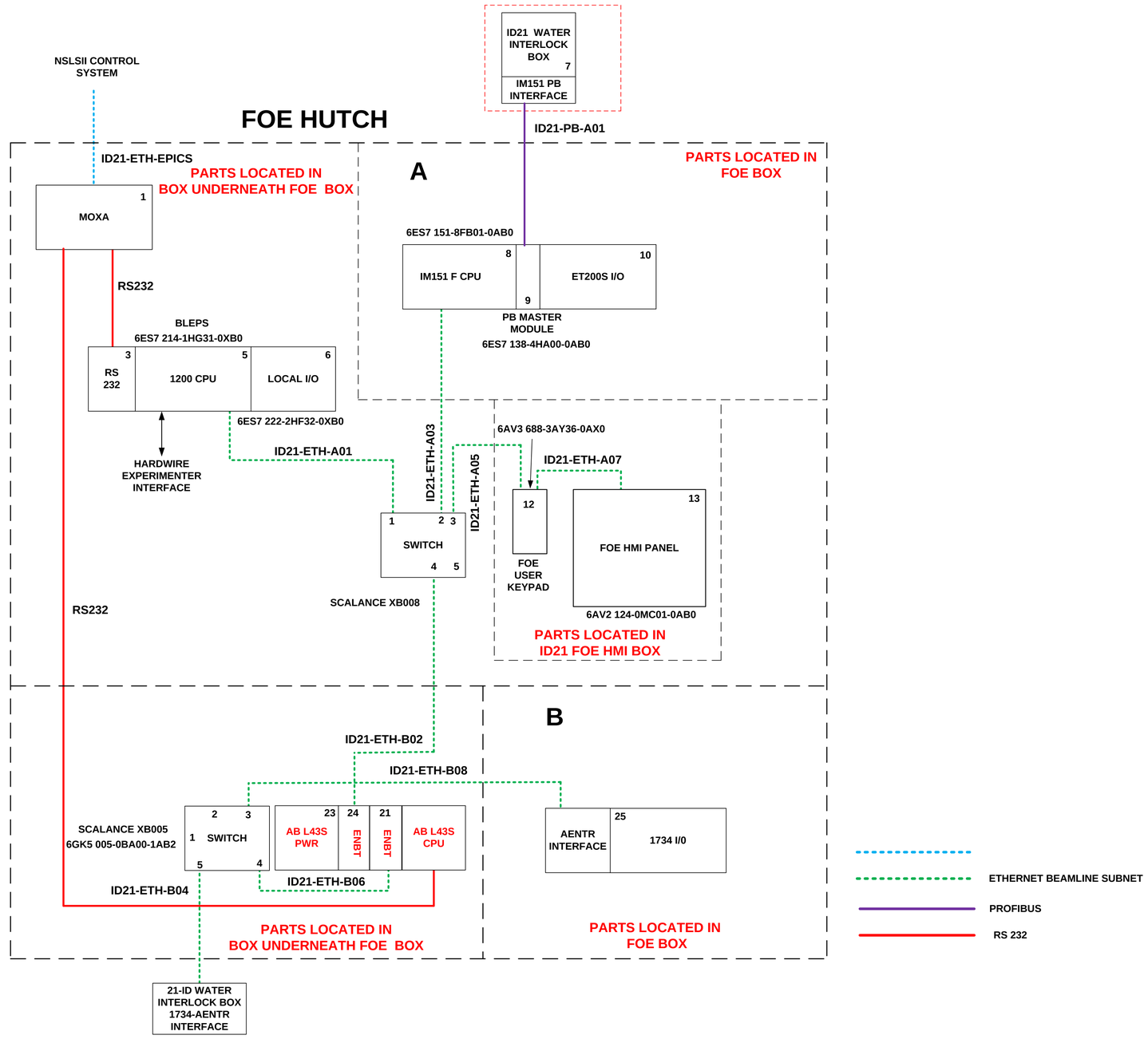

NOTES:
(1) FOE WATER INTERLOCK IO IS NOT IN ALL BEAMLINE PPS. IF PPS DOES NOT HAS WATER INTERLOCK IO, B CHAIN ETHERNET CABLE NUMBER WILL BE SEQUENTIALLY NAMED AFTER ID21-ETH-004.
(2) BEAM LINE ID21, ID?? HAVE WATER INTERLOCK IO.

LT-EL-BL-EI DRAWING DIRECTORY	LT-EL-BL-EI-PPS-1210-91 DRAWING NUMBER	A REV
COMPUTER REPRODUCIBLE	SCALE: N/A	SHEET 34 OF 38

LT-EL-BL-EI-PPS-1210-91

REV	DESCRIPTION	DATE	BY	CHECKED	APP
	SEE SHEET 1				

A CHAIN

Row 1

UDK4 End Cover 2775113

TB-3

CB-1

End Cap For Fuses: EPDDFL4U

1x Ground 3044092

CIRCUIT BREAKER 10A

4x Fuse Holders DDFL4U

2X UDK4 2775016

3X UDK4 2775016

1x Ground 3044092

4X UDK4 2775016

1x Ground 3044092

UDK4 End Cover 2775113

Siemens IM-151 6ES7-151-8FBOI-0AB0

Profibus 6ES7 138-4HA00-0AB0

Siemens PME 6ES7-193-4CC20-0AA0

3x Dual Slots Siemens 6ES7-193-4CF40-0AA0

Siemens Single Slot 6ES7-193-4CA40-0AA0

Siemens PME 6ES7-193-4CC20-0AA0

4x Single Slot Siemens 6ES7-193-4CA40-0AA0

3x Dual Slots Siemens 6ES7-193-4CF40-0AA0

K22 PLC-RSC- 24DC/21AU PHOENIX 2966265

K25 PLC-RSC- 24DC/21AU PHOENIX 2966265

K29 PLC-RSC- 24DC/21AU PHOENIX 2966265

Row 2

TB-1

4x Ground 3044092

81x Terminal Block UTTB 2,5: 3044636

3x Ground 3044092

End Cap For: D-UTTB 2,5/4 3047293

K1 ABB Relay Socket CR-PSS

K3 ABB Relay Socket CR-PSS

K5 ABB Relay Socket CR-PSS

K13 ABB Relay Socket CR-PSS

K15 IDEC Relay Socket SF1V-4-07L

K17 IDEC Relay Socket SF1V-4-07L

K7 Altech Relay OA5601

K9 Altech Relay OA5601

K11 Altech Relay OA5601

B CHAIN

Row 3

UDK4 End Cover 2775113

TB-4

CB-1

End Cap For Fuses: EPDDFL4U

1x Ground 3044092

CIRCUIT BREAKER 10A

4x Fuse Holders DDFL4U

2X UDK4 2775016

3X UDK4 2775016

1x Ground 3044092

4X UDK4 2775016

1x Ground 3044092

UDK4 End Cover 2775113

Allen Bradley 1734 AENTR Ethernet Interface

8x Single Slots Allen Bradley 1734-Top3

Single Slot Allen Bradley 1734-Top3

Power Module 1734 EP24DC

10x Single Slots Allen Bradley 1734-Top3

2x Ground 3044092

AUX DEVICE A CHAIN: Klaschka D-75242

AUX DEVICE B CHAIN: Klaschka D-75242

TB-5

Diode TB End Cover 3047293

4X TB Konnect It 3 Circuit KN-TL-14

UDK4 2775016

4X Diode TB CDL4U(E)DD2

Ground 3044092

ABB Relay Socket CR-PSS

ABB Relay Socket CR-PSS

ABB Relay Socket CR-PSS

Ground 3044092

K19 ABB Relay Socket CR-PSS

K21 ABB Relay Socket CR-PSS

K23 ABB Relay Socket CR-PSS

Konnect It End Cover KN-EC-TL

UDK4 End Cover 2775113

Row 4

TB-2

4x Ground 3044092

68x Terminal Block UTTB 2,5: 3044636

3x Ground 3044092

End Cap For: D-UTTB 2,5/4 3047293

K2 Relay Socket ES 50

K4 Relay Socket ES 50

K12 Relay Socket ES 50

K14 Relay Socket ES 50

K16 Elesta Relay Socket SRD-SIM4 H300725

K18 Relay Socket ES 50

K20 Elesta Relay Socket SRD-SIM4 H300725

K6 Phoenix PSR-SCF 24UC Safety Relay Socket 2981444

K8 Phoenix PSR-SCF 24UC Safety Relay Socket 2981444

K10 Phoenix PSR-SCF 24UC Safety Relay Socket 2981444

LT-EL-BL-EI-PPS-1210-91

LT-EL-BL-EI (DRAWING DIRECTORY)	LT-EL-BL-EI-PPS-1210-91 (DRAWING NUMBER)	A (REV)
COMPUTER REPRODUCIBLE	SCALE: N/A	SHEET 35 OF 38

REV	DESCRIPTION	DATE	BY	CHECKED	APP
	SEE SHEET 1				

Row 1

TB 7

End Cap For Fuses: EPDDFL4U

- End Clamp EIUK 1
- 4x Fuse Holders DDFL4U
- 3x Terminal Block UT 2 5/4-Quattro 3044542
- 1x Ground 3044092
- 4x Terminal Block UT 2 5/4-Quattro 3044542
- 3x Ground 3044092

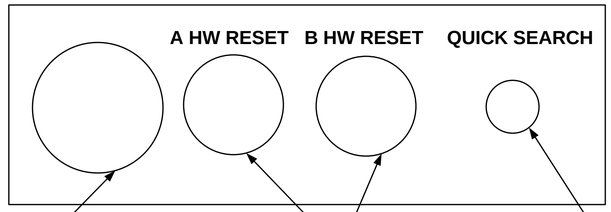

Amphenol Connector 97-4102A-20-27P

Push Button GCX1114
Front Fixing Adapter M22-IVS
Contact Block ECX1040-5

NKK SWITCHES S7F

TB 6

End Cap For Fuses: EPDDFL4U

- End Clamp EIUK 1
- 4x Fuse Holders DDFL4U
- 3x Ground 3044092

Row 2

- Siemens Scalance XB008
- Siemens CM 1241-RS232
- Siemens Simatic S7-1200-CPU-1214c
- Siemens SM 1222 RLY
- Siemens SM 1223 DC/RLY
- MOXA Nport IA5-250A

Row 3

- Siemens Scalance XB005
- Allen Bradley Power Supply 1768-PB3 A
- Allen Bradley Ethernet/IP Communication Interface 1768 ENBT/A
- Allen Bradley Ethernet/IP Communication Interface 1768 ENBT/A
- Allen Bradley Compact Guard Logix 1768-L43S/B
- Allen Bradley End Cap 1769-ECR

NEW FOE LOWER BOX PANEL

LT-EL-BL-EI-PPS-1210-91

LT-EL-BL-EI (DRAWING DIRECTORY)	LT-EL-BL-EI-PPS-1210-91 (DRAWING NUMBER)	A (REV)
COMPUTER REPRODUCIBLE	SCALE: N/A	SHEET 36 OF 38

REV	DESCRIPTION	DATE	BY	CHECKED	APP
	SEE SHEET 1				

ROW 1:

	[20]				
	[2]				
CB 1	WMZS1B10	N/A	Circuit Breaker B10	Eaton	
TB 3	[19]	x2 [13]	[6]	x6 [8]	
	[19]	x3 [13]	[2]	[19]	x4 [13] [2]

SLOT	MODULE	SOCKET	DESCRIPTION	VENDOR
	6ES7-151-8FB00-0AB0	N/A	M-151-8F ETHERNET INTERFAC	SIEMENS
	6ES7-138-4HA00-0AB0	N/A	DP MASTER	SIEMENS
1	6ES7-138-4CA50-0AB0	6ES7-193-4CC20-0AA0	POWER MODULE PM-E	SIEMENS
2	6ES7-138-4FA04-0AB0	6ES7-193-4CF40-0AA0	4/8FDI SAFETY INPUT	SIEMENS
3	6ES7-138-4FA04-0AB0	6ES7-193-4CF40-0AA0	4/8FDI SAFETY INPUT	SIEMENS
4	6ES7-138-4FA04-0AB0	6ES7-193-4CF40-0AA0	4/8FDI SAFETY INPUT	SIEMENS
5	6ES7-131-4BF00-0AB0	6ES7-193-4CA40-0AA0	8DI STANDARD IN	SIEMENS
6	6ES7-138-4CA50-0AB0	6ES7-193-4CC20-0AA0	POWER MODULE PM-E	SIEMENS
7	6ES7-132-4BF00-0AA0	6ES7-193-4CA40-0AA0	8DO STANDARD OUT	SIEMENS
8	6ES7-131-4BF00-0AB0	6ES7-193-4CA40-0AA0	8DI STANDARD IN	SIEMENS
9	6ES7-131-4BF00-0AB0	6ES7-193-4CA40-0AA0	8DI STANDARD IN	SIEMENS
10	6ES7-132-4BF00-0AA0	6ES7-193-4CA40-0AA0	8DO STANDARD OUT	SIEMENS
11	6ES7-138-4FB03-0AB0	6ES7-193-4CF40-0AA0	4FDO SAFETY OUTPUT	SIEMENS
12	6ES7-138-4FB03-0AB0	6ES7-193-4CF40-0AA0	4FDO SAFETY OUTPUT	SIEMENS
13	6ES7-138-4FB03-0AB0	6ES7-193-4CF40-0AA0	4FDO SAFETY OUTPUT	SIEMENS
14	6ES7-193-4JA00-0AA0	N/A	SOCKET COVER	SIEMENS
K22	PLC-RSC-24DC/21AU		RELAY	PHOENIX
K25	PLC-RSC-24DC/21AU		RELAY	PHOENIX
K29	PLC-RSC-24DC/21AU		RELAY	PHOENIX

ROW 2:

TB 1	[2]	[2]	[20]	x81 [1]	[2] [2]

RELAY	MODULE	SOCKET	DESCRIPTION	VENDOR
K1	OW5669.12/983/61	RT 78626	RELAY	SHRACK
K3	OW5669.12/983/61	RT 78626	RELAY	SHRACK
K5	OW5669.12/983/61	RT 78626	RELAY	SHRACK
K13	OW5669.12/983/61	RT 78626	RELAY	SHRACK
K15	RF1V-3A1BL-D24	SF1V-4-07L	RELAY	IDEC
K17	RF1V-3A1BL-D24	SF1V-4-07L	RELAY	IDEC
K7	OA5601	N/A	ALTECH RELAY	BNL
K9	OA5601	N/A	ALTECH RELAY	BNL
K11	OA5601	N/A	ALTECH RELAY	BNL

ROW 3:

	[20]				
	[2]				
CB 2	WMZS1B10	N/A	Circuit Breaker B10	Eaton	
TB 4	[19]	x2 [13]	[6]	x4 [8]	
	[19]	x3 [13]	[2]	[19]	x3 [13] [2]

SLOT	MODULE	SOCKET	DESCRIPTION	VENDOR
	1734-AENTR	N/A	24V DC EHTERNET ADAPTER	AB
1	1734-IB8S	1734-TOP3 (2)	8 INPUT SAFETY	AB
2	1734-IB8S	1734-TOP3 (2)	8 INPUT SAFETY	AB
3	1734-IB8S	1734-TOP3 (2)	8 INPUT SAFETY	AB
4	1734-IB8S	1734-TOP3 (2)	8 INPUT SAFETY	AB
5	1734-IB8	1734-TOP3	STANDARD 8 INPUT MODULE	AB
6	1734-EP24DC	N/A	POWER MODULE PM-E	AB
	1734-OB8E	1734-TOP3	8 CURRENT SOURCE	AB
7	1734-IB8	1734-TOP3	STANDARD 8 INPUT MODULE	AB
8	1734-IB8S	1734-TOP3 (2)	8 INPUT SAFETY	AB
9	1734-OW4	1734-TOP3	4 FORM RELAY MODULE	AB
10	1734-OW4	1734-TOP3	4 FORM RELAY MODULE	AB
11	1734-OB8S	1734-TOP3 (2)	8 OUTPUT SAFETY	AB
12	1734-OB8S	1734-TOP3 (2)	8 OUTPUT SAFETY	AB
	[2]	[2]		
AMPLIFIER	ZSS2/b00ca-1.68	N/A	SENSOR SWITCH AMPLIFIER	KLASCHKA
AMPLIFIER	ZSS2/b00ca-1.68	N/A	SENSOR SWITCH AMPLIFIER	KLASCHKA

TB 5	[15]	x3 [14]	[19]	[13]	x4 [16] [17]

RELAY	MODULE	SOCKET	DESCRIPTION	VENDOR
K19	OW5669.12/983/61	RT 78626	RELAY	SHRACK
K21	OW5669.12/983/61	RT 78626	RELAY	SHRACK
K23	OW5669.12/983/61	RT 78626	RELAY	SHRACK
	[2]	[2]		
	[20]			

ROW 4:

	[20]				
	[2]	[2]	[2]	[2]	
TB 2	[3]	x70 [1]			
	[2]	[2]	[2]		

RELAY	MODULE	SOCKET	DESCRIPTION	VENDOR
K2	SGR282Z	RT 78626	RELAY	SHRACK
K4	SGR282Z	RT 78626	RELAY	SHRACK
K12	SGR282Z	RT 78626	RELAY	SHRACK
K18	SGR282Z	RT 78626	RELAY	SHRACK
K14	SIM222 24VDC	SRD-SIM4	24V RELAY	ELESTA
K16	SIM222 24VDC	SRD-SIM4	24V RELAY	ELESTA
K6	2981444		PSR-SCF 24UC SAFETY RELAY	PHOENIX
K8	2981444		PSR-SCF 24UC SAFETY RELAY	PHOENIX
K10	2981444		PSR-SCF 24UC SAFETY RELAY	PHOENIX

LT-EL-BL-EI-PPS-1210-91

LT-EL-BL-EI (DRAWING DIRECTORY)	LT-EL-BL-EI-PPS-1210-91 (DRAWING NUMBER)	A (REV)
COMPUTER REPRODUCIBLE	SCALE: N/A	SHEET 37 OF 38

REV	DESCRIPTION	DATE	BY	CHECKED	APP
	SEE SHEET 1				

21ID FOE Cable list

CABLE Num.	CHAIN	From LOCATION	To LOCATION	CONDUCTORS Needed
ID21FOE-1-A	A	FOE	CS1&Emergency stop	8
ID21FOE-1-B	B	FOE	CS1&Emergency stop	8
ID21FOE-2-A	A	FOE	CS2&Emergency stop	8
ID21FOE-2-B	B	FOE	CS2&Emergency stop	8
ID21FOE-3-A	A	FOE	Emergency Entrance E-Stop	4
ID21FOE-3-B	B	FOE	Emergency Entrance E-Stop	6
ID21FOE-4-A	A	FOE	FRONT Left&Right Mag Lock Switch	4
ID21FOE-4-B	B	FOE	FRONT Left&Right REED Switch	4
ID21FOE-5-A	A	FOE	FRONT Left&Right Door Switches	8
ID21FOE-5-B	B	FOE	FRONT Left&Right Door Switches	8
ID21FOE-6-A	A	FOE	Beam line Vacuum Switch 1A	2
ID21FOE-6-B	B	FOE	Beam line Vacuum Switch 1B	2
ID21FOE-7-A	A	FOE	Beam line Vacuum Switch 2A	2
ID21FOE-7-B	B	FOE	Beam line Vacuum Switch 2B	2
ID21FOE-8-A	A	FOE	Beam line Vacuum Switch 3A	2
ID21FOE-8-B	B	FOE	Beam line Vacuum Switch 3B	2
ID21FOE-9-A	A	FOE	Beam line Vacuum Switch 4A	2
ID21FOE-9-B	B	FOE	Beam line Vacuum Switch 4B	2
ID21FOE-10-A	A	FOE	Water Box Power A	2
ID21FOE-10-B	B	FOE	Water Box Power B	2
ID21FOE-11-A	A	FOE	FOE Photon shutter A Proximity sensor, OPEN and Closed Switches	6
ID21FOE-11-B	B	FOE	FOE Photon shutter B Proximity sensor, OPEN and Closed Switches	6
ID21FOE-12-A	A	FOE	Photon shutter A line 1 S1 Proximity sensor, OPEN and Closed Switches	6
ID21FOE-12-B	B	FOE	Photon shutter B line 1 S1 Proximity sensor, OPEN and Closed Switches	6
ID21FOE-13-A	A	FOE	CS-E	4
ID21FOE-13-B	B	FOE	CS-E	2
ID21FOE-14-A	A	FOE	Search Sounder	2
ID21FOE-14-B	B	FOE	SPARE	
ID21FOE-15-A	A	FOE	SPARE	
ID21FOE-15-B	B	FOE	SPARE	
ID21FOE-16-A	A	FOE	OverHead Lights	2
ID21FOE-16-B	B	FOE	SPARE	
ID21FOE-17-A	A	FOE	Down Stream A Chain Interlock, Entry Permit, Beam lights	6
ID21FOE-17-B	B	FOE	Down Stream B Chain Interlock, Entry Permit, Beam lights	6
ID21FOE-18-A	A	FOE	Floor Beam ON Sign	2
ID21FOE-18-B	B	FOE	Floor Beam ON Sign	2
ID21FOE-19-A	A	FOE	Beam Imminent Beacon	2
ID21FOE-19-B	B	FOE	SPARE	
ID21FOE-20-A	A	FOE	SPARE	
ID21FOE-20-B	B	FOE	SPARE	
ID21FOE-21-A	A	FOE	Down Stream LEFT&Right Door MagLOCK Coil	4
ID21FOE-21-B	B	FOE	SPARE	
ID21FOE-22-A	A	FOE	SPARE	
ID21FOE-22-B	B	FOE	SPARE	
ID21FOE-23-A	A	FOE	FOE Beam line Photon shutter solenoid	2
ID21FOE-23-B	B	FOE	FOE Beam line Photon shutter solenoid	2
ID21FOE-24-A	A	FOE	Beam line Photon shutter A line 1 S1 solenoid	2
ID21FOE-24-B	B	FOE	Beam line Photon shutter B line 1 S1 solenoid	2
ID21FOE-25-A	A	FOE	Door Opener Inhibiting Relay	4
ID21FOE-25-B	B	FOE	SPARE	
SPARE				
SPARE				
ID21FOE-40-A	A	FOE	Storage Ring PPS IO BOX	
ID21FOE-40-B	B	FOE	Storage Ring PPS IO BOX	
SPARE				
ID21EPS-1		EPS	FOE Photon shutter A Closed switches for EPS	4
ID21EPS-2		EPS	FOE Photon shutter B Closed switches for EPS	4
ID21EPS-3		EPS	Photon shutter A line 1 S1 Closed switches for EPS	4
ID21EPS-4		EPS	Photon shutter B line 1 S1 Closed switches for EPS	4
ID21EPS-5		EPS	Photon shutter A line 2 S2 Closed switches for EPS	4
ID21EPS-6		EPS	Photon shutter B line 2 S2 Closed switches for EPS	4
ID21FOE-26-A	A	FOE	Beam line Vacuum Switch 5A	2
ID21FOE-26-B	B	FOE	Beam line Vacuum Switch 5B	2
ID21FOE-27-A	A	FOE	Photon shutter A line 2 S2 Proximity sensor, OPEN and Closed Switches	6
ID21FOE-27-B	B	FOE	Photon shutter B line 2 S2 Proximity sensor, OPEN and Closed Switches	6
ID21FOE-28-A	A	FOE	Beam line Photon shutter A line 2 S2 solenoid	2
ID21FOE-28-B	B	FOE	Beam line Photon shutter B line 2 S2 solenoid	2

REV	DESCRIPTION	DATE	BY	CHECKED	APP
A	INITIAL RELEASE	6/07/2016	SEJ	JM	AC

WATER FLOW INTERLOCK CHANNEL 1 A CHAIN

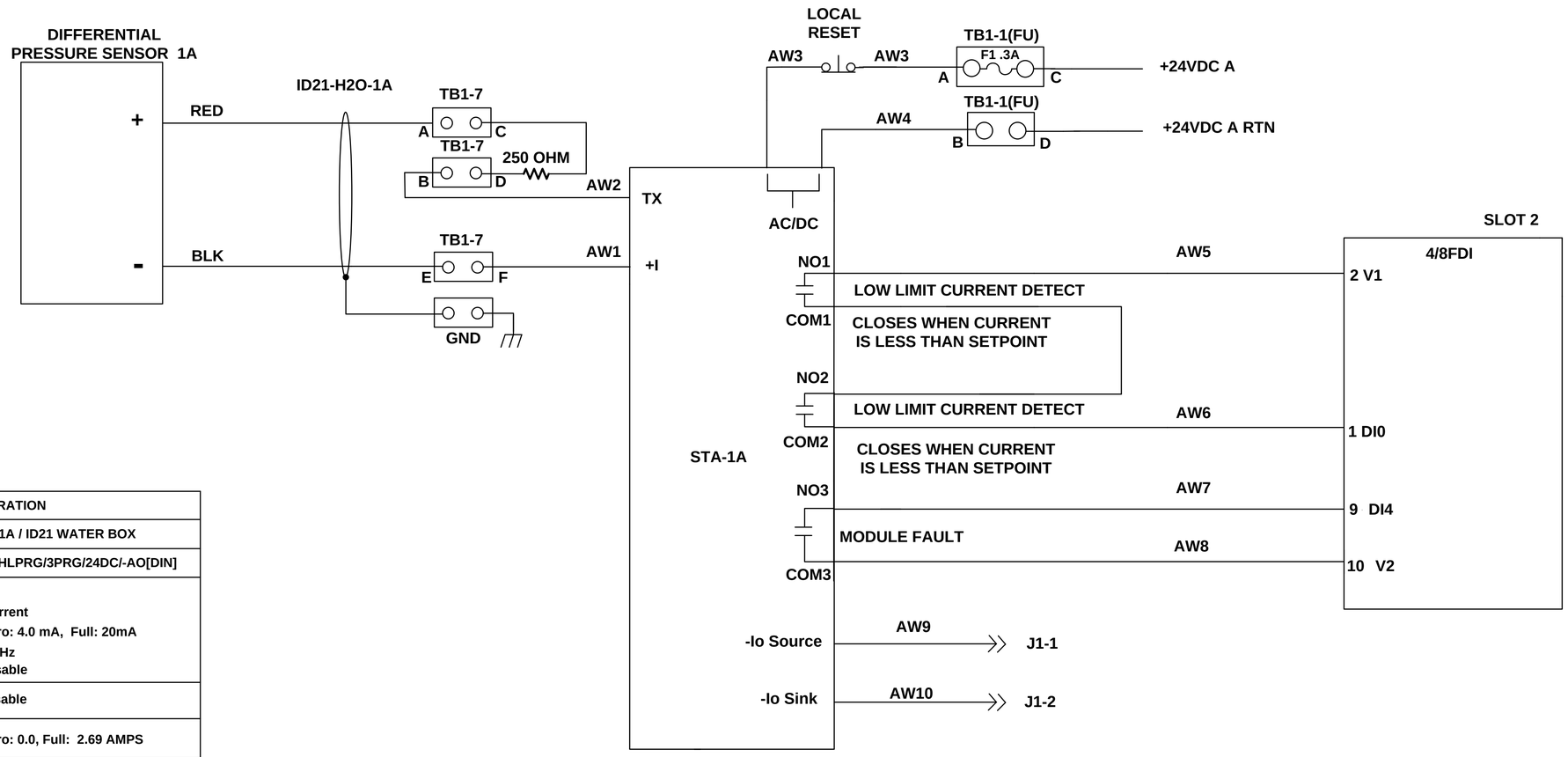

STA DEVICE PARAMETER CONFIGURATION		
DEVICE NAME / LOCATION:	STA-1A / ID21 WATER BOX	
MODEL :	STA/HLPRG/3PRG/24DC/-AO[DIN]	
INPUT		
Measurement Type:	Current	
Input Range:	Zero: 4.0 mA, Full: 20mA	
Filter Settings:	60 Hz	
Broken wire:	Disable	
TRIMMING	Disable	
SCALING	Zero: 0.0, Full: 2.69 AMPS	
DISPLAY		
Display Source:	Process Variable (PV)	
Precision:	Auto	
ALARMS	ALARM 1	ALARM 2
Mode:	Low Trip	Hi Trip
Latching:	Off	Off
Trip point:	1.2 GPM	0.0 GPM
Dead Band:	0.0 GPM	0.0 GPM
Delay:	0 s	0 s
ANALOG OUTPUT		
Mode:	Current	
Fail mode:	Fail Low	
AO Range:	Zero: 4.0, Full: 20.0 mA	
Damping:	Disable (0.0 s)	

A

BROOKHAVEN NATIONAL LABORATORY

UNLESS OTHERWISE SPECIFIED
INTEGER TOLERANCES ± .06
DECIMAL TOLERANCES
.X ± .030
.XX ± .015
.XXX ± .010
ANGULAR TOLERANCE ± 0.5°
UNSPECIFIED RADII .02 MAX
125 BREAK SHARP CORNERS AND EDGES
FINISH MAX .03 MIN .005

BROOKHAVEN NATIONAL LABORATORY
BROOKHAVEN SCIENCE ASSOCIATES
UPTON, NEW YORK 11973
Exploring Life's Mysteries, Protecting its Future

UNLESS OTHERWISE SPECIFIED DIMENSIONS ARE IN INCHES
DIMENSIONS IN [**] ARE MILLIMETERS EQUIV. FOR REF. ONLY

ESH&Q RISK LEVEL A-2

INTERPRET DRAWING AS PER ANSI Y14.5 OR Y32.2

		DATE	OUTSTANDING ECN'S
DRWN BY	S. JARZABKOWSKI	6/07/2016	
CHK BY	J. MALLEY	6/09/2016	
ENG APP	S. BUDA	6/08/2016	
SUPV APP	G. GANETIS	6/10/2016	
QA APP	E. CHESWICK	6/09/2016	
ESH APP	R. LEE	6/09/2016	

NSLS II NATIONAL SYNCHROTRON LIGHT SOURCE II

WIRING DIAGRAM,
ID21 – H20 (ESM-H2O)
A CHAIN AND B CHAIN

LT-EL-BL-EI	LT-EL-BL-EI-PPS-1210-92	A
DRAWING DIRECTORY	DRAWING NUMBER	REV

COMPUTER REPRODUCIBLE | SCALE: N/A | SHEET 1 OF 14

JOB NUMBER | USED ON DWG. NO.

LT-EL-BL-EI-PPS-1210-92

REV	DESCRIPTION	DATE	BY	CHECKED	APP
	SEE SHEET 1				

WATER FLOW INTERLOCK CHANNEL 2 A CHAIN

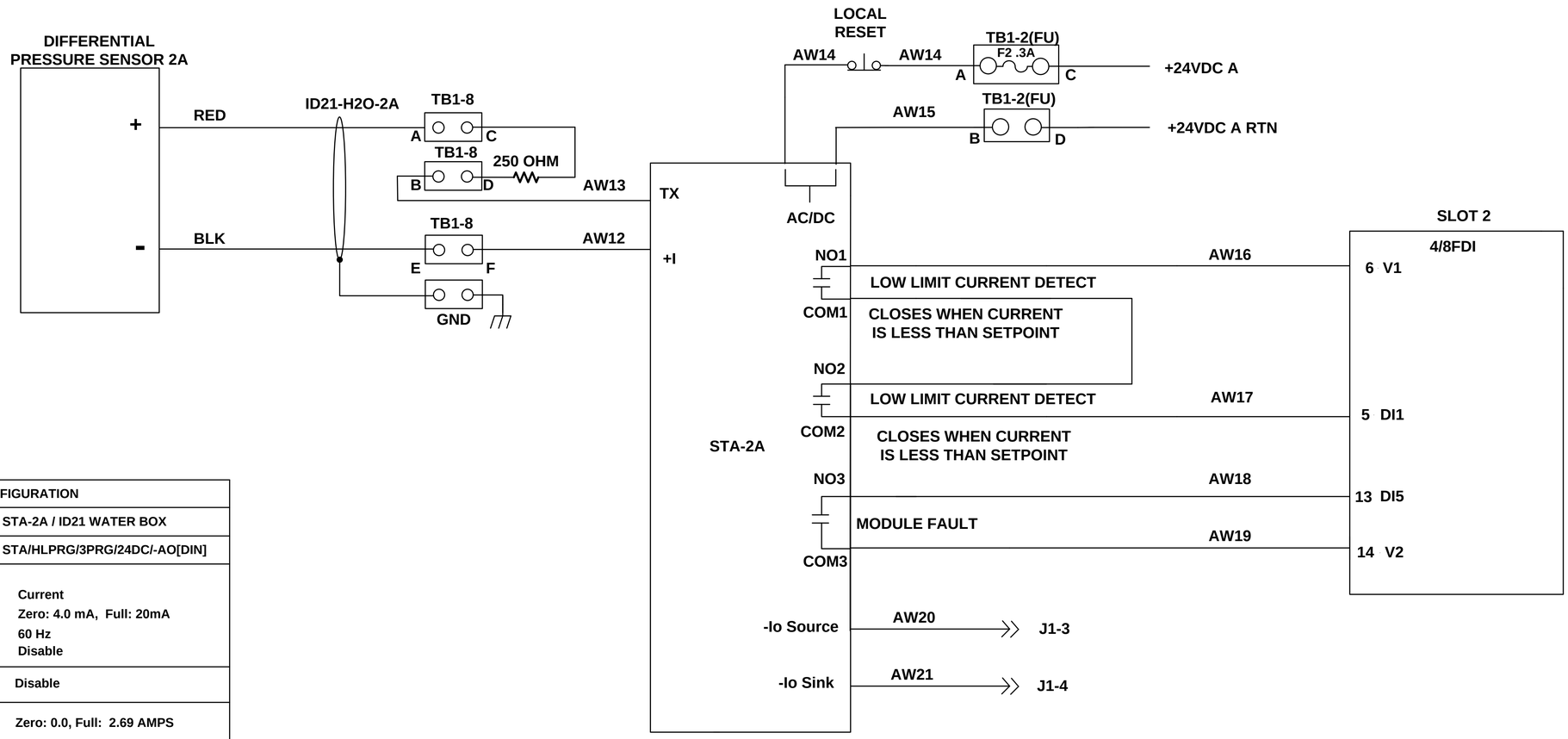

STA DEVICE PARAMETER CONFIGURATION		
DEVICE NAME / LOCATION:	STA-2A / ID21 WATER BOX	
MODEL :	STA/HLPRG/3PRG/24DC/-AO[DIN]	
INPUT		
Measurement Type:	Current	
Input Range:	Zero: 4.0 mA, Full: 20mA	
Filter Settings:	60 Hz	
Broken wire:	Disable	
TRIMMING	Disable	
SCALING	Zero: 0.0, Full: 2.69 AMPS	
DISPLAY		
Display Source:	Process Variable (PV)	
Precision:	Auto	
ALARMS	ALARM 1	ALARM 2
Mode:	Low Trip	Hi Trip
Latching:	Off	Off
Trip point:	0.7 GPM	0.0 GPM
Dead Band:	0.0 GPM	0.0 GPM
Delay:	0 s	0 s
ANALOG OUTPUT		
Mode:	Current	
Fail mode:	Fail Low	
AO Range:	Zero: 4.0, Full: 20.0 mA	
Damping:	Disable (0.0 s)	

A

LT-EL-BL-EI DRAWING DIRECTORY	LT-EL-BL-EI-PPS-1210-92 DRAWING NUMBER	A REV
COMPUTER REPRODUCIBLE	SCALE: N/A	SHEET 2 OF 14

LT-EL-BL-EI-PPS-1210-92

REV	DESCRIPTION	DATE	BY	CHECKED	APP
	SEE SHEET 1				

WATER FLOW INTERLOCK CHANNEL 3 A CHAIN

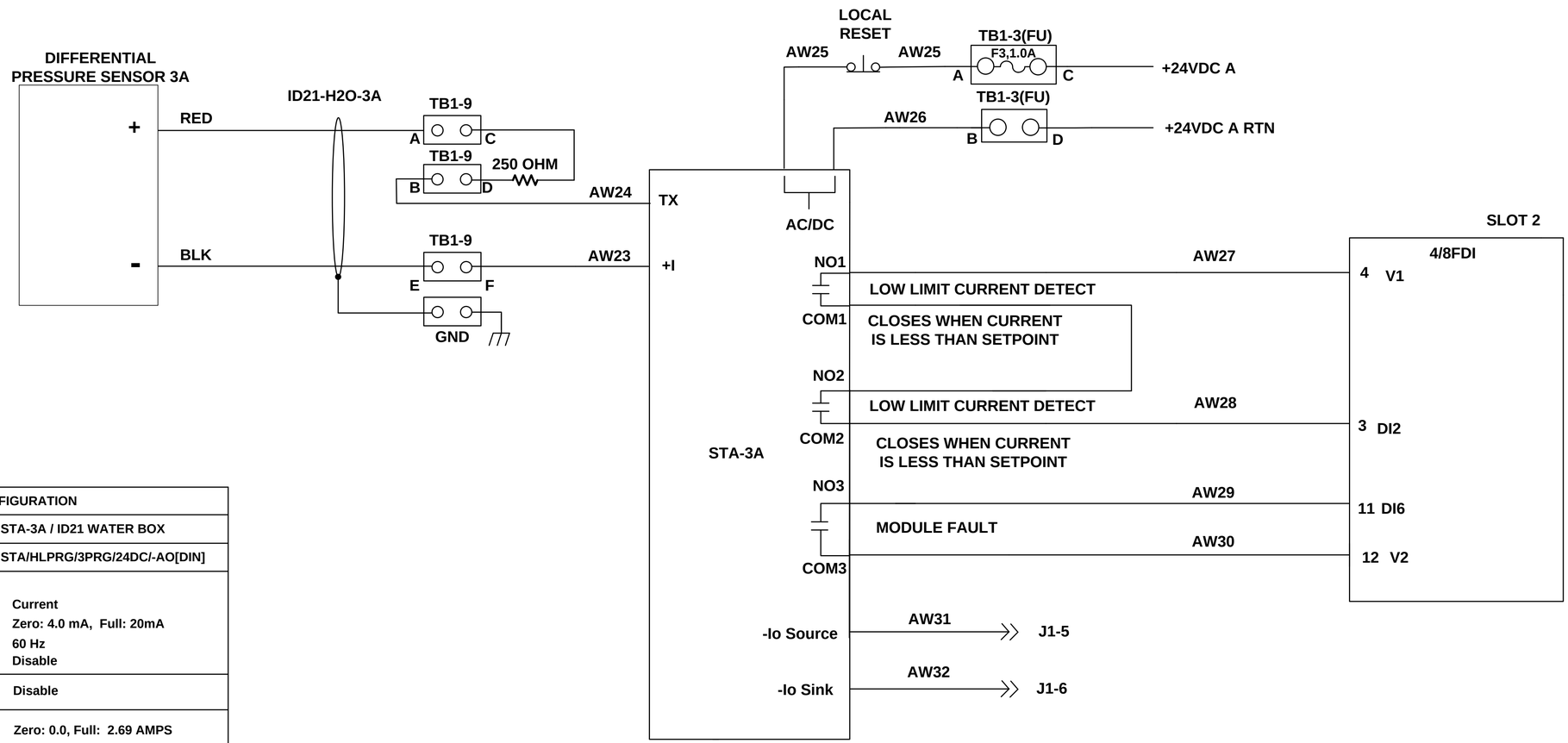

STA DEVICE PARAMETER CONFIGURATION		
DEVICE NAME / LOCATION:	STA-3A / ID21 WATER BOX	
MODEL :	STA/HLPRG/3PRG/24DC/-AO[DIN]	
INPUT		
Measurement Type:	Current	
Input Range:	Zero: 4.0 mA, Full: 20mA	
Filter Settings:	60 Hz	
Broken wire:	Disable	
TRIMMING	Disable	
SCALING	Zero: 0.0, Full: 2.69 AMPS	
DISPLAY		
Display Source:	Process Variable (PV)	
Precision:	Auto	
ALARMS	ALARM 1	ALARM 2
Mode:	Low Trip	Hi Trip
Latching:	Off	Off
Trip point:	1.2 GPM	0.0 GPM
Dead Band:	0.0 GPM	0.0 GPM
Delay:	0 s	0 s
ANALOG OUTPUT		
Mode:	Current	
Fail mode:	Fail Low	
AO Range:	Zero: 4.0, Full: 20.0 mA	
Damping:	Disable (0.0 s)	

A

LT-EL-BL-EI	LT-EL-BL-EI-PPS-1210-92	A
DRAWING DIRECTORY	DRAWING NUMBER	REV

COMPUTER REPRODUCIBLE | SCALE: N/A | SHEET 3 OF 14

LT-EL-BL-EI-PPS-1210-92

REV	DESCRIPTION	DATE	BY	CHECKED	APP
	SEE SHEET 1				

WATER FLOW INTERLOCK CHANNEL 4 A CHAIN

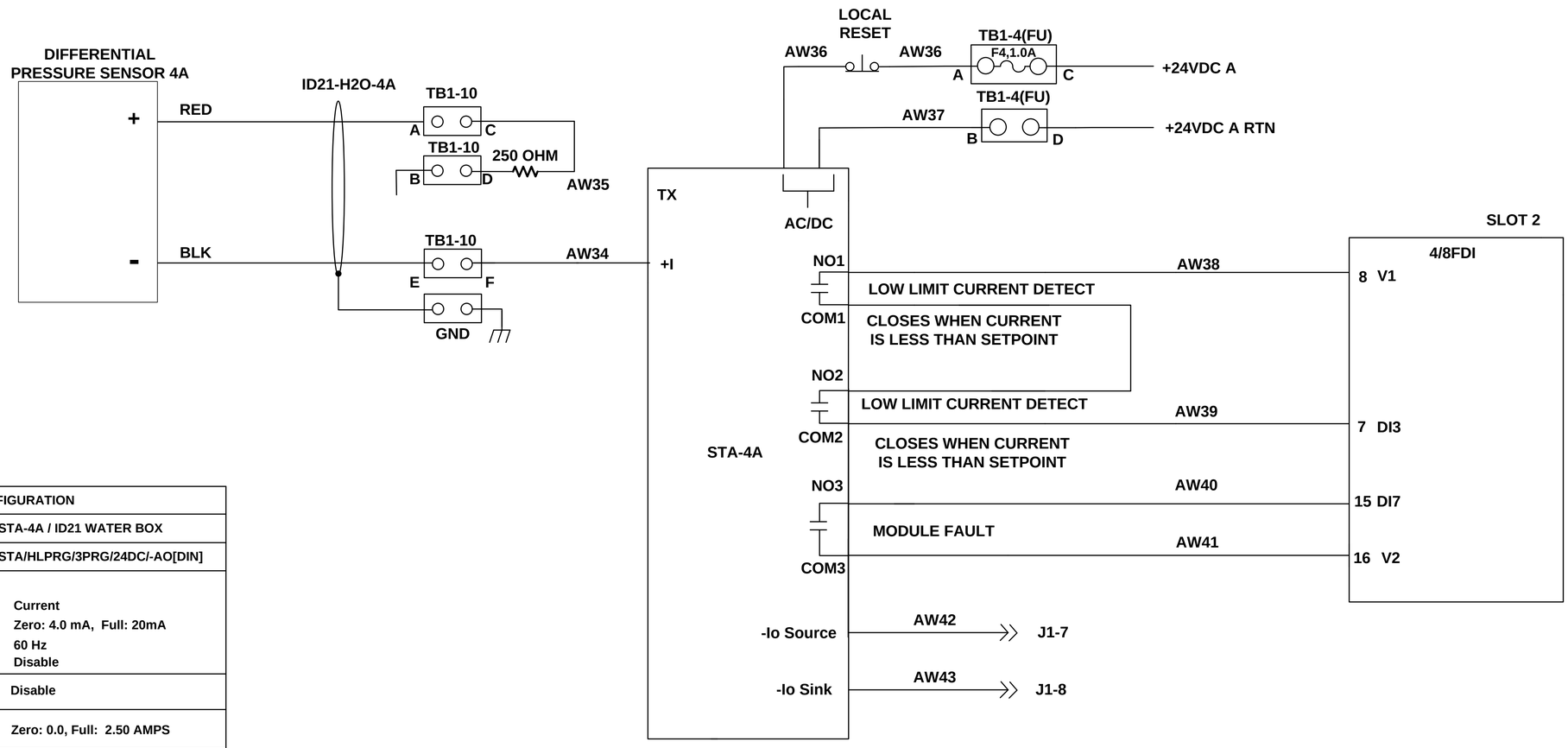

STA DEVICE PARAMETER CONFIGURATION		
DEVICE NAME / LOCATION:	STA-4A / ID21 WATER BOX	
MODEL :	STA/HLPRG/3PRG/24DC/-AO[DIN]	
INPUT		
Measurement Type:	Current	
Input Range:	Zero: 4.0 mA, Full: 20mA	
Filter Settings:	60 Hz	
Broken wire:	Disable	
TRIMMING	Disable	
SCALING	Zero: 0.0, Full: 2.50 AMPS	
DISPLAY		
Display Source:	Process Variable (PV)	
Precision:	Auto	
ALARMS	ALARM 1	ALARM 2
Mode:	Low Trip	Hi Trip
Latching:	Off	Off
Trip point:	0.7 GPM	0.0 GPM
Dead Band:	0.0 GPM	0.0 GPM
Delay:	0 s	0 s
ANALOG OUTPUT		
Mode:	Current	
Fail mode:	Fail Low	
AO Range:	Zero: 4.0, Full: 20.0 mA	
Damping:	Disable (0.0 s)	

A

LT-EL-BL-EI DRAWING DIRECTORY	LT-EL-BL-EI-PPS-1210-92 DRAWING NUMBER	A REV
COMPUTER REPRODUCIBLE	SCALE: N/A	SHEET 4 OF 14

LT-EL-BL-EI-PPS-1210-92

REV	DESCRIPTION	DATE	BY	CHECKED	APP
	SEE SHEET 1				

WATER FLOW INTERLOCK CHANNEL 5 A CHAIN

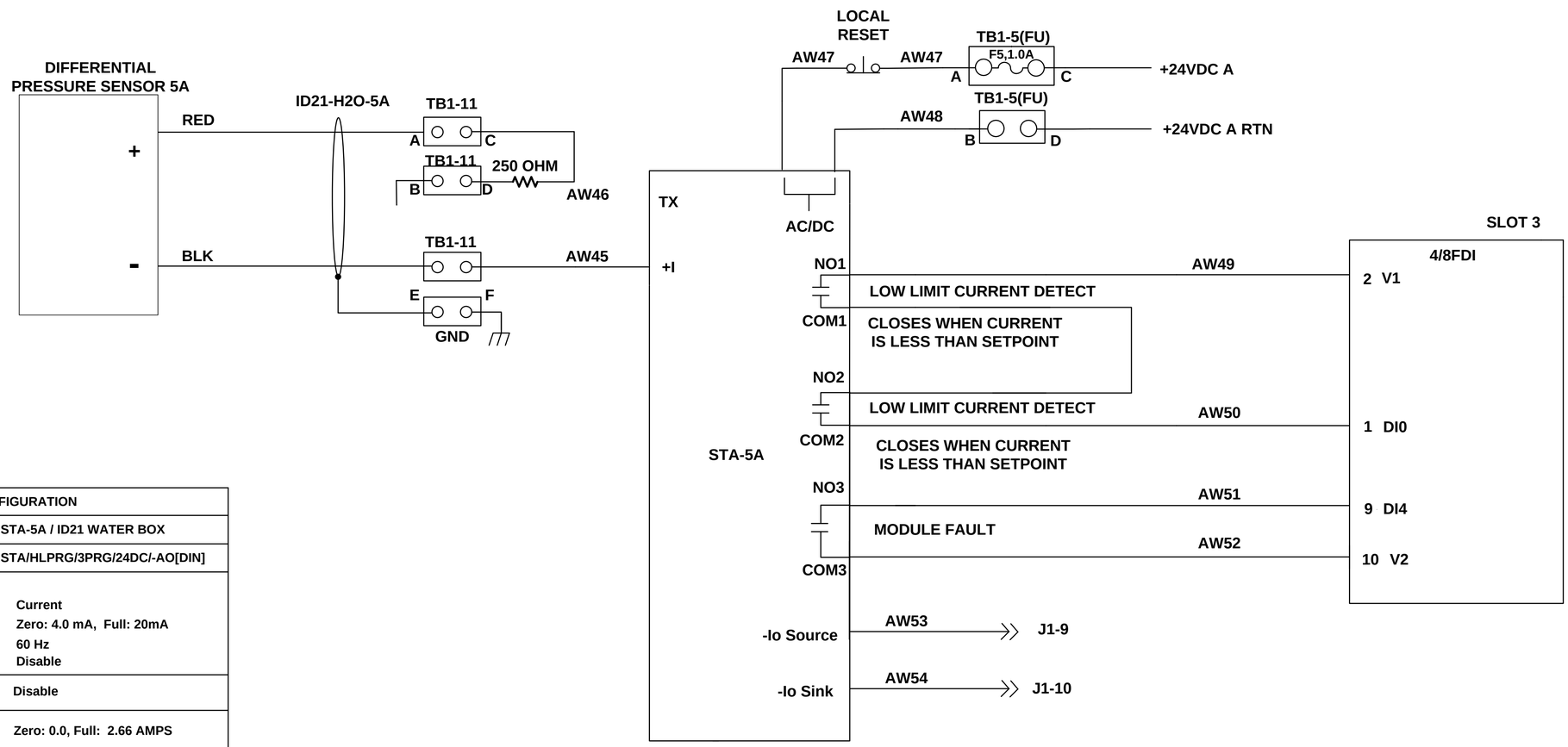

STA DEVICE PARAMETER CONFIGURATION		
DEVICE NAME / LOCATION:	STA-5A / ID21 WATER BOX	
MODEL :	STA/HLPRG/3PRG/24DC/-AO[DIN]	
INPUT		
Measurement Type:	Current	
Input Range:	Zero: 4.0 mA, Full: 20mA	
Filter Settings:	60 Hz	
Broken wire:	Disable	
TRIMMING	Disable	
SCALING	Zero: 0.0, Full: 2.66 AMPS	
DISPLAY		
Display Source:	Process Variable (PV)	
Precision:	Auto	
ALARMS	ALARM 1	ALARM 2
Mode:	Low Trip	Hi Trip
Latching:	Off	Off
Trip point:	0.4 GPM	0.0 GPM
Dead Band:	0.0 GPM	0.0 GPM
Delay:	0 s	0 s
ANALOG OUTPUT		
Mode:	Current	
Fail mode:	Fail Low	
AO Range:	Zero: 4.0, Full: 20.0 mA	
Damping:	Disable (0.0 s)	

A

LT-EL-BL-EI	LT-EL-BL-EI-PPS-1210-92	A
DRAWING DIRECTORY	DRAWING NUMBER	REV

COMPUTER REPRODUCIBLE | SCALE: N/A | SHEET 5 OF 14

LT-EL-BL-EI-PPS-1210-92

REV	DESCRIPTION	DATE	BY	CHECKED	APP
	SEE SHEET 1				

WATER FLOW INTERLOCK CHANNEL 1 B CHAIN

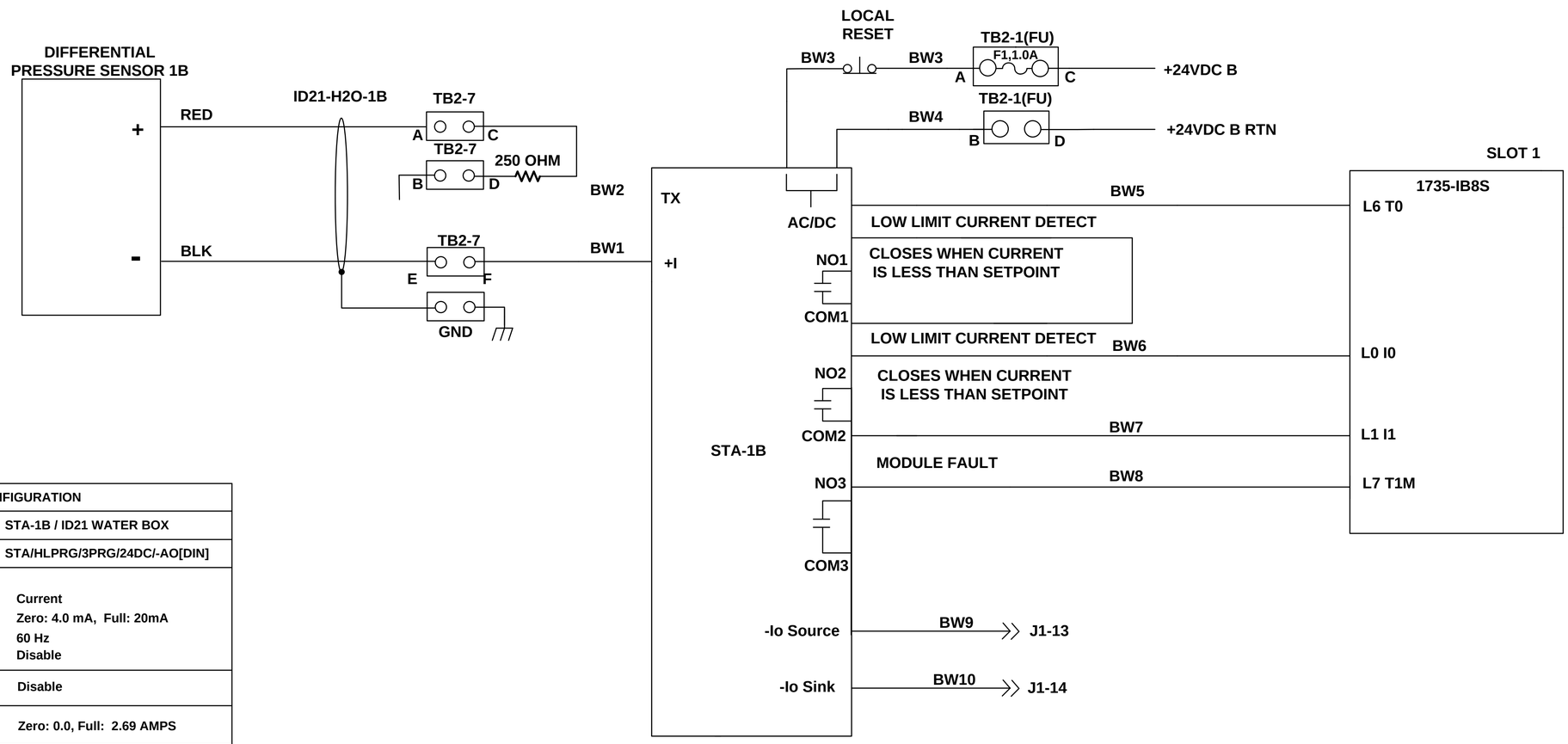

STA DEVICE PARAMETER CONFIGURATION		
DEVICE NAME / LOCATION:	STA-1B / ID21 WATER BOX	
MODEL :	STA/HLPRG/3PRG/24DC/-AO[DIN]	
INPUT		
Measurement Type:	Current	
Input Range:	Zero: 4.0 mA, Full: 20mA	
Filter Settings:	60 Hz	
Broken wire:	Disable	
TRIMMING	Disable	
SCALING	Zero: 0.0, Full: 2.69 AMPS	
DISPLAY		
Display Source:	Process Variable (PV)	
Precision:	Auto	
ALARMS	ALARM 1	ALARM 2
Mode:	Low Trip	Hi Trip
Latching:	Off	Off
Trip point:	1.2 GPM	0.0 GPM
Dead Band:	0.0 GPM	0.0 GPM
Delay:	0 s	0 s
ANALOG OUTPUT		
Mode:	Current	
Fail mode:	Fail Low	
AO Range:	Zero: 4.0, Full: 20.0 mA	
Damping:	Disable (0.0 s)	

B

LT-EL-BL-EI-PPS-1210-92

LT-EL-BL-EI (DRAWING DIRECTORY)	LT-EL-BL-EI-PPS-1210-92 (DRAWING NUMBER)	A (REV)
COMPUTER REPRODUCIBLE	SCALE: N/A	SHEET 6 OF 14

REV	DESCRIPTION	DATE	BY	CHECKED	APP
	SEE SHEET 1				

WATER FLOW INTERLOCK CHANNEL 2 B CHAIN

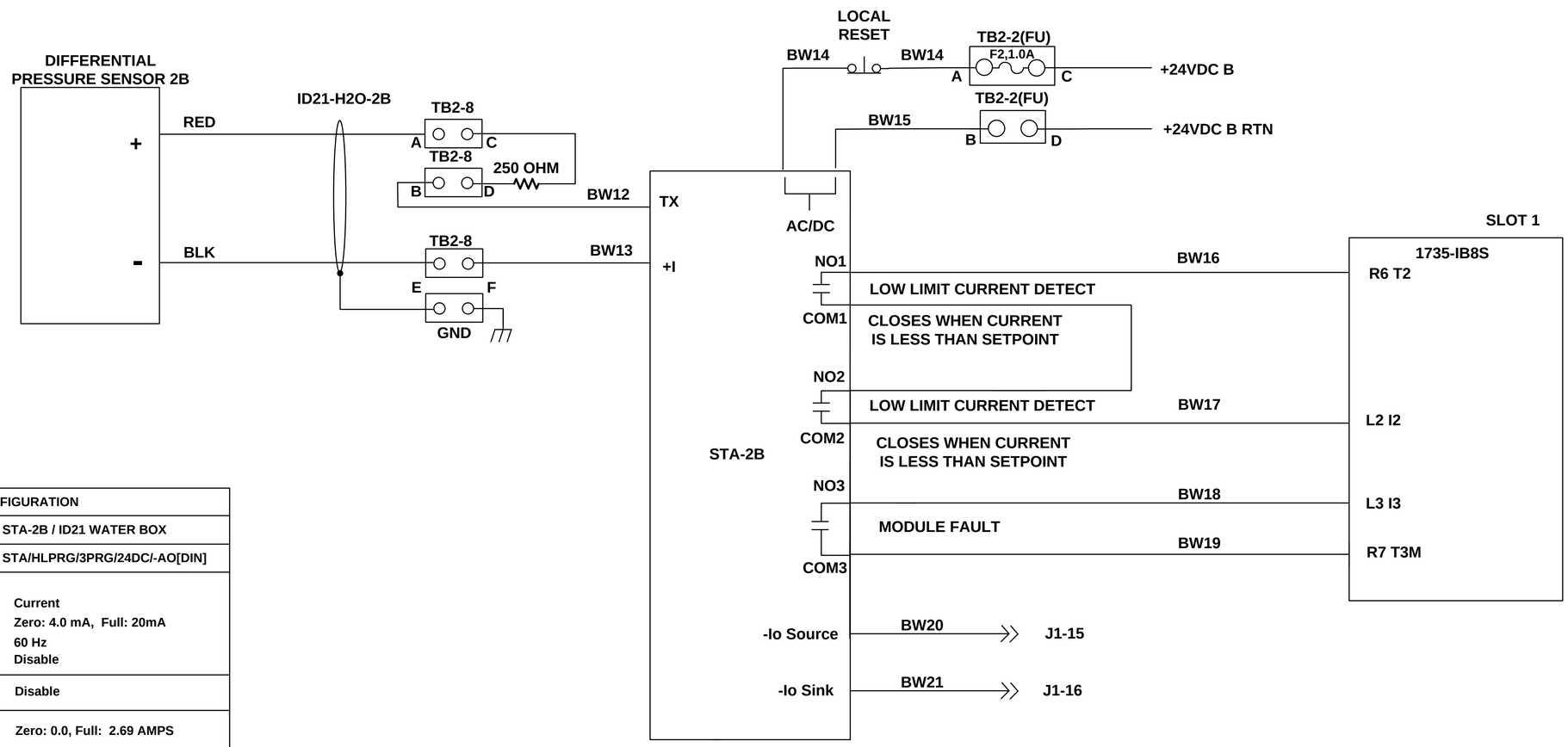

STA DEVICE PARAMETER CONFIGURATION		
DEVICE NAME / LOCATION:	STA-2B / ID21 WATER BOX	
MODEL :	STA/HLPRG/3PRG/24DC/-AO[DIN]	
INPUT		
Measurement Type:	Current	
Input Range:	Zero: 4.0 mA, Full: 20mA	
Filter Settings:	60 Hz	
Broken wire:	Disable	
TRIMMING	Disable	
SCALING	Zero: 0.0, Full: 2.69 AMPS	
DISPLAY		
Display Source:	Process Variable (PV)	
Precision:	Auto	
ALARMS	ALARM 1	ALARM 2
Mode:	Low Trip	Hi Trip
Latching:	Off	Off
Trip point:	0.7 GPM	0.0 GPM
Dead Band:	0.0 GPM	0.0 GPM
Delay:	0 s	0 s
ANALOG OUTPUT		
Mode:	Current	
Fail mode:	Fail Low	
AO Range:	Zero: 4.0, Full: 20.0 mA	
Damping:	Disable (0.0 s)	

B

LT-EL-BL-EI-PPS-1210-92

LT-EL-BL-EI (DRAWING DIRECTORY)	LT-EL-BL-EI-PPS-1210-92 (DRAWING NUMBER)	A (REV)
COMPUTER REPRODUCIBLE	SCALE: N/A	SHEET 7 OF 14

REV	DESCRIPTION	DATE	BY	CHECKED	APP
	SEE SHEET 1				

WATER FLOW INTERLOCK CHANNEL 3 B CHAIN

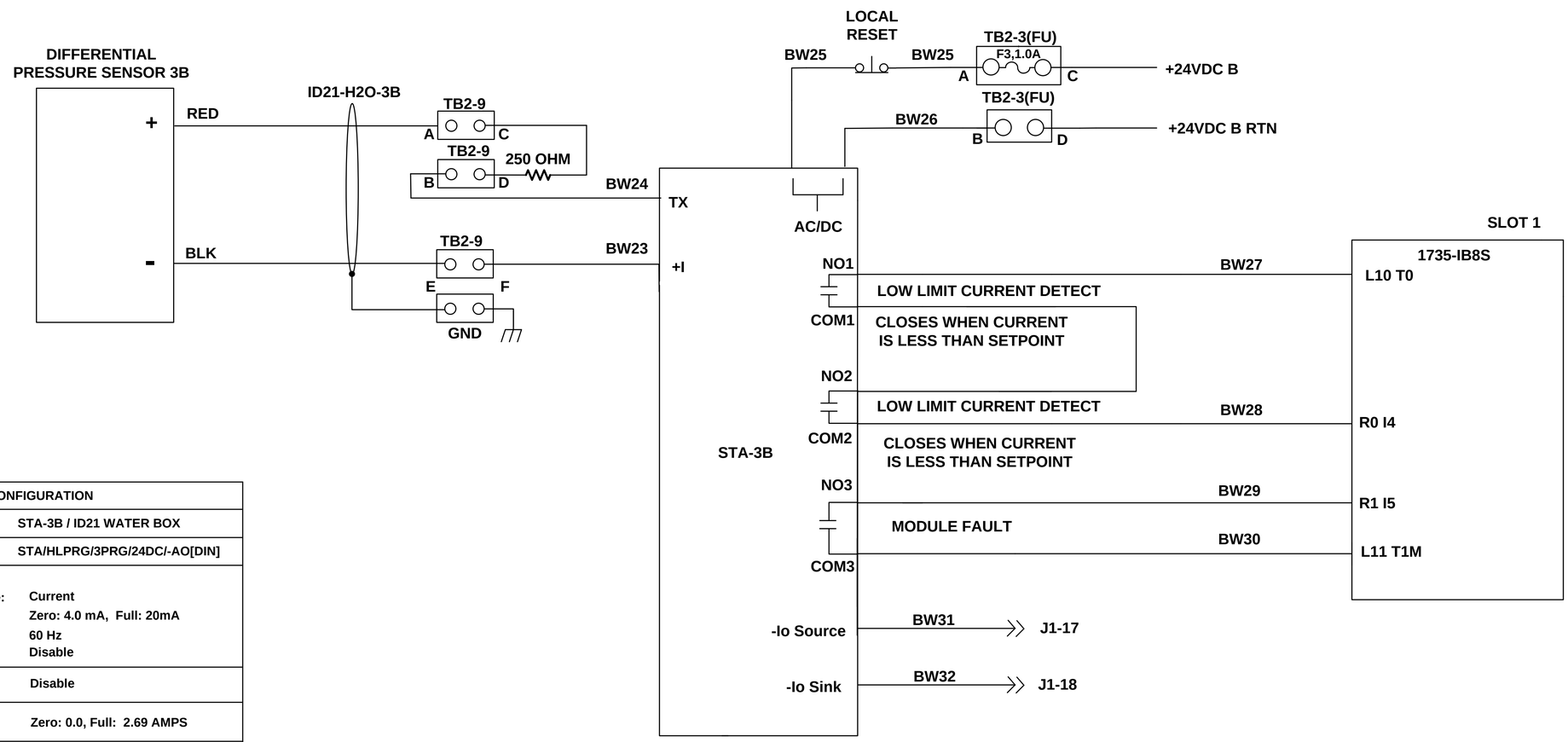

STA DEVICE PARAMETER CONFIGURATION		
DEVICE NAME / LOCATION:	STA-3B / ID21 WATER BOX	
MODEL :	STA/HLPRG/3PRG/24DC/-AO[DIN]	
INPUT		
Measurement Type:	Current	
Input Range:	Zero: 4.0 mA, Full: 20mA	
Filter Settings:	60 Hz	
Broken wire:	Disable	
TRIMMING	Disable	
SCALING	Zero: 0.0, Full: 2.69 AMPS	
DISPLAY		
Display Source:	Process Variable (PV)	
Precision:	Auto	
ALARMS	ALARM 1	ALARM 2
Mode:	Low Trip	Hi Trip
Latching:	Off	Off
Trip point:	1.2 GPM	0.0 GPM
Dead Band:	0.0 GPM	0.0 GPM
Delay:	0 s	0 s
ANALOG OUTPUT		
Mode:	Current	
Fail mode:	Fail Low	
AO Range:	Zero: 4.0, Full: 20.0 mA	
Damping:	Disable (0.0 s)	

B

LT-EL-BL-EI-PPS-1210-92

LT-EL-BL-EI (DRAWING DIRECTORY)	LT-EL-BL-EI-PPS-1210-92 (DRAWING NUMBER)	A (REV)
COMPUTER REPRODUCIBLE	SCALE: N/A	SHEET 8 OF 14

REV	DESCRIPTION	DATE	BY	CHECKED	APP
	SEE SHEET 1				

WATER FLOW INTERLOCK CHANNEL 4 B CHAIN

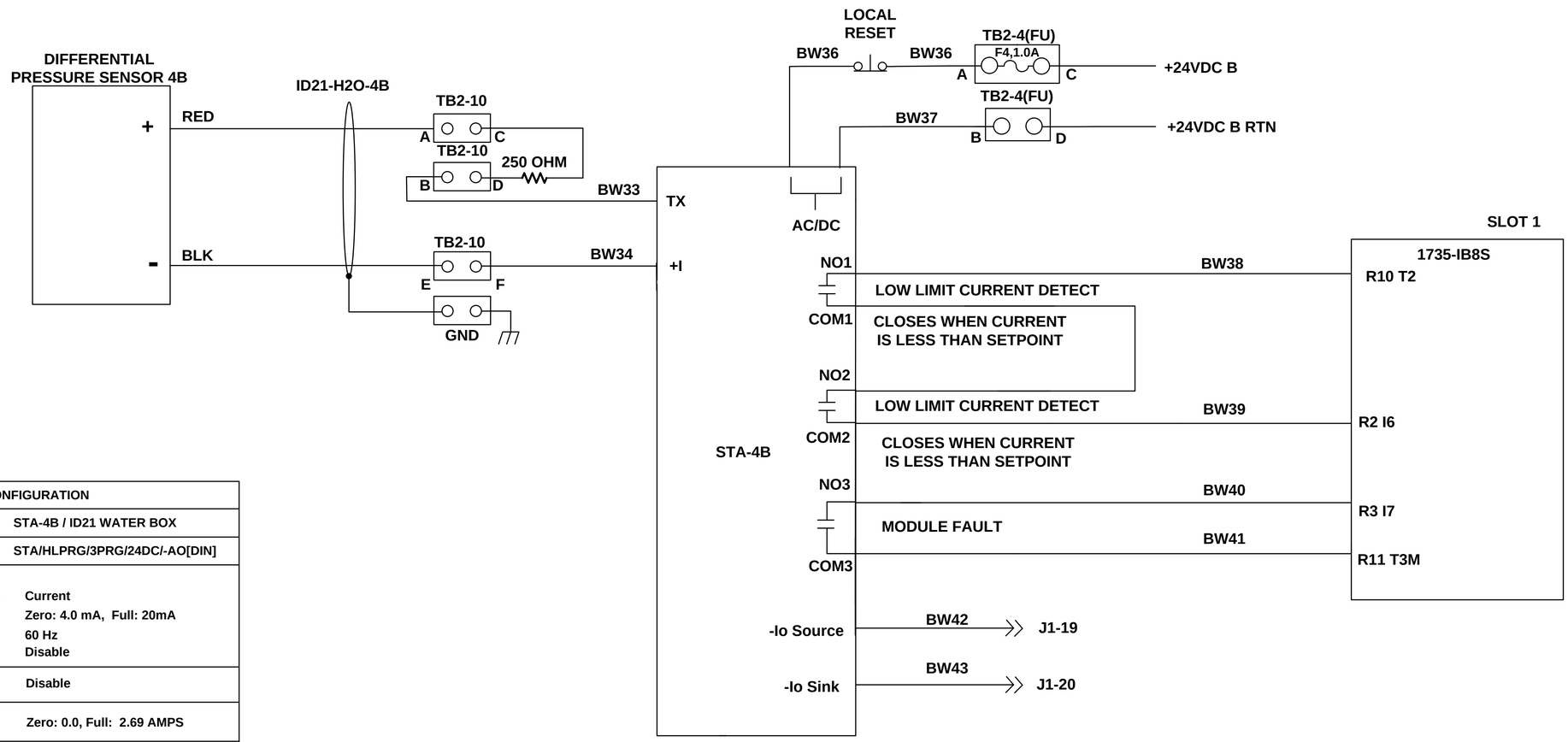

STA DEVICE PARAMETER CONFIGURATION		
DEVICE NAME / LOCATION:	STA-4B / ID21 WATER BOX	
MODEL :	STA/HLPRG/3PRG/24DC/-AO[DIN]	
INPUT		
Measurement Type:	Current	
Input Range:	Zero: 4.0 mA, Full: 20mA	
Filter Settings:	60 Hz	
Broken wire:	Disable	
TRIMMING	Disable	
SCALING	Zero: 0.0, Full: 2.69 AMPS	
DISPLAY		
Display Source:	Process Variable (PV)	
Precision:	Auto	
ALARMS	ALARM 1	ALARM 2
Mode:	Low Trip	Hi Trip
Latching:	Off	Off
Trip point:	0.7 GPM	0.0 GPM
Dead Band:	0.0 GPM	0.0 GPM
Delay:	0 s	0 s
ANALOG OUTPUT		
Mode:	Current	
Fail mode:	Fail Low	
AO Range:	Zero: 4.0, Full: 20.0 mA	
Damping:	Disable (0.0 s)	

B

LT-EL-BL-EI-PPS-1210-92

LT-EL-BL-EI (DRAWING DIRECTORY)	LT-EL-BL-EI-PPS-1210-92 (DRAWING NUMBER)	A (REV)
COMPUTER REPRODUCIBLE	SCALE: N/A	SHEET 9 OF 14

REV	DESCRIPTION	DATE	BY	CHECKED	APP
	SEE SHEET 1				

WATER FLOW INTERLOCK CHANNEL 5 B CHAIN

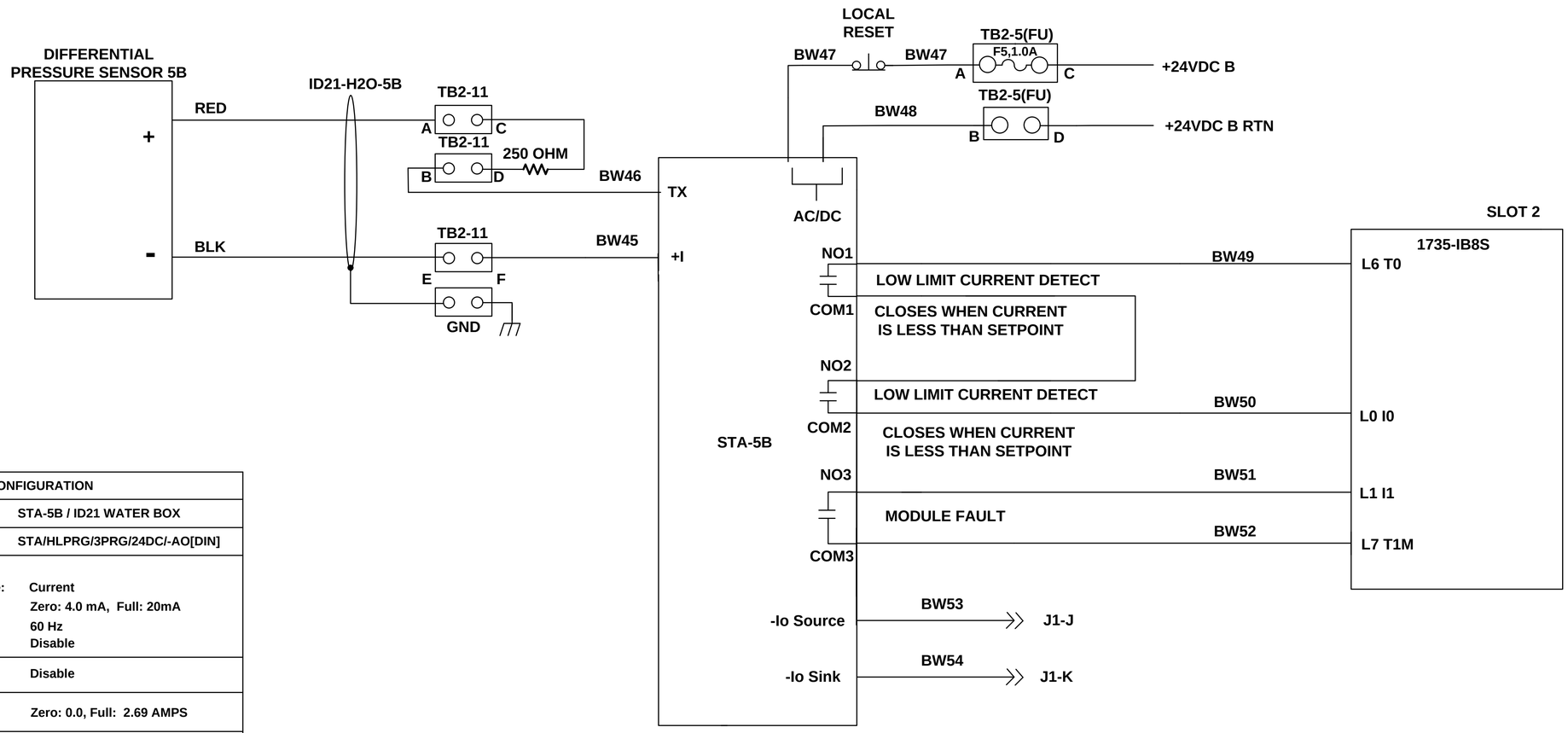

STA DEVICE PARAMETER CONFIGURATION		
DEVICE NAME / LOCATION:	STA-5B / ID21 WATER BOX	
MODEL :	STA/HLPRG/3PRG/24DC/-AO[DIN]	
INPUT		
Measurement Type:	Current	
Input Range:	Zero: 4.0 mA, Full: 20mA	
Filter Settings:	60 Hz	
Broken wire:	Disable	
TRIMMING	Disable	
SCALING	Zero: 0.0, Full: 2.69 AMPS	
DISPLAY		
Display Source:	Process Variable (PV)	
Precision:	Auto	
ALARMS	ALARM 1	ALARM 2
Mode:	Low Trip	Hi Trip
Latching:	Off	Off
Trip point:	0.4 GPM	0.0 GPM
Dead Band:	0.0 GPM	0.0 GPM
Delay:	0 s	0 s
ANALOG OUTPUT		
Mode:	Current	
Fail mode:	Fail Low	
AO Range:	Zero: 4.0, Full: 20.0 mA	
Damping:	Disable (0.0 s)	

B

LT-EL-BL-EI-PPS-1210-92

LT-EL-BL-EI (DRAWING DIRECTORY)	LT-EL-BL-EI-PPS-1210-92 (DRAWING NUMBER)	A (REV)
COMPUTER REPRODUCIBLE	SCALE: N/A	SHEET 10 OF 14

REV	DESCRIPTION	DATE	BY	CHECKED	APP
	SEE SHEET 1				

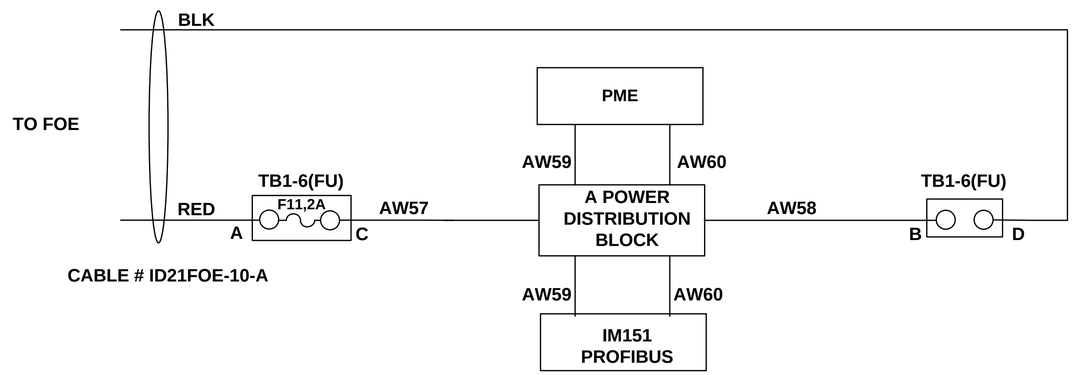

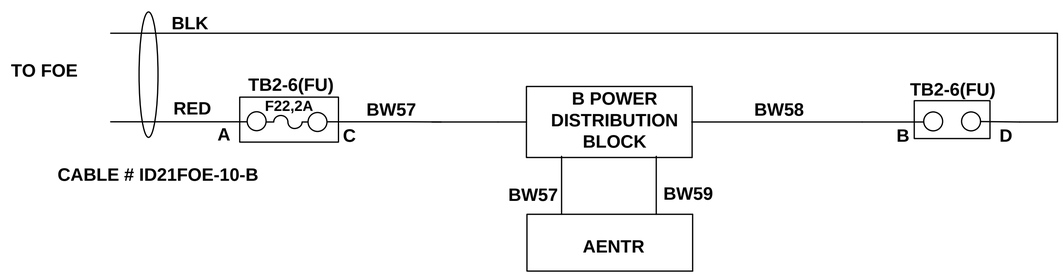

NOTES:

1. TB1-1 TO TB1-6 ARE FUSES AND JUMPED TOGETHER.
2. TB2-1 TO TB2-6 ARE FUSES AND JUMPED TOGETHER.

LT-EL-BL-EI-PPS-1210-92

LT-EL-BL-EI (DRAWING DIRECTORY)	LT-EL-BL-EI-PPS-1210-92 (DRAWING NUMBER)	A (REV)
COMPUTER REPRODUCIBLE	SCALE: N/A	SHEET 11 OF 14

REV	DESCRIPTION	DATE	BY	CHECKED	APP
	SEE SHEET 1				

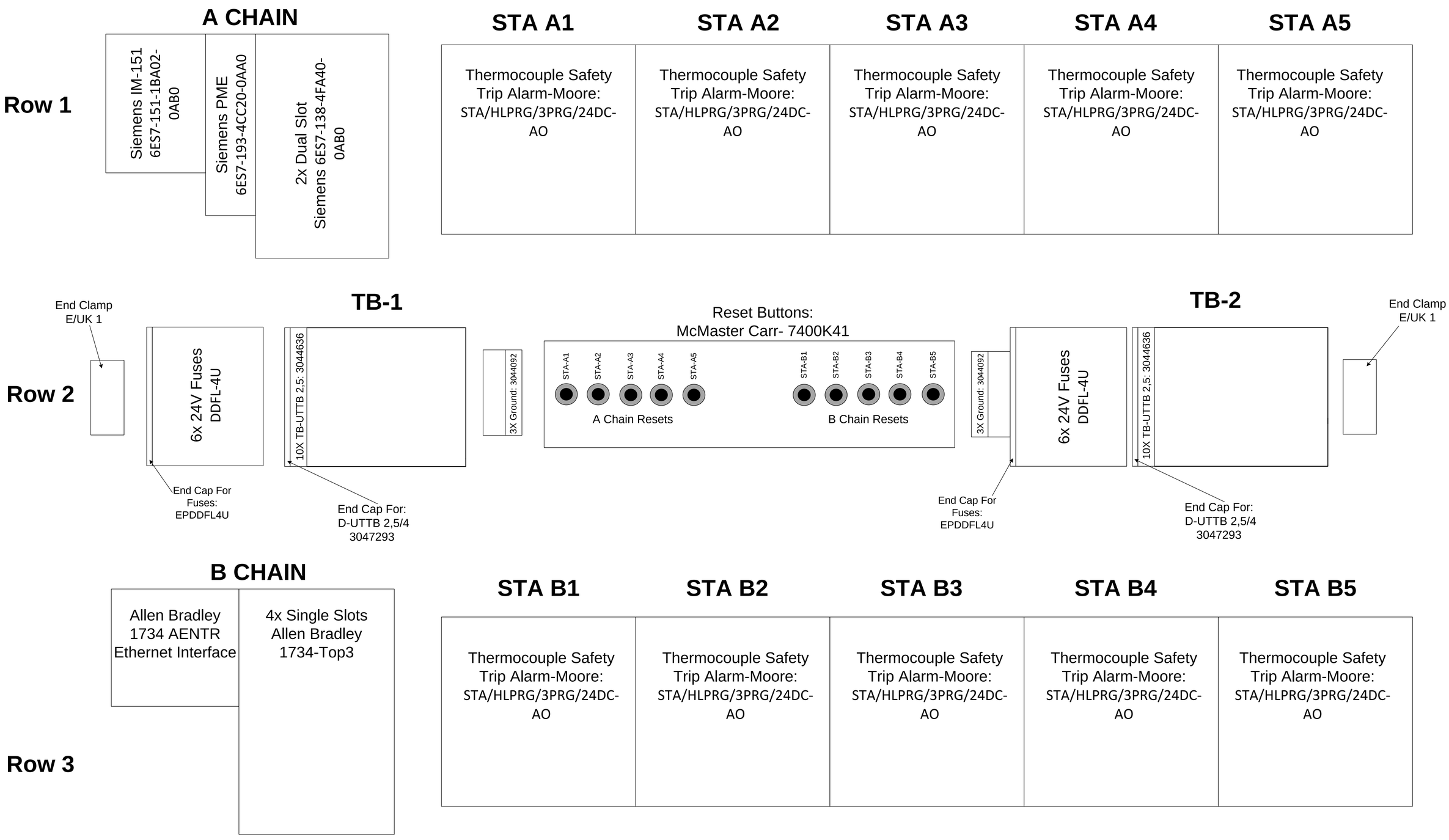

LT-EL-BL-EI	LT-EL-BL-EI-PPS-1210-92	A
DRAWING DIRECTORY	DRAWING NUMBER	REV

COMPUTER REPRODUCIBLE | SCALE: N/A | SHEET 12 OF 14

LT-EL-BL-EI-PPS-1210-92

REV	DESCRIPTION	DATE	BY	CHECKED	APP
	SEE SHEET 1				

ROW 1:						
SLOT	MODULE	SOCKET	DESCRIPTION	VENDOR		
	6ES7-151-1BA02-0AB0	N/A	IM 151	SIEMENS		
1	6ES7-138-4CA50-0AB0	6ES7-193-4CC20-0AA0	POWER MODULE PM-E	SIEMENS		
2	6ES7-138-4FA04-0AB0	6ES7-193-4CF40-0AA0	4/8 FDI 8 SAFE IN	SIEMENS		
3	6ES7-138-4FA04-0AB0	6ES7-193-4CF40-0AA0	4/8 FDI 8 SAFE IN	SIEMENS		
STA A1	STA/HLPRG/3PRG/24DC-AO [DIN]	N/A	THERMOCOUPLE SAFETY TRIP ALARM	MOORE		
STA A2	STA/HLPRG/3PRG/24DC-AO [DIN]	N/A	THERMOCOUPLE SAFETY TRIP ALARM	MOORE		
STA A3	STA/HLPRG/3PRG/24DC-AO [DIN]	N/A	THERMOCOUPLE SAFETY TRIP ALARM	MOORE		
STA A4	STA/HLPRG/3PRG/24DC-AO [DIN]	N/A	THERMOCOUPLE SAFETY TRIP ALARM	MOORE		
STA A5	STA/HLPRG/3PRG/24DC-AO [DIN]	N/A	THERMOCOUPLE SAFETY TRIP ALARM	MOORE		
ROW 2:						
TB1	[6]	1>6 [8]	[3]	[1]	[2]	
BUTTON	COMPONENT		DESCRIPTION	VENDOR		
1	7400K41		POWER DISTRIBUTION BLOCK A	MCMASTER		
2	7400K41		POWER DISTRIBUTION BLOCK A	MCMASTER		
3	7400K41		POWER DISTRIBUTION BLOCK A	MCMASTER		
4	7400K41		POWER DISTRIBUTION BLOCK A	MCMASTER		
5	7400K41		POWER DISTRIBUTION BLOCK A	MCMASTER		
6	7400K41		POWER DISTRIBUTION BLOCK B	MCMASTER		
7	7400K41		POWER DISTRIBUTION BLOCK B	MCMASTER		
8	7400K41		POWER DISTRIBUTION BLOCK B	MCMASTER		
9	7400K41		POWER DISTRIBUTION BLOCK B	MCMASTER		
10	7400K41		POWER DISTRIBUTION BLOCK B	MCMASTER		
TB2	[[6]	[8]	[3]	[1]	[2]	
ROW 3:						
SLOT	MODULE	SOCKET	DESCRIPTION	VENDOR		
1	1734-AENTR	N/A	24V DC EHTERNET ADAPTER	AB		
2	1734-IB8S	1734-TOP 3	AB INPUT F 8 SAFETY IN	AB		
3	1734-IB8S	1734-TOP 3	AB INPUT F 8 SAFETY IN	AB		
STA B1	STA/HLPRG/3PRG/24DC-AO [DIN]	N/A	THERMOCOUPLE SAFETY TRIP ALARM	MOORE		
STA B2	STA/HLPRG/3PRG/24DC-AO [DIN]	N/A	THERMOCOUPLE SAFETY TRIP ALARM	MOORE		
STA B3	STA/HLPRG/3PRG/24DC-AO [DIN]	N/A	THERMOCOUPLE SAFETY TRIP ALARM	MOORE		
STA B4	STA/HLPRG/3PRG/24DC-AO [DIN]	N/A	THERMOCOUPLE SAFETY TRIP ALARM	MOORE		
STA B5	STA/HLPRG/3PRG/24DC-AO [DIN]	N/A	THERMOCOUPLE SAFETY TRIP ALARM	MOORE		

LT-EL-BL-EI-PPS-1210-92

REV	DESCRIPTION	DATE	BY	CHECKED	APP
	SEE SHEET 1				

Paired part numbers are color coordinated.

	[1]
TYPE	
Double-level terminal block - UTTB 2,5	
GROUND	
End cover - D-UTTB 2,5/4	
Spacer plate - DP-UTTB 2,5/4	[2]
End clamp - E/UK 1	
End Plate; Term Blk; DIN Rail; Gray;	
DIN Rail Terminal Blocks UT 2 5/4-QUATTRO	
24V FUSES	
Feed-through terminal block - UT 2,5	
End cover - D-UT 2,5/10	[3]
End cover - D-UT 2,5/4-QUATTRO	
Feed-through terminal block - UT 4	
Feed-through terminal block - UDK 4	
KONNECT IT 3 CIRCUIT TERMINAL BLOCK	
3 CIRCUIT TERMINAL BLOCK COVER	
99321 ALTECH DIODE TERMINAL BLOCK	[4]
ALTECH DIODE TB END COVER	
Diode TB - UTTB 2,5 O-UL/UR-UL	
	[5]
	[6]

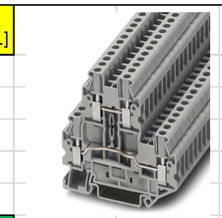
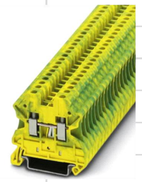

	[7]
	[8]
	[9]
	[10]
	[11]
	[12]

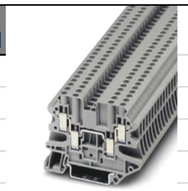

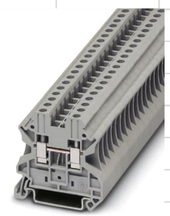

	[13]
	[14]
	[15]
	[16]
	[17]
	[18]

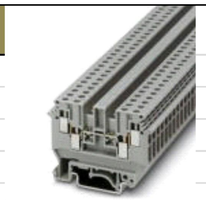

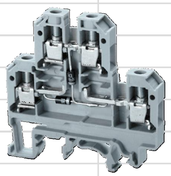

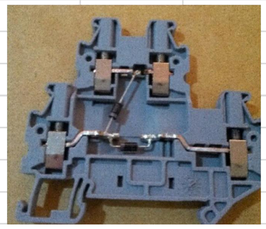

LT-EL-BL-EI DRAWING DIRECTORY	LT-EL-BL-EI-PPS-1210-92 DRAWING NUMBER	A REV
COMPUTER REPRODUCIBLE	SCALE: N/A	SHEET 14 OF 14

LT-EL-BL-EI-PPS-1210-92

REV	DESCRIPTION	DATE	BY	CHECKED	APP
A	INITIAL RELEASE	6/07/2016	SEJ	JM	AC
B	REVISED PER ECN LT-ECN-016-1527	6/27/2016	SEJ	JM	AC

WATER FLOW INTERLOCK CHANNEL 1 A CHAIN

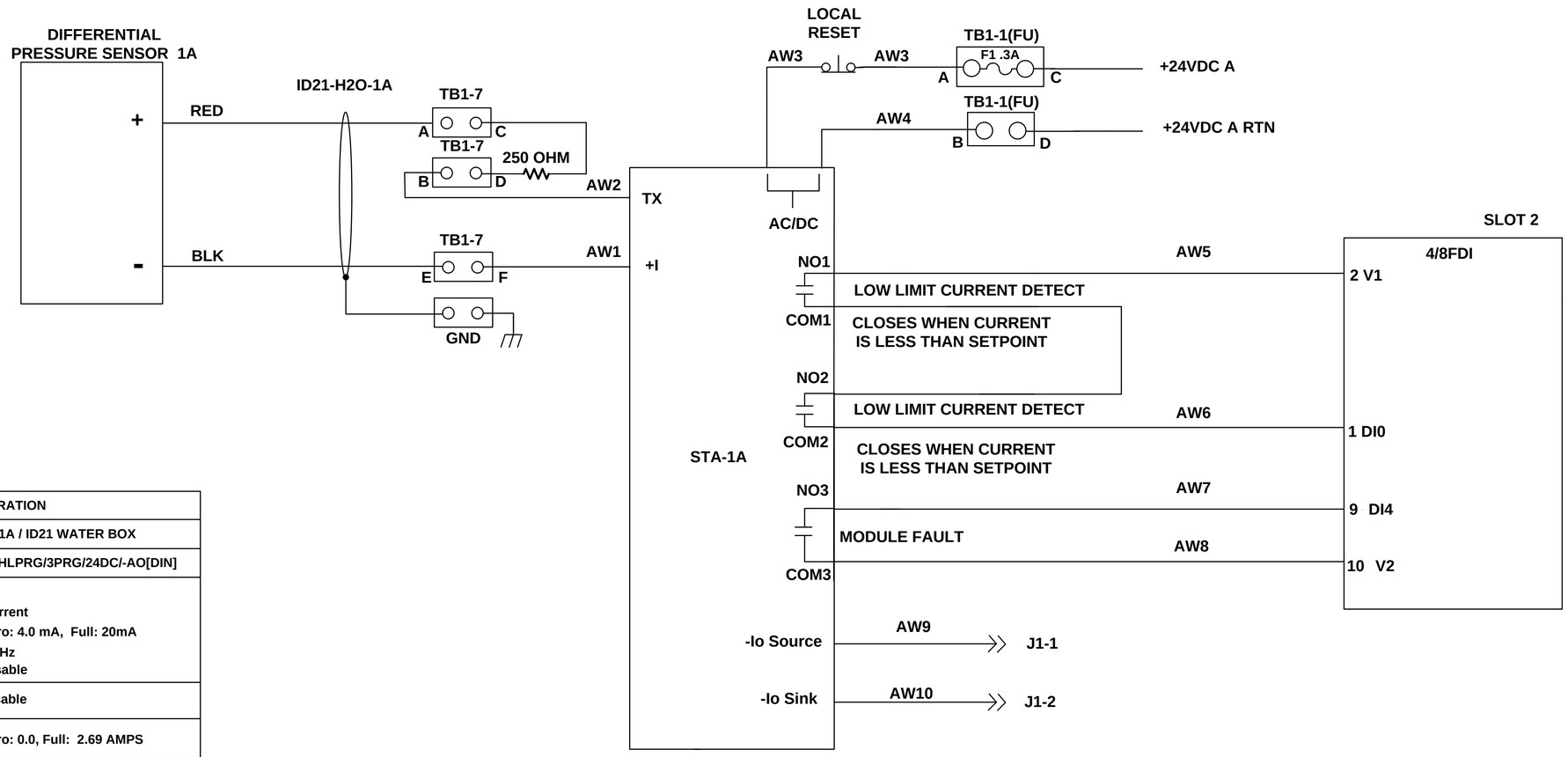

STA DEVICE PARAMETER CONFIGURATION		
DEVICE NAME / LOCATION:	STA-1A / ID21 WATER BOX	
MODEL :	STA/HLPRG/3PRG/24DC/-AO[DIN]	
INPUT		
Measurement Type:	Current	
Input Range:	Zero: 4.0 mA, Full: 20mA	
Filter Settings:	60 Hz	
Broken wire:	Disable	
TRIMMING	Disable	
SCALING	Zero: 0.0, Full: 2.69 AMPS	
DISPLAY		
Display Source:	Process Variable (PV)	
Precision:	Auto	
ALARMS	ALARM 1	ALARM 2
Mode:	Low Trip	Hi Trip
Latching:	Off	Off
Trip point:	1.0 GPM	0.0 GPM
Dead Band:	0.0 GPM	0.0 GPM
Delay:	0 s	0 s
ANALOG OUTPUT		
Mode:	Current	
Fail mode:	Fail Low	
AO Range:	Zero: 4.0, Full: 20.0 mA	
Damping:	Disable (0.0 s)	

A

LT-EL-BL-EI-PPS-1210-92

BROOKHAVEN NATIONAL LABORATORY

BROOKHAVEN NATIONAL LABORATORY
BROOKHAVEN SCIENCE ASSOCIATES
UPTON, NEW YORK 11973
Exploring Life's Mysteries, Protecting its Future

UNLESS OTHERWISE SPECIFIED INTEGER TOLERANCES ± .06
DECIMAL TOLERANCES .X ± .030 .XX ± .015 .XXX ± .010
ANGULAR TOLERANCE ± 0.5°
UNSPECIFIED RADII .02 MAX
125 BREAK SHARP CORNERS AND EDGES
FINISH MAX .03 MIN .005

UNLESS OTHERWISE SPECIFIED DIMENSIONS ARE IN INCHES DIMENSIONS IN [**] ARE MILLIMETERS EQUIV. FOR REF. ONLY

ESH&Q RISK LEVEL A-2

INTERPRET DRAWING AS PER ANSI Y14.5 OR Y32.2

		DATE	OUTSTANDING ECN'S
DRWN BY	S. JARZABKOWSKI	6/07/2016	
CHK BY	J. MALLEY	6/09/2016	
ENG APP	S. BUDA	6/08/2016	
SUPV APP	G. GANETIS	6/10/2016	
QA APP	E. CHESWICK	6/09/2016	
ESH APP	R. LEE	6/09/2016	

NSLS II NATIONAL SYNCHROTRON LIGHT SOURCE II

WIRING DIAGRAM,
ID21 – H20 (ESM-H2O)
A CHAIN AND B CHAIN

LT-EL-BL-EI	LT-EL-BL-EI-PPS-1210-92	B
DRAWING DIRECTORY	DRAWING NUMBER	REV

COMPUTER REPRODUCIBLE | SCALE: N/A | SHEET 1 OF 14

JOB NUMBER | USED ON DWG. NO.

REV	DESCRIPTION	DATE	BY	CHECKED	APP
	SEE SHEET 1				

WATER FLOW INTERLOCK CHANNEL 2 A CHAIN

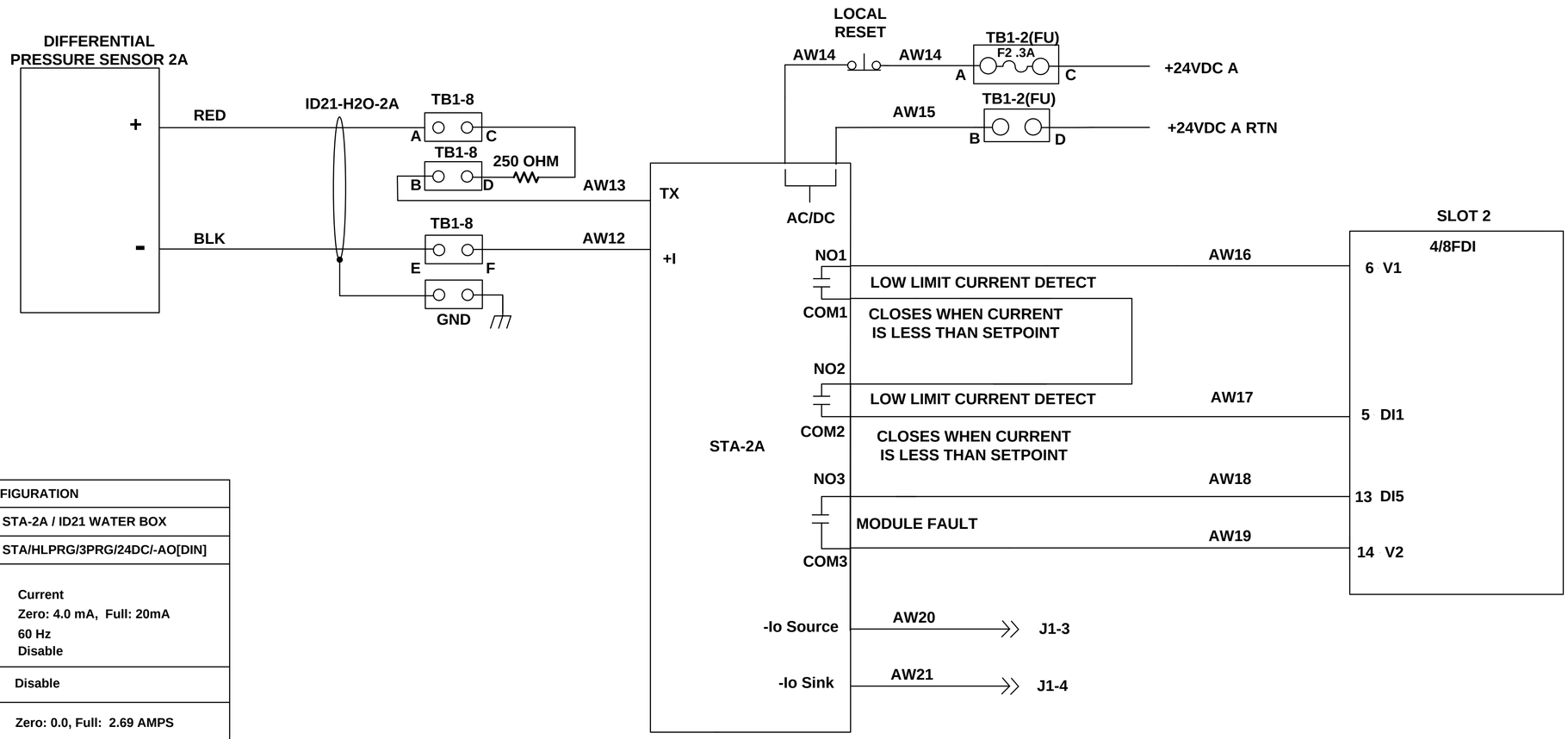

STA DEVICE PARAMETER CONFIGURATION		
DEVICE NAME / LOCATION:	STA-2A / ID21 WATER BOX	
MODEL :	STA/HLPRG/3PRG/24DC/-AO[DIN]	
INPUT		
Measurement Type:	Current	
Input Range:	Zero: 4.0 mA, Full: 20mA	
Filter Settings:	60 Hz	
Broken wire:	Disable	
TRIMMING	Disable	
SCALING	Zero: 0.0, Full: 2.69 AMPS	
DISPLAY		
Display Source:	Process Variable (PV)	
Precision:	Auto	
ALARMS	ALARM 1	ALARM 2
Mode:	Low Trip	Hi Trip
Latching:	Off	Off
Trip point:	0.7 GPM	0.0 GPM
Dead Band:	0.0 GPM	0.0 GPM
Delay:	0 s	0 s
ANALOG OUTPUT		
Mode:	Current	
Fail mode:	Fail Low	
AO Range:	Zero: 4.0, Full: 20.0 mA	
Damping:	Disable (0.0 s)	

A

LT-EL-BL-EI (DRAWING DIRECTORY)	LT-EL-BL-EI-PPS-1210-92 (DRAWING NUMBER)	B (REV)
COMPUTER REPRODUCIBLE	SCALE: N/A	SHEET 2 OF 14

LT-EL-BL-EI-PPS-1210-92

REV	DESCRIPTION	DATE	BY	CHECKED	APP
	SEE SHEET 1				

WATER FLOW INTERLOCK CHANNEL 3 A CHAIN

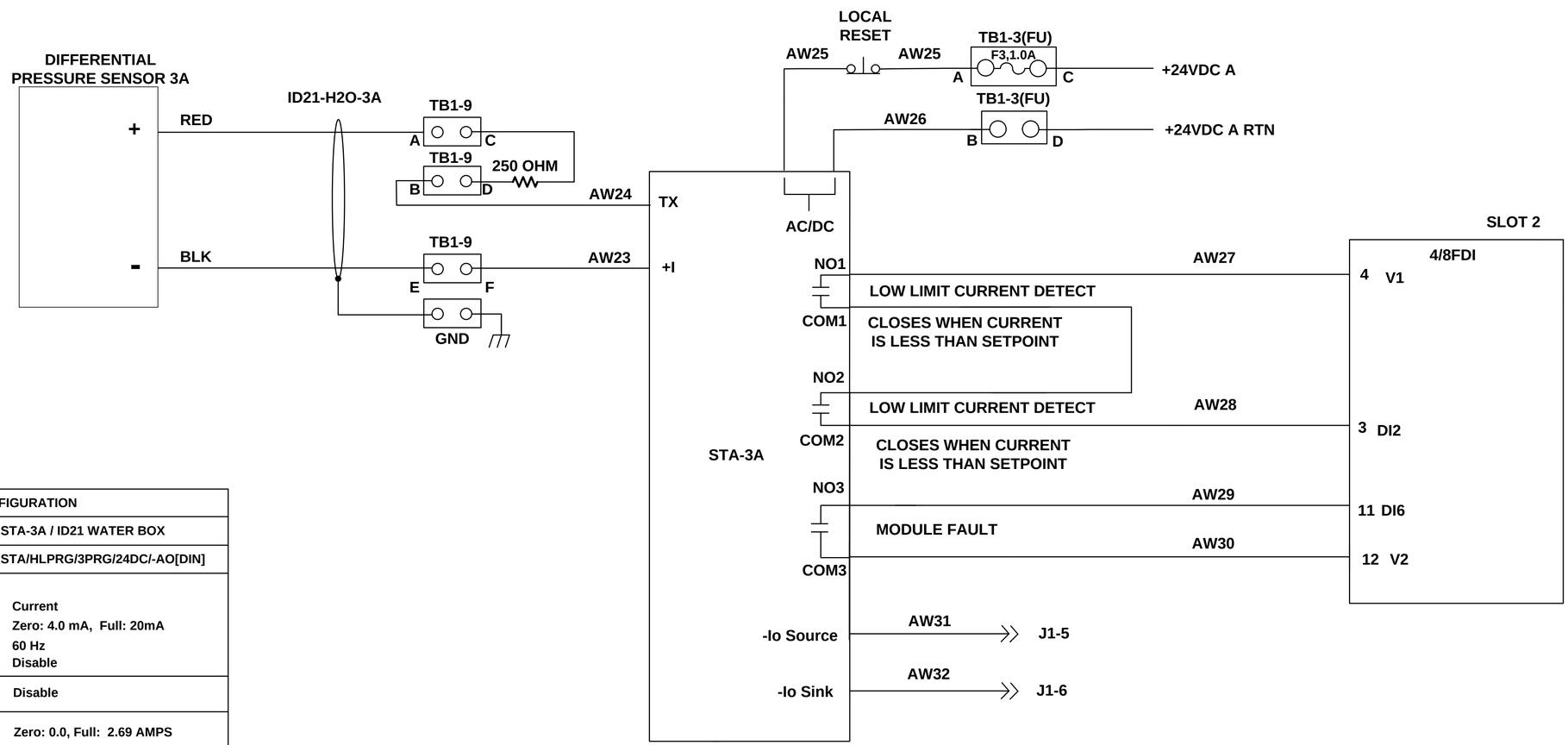

STA DEVICE PARAMETER CONFIGURATION		
DEVICE NAME / LOCATION:	STA-3A / ID21 WATER BOX	
MODEL :	STA/HLPRG/3PRG/24DC/-AO[DIN]	
INPUT		
Measurement Type:	Current	
Input Range:	Zero: 4.0 mA, Full: 20mA	
Filter Settings:	60 Hz	
Broken wire:	Disable	
TRIMMING	Disable	
SCALING	Zero: 0.0, Full: 2.69 AMPS	
DISPLAY		
Display Source:	Process Variable (PV)	
Precision:	Auto	
ALARMS	ALARM 1	ALARM 2
Mode:	Low Trip	Hi Trip
Latching:	Off	Off
Trip point:	1.2 GPM	0.0 GPM
Dead Band:	0.0 GPM	0.0 GPM
Delay:	0 s	0 s
ANALOG OUTPUT		
Mode:	Current	
Fail mode:	Fail Low	
AO Range:	Zero: 4.0, Full: 20.0 mA	
Damping:	Disable (0.0 s)	

A

LT-EL-BL-EI	LT-EL-BL-EI-PPS-1210-92	B
DRAWING DIRECTORY	DRAWING NUMBER	REV

COMPUTER REPRODUCIBLE | SCALE: N/A | SHEET 3 OF 14

LT-EL-BL-EI-PPS-1210-92

REV	DESCRIPTION	DATE	BY	CHECKED	APP
	SEE SHEET 1				

WATER FLOW INTERLOCK CHANNEL 4 A CHAIN

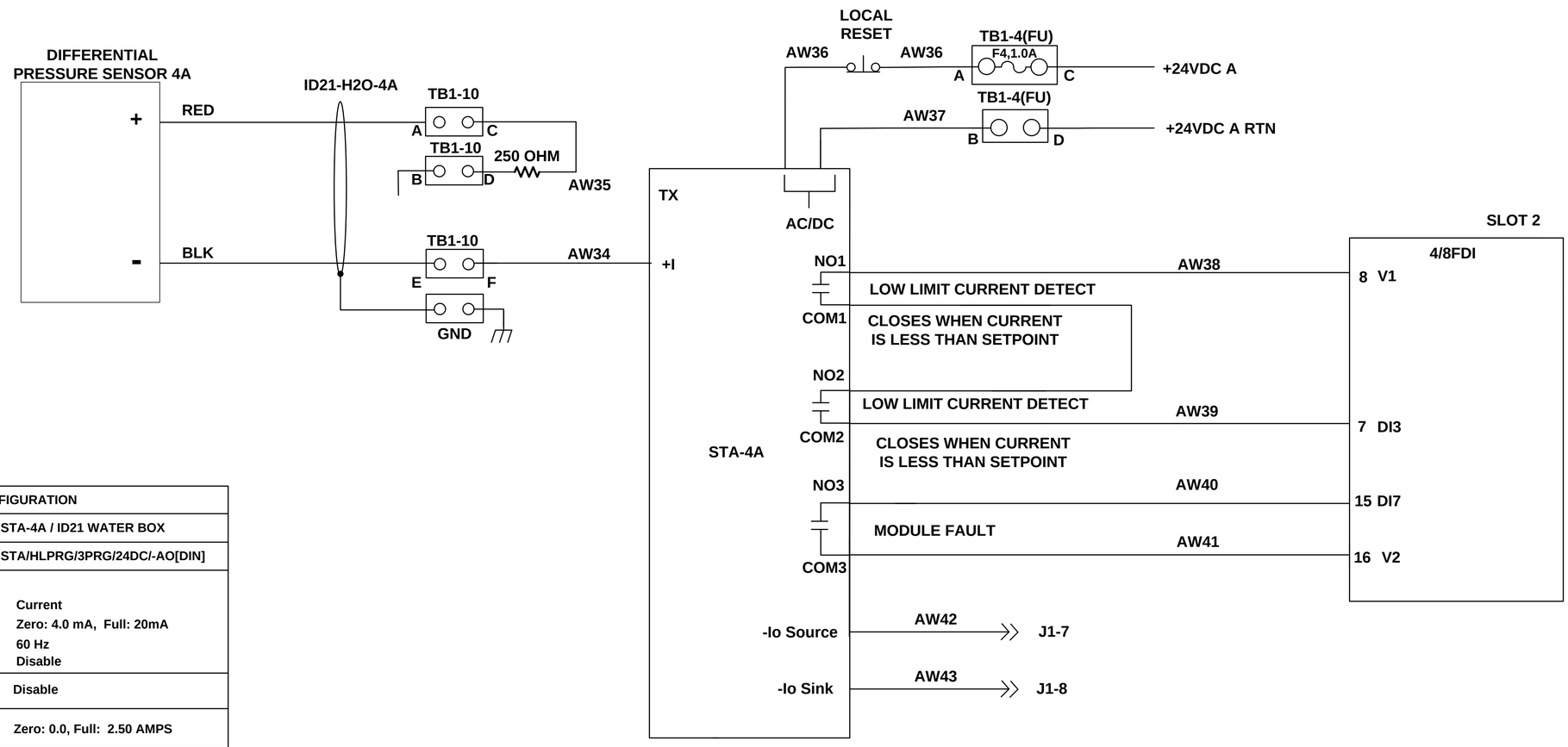

STA DEVICE PARAMETER CONFIGURATION		
DEVICE NAME / LOCATION:	STA-4A / ID21 WATER BOX	
MODEL :	STA/HLPRG/3PRG/24DC/-AO[DIN]	
INPUT		
Measurement Type:	Current	
Input Range:	Zero: 4.0 mA, Full: 20mA	
Filter Settings:	60 Hz	
Broken wire:	Disable	
TRIMMING	Disable	
SCALING	Zero: 0.0, Full: 2.50 AMPS	
DISPLAY		
Display Source:	Process Variable (PV)	
Precision:	Auto	
ALARMS	ALARM 1	ALARM 2
Mode:	Low Trip	Hi Trip
Latching:	Off	Off
Trip point:	0.7 GPM	0.0 GPM
Dead Band:	0.0 GPM	0.0 GPM
Delay:	0 s	0 s
ANALOG OUTPUT		
Mode:	Current	
Fail mode:	Fail Low	
AO Range:	Zero: 4.0, Full: 20.0 mA	
Damping:	Disable (0.0 s)	

A

LT-EL-BL-EI DRAWING DIRECTORY	LT-EL-BL-EI-PPS-1210-92 DRAWING NUMBER	B REV
COMPUTER REPRODUCIBLE	SCALE: N/A	SHEET 4 OF 14

LT-EL-BL-EI-PPS-1210-92

REV	DESCRIPTION	DATE	BY	CHECKED	APP
	SEE SHEET 1				

WATER FLOW INTERLOCK CHANNEL 5 A CHAIN

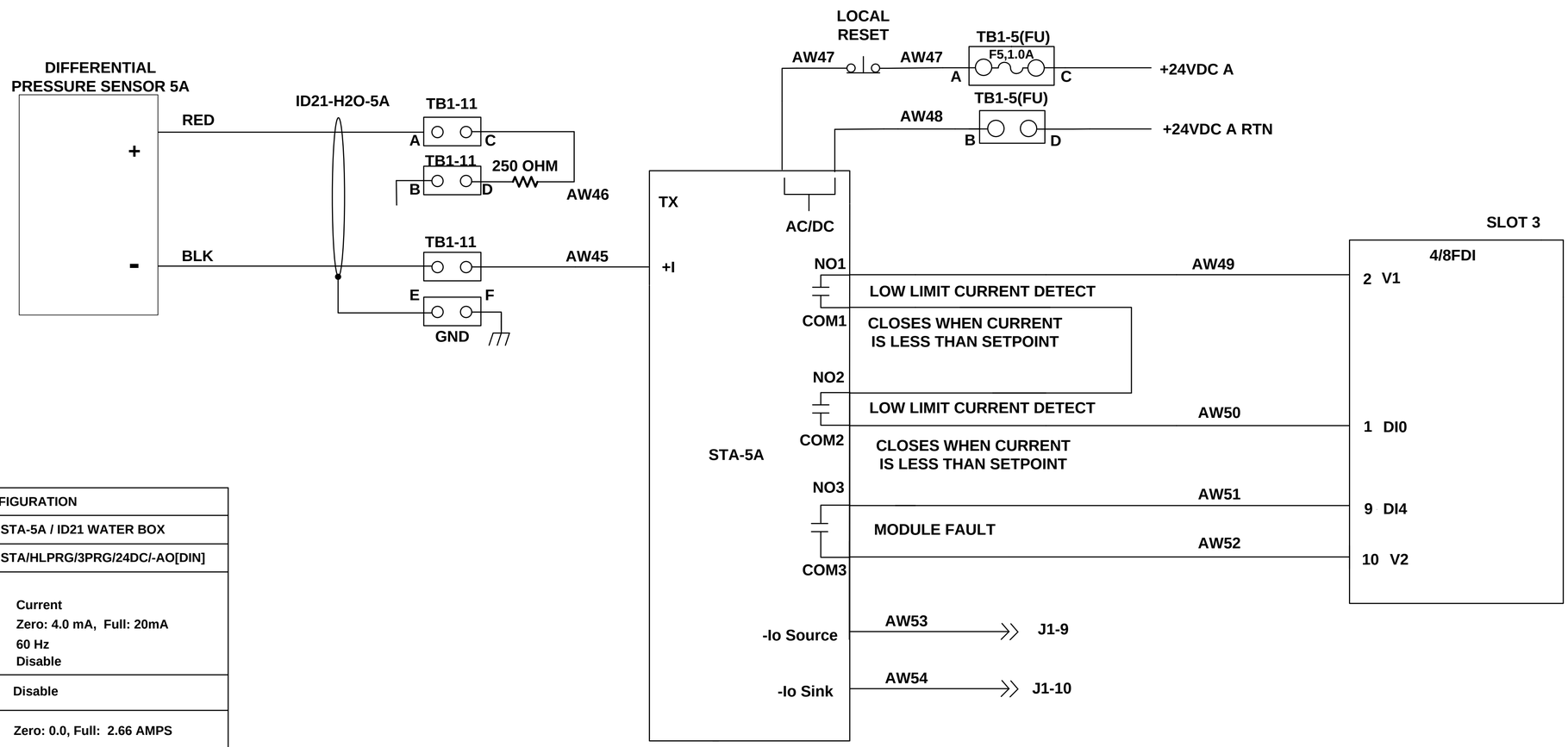

STA DEVICE PARAMETER CONFIGURATION		
DEVICE NAME / LOCATION:	STA-5A / ID21 WATER BOX	
MODEL :	STA/HLPRG/3PRG/24DC/-AO[DIN]	
INPUT		
Measurement Type:	Current	
Input Range:	Zero: 4.0 mA, Full: 20mA	
Filter Settings:	60 Hz	
Broken wire:	Disable	
TRIMMING	Disable	
SCALING	Zero: 0.0, Full: 2.66 AMPS	
DISPLAY		
Display Source:	Process Variable (PV)	
Precision:	Auto	
ALARMS	ALARM 1	ALARM 2
Mode:	Low Trip	Hi Trip
Latching:	Off	Off
Trip point:	0.4 GPM	0.0 GPM
Dead Band:	0.0 GPM	0.0 GPM
Delay:	0 s	0 s
ANALOG OUTPUT		
Mode:	Current	
Fail mode:	Fail Low	
AO Range:	Zero: 4.0, Full: 20.0 mA	
Damping:	Disable (0.0 s)	

A

LT-EL-BL-EI	LT-EL-BL-EI-PPS-1210-92	B
DRAWING DIRECTORY	DRAWING NUMBER	REV

COMPUTER REPRODUCIBLE | SCALE: N/A | SHEET 5 OF 14

LT-EL-BL-EI-PPS-1210-92

REV	DESCRIPTION	DATE	BY	CHECKED	APP
	SEE SHEET 1				

WATER FLOW INTERLOCK CHANNEL 1 B CHAIN

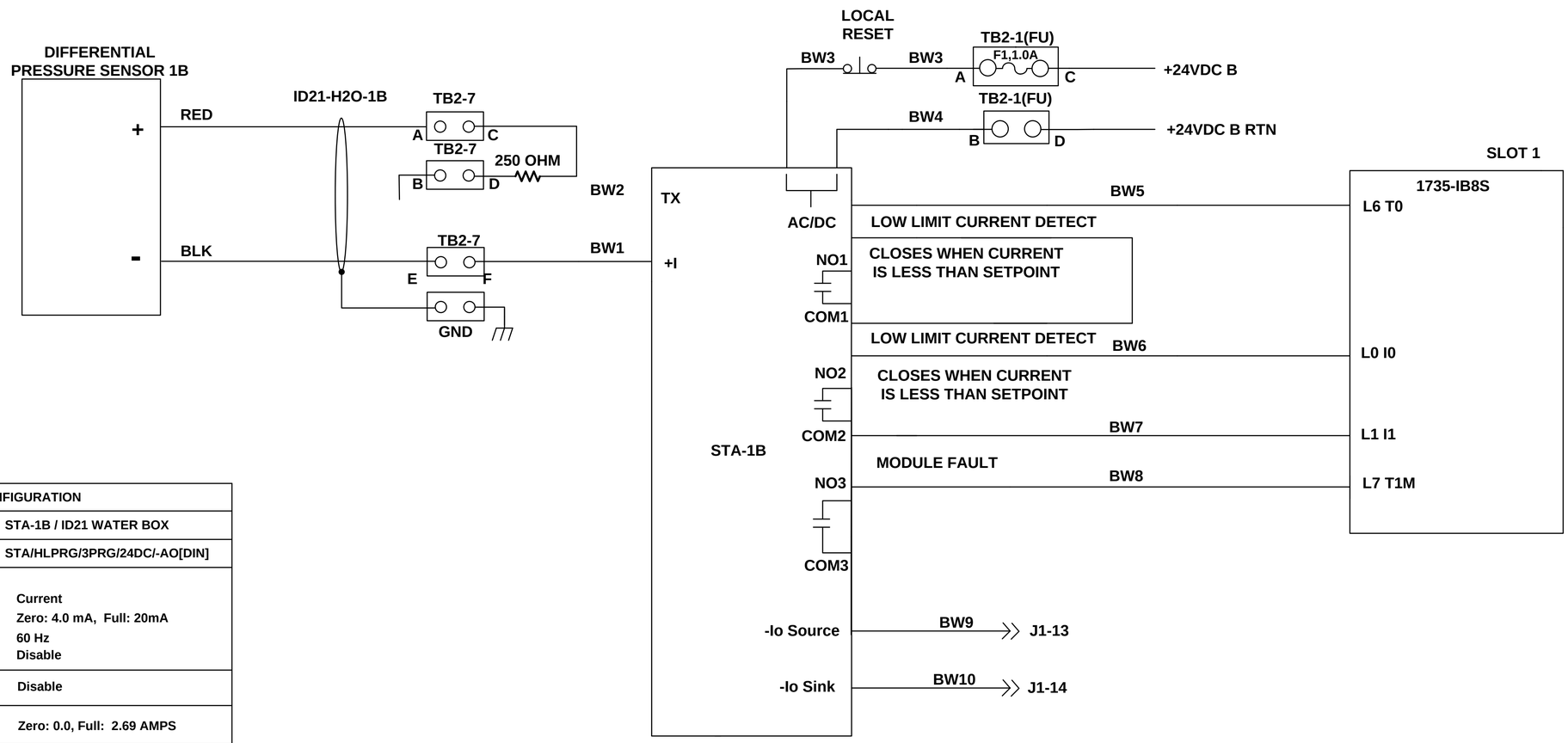

STA DEVICE PARAMETER CONFIGURATION		
DEVICE NAME / LOCATION:	STA-1B / ID21 WATER BOX	
MODEL :	STA/HLPRG/3PRG/24DC/-AO[DIN]	
INPUT		
Measurement Type:	Current	
Input Range:	Zero: 4.0 mA, Full: 20mA	
Filter Settings:	60 Hz	
Broken wire:	Disable	
TRIMMING	Disable	
SCALING	Zero: 0.0, Full: 2.69 AMPS	
DISPLAY		
Display Source:	Process Variable (PV)	
Precision:	Auto	
ALARMS	ALARM 1	ALARM 2
Mode:	Low Trip	Hi Trip
Latching:	Off	Off
Trip point:	1.0 GPM	0.0 GPM
Dead Band:	0.0 GPM	0.0 GPM
Delay:	0 s	0 s
ANALOG OUTPUT		
Mode:	Current	
Fail mode:	Fail Low	
AO Range:	Zero: 4.0, Full: 20.0 mA	
Damping:	Disable (0.0 s)	

B

LT-EL-BL-EI-PPS-1210-92

LT-EL-BL-EI (DRAWING DIRECTORY)	LT-EL-BL-EI-PPS-1210-92 (DRAWING NUMBER)	B (REV)
COMPUTER REPRODUCIBLE	SCALE: N/A	SHEET 6 OF 14

REV	DESCRIPTION	DATE	BY	CHECKED	APP
	SEE SHEET 1				

WATER FLOW INTERLOCK CHANNEL 2 B CHAIN

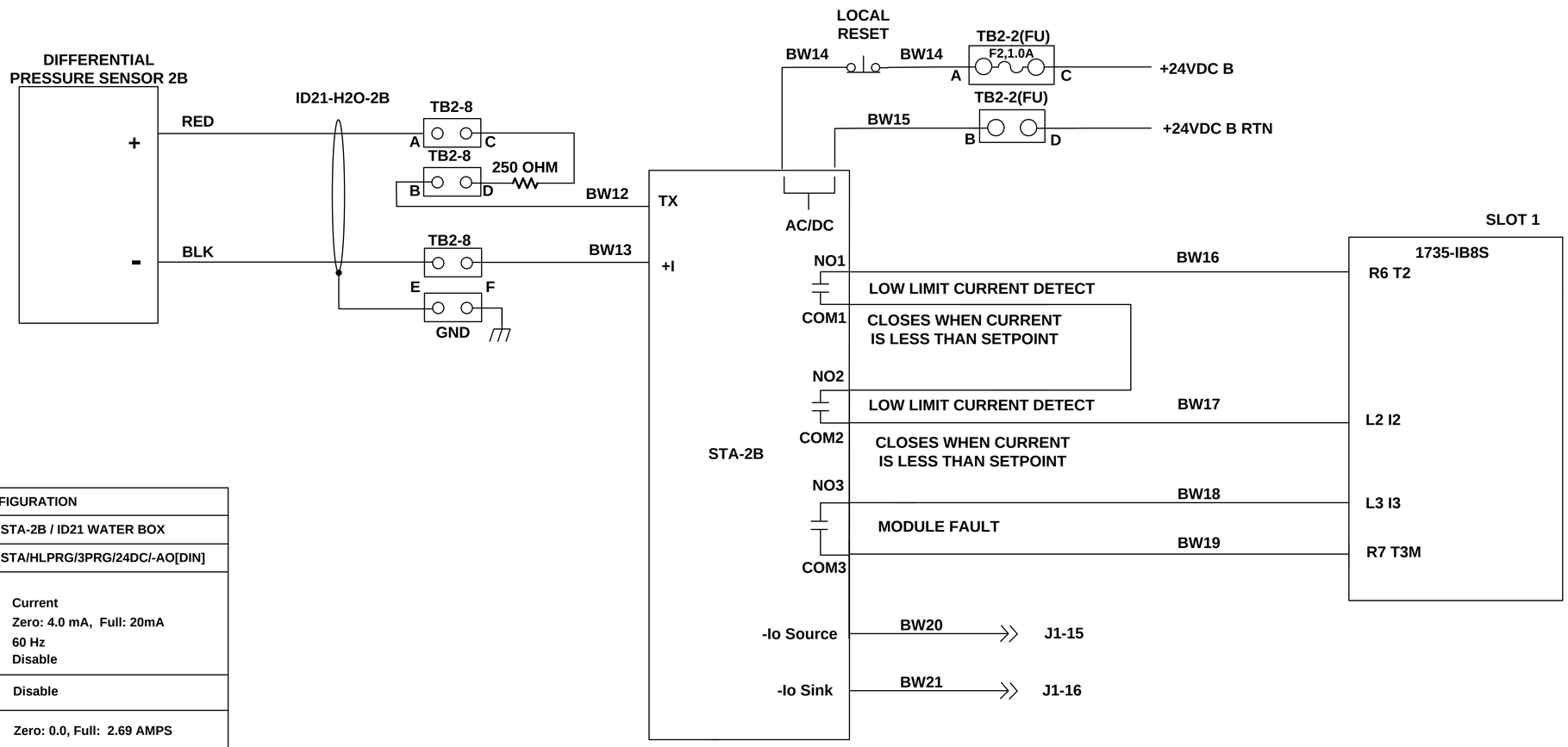

STA DEVICE PARAMETER CONFIGURATION		
DEVICE NAME / LOCATION:	STA-2B / ID21 WATER BOX	
MODEL :	STA/HLPRG/3PRG/24DC/-AO[DIN]	
INPUT		
Measurement Type:	Current	
Input Range:	Zero: 4.0 mA, Full: 20mA	
Filter Settings:	60 Hz	
Broken wire:	Disable	
TRIMMING	Disable	
SCALING	Zero: 0.0, Full: 2.69 AMPS	
DISPLAY		
Display Source:	Process Variable (PV)	
Precision:	Auto	
ALARMS	ALARM 1	ALARM 2
Mode:	Low Trip	Hi Trip
Latching:	Off	Off
Trip point:	0.7 GPM	0.0 GPM
Dead Band:	0.0 GPM	0.0 GPM
Delay:	0 s	0 s
ANALOG OUTPUT		
Mode:	Current	
Fail mode:	Fail Low	
AO Range:	Zero: 4.0, Full: 20.0 mA	
Damping:	Disable (0.0 s)	

B

LT-EL-BL-EI-PPS-1210-92

LT-EL-BL-EI (DRAWING DIRECTORY)	LT-EL-BL-EI-PPS-1210-92 (DRAWING NUMBER)	B (REV)
COMPUTER REPRODUCIBLE	SCALE: N/A	SHEET 7 OF 14

REV	DESCRIPTION	DATE	BY	CHECKED	APP
	SEE SHEET 1				

WATER FLOW INTERLOCK CHANNEL 3 B CHAIN

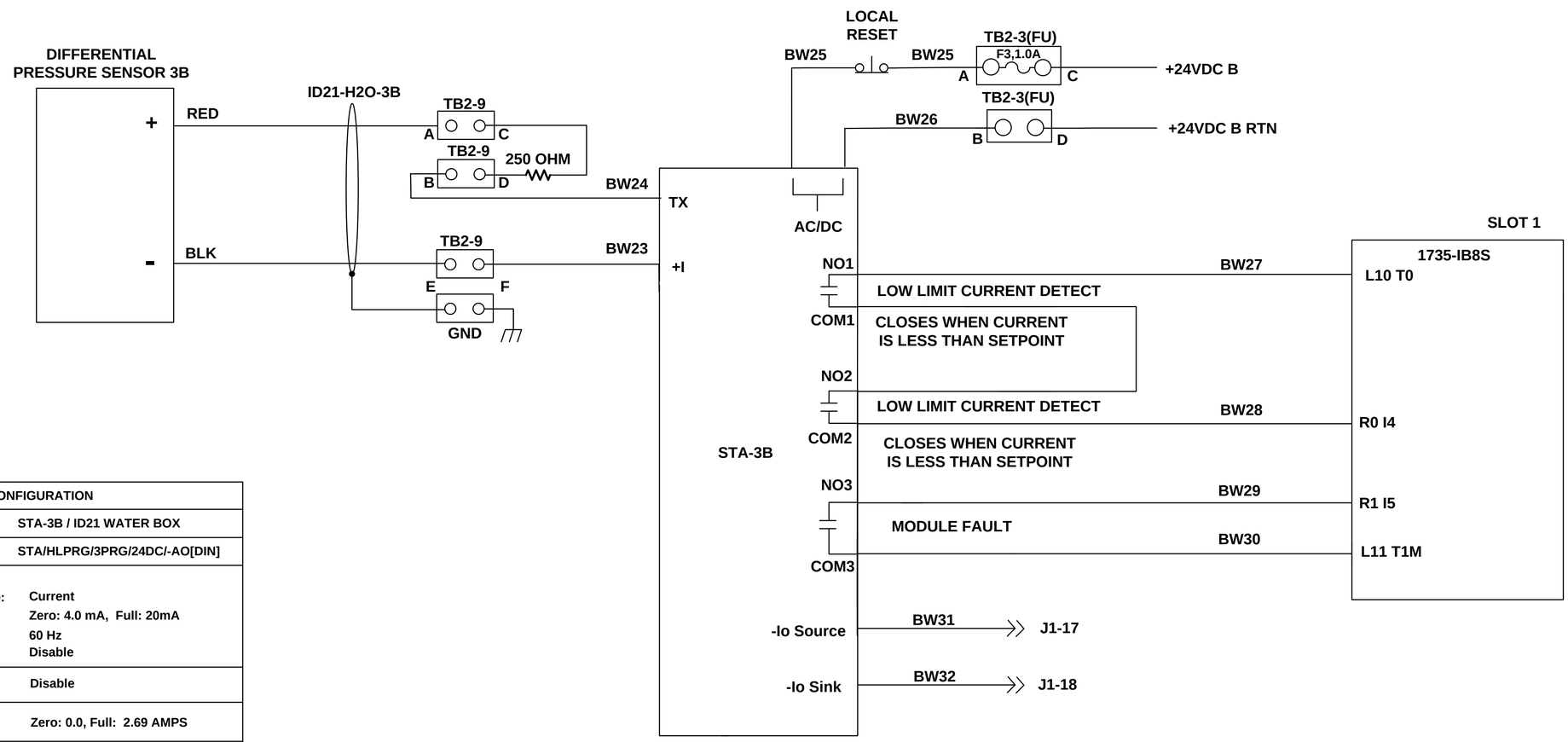

STA DEVICE PARAMETER CONFIGURATION		
DEVICE NAME / LOCATION:	STA-3B / ID21 WATER BOX	
MODEL :	STA/HLPRG/3PRG/24DC/-AO[DIN]	
INPUT		
Measurement Type:	Current	
Input Range:	Zero: 4.0 mA, Full: 20mA	
Filter Settings:	60 Hz	
Broken wire:	Disable	
TRIMMING	Disable	
SCALING	Zero: 0.0, Full: 2.69 AMPS	
DISPLAY		
Display Source:	Process Variable (PV)	
Precision:	Auto	
ALARMS	ALARM 1	ALARM 2
Mode:	Low Trip	Hi Trip
Latching:	Off	Off
Trip point:	1.2 GPM	0.0 GPM
Dead Band:	0.0 GPM	0.0 GPM
Delay:	0 s	0 s
ANALOG OUTPUT		
Mode:	Current	
Fail mode:	Fail Low	
AO Range:	Zero: 4.0, Full: 20.0 mA	
Damping:	Disable (0.0 s)	

B

LT-EL-BL-EI-PPS-1210-92

LT-EL-BL-EI (DRAWING DIRECTORY)	LT-EL-BL-EI-PPS-1210-92 (DRAWING NUMBER)	B (REV)
COMPUTER REPRODUCIBLE	SCALE: N/A	SHEET 8 OF 14

REV	DESCRIPTION	DATE	BY	CHECKED	APP
	SEE SHEET 1				

WATER FLOW INTERLOCK CHANNEL 4 B CHAIN

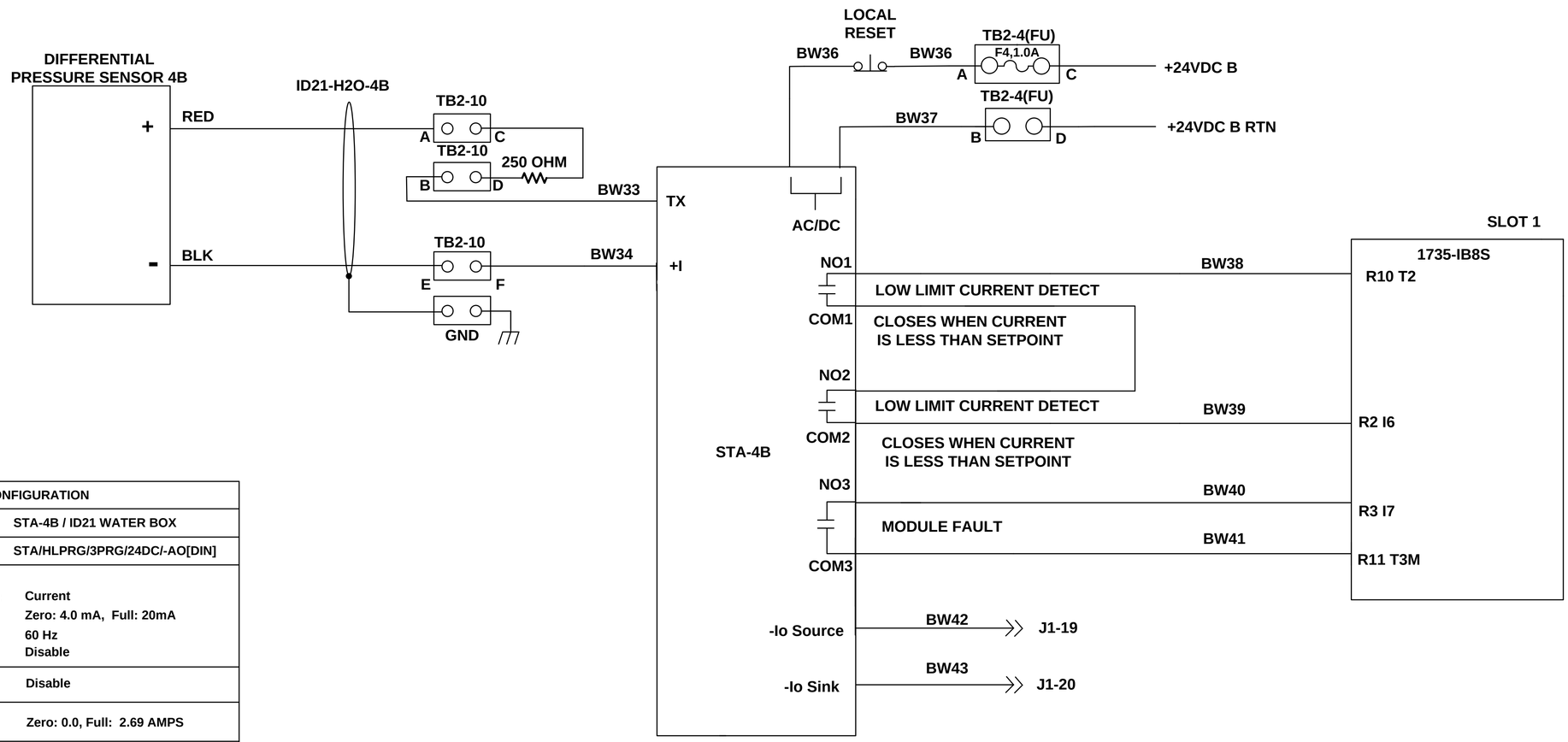

STA DEVICE PARAMETER CONFIGURATION		
DEVICE NAME / LOCATION:	STA-4B / ID21 WATER BOX	
MODEL :	STA/HLPRG/3PRG/24DC/-AO[DIN]	
INPUT		
Measurement Type:	Current	
Input Range:	Zero: 4.0 mA, Full: 20mA	
Filter Settings:	60 Hz	
Broken wire:	Disable	
TRIMMING	Disable	
SCALING	Zero: 0.0, Full: 2.69 AMPS	
DISPLAY		
Display Source:	Process Variable (PV)	
Precision:	Auto	
ALARMS	ALARM 1	ALARM 2
Mode:	Low Trip	Hi Trip
Latching:	Off	Off
Trip point:	0.7 GPM	0.0 GPM
Dead Band:	0.0 GPM	0.0 GPM
Delay:	0 s	0 s
ANALOG OUTPUT		
Mode:	Current	
Fail mode:	Fail Low	
AO Range:	Zero: 4.0, Full: 20.0 mA	
Damping:	Disable (0.0 s)	

B

LT-EL-BL-EI-PPS-1210-92

LT-EL-BL-EI (DRAWING DIRECTORY)	LT-EL-BL-EI-PPS-1210-92 (DRAWING NUMBER)	B (REV)
COMPUTER REPRODUCIBLE	SCALE: N/A	SHEET 9 OF 14

REV	DESCRIPTION	DATE	BY	CHECKED	APP
	SEE SHEET 1				

WATER FLOW INTERLOCK CHANNEL 5 B CHAIN

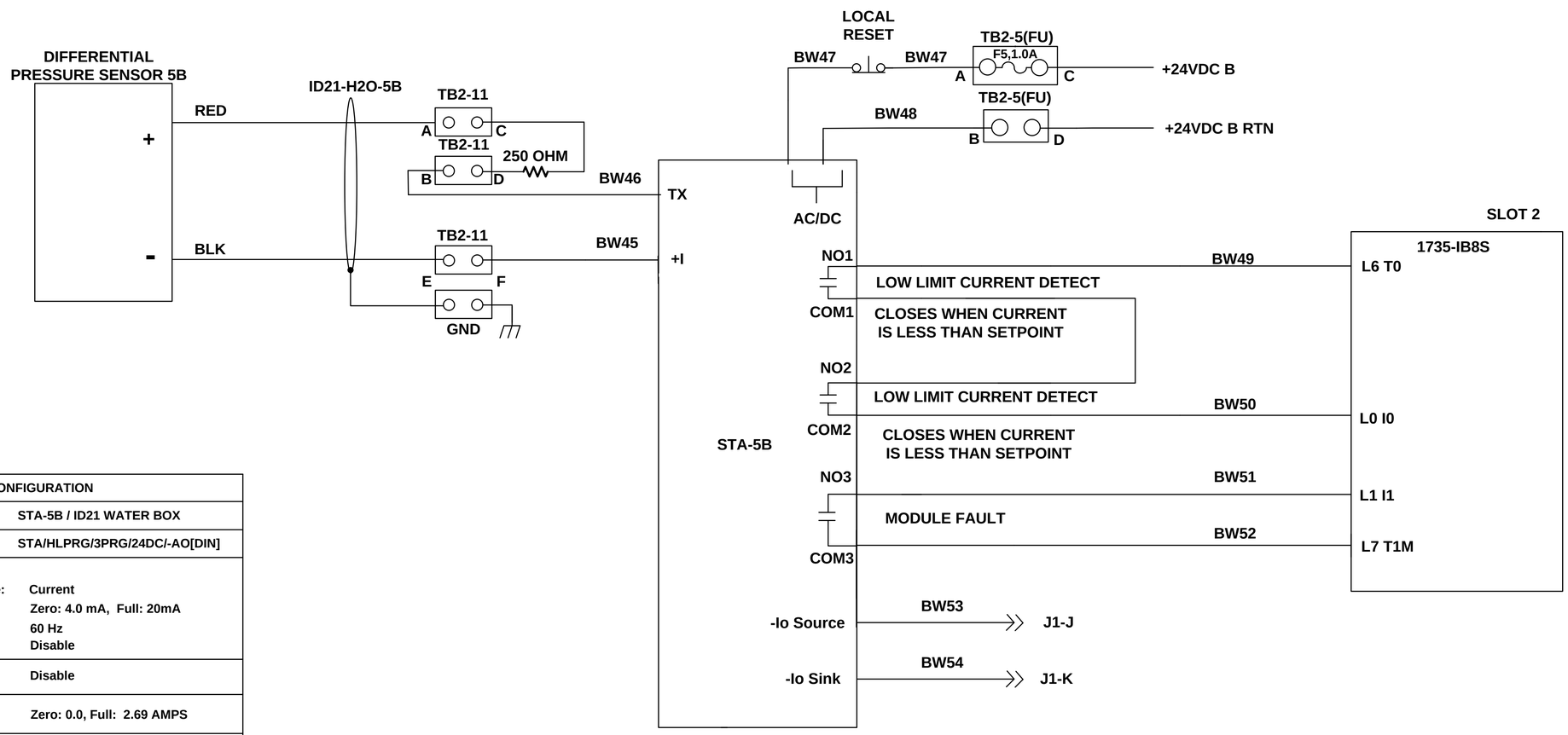

STA DEVICE PARAMETER CONFIGURATION		
DEVICE NAME / LOCATION:	STA-5B / ID21 WATER BOX	
MODEL :	STA/HLPRG/3PRG/24DC/-AO[DIN]	
INPUT		
Measurement Type:	Current	
Input Range:	Zero: 4.0 mA, Full: 20mA	
Filter Settings:	60 Hz	
Broken wire:	Disable	
TRIMMING	Disable	
SCALING	Zero: 0.0, Full: 2.69 AMPS	
DISPLAY		
Display Source:	Process Variable (PV)	
Precision:	Auto	
ALARMS	ALARM 1	ALARM 2
Mode:	Low Trip	Hi Trip
Latching:	Off	Off
Trip point:	0.4 GPM	0.0 GPM
Dead Band:	0.0 GPM	0.0 GPM
Delay:	0 s	0 s
ANALOG OUTPUT		
Mode:	Current	
Fail mode:	Fail Low	
AO Range:	Zero: 4.0, Full: 20.0 mA	
Damping:	Disable (0.0 s)	

B

LT-EL-BL-EI-PPS-1210-92

LT-EL-BL-EI (DRAWING DIRECTORY)	LT-EL-BL-EI-PPS-1210-92 (DRAWING NUMBER)	B (REV)
COMPUTER REPRODUCIBLE	SCALE: N/A	SHEET 10 OF 14

REV	DESCRIPTION	DATE	BY	CHECKED	APP
	SEE SHEET 1				

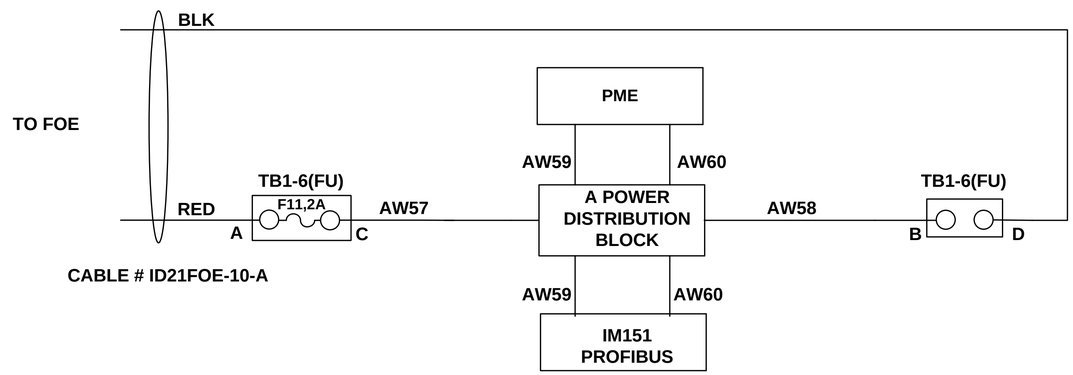

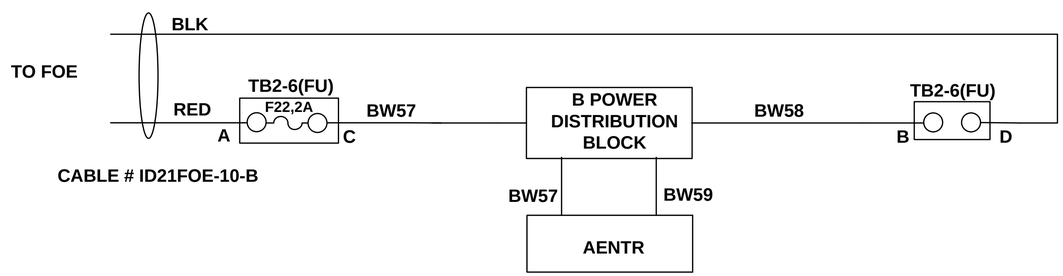

NOTES:

1. TB1-1 TO TB1-6 ARE FUSES AND JUMPED TOGETHER.
2. TB2-1 TO TB2-6 ARE FUSES AND JUMPED TOGETHER.

LT-EL-BL-EI-PPS-1210-92

LT-EL-BL-EI (DRAWING DIRECTORY)	LT-EL-BL-EI-PPS-1210-92 (DRAWING NUMBER)	B (REV)
COMPUTER REPRODUCIBLE	SCALE: N/A	SHEET 11 OF 14

REV	DESCRIPTION	DATE	BY	CHECKED	APP
	SEE SHEET 1				

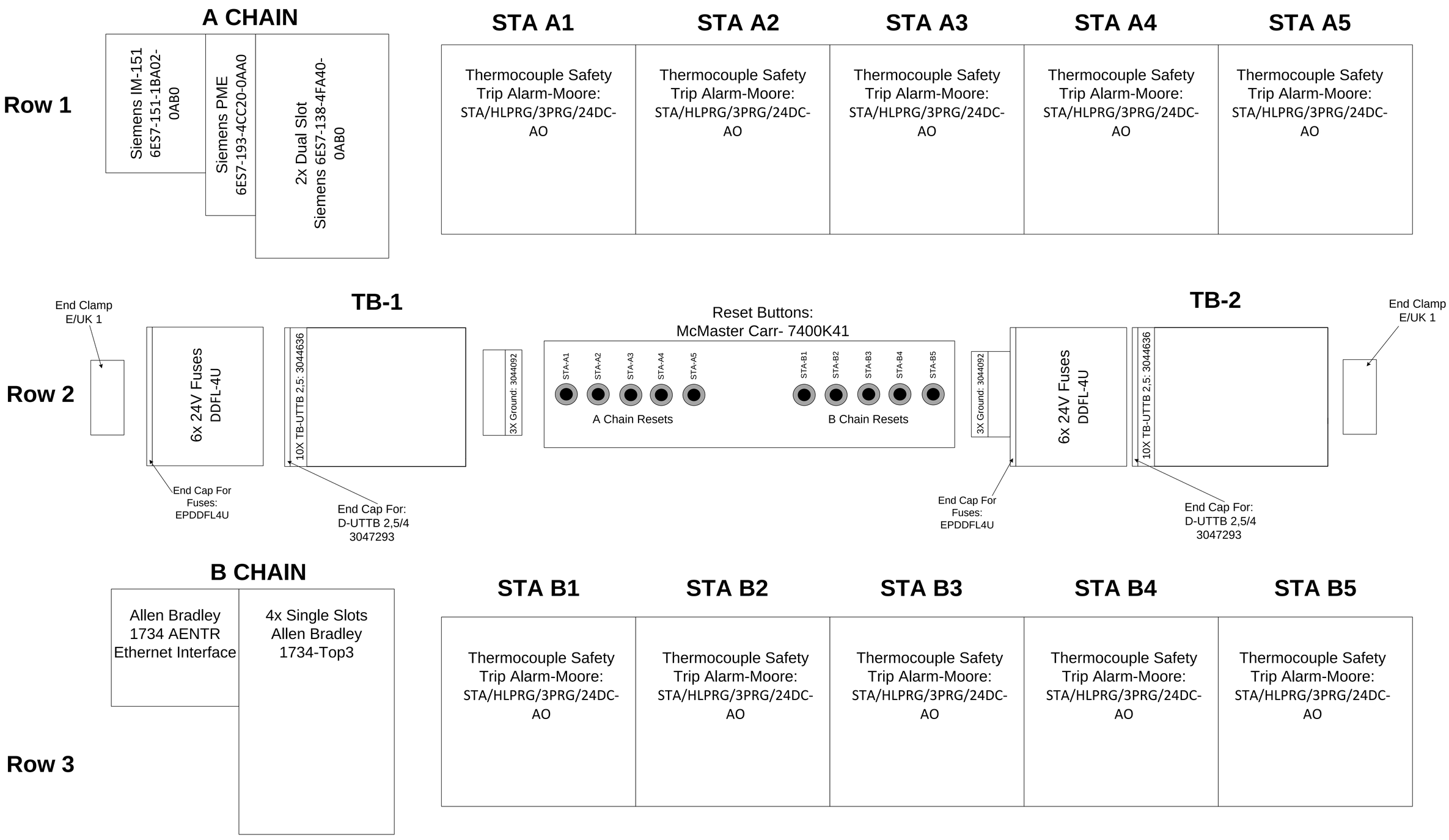

LT-EL-BL-EI	LT-EL-BL-EI-PPS-1210-92	B
DRAWING DIRECTORY	DRAWING NUMBER	REV

COMPUTER REPRODUCIBLE | SCALE: N/A | SHEET 12 OF 14

LT-EL-BL-EI-PPS-1210-92

REV	DESCRIPTION	DATE	BY	CHECKED	APP
	SEE SHEET 1				

ROW 1:						
SLOT	MODULE	SOCKET	DESCRIPTION	VENDOR		
	6ES7-151-1BA02-0AB0	N/A	IM 151	SIEMENS		
1	6ES7-138-4CA50-0AB0	6ES7-193-4CC20-0AA0	POWER MODULE PM-E	SIEMENS		
2	6ES7-138-4FA04-0AB0	6ES7-193-4CF40-0AA0	4/8 FDI 8 SAFE IN	SIEMENS		
3	6ES7-138-4FA04-0AB0	6ES7-193-4CF40-0AA0	4/8 FDI 8 SAFE IN	SIEMENS		
STA A1	STA/HLPRG/3PRG/24DC-AO [DIN]	N/A	THERMOCOUPLE SAFETY TRIP ALARM	MOORE		
STA A2	STA/HLPRG/3PRG/24DC-AO [DIN]	N/A	THERMOCOUPLE SAFETY TRIP ALARM	MOORE		
STA A3	STA/HLPRG/3PRG/24DC-AO [DIN]	N/A	THERMOCOUPLE SAFETY TRIP ALARM	MOORE		
STA A4	STA/HLPRG/3PRG/24DC-AO [DIN]	N/A	THERMOCOUPLE SAFETY TRIP ALARM	MOORE		
STA A5	STA/HLPRG/3PRG/24DC-AO [DIN]	N/A	THERMOCOUPLE SAFETY TRIP ALARM	MOORE		
ROW 2:						
TB1	[6]	1>6 [8]	[3]	[1]	[2]	
BUTTON	COMPONENT		DESCRIPTION	VENDOR		
1	7400K41		POWER DISTRIBUTION BLOCK A	MCMASTER		
2	7400K41		POWER DISTRIBUTION BLOCK A	MCMASTER		
3	7400K41		POWER DISTRIBUTION BLOCK A	MCMASTER		
4	7400K41		POWER DISTRIBUTION BLOCK A	MCMASTER		
5	7400K41		POWER DISTRIBUTION BLOCK A	MCMASTER		
6	7400K41		POWER DISTRIBUTION BLOCK B	MCMASTER		
7	7400K41		POWER DISTRIBUTION BLOCK B	MCMASTER		
8	7400K41		POWER DISTRIBUTION BLOCK B	MCMASTER		
9	7400K41		POWER DISTRIBUTION BLOCK B	MCMASTER		
10	7400K41		POWER DISTRIBUTION BLOCK B	MCMASTER		
TB2	[[6]	[8]	[3]	[1]	[2]	
ROW 3:						
SLOT	MODULE	SOCKET	DESCRIPTION	VENDOR		
1	1734-AENTR	N/A	24V DC EHTERNET ADAPTER	AB		
2	1734-IB8S	1734-TOP 3	AB INPUT F 8 SAFETY IN	AB		
3	1734-IB8S	1734-TOP 3	AB INPUT F 8 SAFETY IN	AB		
STA B1	STA/HLPRG/3PRG/24DC-AO [DIN]	N/A	THERMOCOUPLE SAFETY TRIP ALARM	MOORE		
STA B2	STA/HLPRG/3PRG/24DC-AO [DIN]	N/A	THERMOCOUPLE SAFETY TRIP ALARM	MOORE		
STA B3	STA/HLPRG/3PRG/24DC-AO [DIN]	N/A	THERMOCOUPLE SAFETY TRIP ALARM	MOORE		
STA B4	STA/HLPRG/3PRG/24DC-AO [DIN]	N/A	THERMOCOUPLE SAFETY TRIP ALARM	MOORE		
STA B5	STA/HLPRG/3PRG/24DC-AO [DIN]	N/A	THERMOCOUPLE SAFETY TRIP ALARM	MOORE		

LT-EL-BL-EI-PPS-1210-92

REV	DESCRIPTION	DATE	BY	CHECKED	APP
	SEE SHEET 1				

Paired part numbers are color coordinated.

	[1]
TYPE	
Double-level terminal block - UTTB 2,5	
GROUND	
End cover - D-UTTB 2,5/4	
Spacer plate - DP-UTTB 2,5/4	[2]
End clamp - E/UK 1	
End Plate; Term Blk; DIN Rail; Gray;	
DIN Rail Terminal Blocks UT 2 5/4-QUATTRO	
24V FUSES	
Feed-through terminal block - UT 2,5	
End cover - D-UT 2,5/10	[3]
End cover - D-UT 2,5/4-QUATTRO	
Feed-through terminal block - UT 4	
Feed-through terminal block - UDK 4	
KONNECT IT 3 CIRCUIT TERMINAL BLOCK	
3 CIRCUIT TERMINAL BLOCK COVER	
99321 ALTECH DIODE TERMINAL BLOCK	[4]
ALTECH DIODE TB END COVER	
Diode TB - UTTB 2,5 O-UL/UR-UL	
	[5]
	[6]

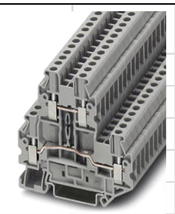

[7]	
[8]	
[9]	
[10]	
[11]	
[12]	

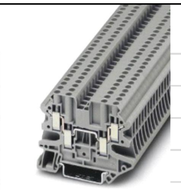
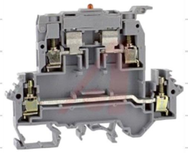

[13]	
[14]	
[15]	
[16]	
[17]	
[18]	

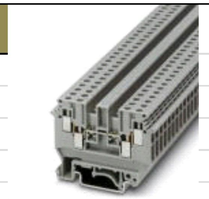

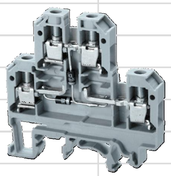

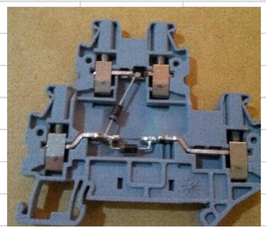

LT-EL-BL-EI DRAWING DIRECTORY	LT-EL-BL-EI-PPS-1210-92 DRAWING NUMBER	B REV
COMPUTER REPRODUCIBLE	SCALE: N/A	SHEET 14 OF 14

LT-EL-BL-EI-PPS-1210-92

REV	DESCRIPTION	DATE	BY	CHECKED	APP
A	INITIAL RELEASE	5/20/2016	SEJ	JM	SB

21-ID FOE SEARCH LOGIC

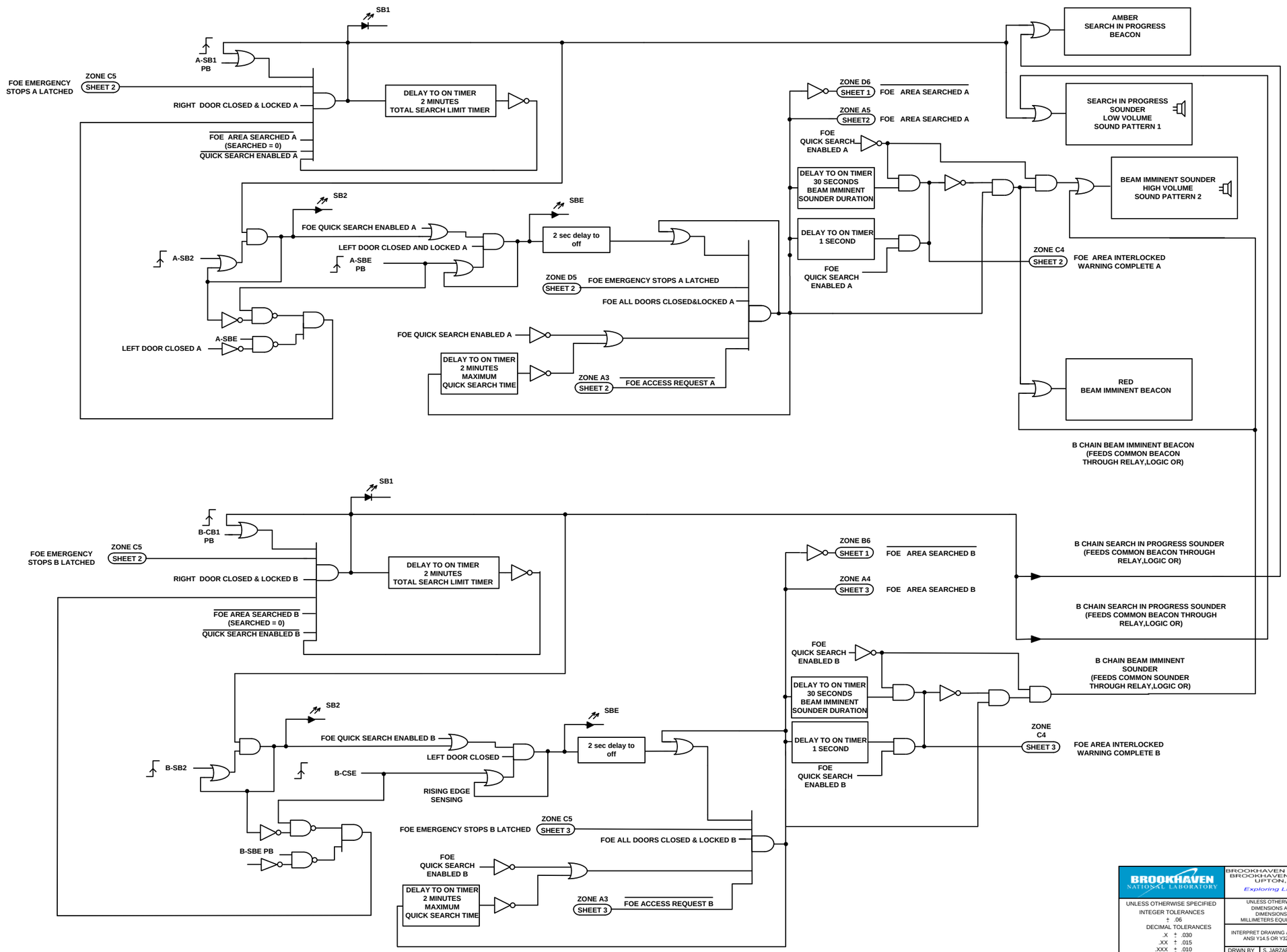

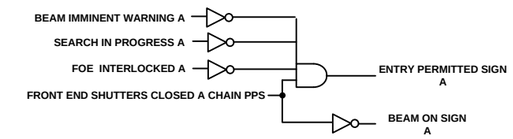

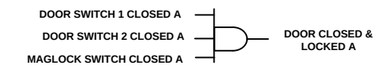

LOCATED ON FOE BOX, FUNCTIONS FOR ALL ENCLOSURES

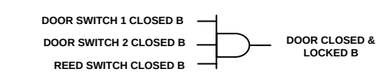

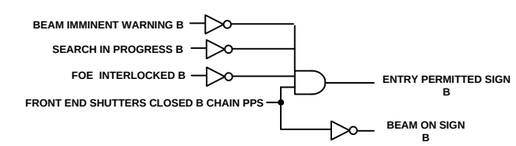

21-ID FOE LOGIC

LT-EL-BL-EI-PPS-1210-96

BROOKHAVEN NATIONAL LABORATORY

BROOKHAVEN NATIONAL LABORATORY
BROOKHAVEN SCIENCE ASSOCIATES
UPTON, NEW YORK 11973
Exploring Life's Mysteries, Protecting its Future

NSLSII NATIONAL SYNCHROTRON LIGHT SOURCE II

UNLESS OTHERWISE SPECIFIED
INTEGER TOLERANCES ± .06
DECIMAL TOLERANCES
.X ± .030
.XX ± .015
.XXX ± .010
ANGULAR TOLERANCE ± 0.5°
UNSPECIFIED RADII .02 MAX
125 FINISH
BREAK SHARP CORNERS AND EDGES
MAX .03 MIN .005

UNLESS OTHERWISE SPECIFIED DIMENSIONS ARE IN INCHES
DIMENSIONS IN [*.**] ARE MILLIMETERS EQUIV. FOR REF. ONLY

ESH&Q RISK LEVEL A-1

INTERPRET DRAWING AS PER ANSI Y14.5 OR Y32.2

		DATE	OUTSTANDING ECN'S
DRWN BY	S. JARZABKOWSKI	10/03/2014	
CHK BY	J. MALLEY		
ENG APP	S. BUDA		
SUPV APP	G. GANETIS		
QA APP	E. CHESWICK		
ESH APP	B. LEE		

WIRING DIAGRAM
21-ID FOE SEARCH LOGIC

JOB NUMBER	USED ON DWG. NO.

LT-EL-BL-EI DRAWING DIRECTORY | LT-EL-BL-EI-PPS-1210-96 DRAWING NUMBER | A REV

COMPUTER REPRODUCIBLE | SCALE: N/A | SHEET 1 OF 38

REV	DESCRIPTION	DATE	BY	CHECKED	APP
	SEE SHEET 1				

21-ID FOE A CHAIN LOGIC

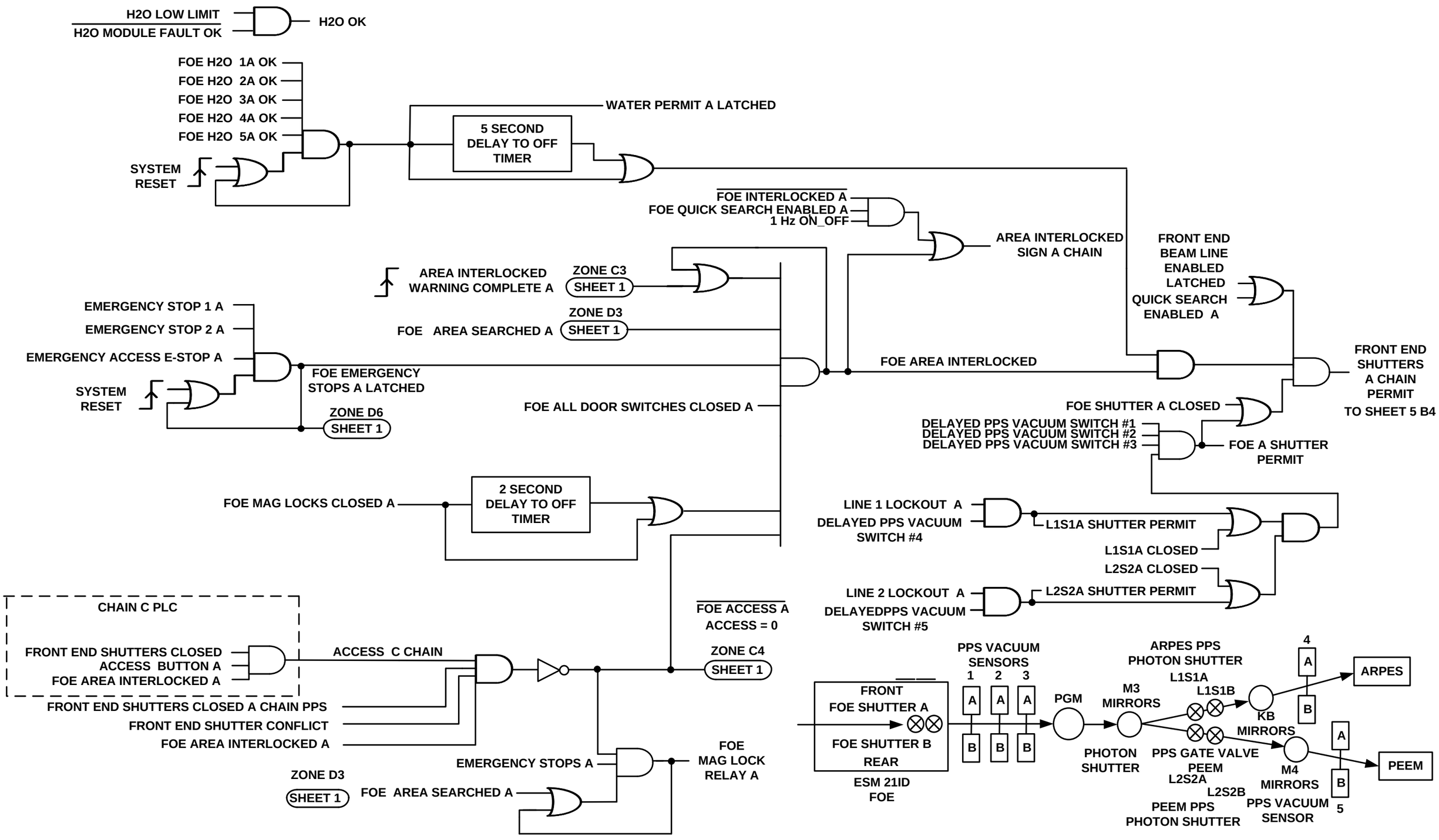

LT-EL-BL-EI DRAWING DIRECTORY	LT-EL-BL-EI-PPS-1210-96 DRAWING NUMBER	A REV
COMPUTER REPRODUCIBLE	SCALE: N/A	SHEET 2 OF 10

LT-EL-BL-EI-PPS-1210-96

REV	DESCRIPTION	DATE	BY	CHECKED	APP
	SEE SHEET 1				

21-ID FOE B CHAIN LOGIC

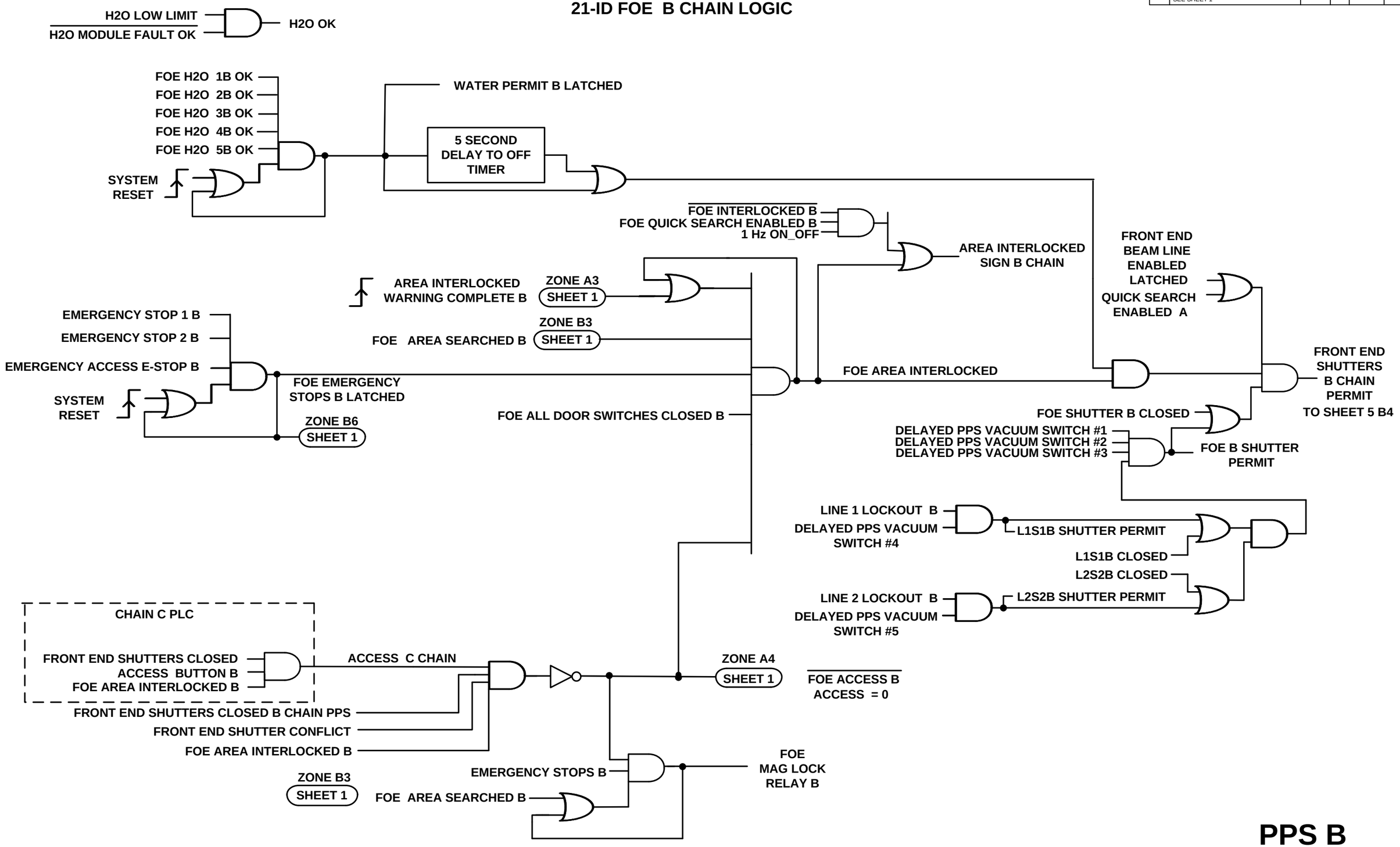

PPS B

LT-EL-BL-EI DRAWING DIRECTORY	LT-EL-BL-EI-PPS-1210-96 DRAWING NUMBER	A REV
COMPUTER REPRODUCIBLE	SCALE: N/A	SHEET 3 OF 10

LT-EL-BL-EI-PPS-1210-96

REV	DESCRIPTION	DATE	BY	CHECKED	APP
	SEE SHEET 1				

21-ID FOE

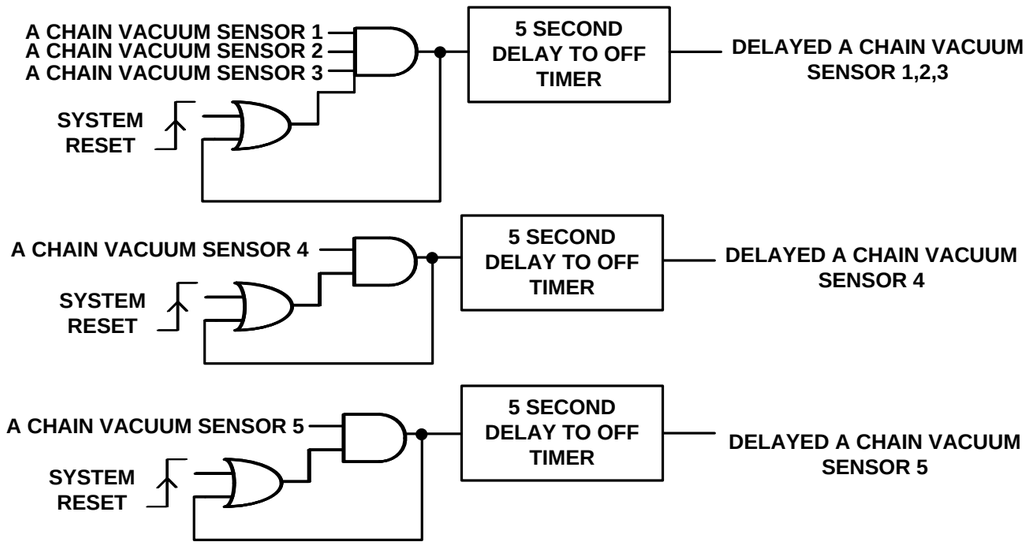

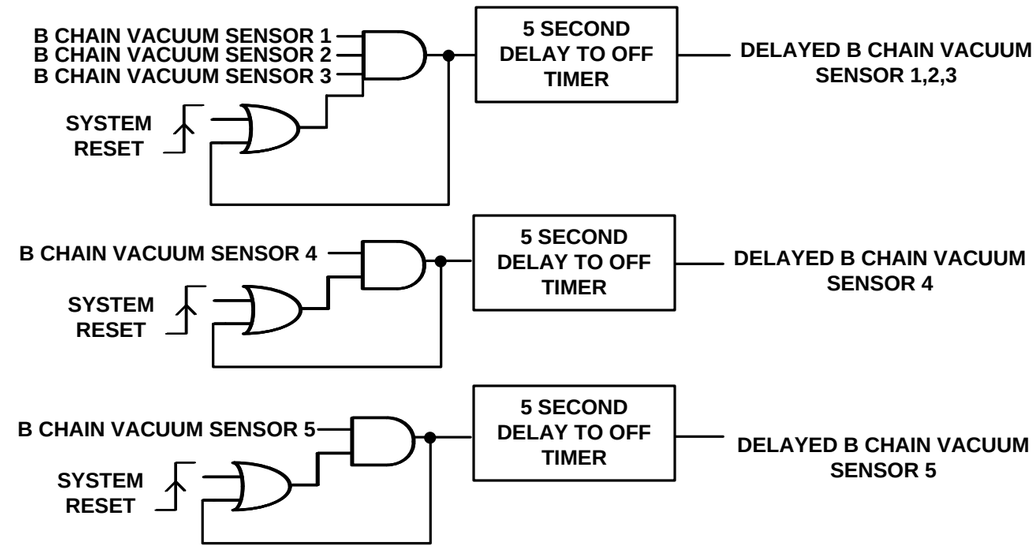

LT-EL-BL-EI-PPS-1210-96

LT-EL-BL-EI (DRAWING DIRECTORY)	LT-EL-BL-EI-PPS-1210-96 (DRAWING NUMBER)	A (REV)
COMPUTER REPRODUCIBLE	SCALE: N/A	SHEET 4 OF 10

REV	DESCRIPTION	DATE	BY	CHECKED	APP
	SEE SHEET 1				

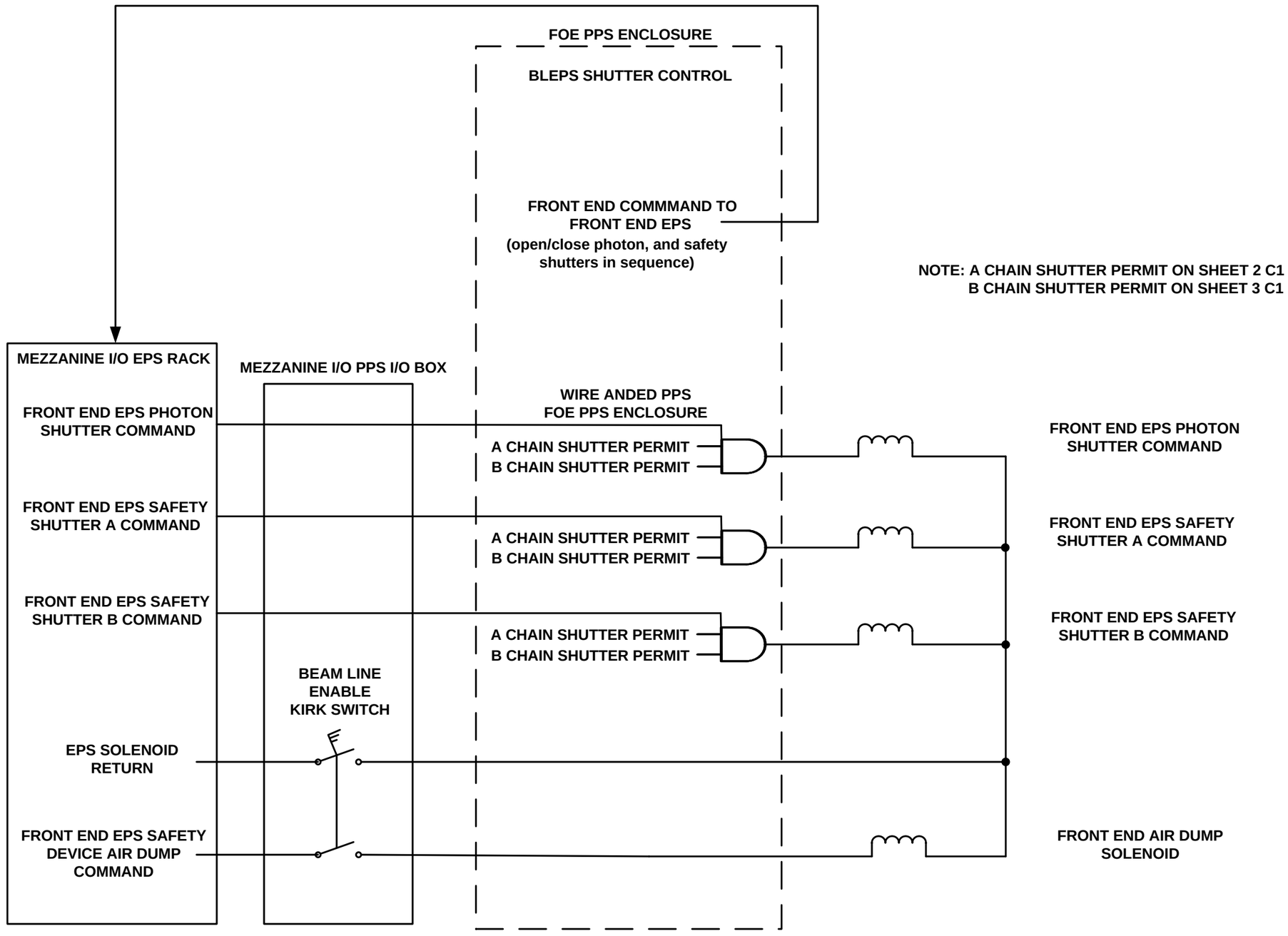

LT-EL-BL-EI DRAWING DIRECTORY	LT-EL-BL-EI-PPS-1210-96 DRAWING NUMBER	A REV
COMPUTER REPRODUCIBLE	SCALE: N/A	SHEET 5 OF 10

LT-EL-BL-EI-PPS-1210-96

REV	DESCRIPTION	DATE	BY	CHECKED	APP
	SEE SHEET 1				

C CHAIN SHUTTER CONTROL
FRONT END SHUTTERS

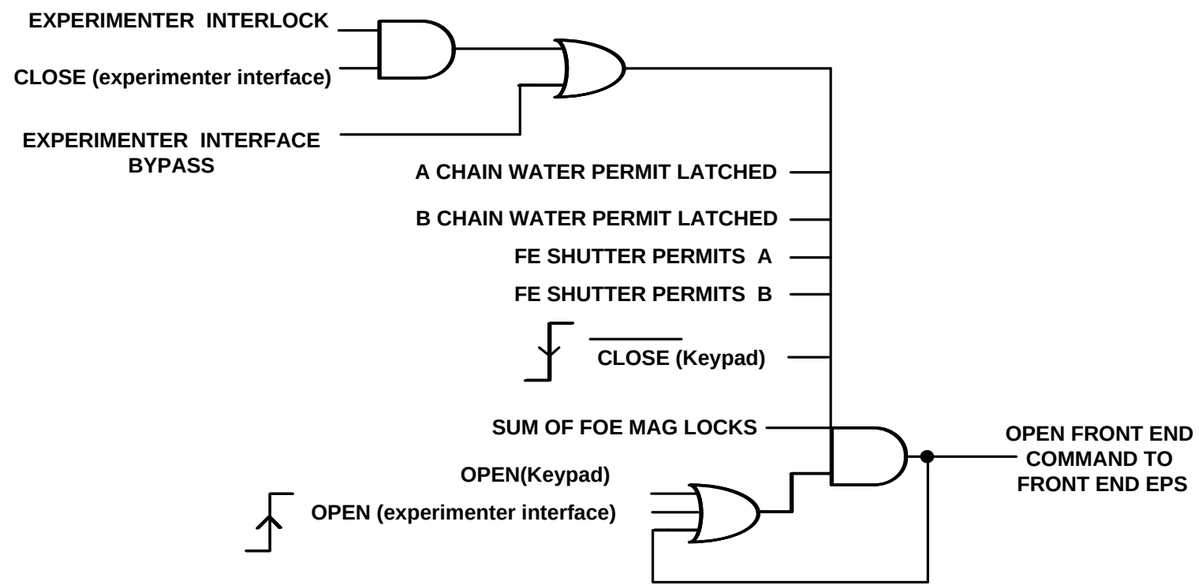

LT-EL-BL-EI DRAWING DIRECTORY	LT-EL-BL-EI-PPS-1210-96 DRAWING NUMBER	A REV
COMPUTER REPRODUCIBLE	SCALE: N/A	SHEET 6 OF 10

LT-EL-BL-EI-PPS-1210-96

REV	DESCRIPTION	DATE	BY	CHECKED	APP
	SEE SHEET 1				

C CHAIN SHUTTER CONTROL

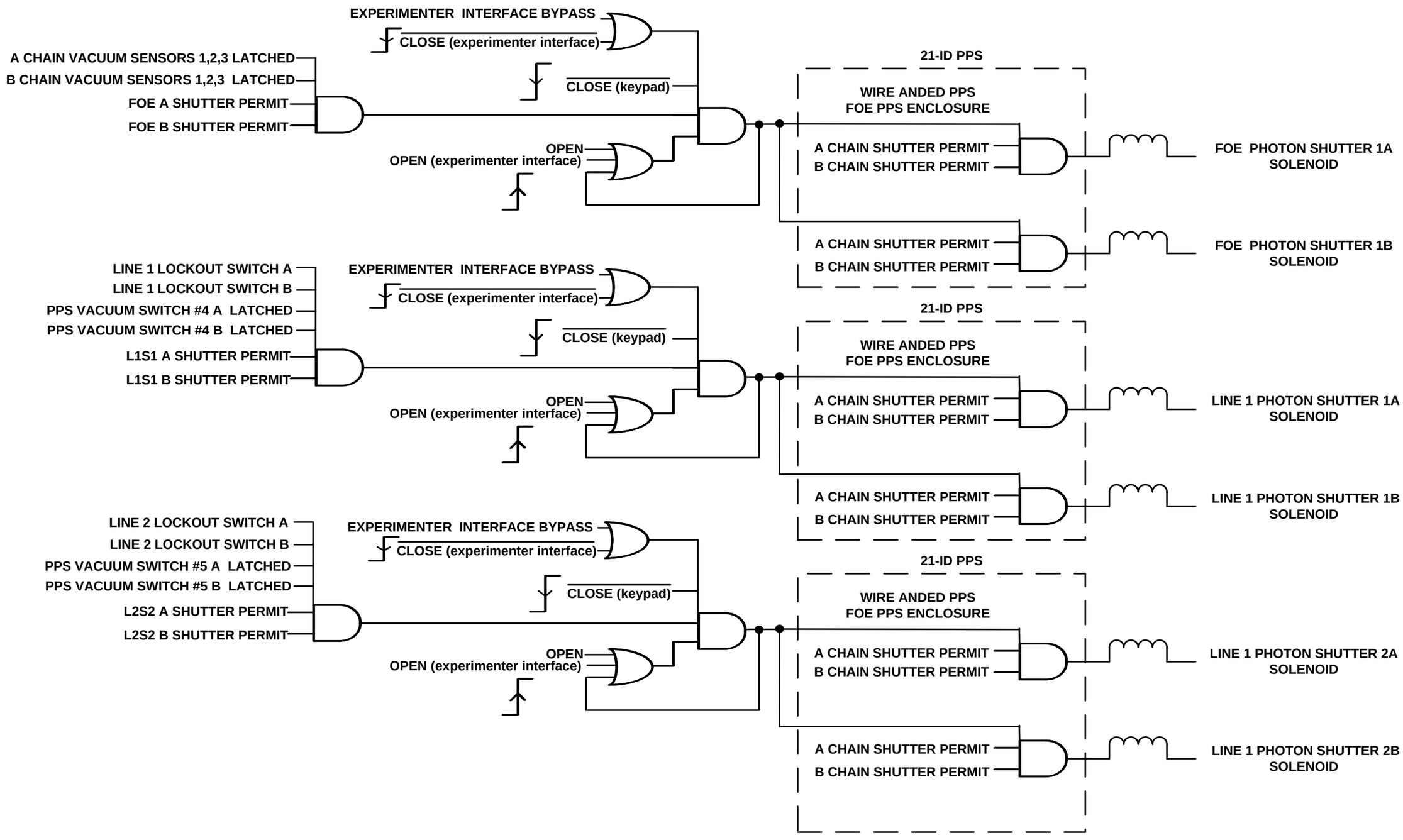

EPS

LT-EL-BL-EI-PPS-1210-96

LT-EL-BL-EI (DRAWING DIRECTORY)	LT-EL-BL-EI-PPS-1210-96 (DRAWING NUMBER)	A (REV)
COMPUTER REPRODUCIBLE	SCALE: N/A	SHEET 7 OF 10

REV	DESCRIPTION	DATE	BY	CHECKED	APP
	SEE SHEET 1				

C CHAIN DOOR CONTROL FOE

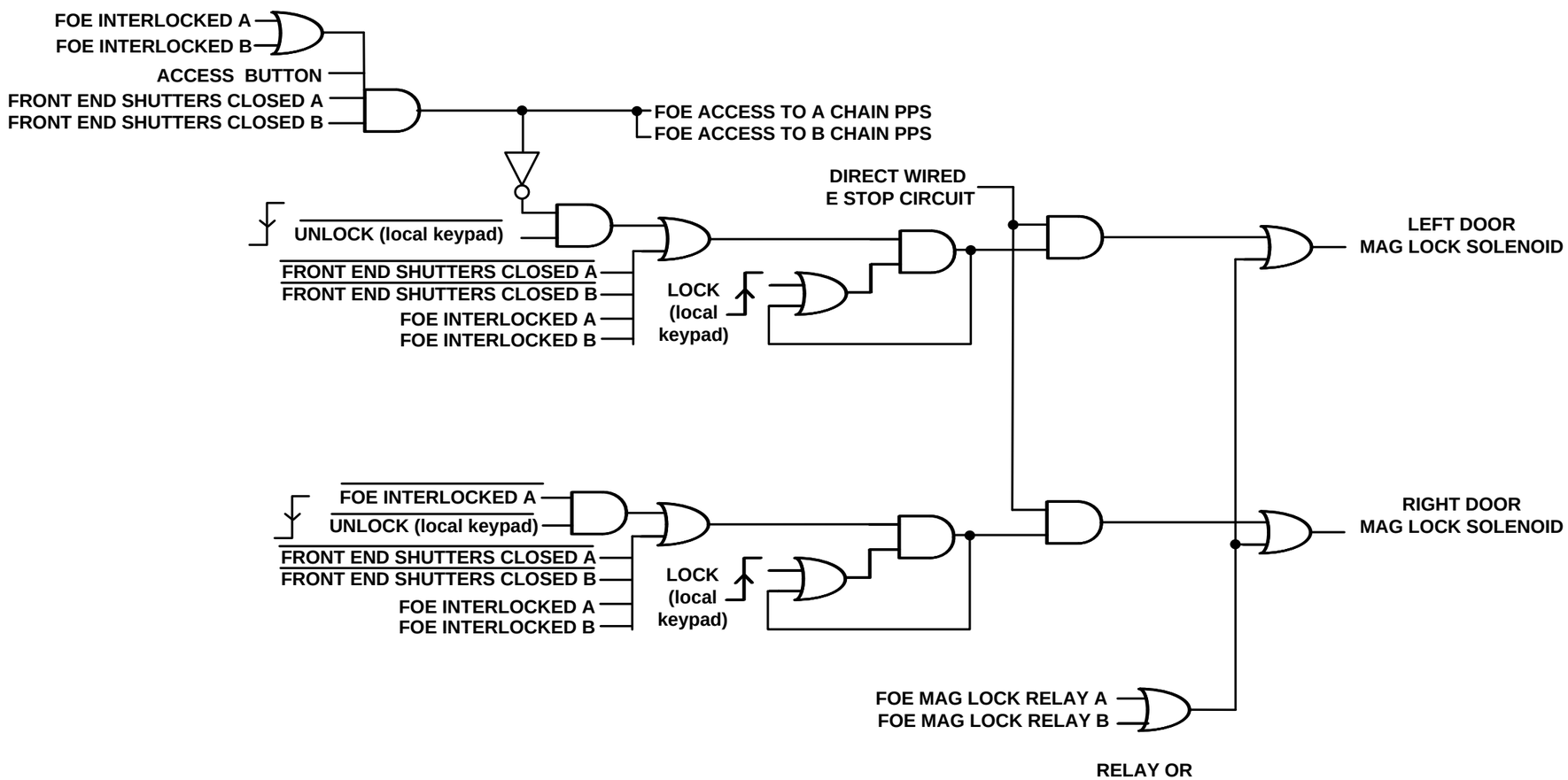

EPS

LT-EL-BL-EI	LT-EL-BL-EI-PPS-1210-96	A
DRAWING DIRECTORY	DRAWING NUMBER	REV

COMPUTER REPRODUCIBLE | SCALE: N/A | SHEET 8 OF 10

LT-EL-BL-EI-PPS-1210-96

REV	DESCRIPTION	DATE	BY	CHECKED	APP
	SEE SHEET 1				

FAULTS AND ALARMS A CHAIN

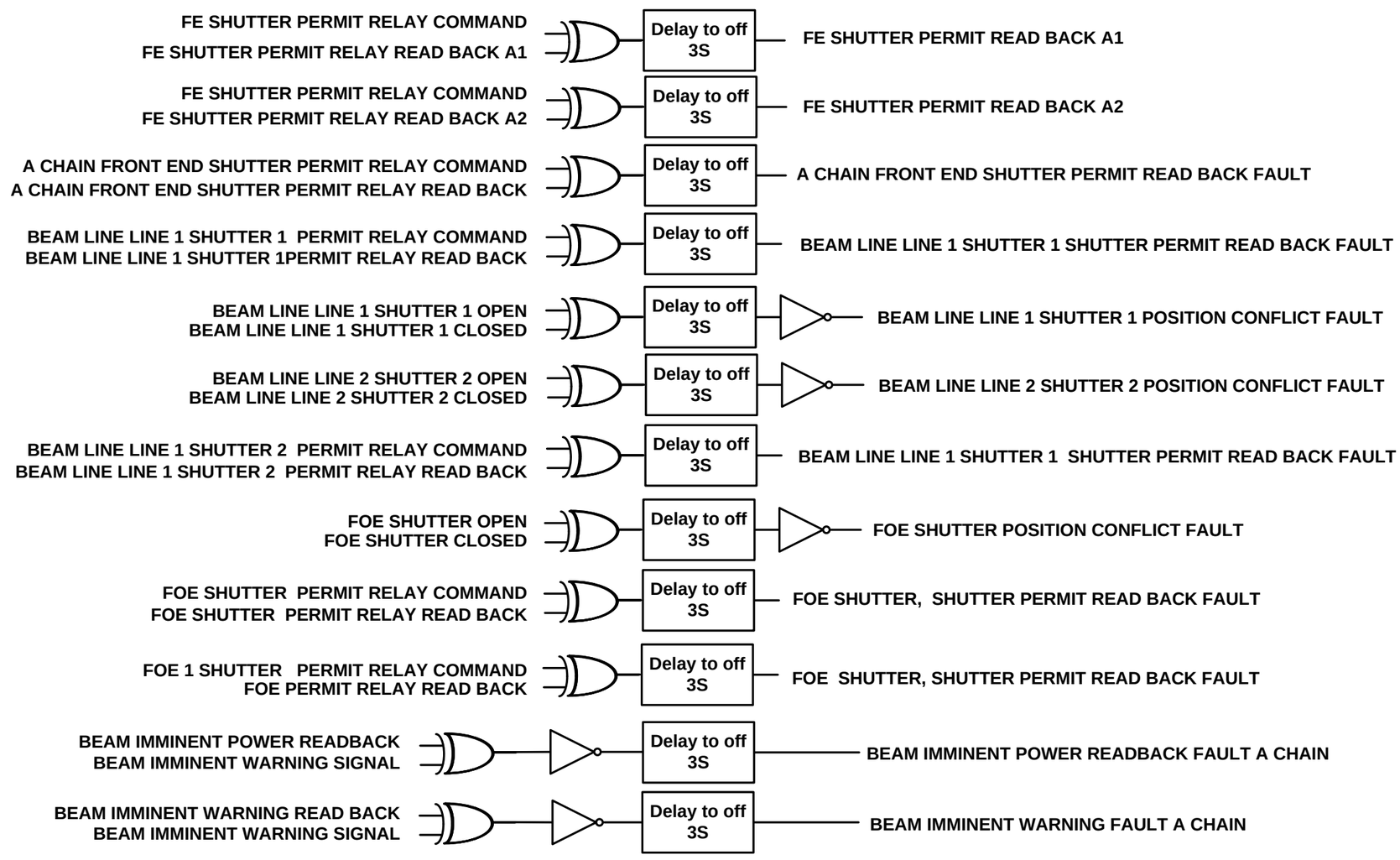

A CHAIN PROXIMITY SENSOR FAULT = DIRECT FROM SENSOR MODULE

A CHAIN HARDWARE FAULT = GENERATED FROM SYSTEM FAULT DATA

A CHAIN BEAM LINE FAULTS ARE SENT TO THE CONTROL ROOM ONLY WHEN BEAMLINE IS ENABLED AT FRONT END

LT-EL-BL-EI-PPS-1210-96

LT-EL-BL-EI (DRAWING DIRECTORY)	LT-EL-BL-EI-PPS-1210-96 (DRAWING NUMBER)	A (REV)
COMPUTER REPRODUCIBLE	SCALE: N/A	SHEET 9 OF 10

REV	DESCRIPTION	DATE	BY	CHECKED	APP
	SEE SHEET 1				

FAULTS AND ALARMS B CHAIN

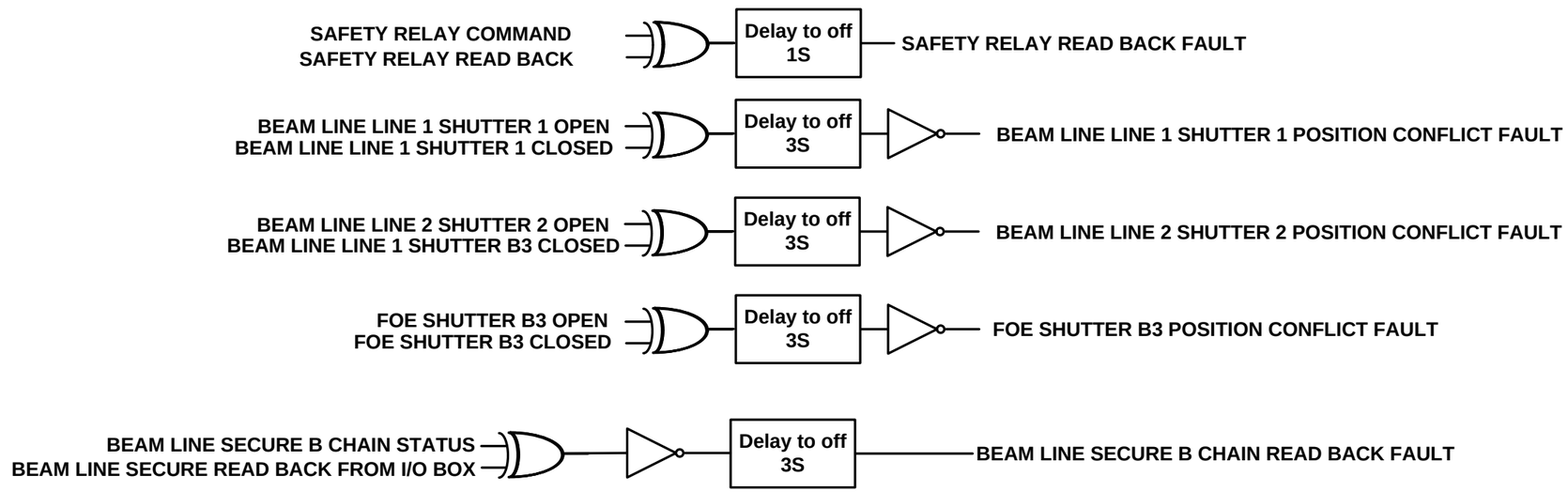

B CHAIN SAFETY SWITCH FAULTS ARE GENERATED BY FUNCTION BLOCKS, DOORS, CABLE LABYRINTHS
B CHAIN PROXIMITY SENSOR FAULT = DIRECT FROM SENSOR MODULE
B CHAIN HARDWARE FAULT = GENERATED FROM SYSTEM FAULT DATA
B CHAIN BEAM LINE FAULTS ARE SENT TO THE CONTROL ROOM ONLY WHEN BEAMLINE IS ENABLED AT FRONT END

LT-EL-BL-EI-PPS-1210-96

LT-EL-BL-EI (DRAWING DIRECTORY)	LT-EL-BL-EI-PPS-1210-96 (DRAWING NUMBER)	A (REV)
COMPUTER REPRODUCIBLE	SCALE: N/A	SHEET 10 OF 10

REV	DESCRIPTION	BY	DATE	CHK	APP
A	INITIAL RELEASE	CG	12/30/13	JM	SB
B	REVISED PER LT-ECN-014-803	CG	3-20-14	JM	SB
C	REVISED PER LT-ECN-014-824	SJ	07/07/2014	JM	SB
D	REVISED PER LT-ECN-016-1480	SEJ	05/03/2016	JM	SB
E	REVISED PER LT-ECN-016-1521	SEJ	06/15/2016	JM	SB

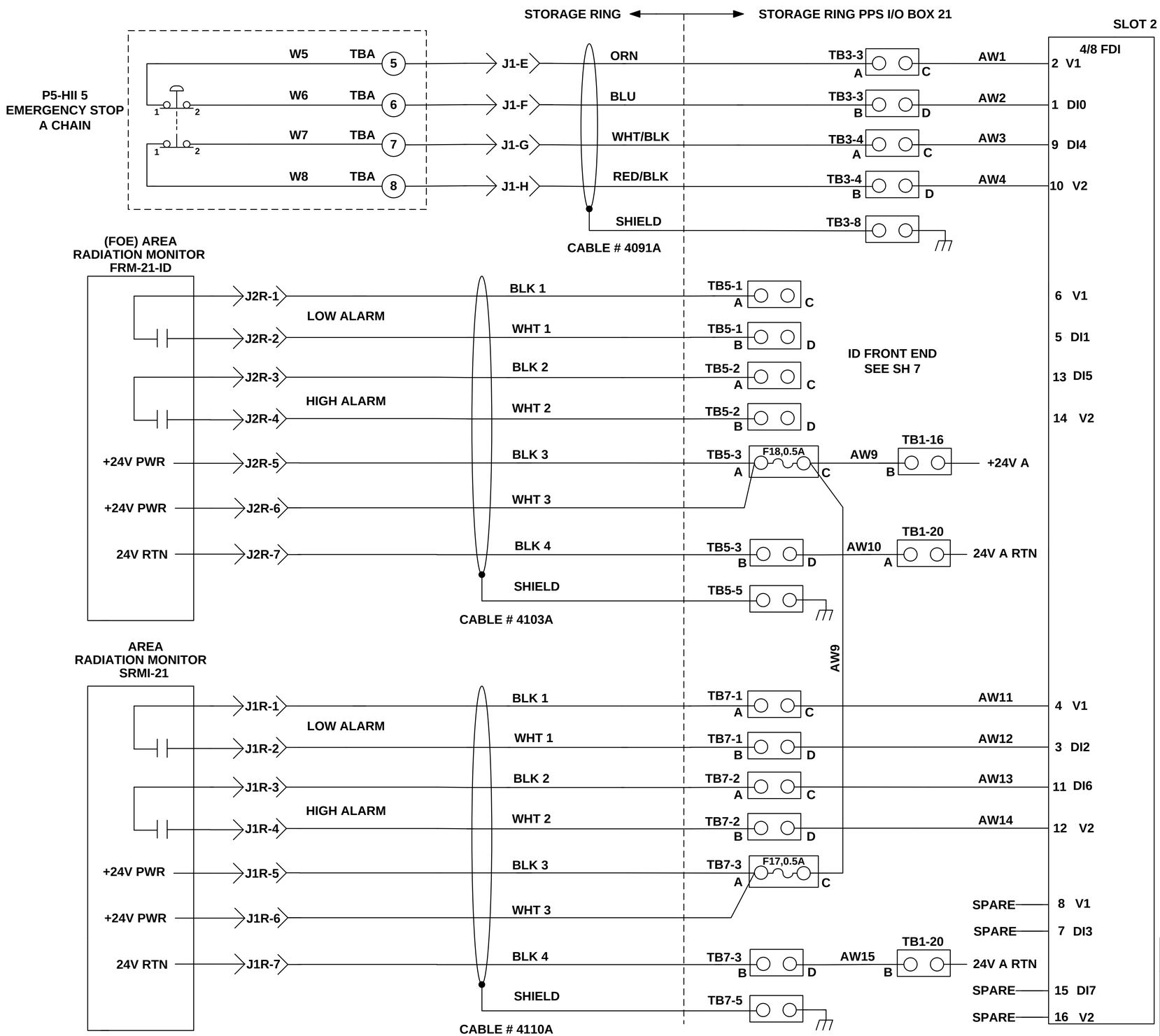

ID BEAMLINE INSTALLED ☒

BM BEAMLINE INSTALLED ☐

SHUTTER OVERTEMPERATURE CIRCUITRY NOT USED

COMMON GROUP

A

SEE SEPARATE WIRE RUNNING LIST — RL LT-EL-SR-EI-PPS-0221-90

SEE SEPARATE PARTS LIST — PL LT-EL-SR-EI-PPS-0221-90

LT-EL-SR-EI-PPS-0221-90

BROOKHAVEN NATIONAL LABORATORY

BROOKHAVEN NATIONAL LABORATORY
BROOKHAVEN SCIENCE ASSOCIATES
UPTON, NEW YORK 11973
Exploring Life's Mysteries, Protecting its Future

NSLS II NATIONAL SYNCHROTRON LIGHT SOURCE II

UNLESS OTHERWISE SPECIFIED
INTEGER TOLERANCES ± .06
DECIMAL TOLERANCES
.X ± .030
.XX ± .015
.XXX ± .010
ANGULAR TOLERANCE ± 0.5°
UNSPECIFIED RADII .02 MAX
125 BREAK SHARP CORNERS AND EDGES
FINISH MAX .03 MIN .005

UNLESS OTHERWISE SPECIFIED DIMENSIONS ARE IN INCHES DIMENSIONS IN [ ] ARE MILLIMETERS EQUIV. FOR REF. ONLY
INTERPRET DRAWING AS PER ANSI Y14.5 OR Y32.2
ESH&Q RISK LEVEL A-1
OUTSTANDING ECN'S

		DATE
DRWN BY	C.GUARINO	12-30-13
CHK BY	J.MALLEY	02/07/14
ENG APP	S.BUDA	02/16/14
SUPV APP	G.GANETIS	02/11/14
QA APP	E.CHESWICK	02/07/14
ESH APP	B.LEE	02/10/14

WIRING DIAGRAM
STORAGE RING PPS I/O BOX 21
TYPE 2 A CHAIN & B CHAIN

LT-EL-SR-EI (DRAWING DIRECTORY) | LT-EL-SR-EI-PPS-0221-90 (DRAWING NUMBER) | E (REV)

WBS #1.03.06.01.03 | SCALE: N/A | SHEET 1 OF 48

JOB NUMBER | USED ON DWG. NO.

REV	DESCRIPTION	BY	DATE	CHK	APP
	SEE SHEET 1				

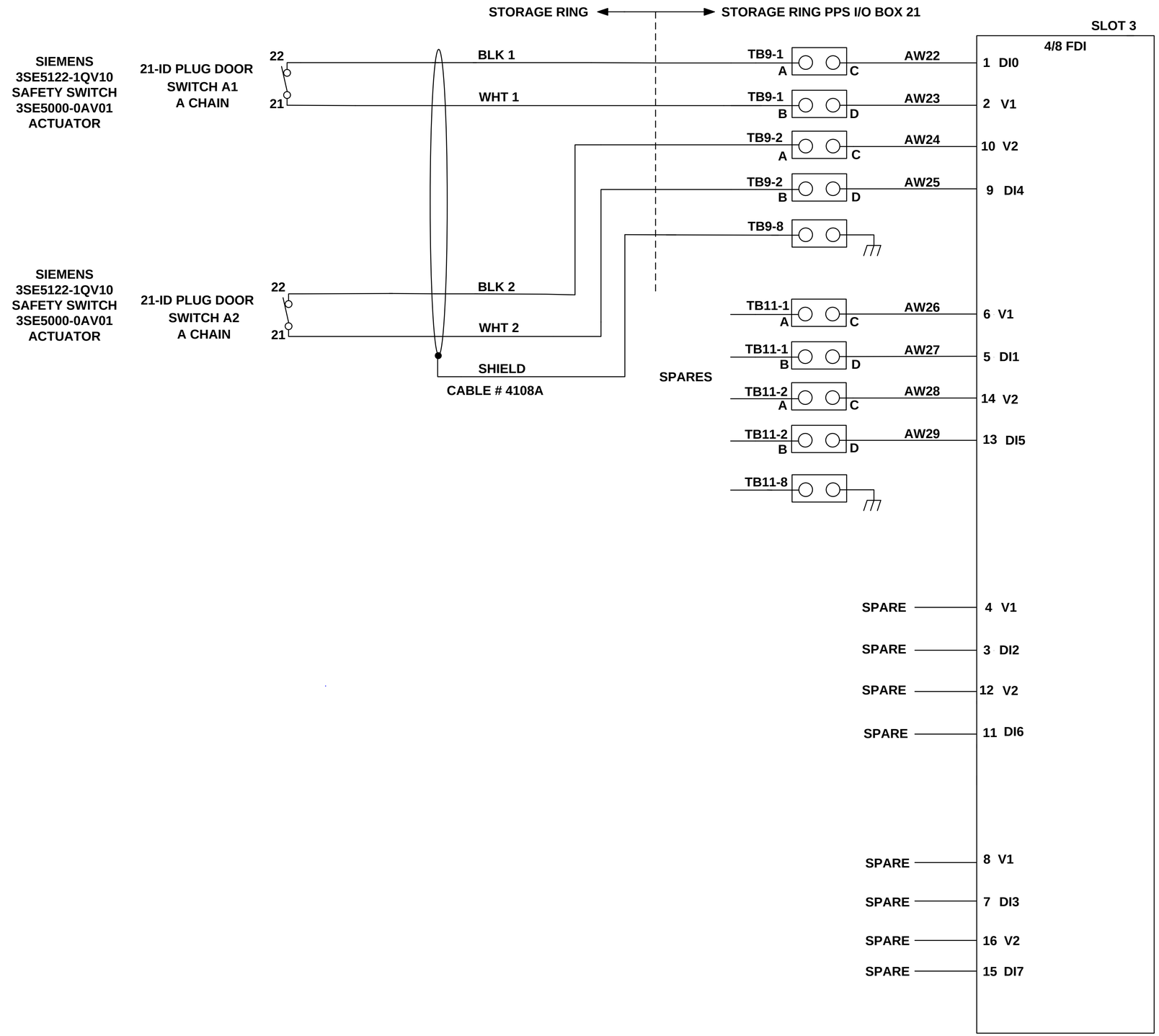

LT-EL-SR-EI-PPS-0221-90

COMMON GROUP

A

LT-EL-SR-EI	LT-EL-SR-EI-PPS-0221-90	E
DRAWING DIRECTORY	DRAWING NUMBER	REV

COMPUTER REPRODUCIBLE | SCALE: N/A | SHEET 2 OF 48

REV	DESCRIPTION	BY	DATE	CHK	APP
	SEE SHEET 1				

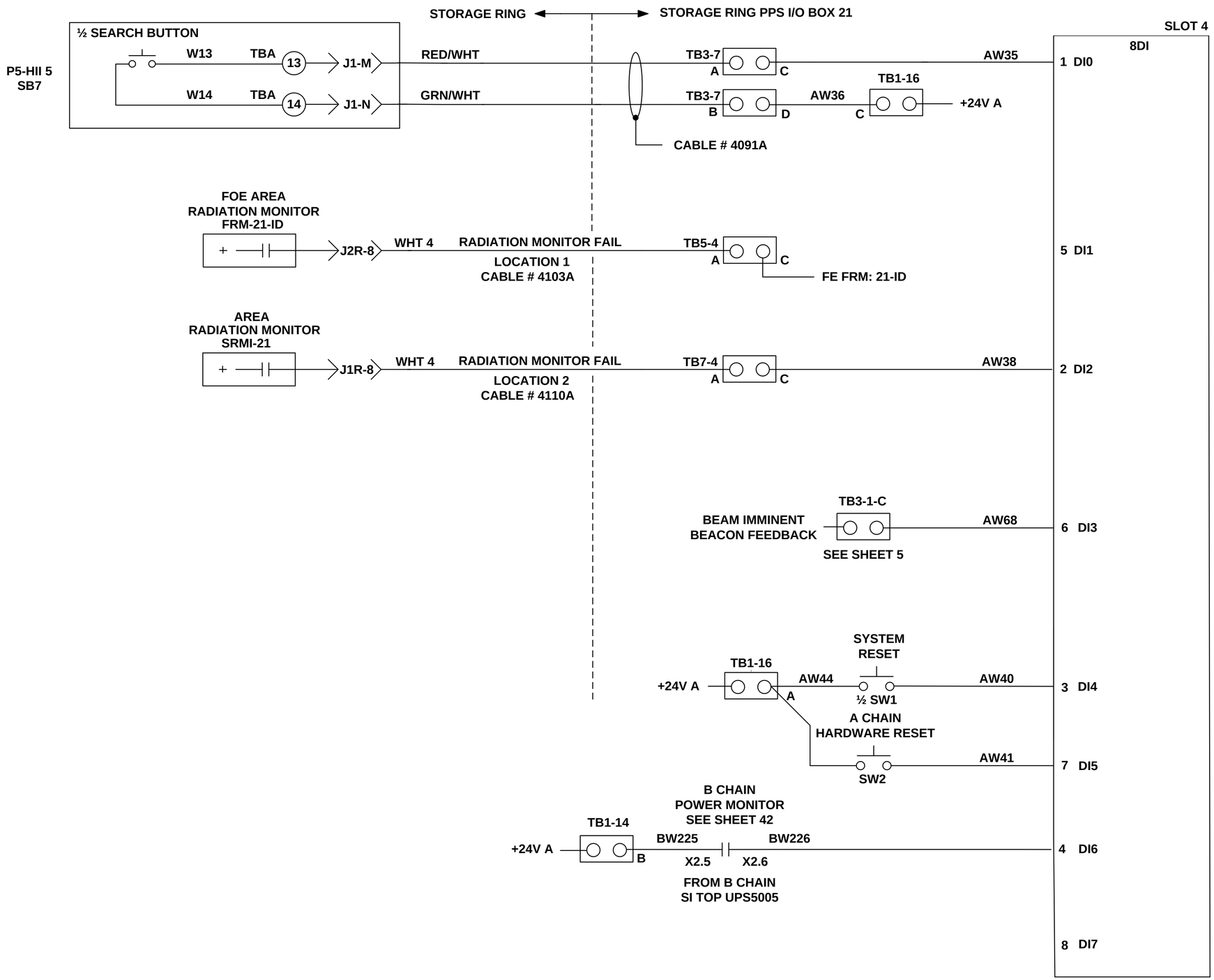

LT-EL-SR-EI-PPS-0221-90

COMMON GROUP

A

LT-EL-SR-EI	LT-EL-SR-EI-PPS-0221-90	E
DRAWING DIRECTORY	DRAWING NUMBER	REV
COMPUTER REPRODUCIBLE	SCALE: N/A	SHEET 3 OF 48

REV	DESCRIPTION	BY	DATE	CHK	APP
	SEE SHEET 1				

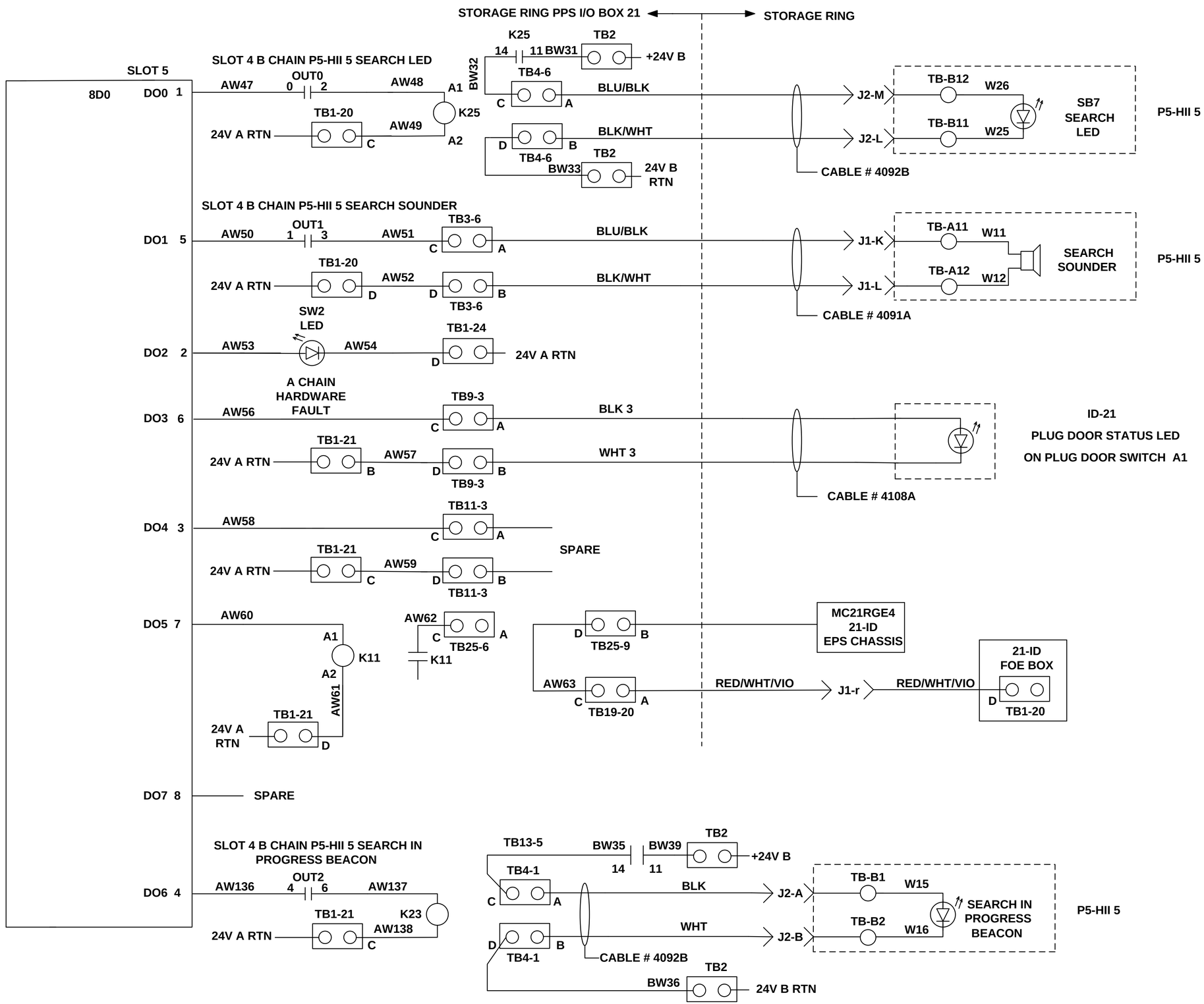

COMMON GROUP

A

LT-EL-SR-EI	LT-EL-SR-EI-PPS-0221-90	E
DRAWING DIRECTORY	DRAWING NUMBER	REV

COMPUTER REPRODUCIBLE | SCALE: N/A | SHEET 4 OF 48

LT-EL-SR-EI-PPS-0221-90

REV	DESCRIPTION	BY	DATE	CHK	APP
	SEE SHEET 1				

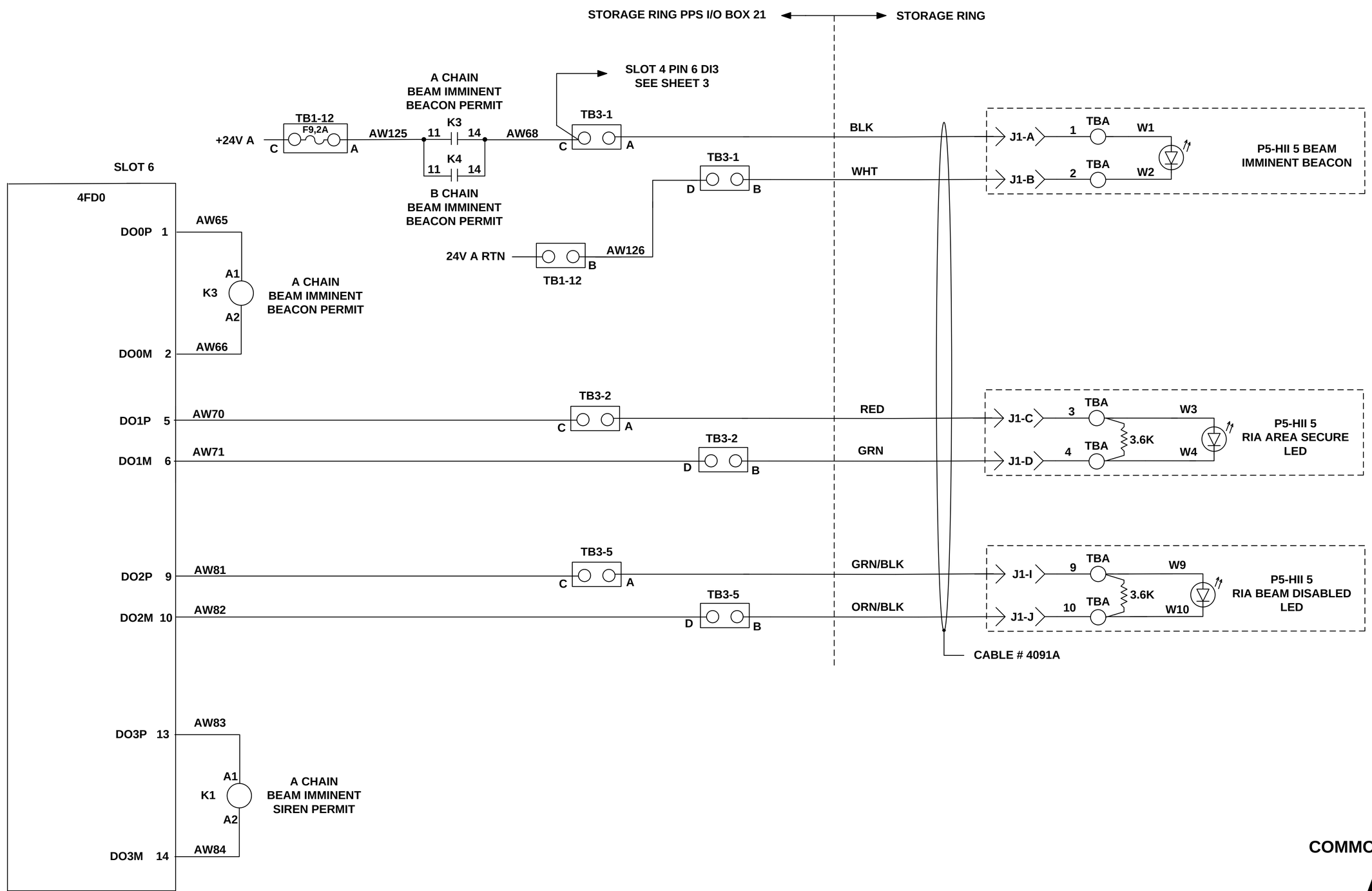

COMMON GROUP

A

LT-EL-SR-EI	LT-EL-SR-EI-PPS-0221-90	E
DRAWING DIRECTORY	DRAWING NUMBER	REV

COMPUTER REPRODUCIBLE | SCALE: N/A | SHEET 5 OF 48

LT-EL-SR-EI-PPS-0221-90

REV	DESCRIPTION	BY	DATE	CHK	APP
	SEE SHEET 1				

LT-EL-SR-EI-PPS-0221-90

SHEET LEFT BLANK
FOR FUTURE DATA

LT-EL-SR-EI	LT-EL-SR-EI-PPS-0221-90	E
DRAWING DIRECTORY	DRAWING NUMBER	REV
COMPUTER REPRODUCIBLE	SCALE: N/A	SHEET 6 OF 48

REV	DESCRIPTION	BY	DATE	CHK	APP
	SEE SHEET 1				

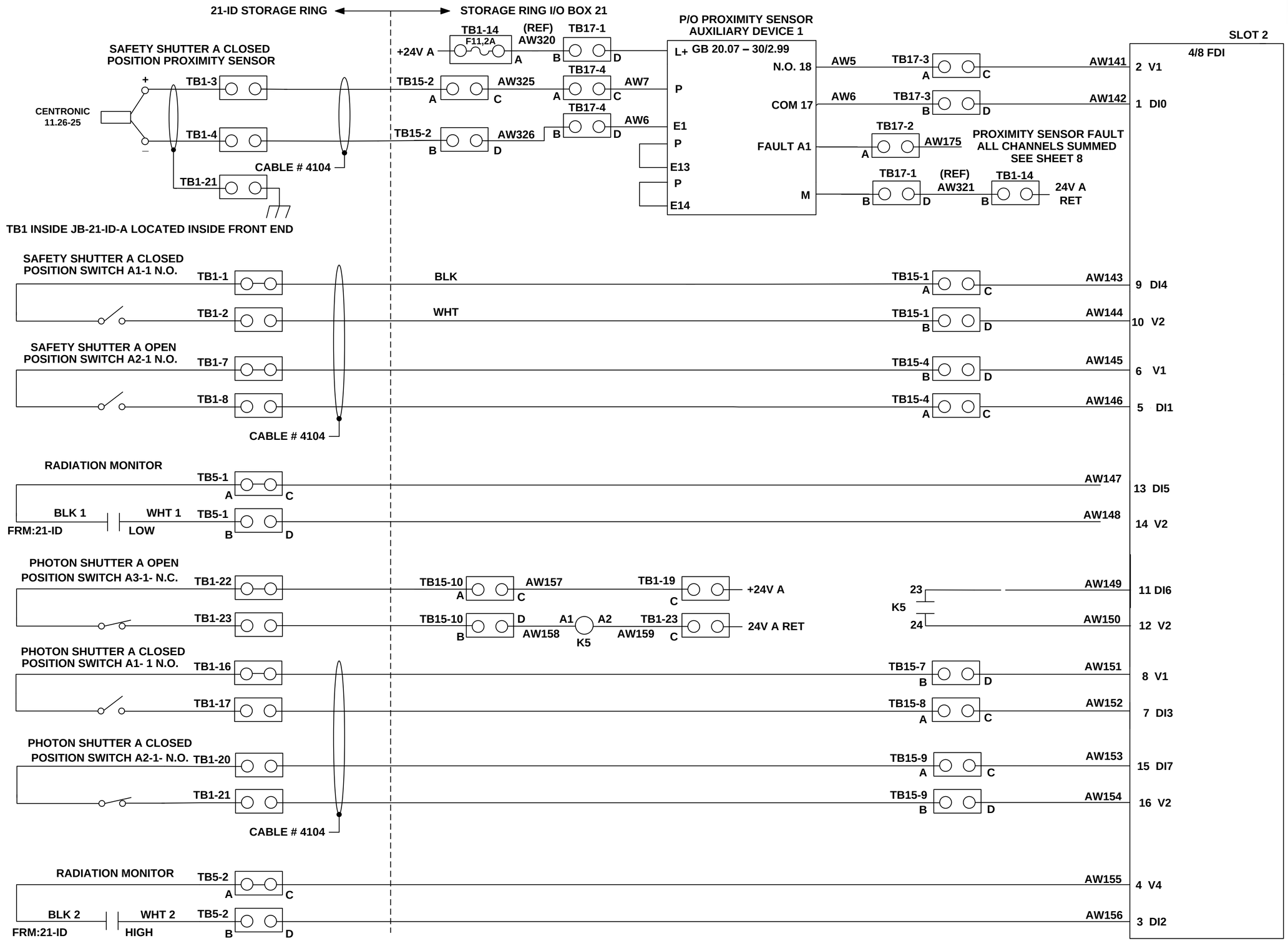

LT-EL-SR-EI-PPS-0221-90

ID BEAMLINE GROUP

A

21-ID

LT-EL-SR-EI (DRAWING DIRECTORY)	LT-EL-SR-EI-PPS-0221-90 (DRAWING NUMBER)	E (REV)
COMPUTER REPRODUCIBLE	SCALE: N/A	SHEET 7 OF 48

REV	DESCRIPTION	BY	DATE	CHK	APP
	SEE SHEET 1				

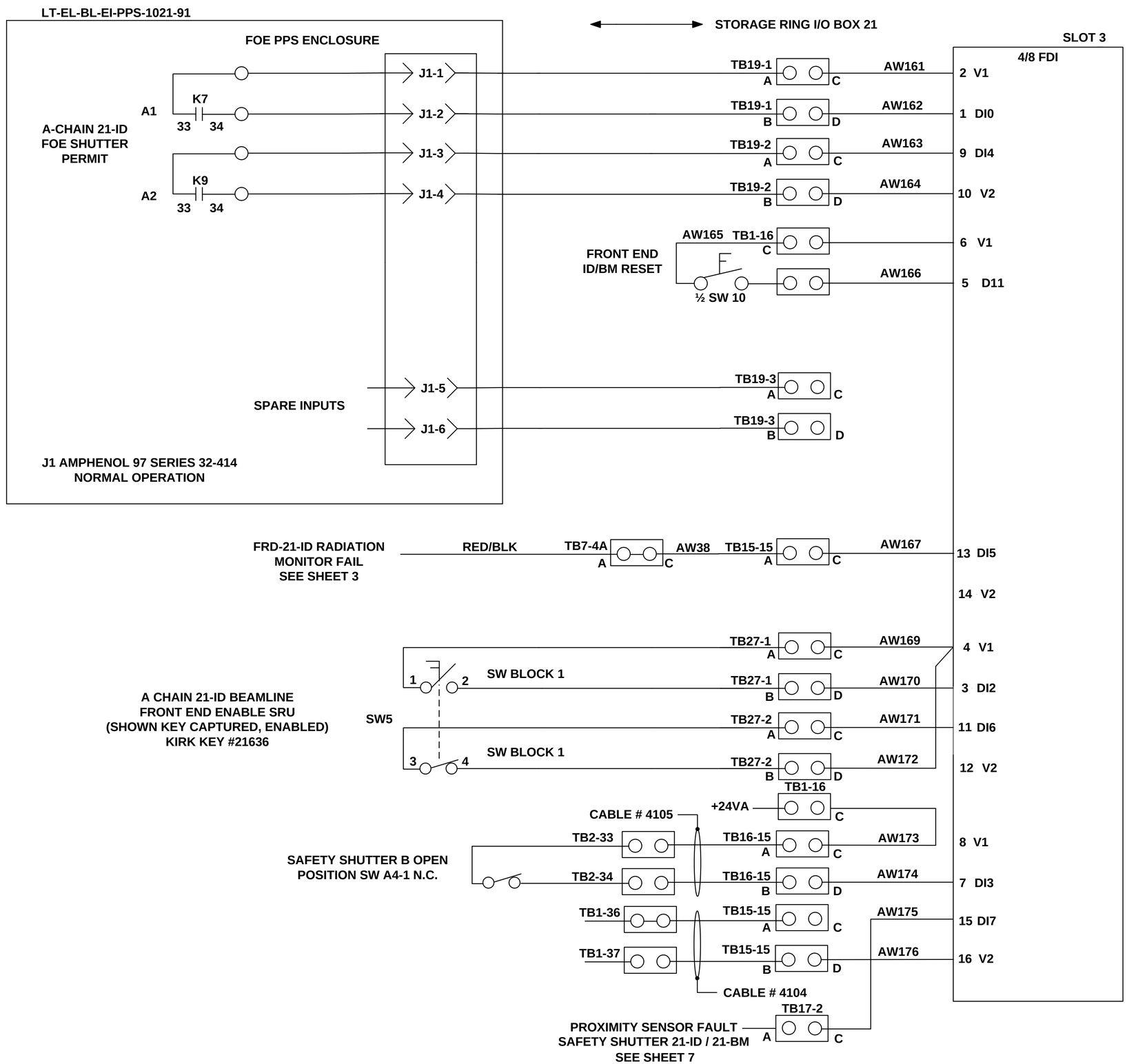

LT-EL-SR-EI-PPS-0221-90

ID BEAMLINE GROUP

A

21-ID

LT-EL-SR-EI	LT-EL-SR-EI-PPS-0221-90	E
DRAWING DIRECTORY	DRAWING NUMBER	REV
COMPUTER REPRODUCIBLE	SCALE: N/A	SHEET 8 OF 48

REV	DESCRIPTION	BY	DATE	CHK	APP
	SEE SHEET 1				

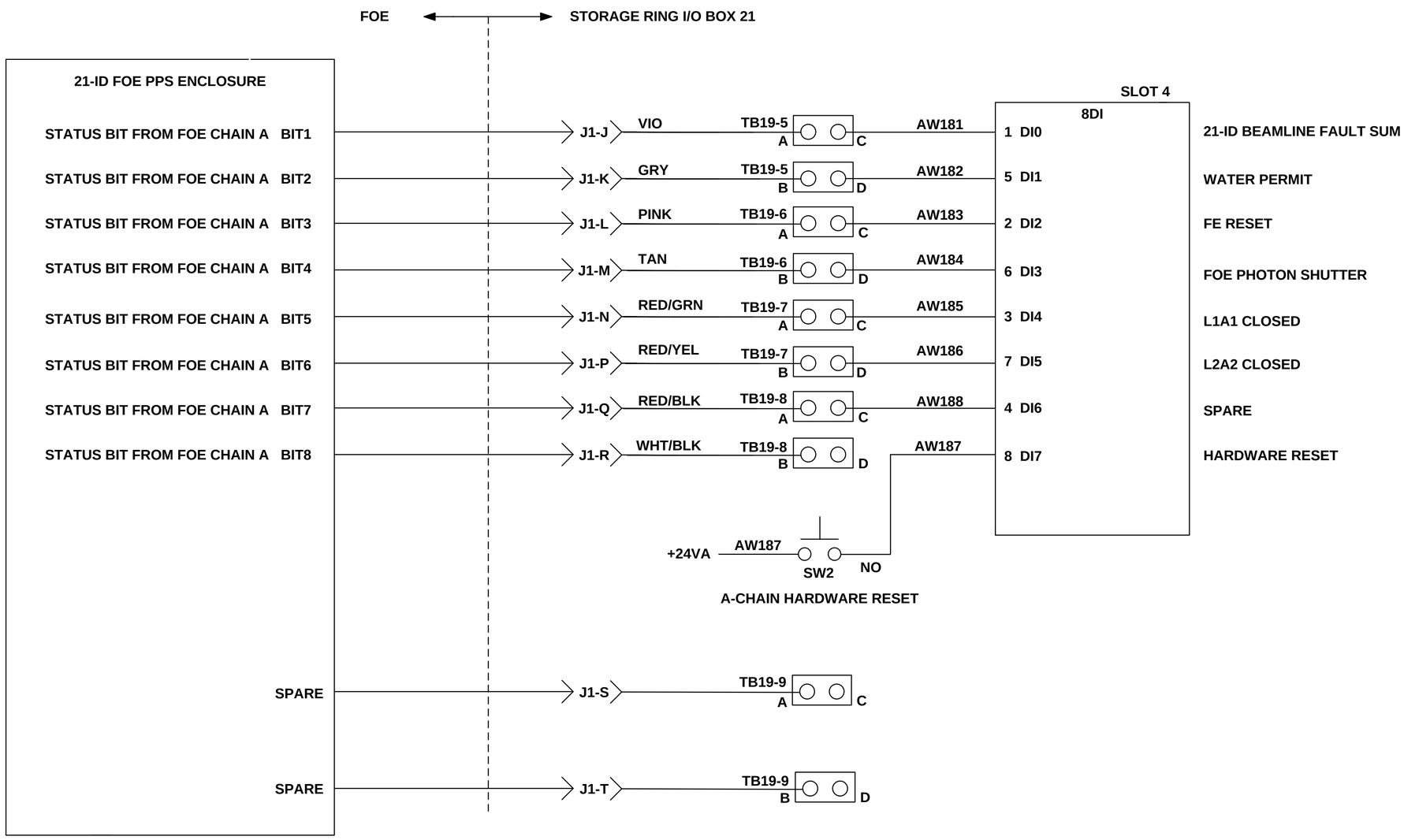

LT-EL-SR-EI-PPS-0221-90

ID BEAMLINE GROUP

A

21-ID

LT-EL-SR-EI (DRAWING DIRECTORY)	LT-EL-SR-EI-PPS-0221-90 (DRAWING NUMBER)	E (REV)
COMPUTER REPRODUCIBLE	SCALE: N/A	SHEET 9 OF 48

REV	DESCRIPTION	BY	DATE	CHK	APP
	SEE SHEET 1				

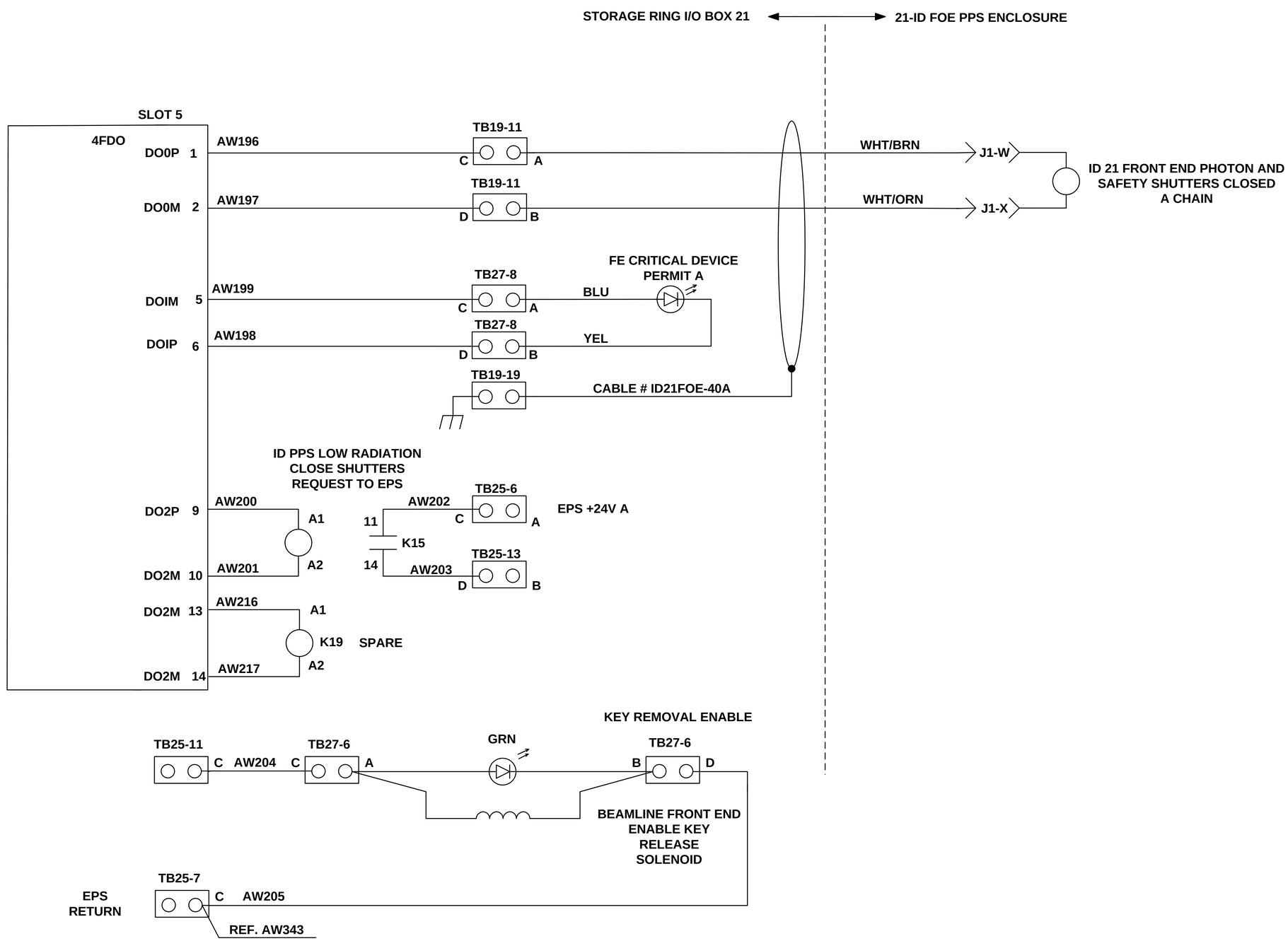

LT-EL-SR-EI-PPS-0221-90

ID BEAMLINE GROUP

A

21-ID

LT-EL-SR-EI	LT-EL-SR-EI-PPS-0221-90	E
DRAWING DIRECTORY	DRAWING NUMBER	REV
COMPUTER REPRODUCIBLE	SCALE: N/A	SHEET 10 OF 48

REV	DESCRIPTION	BY	DATE	CHK	APP
	SEE SHEET 1				

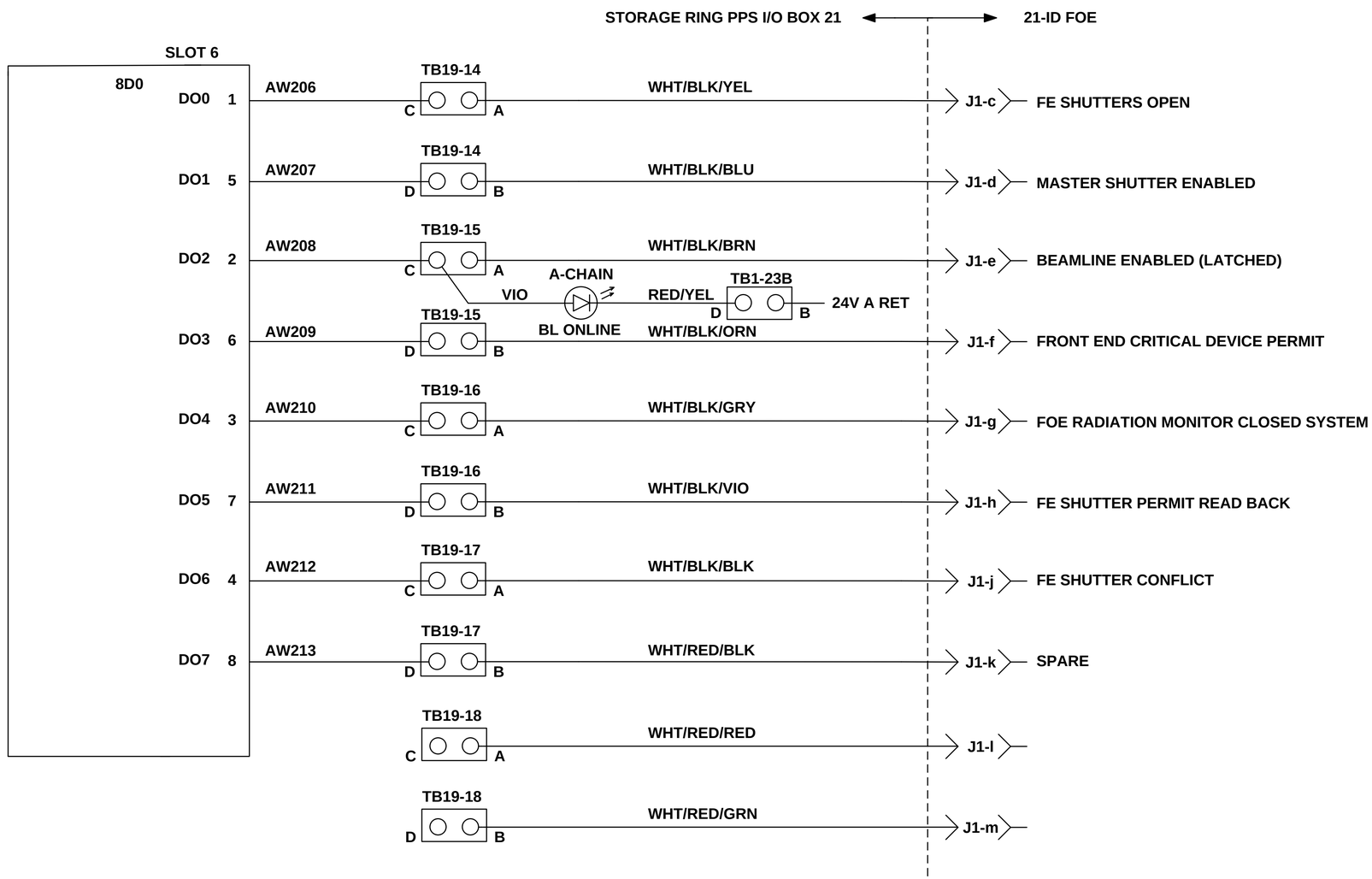

LT-EL-SR-EI-PPS-0221-90

ID BEAMLINE GROUP

A

21-ID

LT-EL-SR-EI (DRAWING DIRECTORY)	LT-EL-SR-EI-PPS-0221-90 (DRAWING NUMBER)	E (REV)
COMPUTER REPRODUCIBLE	SCALE: N/A	SHEET 11 OF 48

REV	DESCRIPTION	BY	DATE	CHK	APP
	SEE SHEET 1				

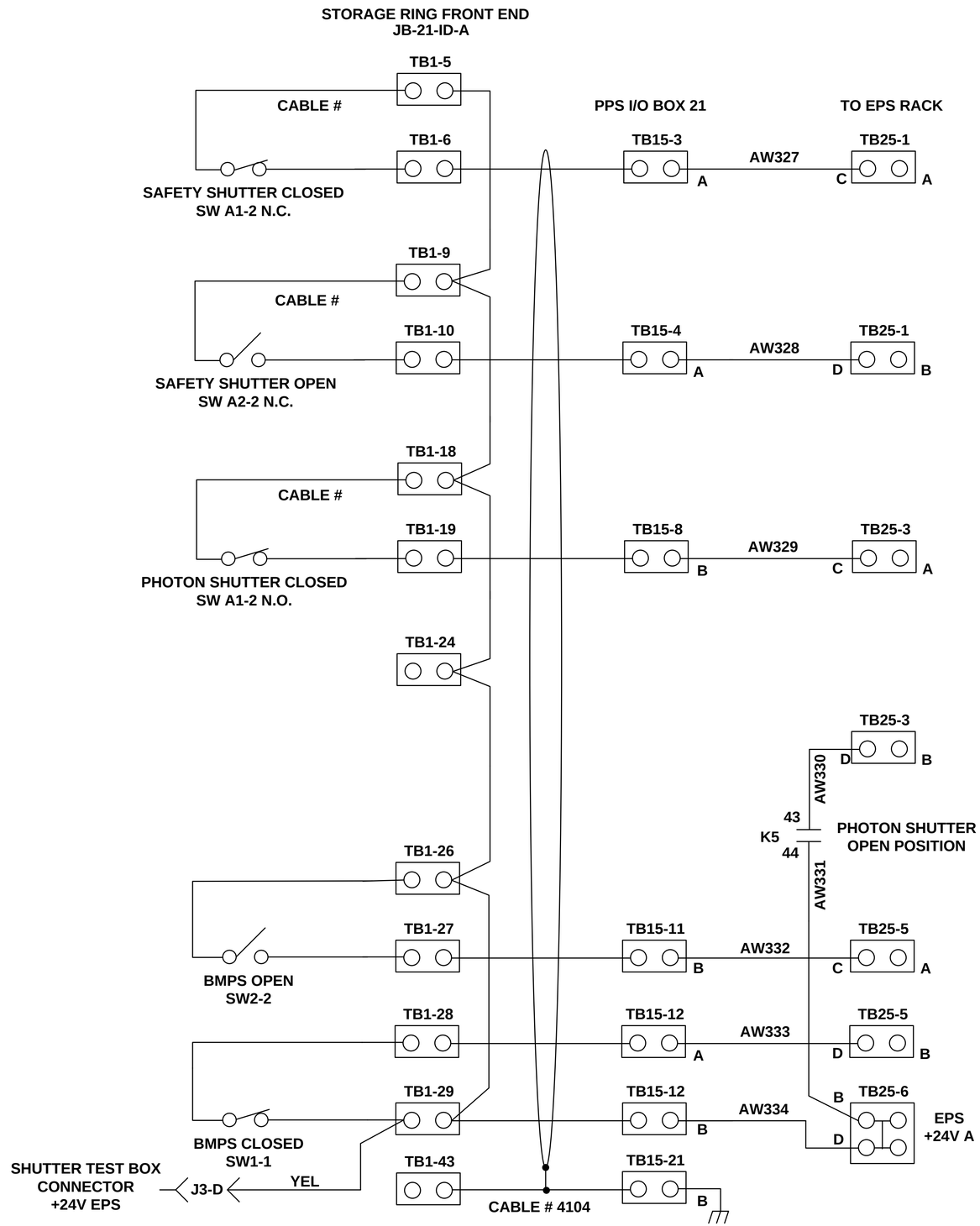

LT-EL-SR-EI-PPS-0221-90

ID BEAMLINE GROUP

A

21-ID

LT-EL-BR-EI (DRAWING DIRECTORY)	LT-EL-SR-EI-PPS-0221-90 (DRAWING NUMBER)	E (REV)
COMPUTER REPRODUCIBLE	SCALE: N/A	SHEET 12 OF 48

REV	DESCRIPTION	BY	DATE	CHK	APP
	SEE SHEET 1				

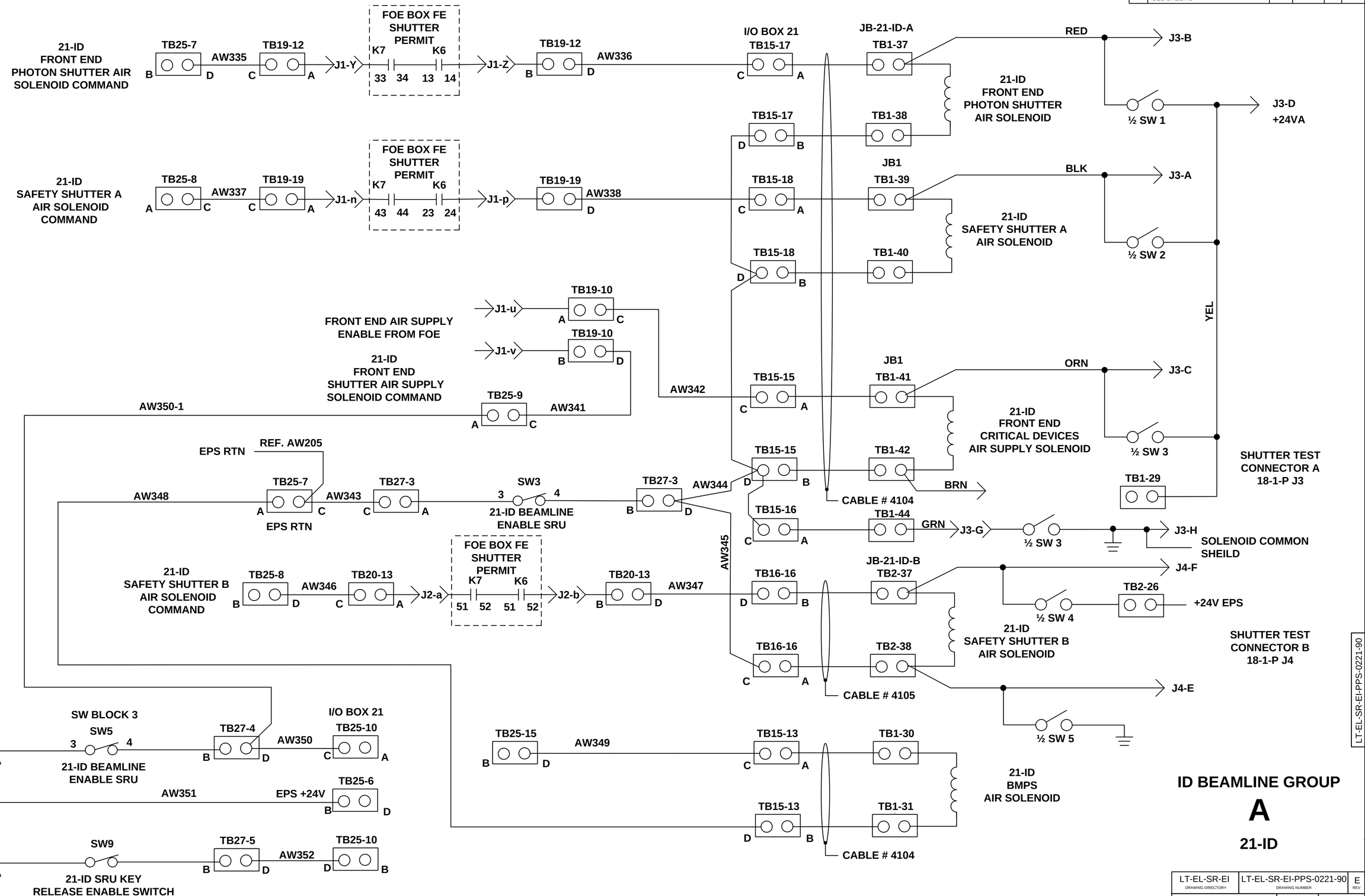

LT-EL-SR-EI	LT-EL-SR-EI-PPS-0221-90	E
DRAWING DIRECTORY	DRAWING NUMBER	REV
COMPUTER REPRODUCIBLE	SCALE: N/A	SHEET 13 OF 48

REV	DESCRIPTION	BY	DATE	CHK	APP
	SEE SHEET 1				

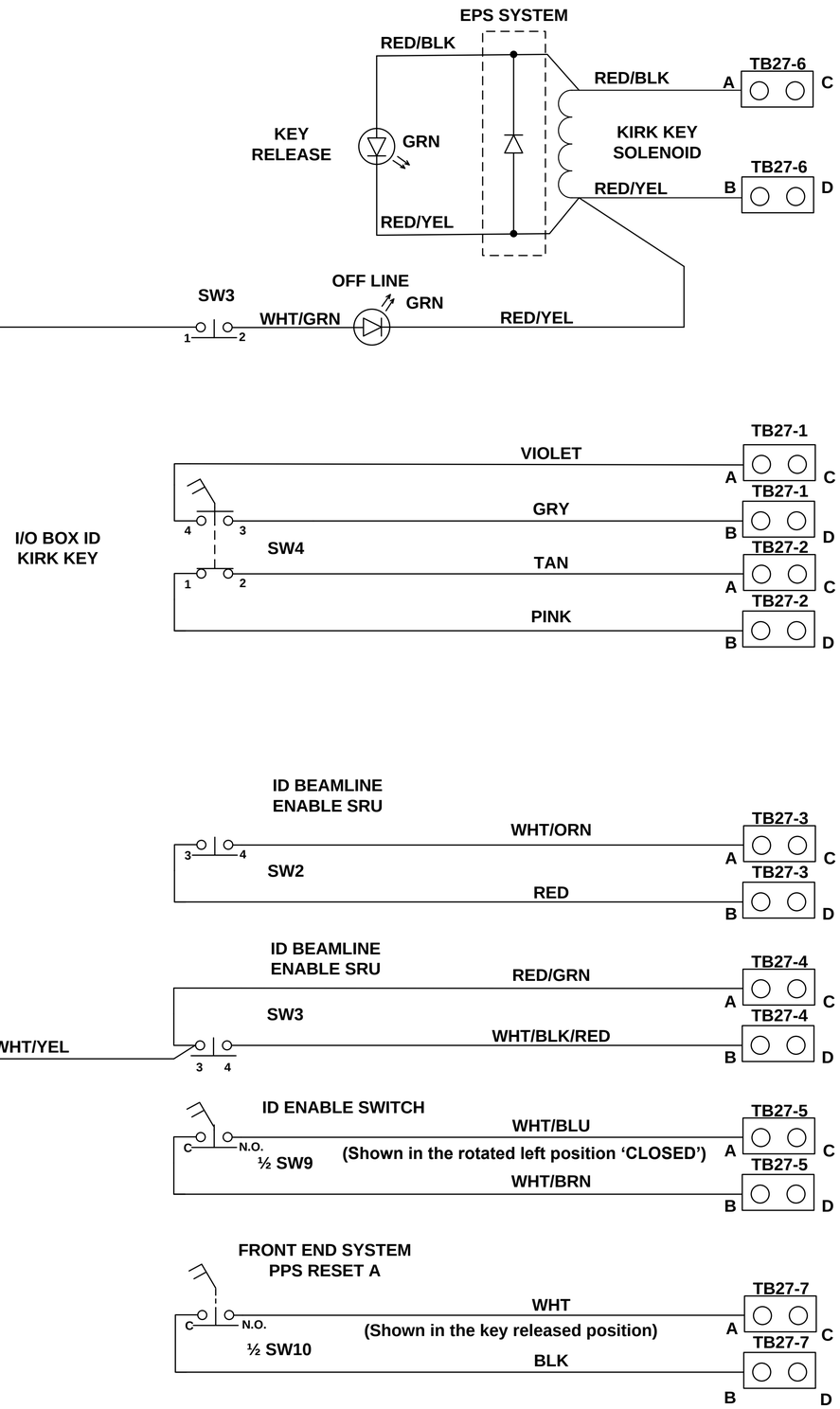

PIGTAIL
TB 27 A- CHAIN 46" LONG
TB28 B – CHAIN 36" LONG

ID ½ BEAMLINE ENABLE PANEL

LT-EL-SR-EI-PPS-0221-90

LT-EL-SR-EI (DRAWING DIRECTORY)	LT-EL-SR-EI-PPS-0221-90 (DRAWING NUMBER)	E (REV)
COMPUTER REPRODUCIBLE	SCALE: N/A	SHEET 14 OF 48

REV	DESCRIPTION	BY	DATE	CHK	APP
	SEE SHEET 1				

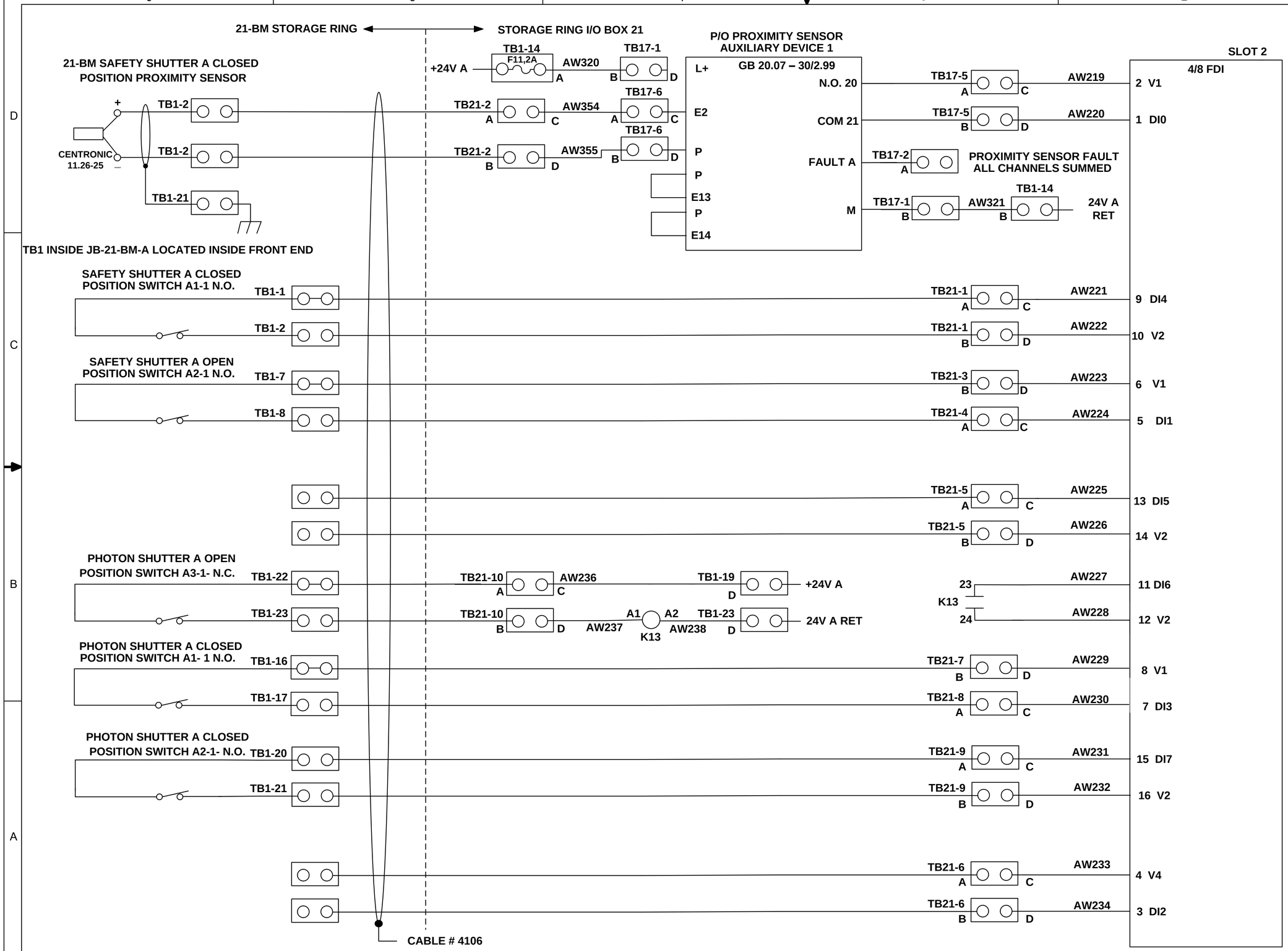

LT-EL-SR-EI-PPS-0221-90

BM BEAMLINE GROUP

A

21-BM

LT-EL-SR-EI	LT-EL-SR-EI-PPS-0221-90	E
DRAWING DIRECTORY	DRAWING NUMBER	REV

COMPUTER REPRODUCIBLE | SCALE: N/A | SHEET 15 OF 48

REV	DESCRIPTION	BY	DATE	CHK	APP
	SEE SHEET 1				

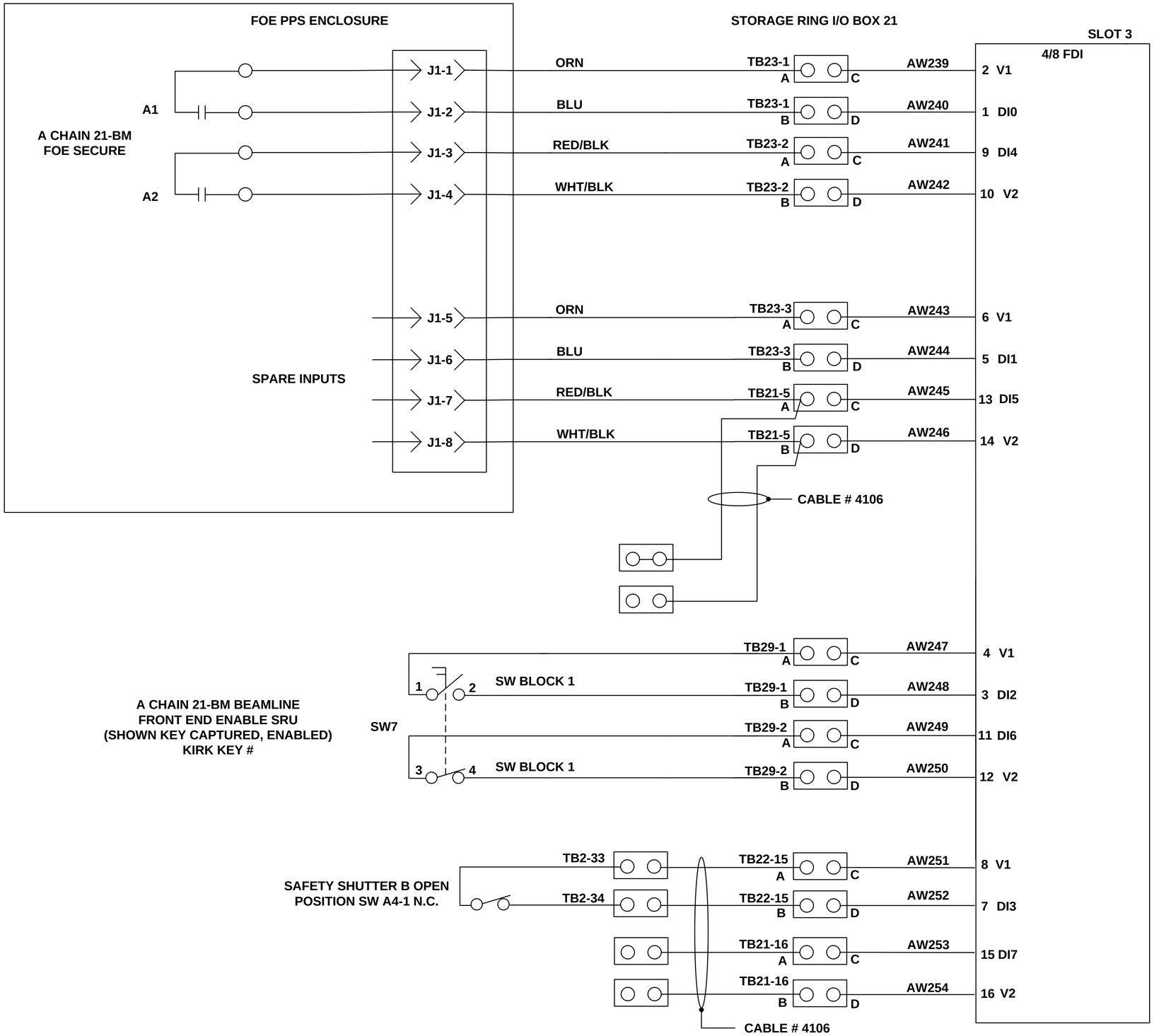

LT-EL-SR-EI-PPS-0221-90

BM BEAMLINE GROUP

A

21-BM

LT-EL-SR-EI (DRAWING DIRECTORY)	LT-EL-SR-EI-PPS-0221-90 (DRAWING NUMBER)	E (REV)
COMPUTER REPRODUCIBLE	SCALE: N/A	SHEET 16 OF 48

REV	DESCRIPTION	BY	DATE	CHK	APP
	SEE SHEET 1				

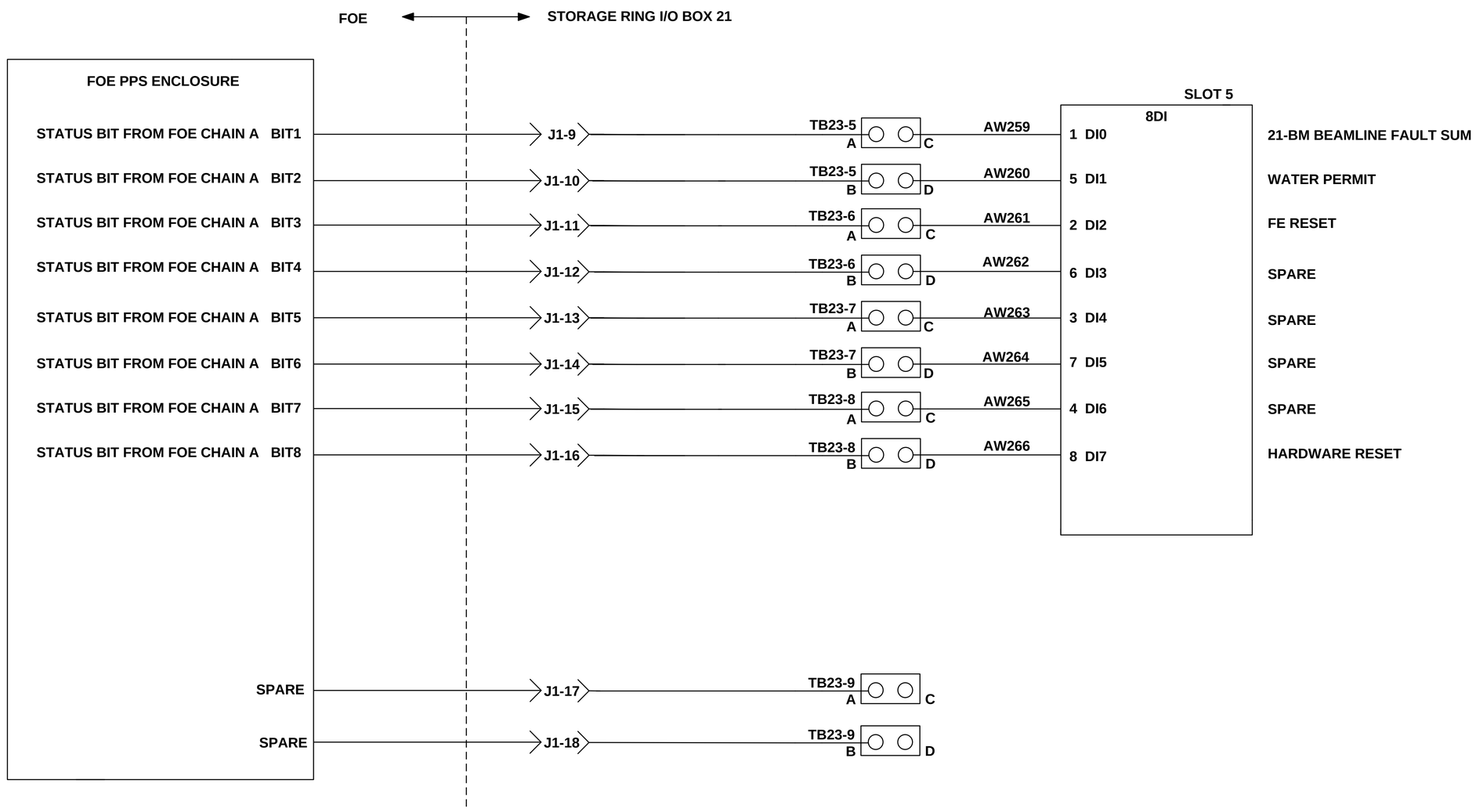

LT-EL-SR-EI-PPS-0221-90

BM BEAMLINE GROUP

A

21-BM

LT-EL-SR-EI (DRAWING DIRECTORY)	LT-EL-SR-EI-PPS-0221-90 (DRAWING NUMBER)	E (REV)
COMPUTER REPRODUCIBLE	SCALE: N/A	SHEET 17 OF 48

REV	DESCRIPTION	BY	DATE	CHK	APP
	SEE SHEET 1				

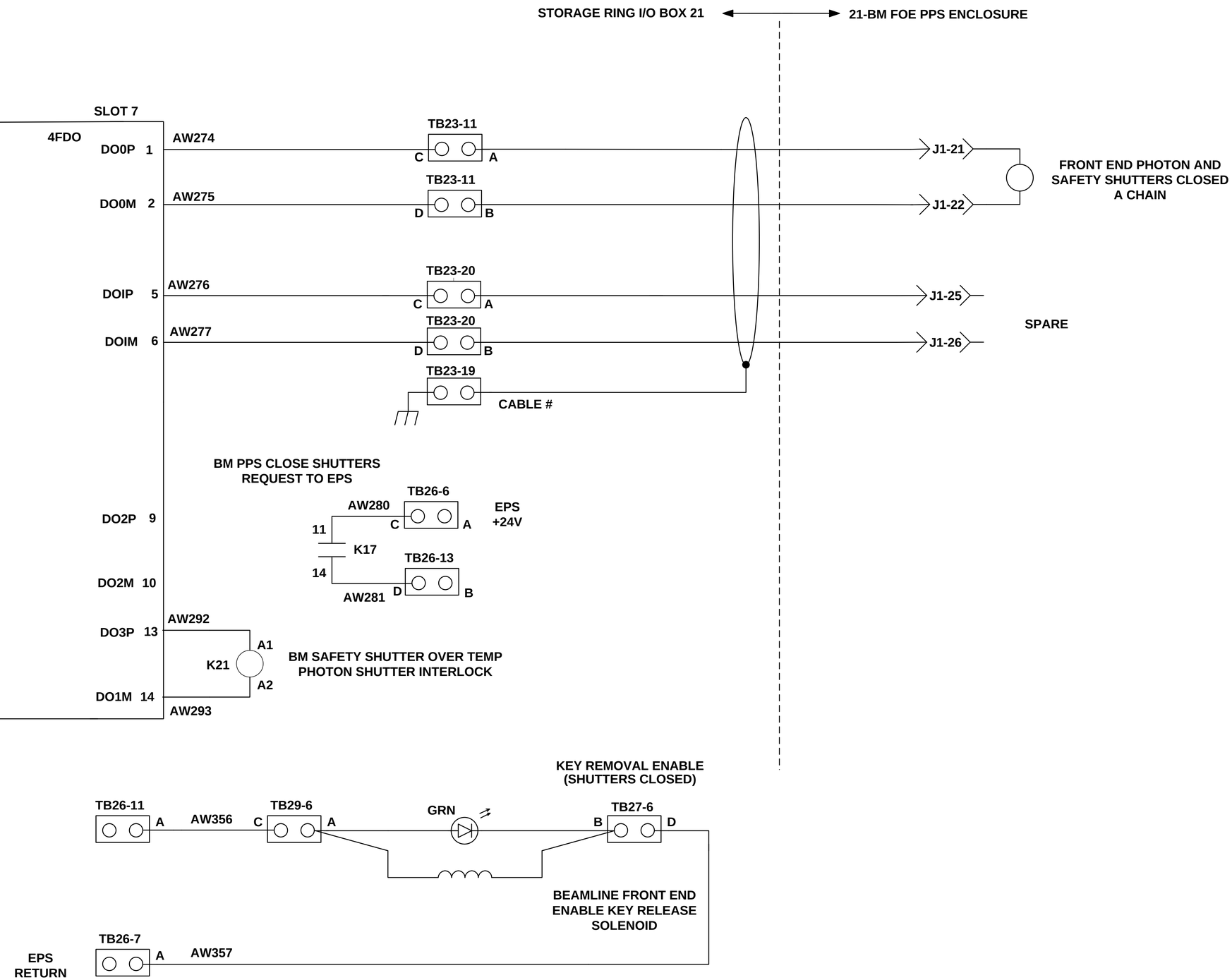

LT-EL-SR-EI-PPS-0221-90

BM BEAMLINE GROUP

A

21-BM

LT-EL-SR-EI	LT-EL-SR-EI-PPS-0221-90	E
DRAWING DIRECTORY	DRAWING NUMBER	REV

COMPUTER REPRODUCIBLE | SCALE: N/A | SHEET 18 OF 48

REV	DESCRIPTION	BY	DATE	CHK	APP
	SEE SHEET 1				

STORAGE RING PPS I/O BOX 21 ⟷ 21-BM FOE

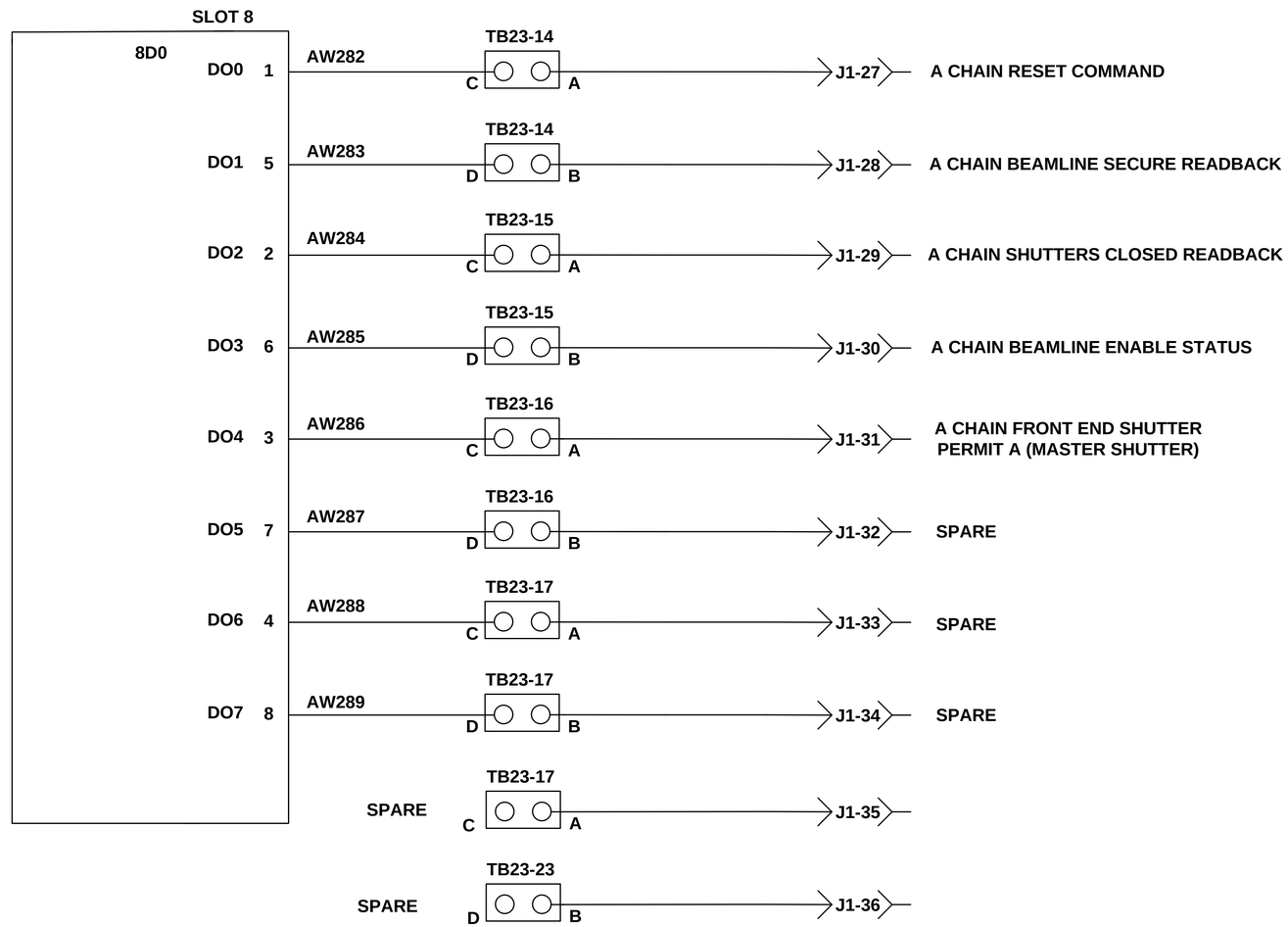

LT-EL-SR-EI-PPS-0221-90

BM BEAMLINE GROUP

A

21-BM

LT-EL-SR-EI	LT-EL-SR-EI-PPS-0221-90	E
DRAWING DIRECTORY	DRAWING NUMBER	REV

COMPUTER REPRODUCIBLE | SCALE: N/A | SHEET 19 OF 48

REV	DESCRIPTION	BY	DATE	CHK	APP
	SEE SHEET 1				

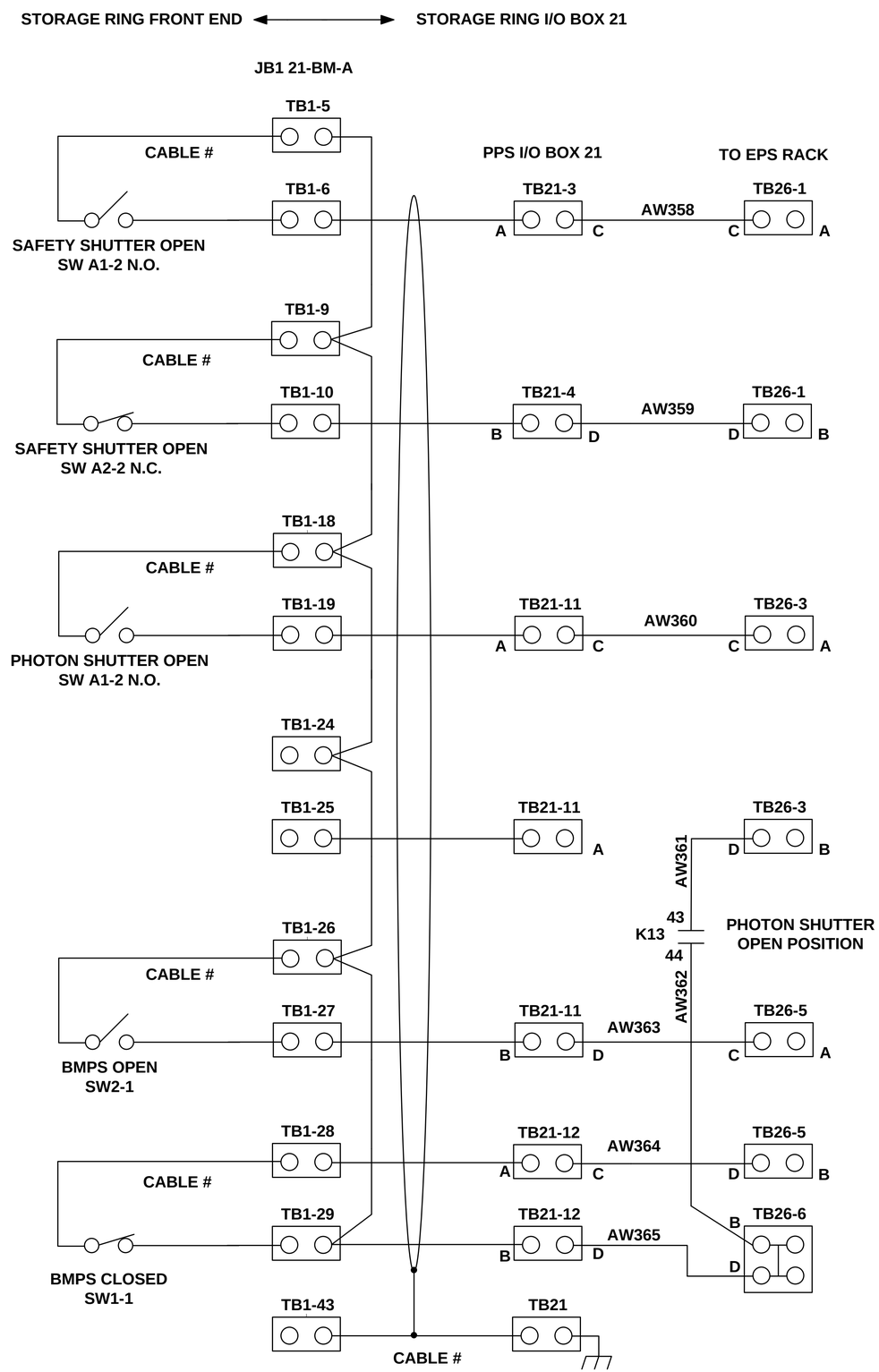

LT-EL-SR-EI-PPS-0221-90

BM BEAMLINE GROUP

A

21-BM

LT-EL-SR-EI	LT-EL-SR-EI-PPS-0221-90	E
DRAWING DIRECTORY	DRAWING NUMBER	REV

COMPUTER REPRODUCIBLE | SCALE: N/A | SHEET 20 OF 48

REV	DESCRIPTION	BY	DATE	CHK	APP
	SEE SHEET 1				

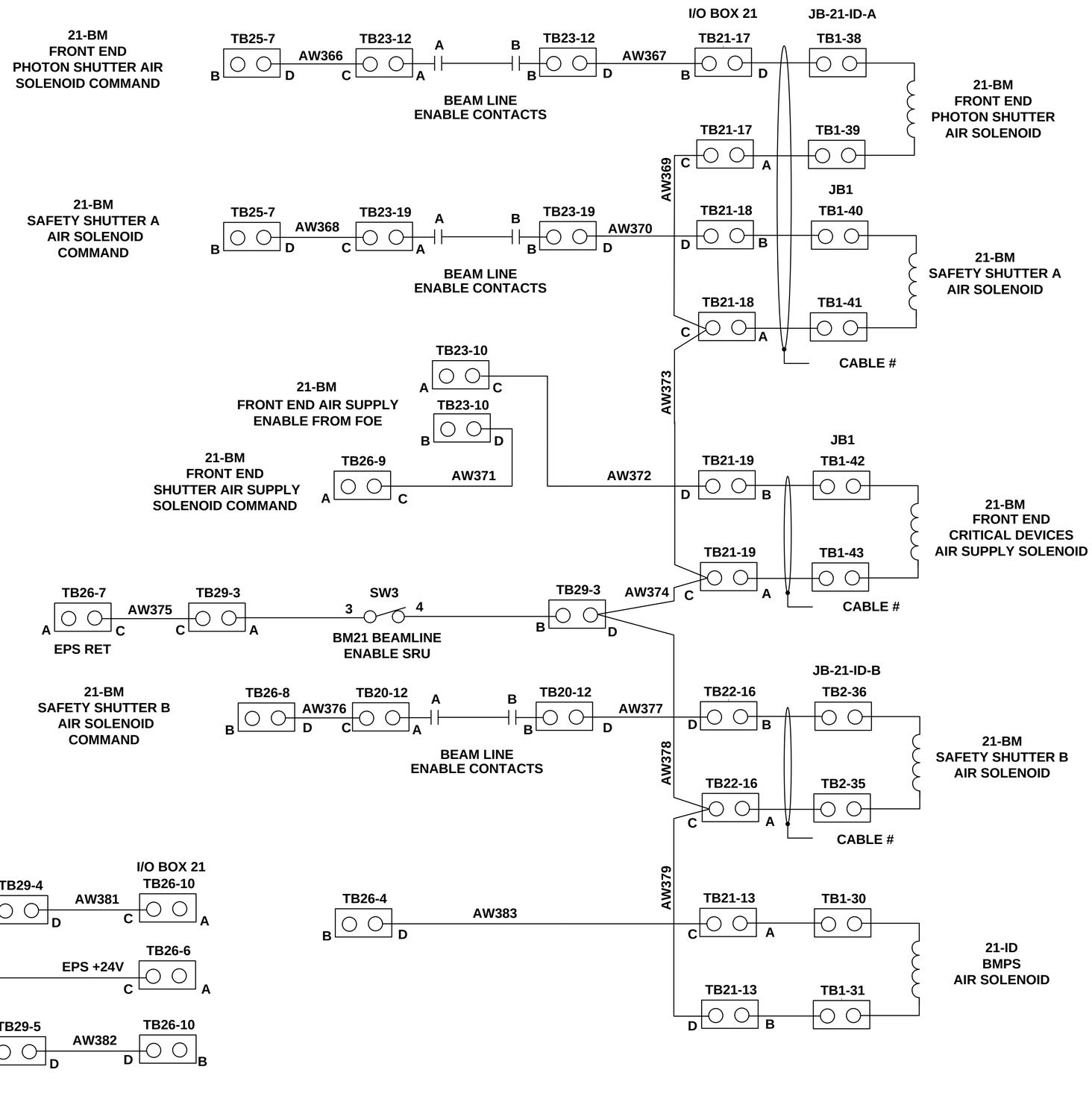

LT-EL-SR-EI-PPS-0221-90

BM BEAMLINE GROUP

A

21-BM

LT-EL-SR-EI	LT-EL-SR-EI-PPS-0221-90	E
DRAWING DIRECTORY	DRAWING NUMBER	REV
COMPUTER REPRODUCIBLE	SCALE: N/A	SHEET 21 OF 48

REV	DESCRIPTION	BY	DATE	CHK	APP
	SEE SHEET 1				

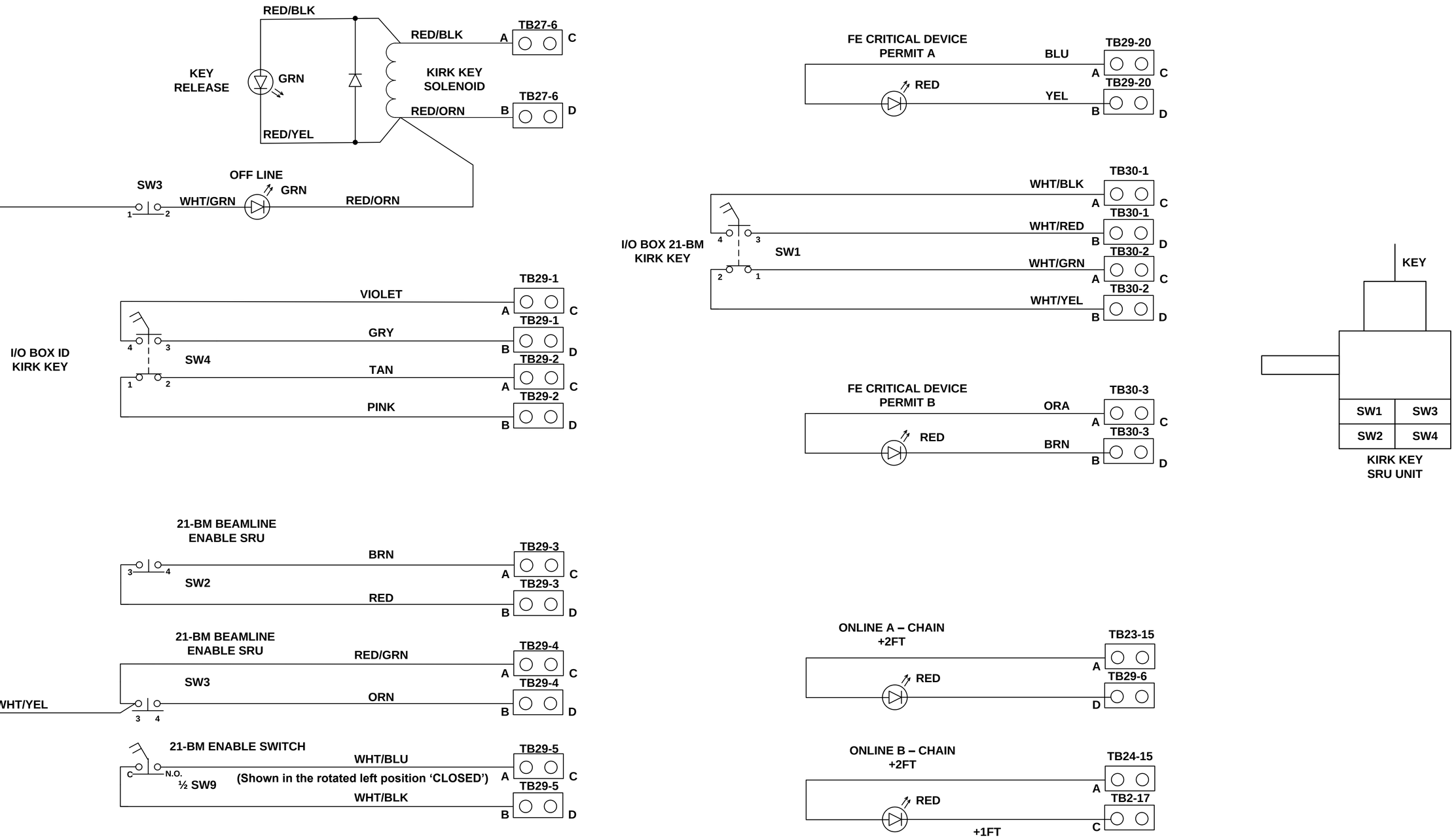

PIGTAIL
TB 29 A- CHAIN 46" LONG
TB30 B – CHAIN 36" LONG

BM ½ BEAMLINE ENABLE PANEL

LT-EL-SR-EI-PPS-0221-90

LT-EL-SR-EI	LT-EL-SR-EI-PPS-0221-90	E
DRAWING DIRECTORY	DRAWING NUMBER	REV
COMPUTER REPRODUCIBLE	SCALE: N/A	SHEET 22 OF 48

REV	DESCRIPTION	BY	DATE	CHK	APP
	SEE SHEET 1				

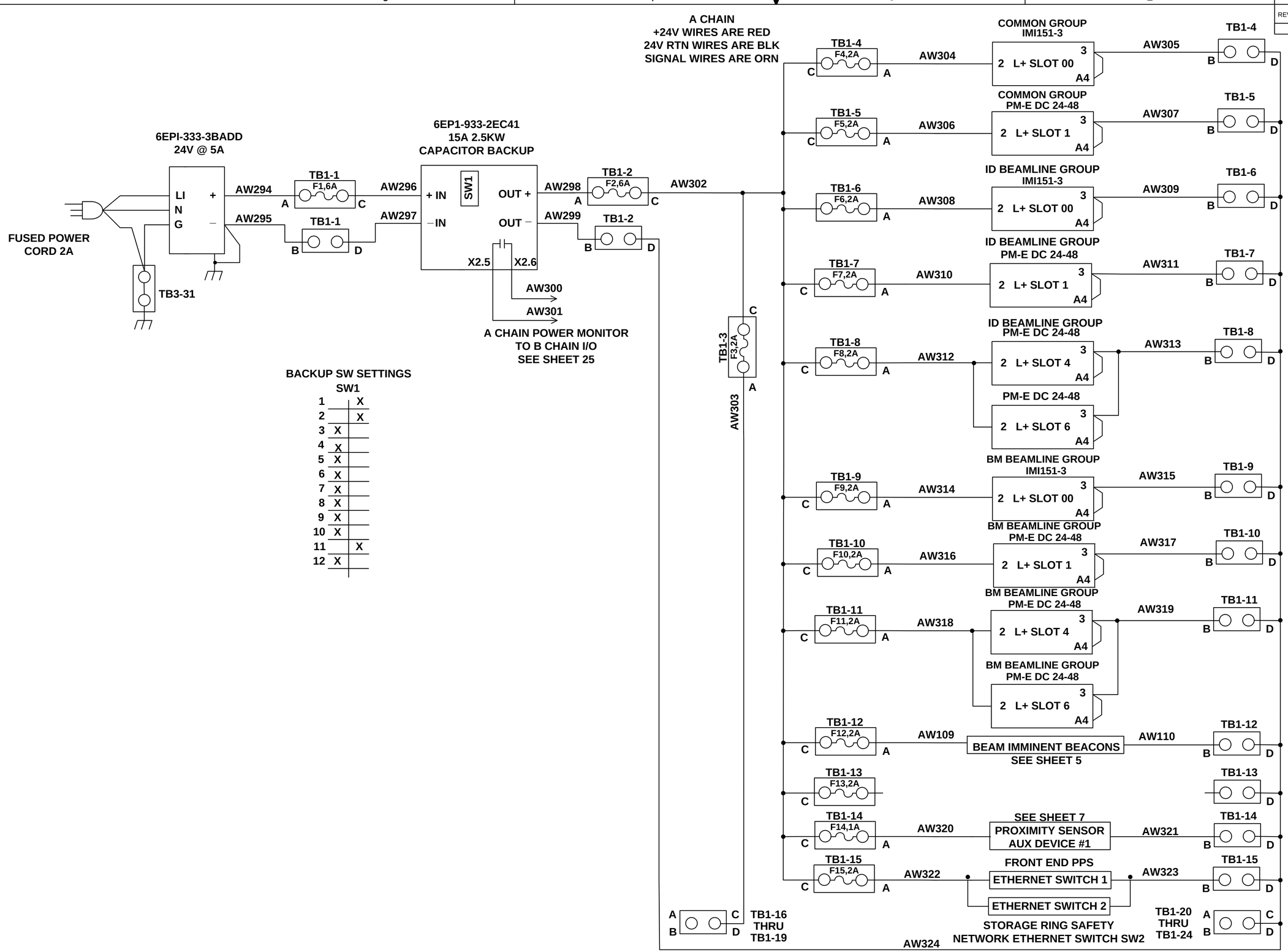

1		X
2		X
3	X	
4	X	
5	X	
6	X	
7	X	
8	X	
9	X	
10	X	
11		X
12	X	

POWER DISTRIBUTION

A

LT-EL-SR-EI-PPS-0221-90

LT-EL-SR-EI (DRAWING DIRECTORY)	LT-EL-SR-EI-PPS-0221-90 (DRAWING NUMBER)	E (REV)
COMPUTER REPRODUCIBLE	SCALE: N/A	SHEET 23 OF 48

REV	DESCRIPTION	BY	DATE	CHK	APP
	SEE SHEET 1				

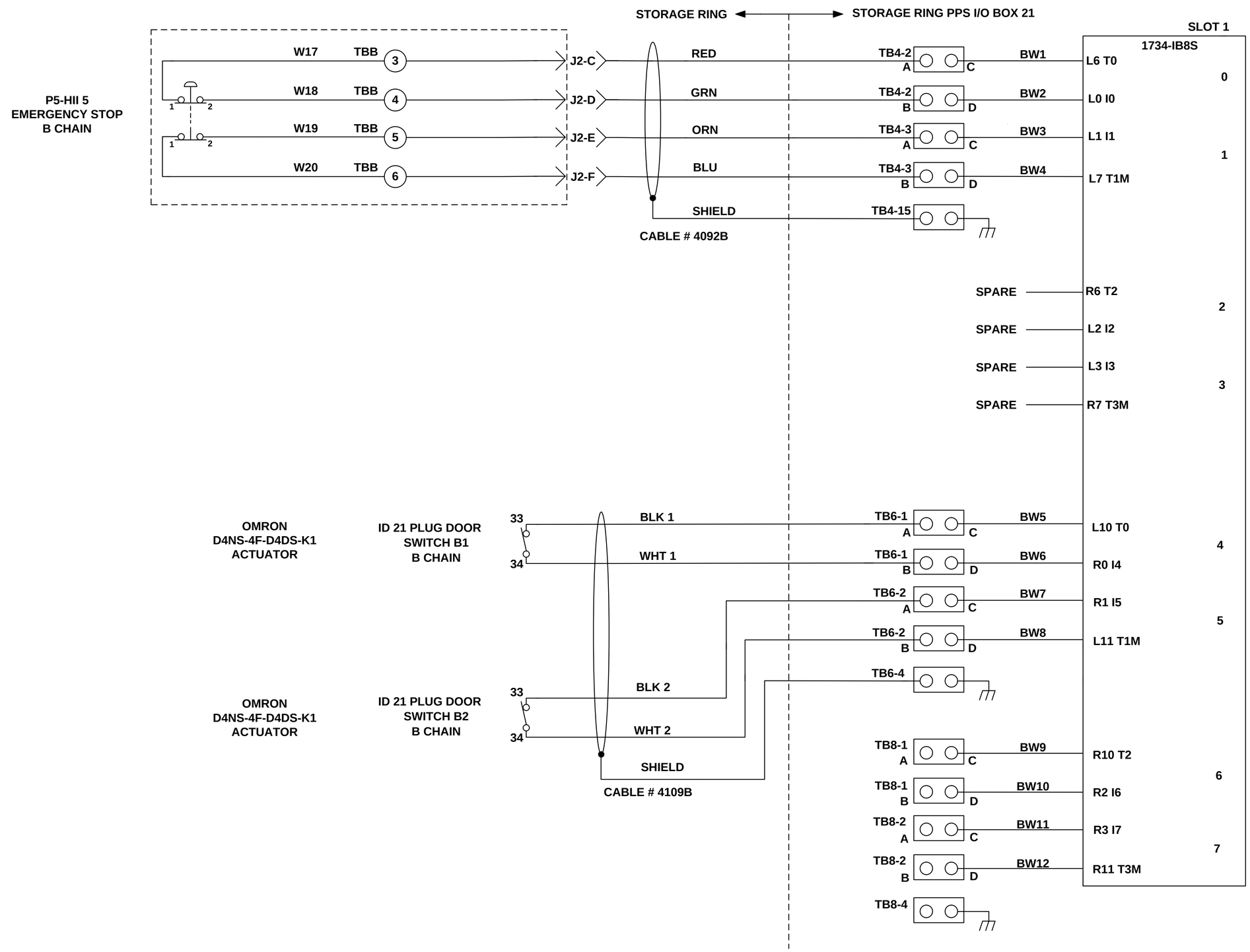

LT-EL-SR-EI-PPS-0221-90

COMMON GROUP

B

LT-EL-SR-EI	LT-EL-SR-EI-PPS-0221-90	E
DRAWING DIRECTORY	DRAWING NUMBER	REV
COMPUTER REPRODUCIBLE	SCALE: N/A	SHEET 24 OF 48

REV	DESCRIPTION	BY	DATE	CHK	APP
	SEE SHEET 1				

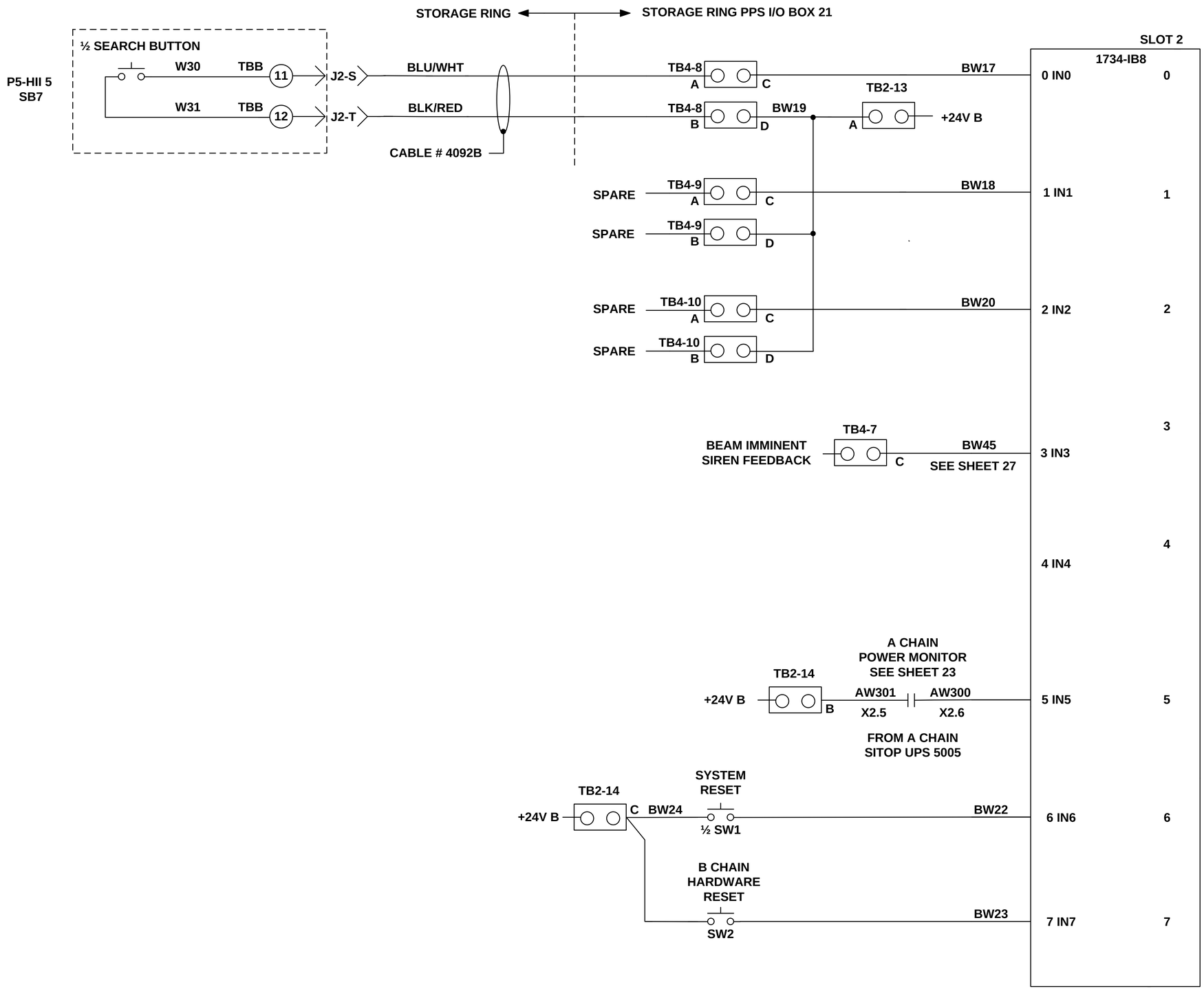

LT-EL-SR-EI-PPS-0221-90

COMMON GROUP

B

LT-EL-SR-EI	LT-EL-SR-EI-PPS-0221-90	E
DRAWING DIRECTORY	DRAWING NUMBER	REV
COMPUTER REPRODUCIBLE	SCALE: N/A	SHEET 25 OF 48

REV	DESCRIPTION	BY	DATE	CHK	APP
	SEE SHEET 1				

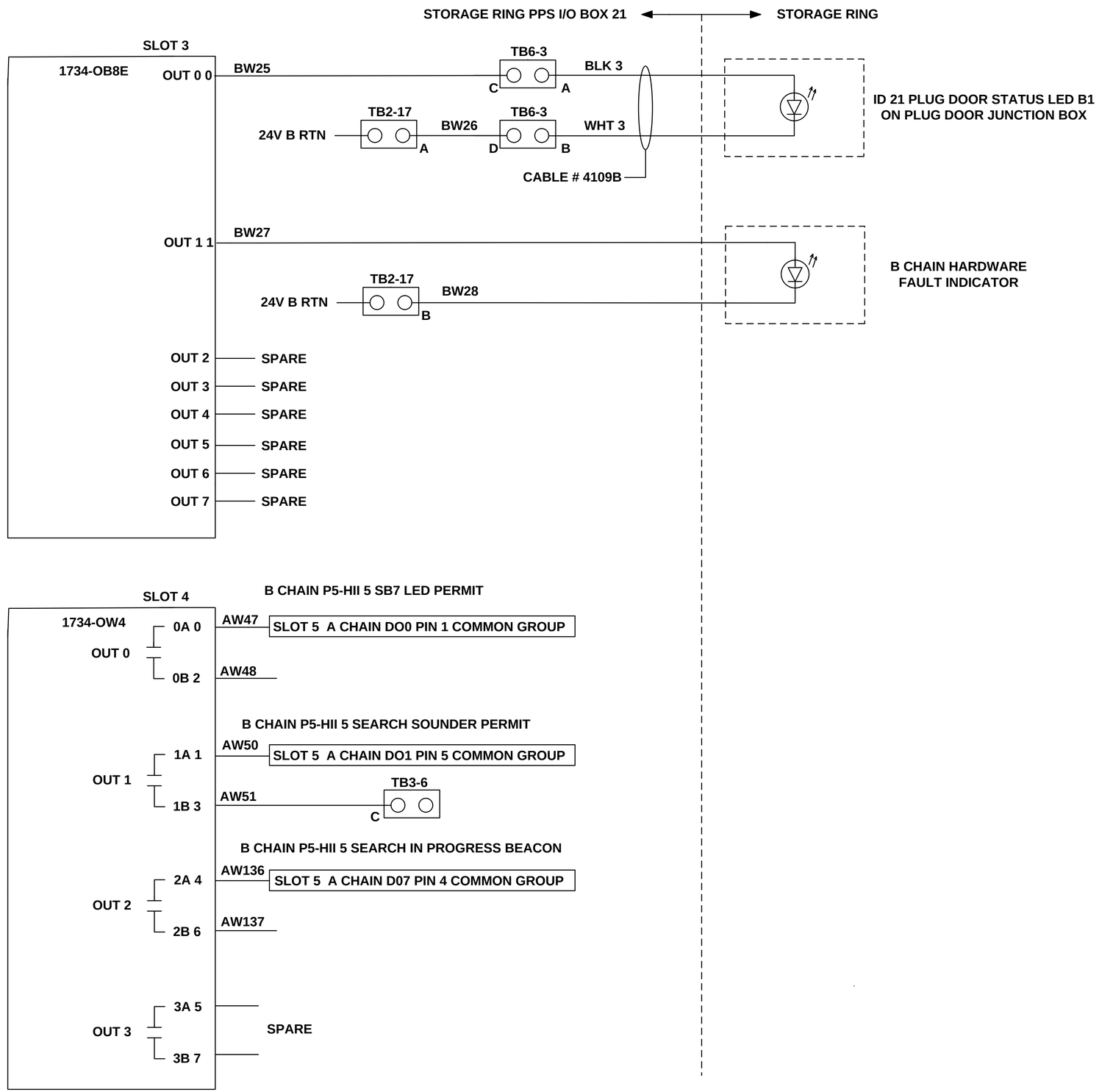

LT-EL-SR-EI-PPS-0221-90

COMMON GROUP

B

LT-EL-SR-EI	LT-EL-SR-EI-PPS-0221-90	E
DRAWING DIRECTORY	DRAWING NUMBER	REV
COMPUTER REPRODUCIBLE	SCALE: N/A	SHEET 26 OF 48

REV	DESCRIPTION	BY	DATE	CHK	APP
	SEE SHEET 1				

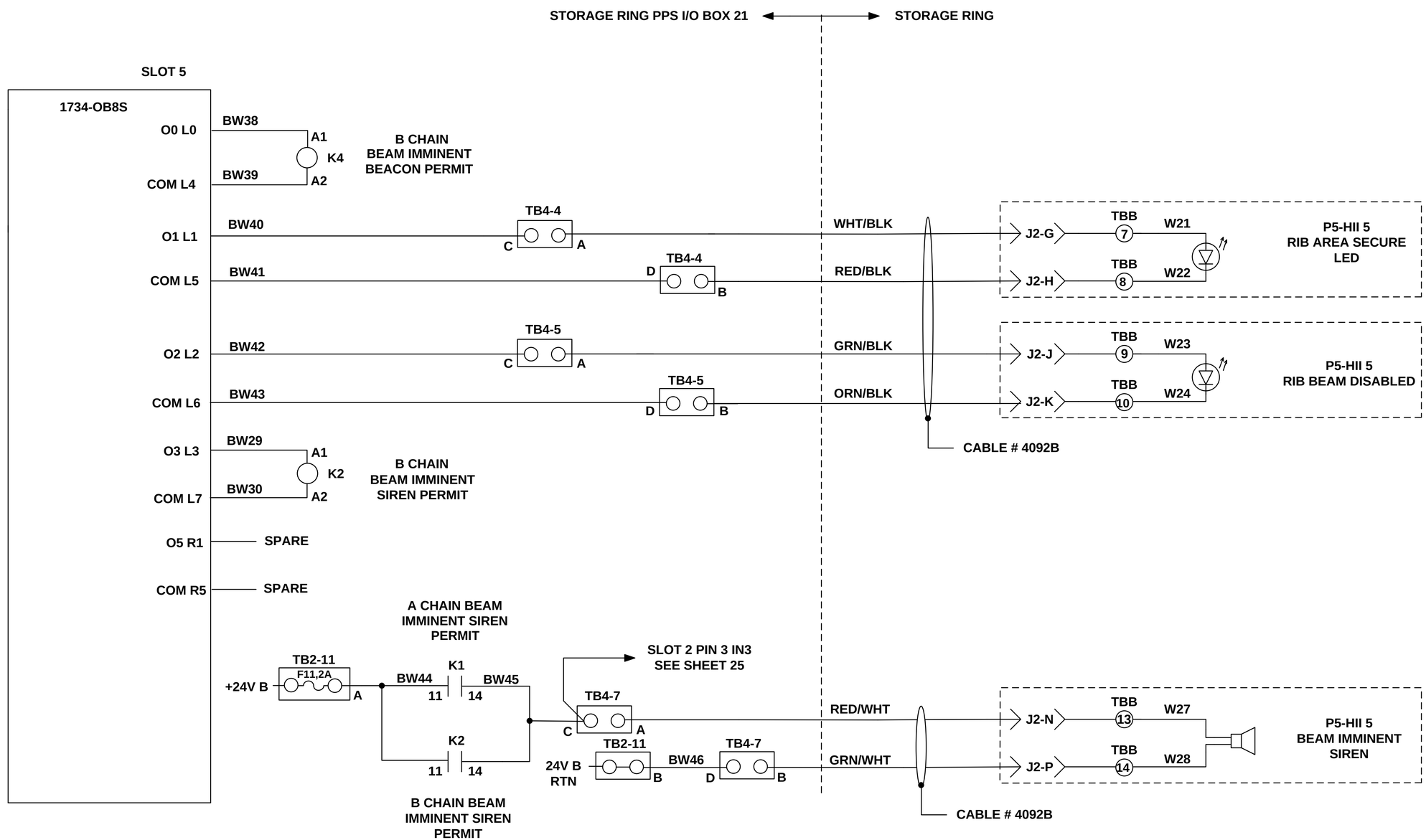

COMMON GROUP

B

LT-EL-SR-EI-PPS-0221-90

LT-EL-SR-EI (DRAWING DIRECTORY)	LT-EL-SR-EI-PPS-0221-90 (DRAWING NUMBER)	E (REV)
COMPUTER REPRODUCIBLE	SCALE: N/A	SHEET 27 OF 48

REV	DESCRIPTION	BY	DATE	CHK	APP
	SEE SHEET 1				

LT-EL-SR-EI-PPS-0221-90

SHEET LEFT BLANK
FOR FUTURE DATA

LT-EL-SR-EI	LT-EL-SR-EI-PPS-0221-90	E
DRAWING DIRECTORY	DRAWING NUMBER	REV
COMPUTER REPRODUCIBLE	SCALE: N/A	SHEET 28 OF 48

REV	DESCRIPTION	BY	DATE	CHK	APP
	SEE SHEET 1				

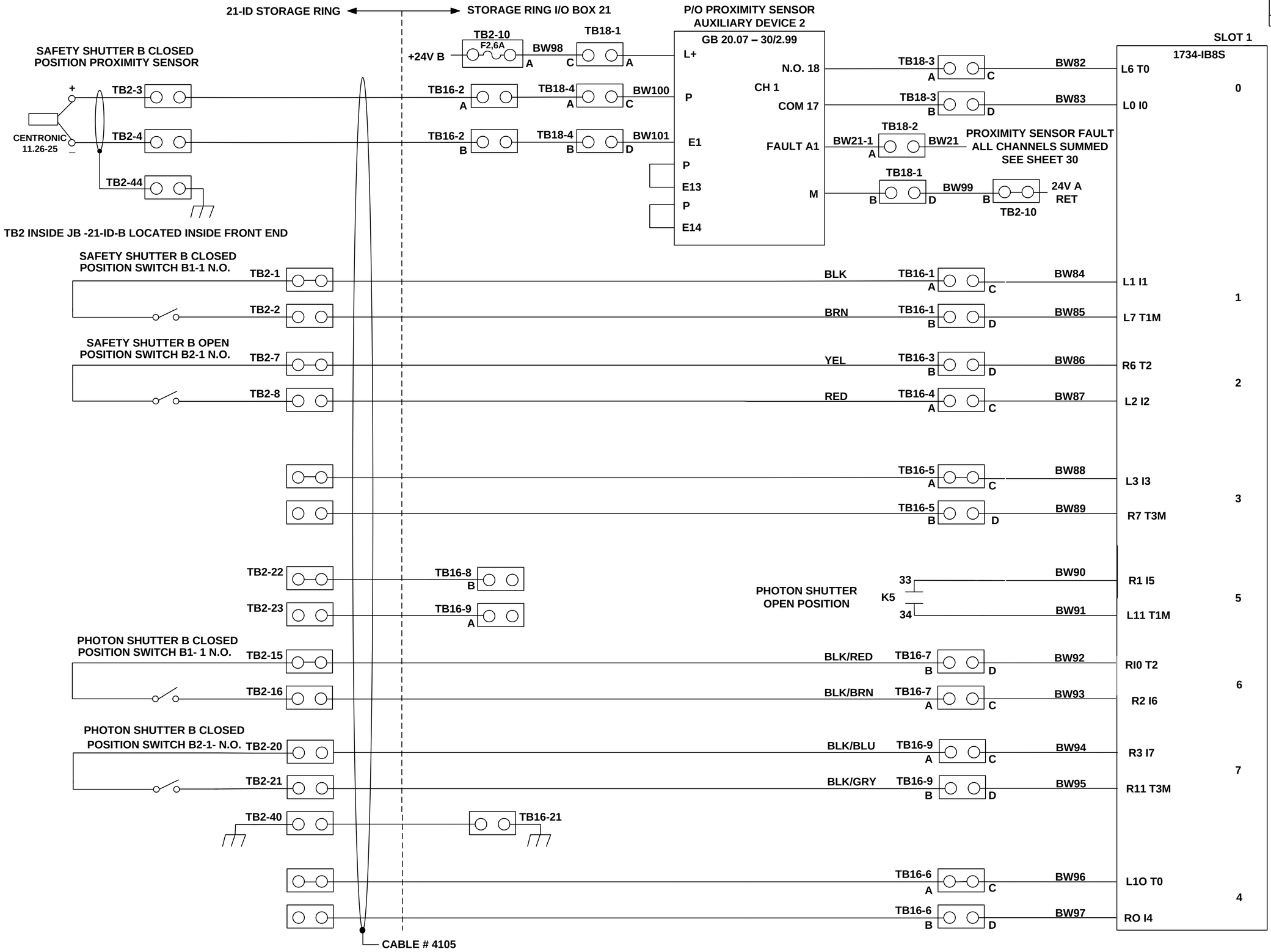

LT-EL-SR-EI-PPS-0221-90

ID BEAMLINE GROUP

B

21-ID

LT-EL-SR-EI	LT-EL-SR-EI-PPS-0221-90	E
DRAWING DIRECTORY	DRAWING NUMBER	REV

COMPUTER REPRODUCIBLE | SCALE: N/A | SHEET 29 OF 48

REV	DESCRIPTION	BY	DATE	CHK	APP
	SEE SHEET 1				

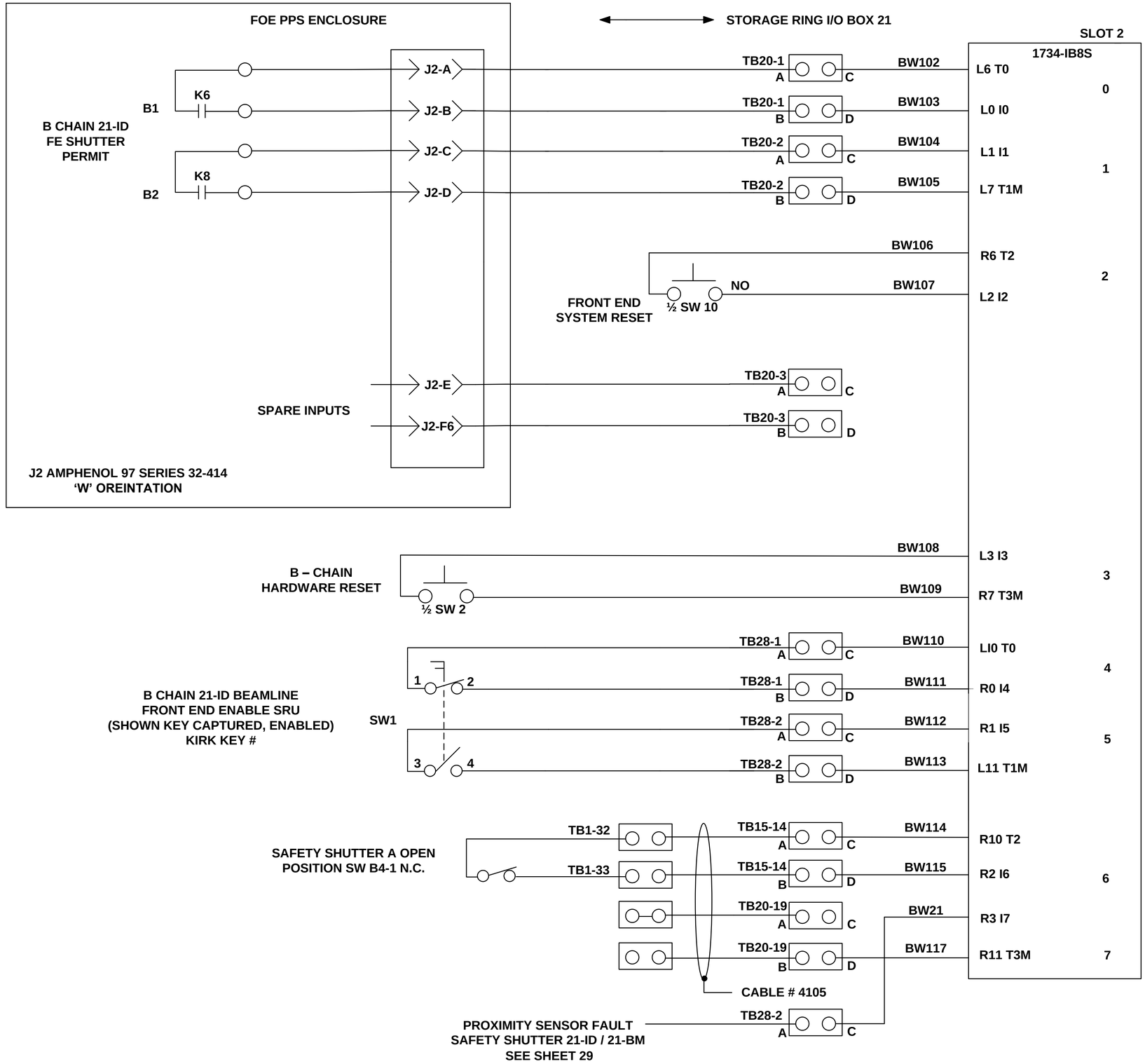

LT-EL-SR-EI-PPS-0221-90

ID BEAMLINE GROUP

B

21-ID

LT-EL-SR-EI	LT-EL-SR-EI-PPS-0221-90	E
DRAWING DIRECTORY	DRAWING NUMBER	REV
COMPUTER REPRODUCIBLE	SCALE: N/A	SHEET 30 OF 48

REV	DESCRIPTION	BY	DATE	CHK	APP
	SEE SHEET 1				

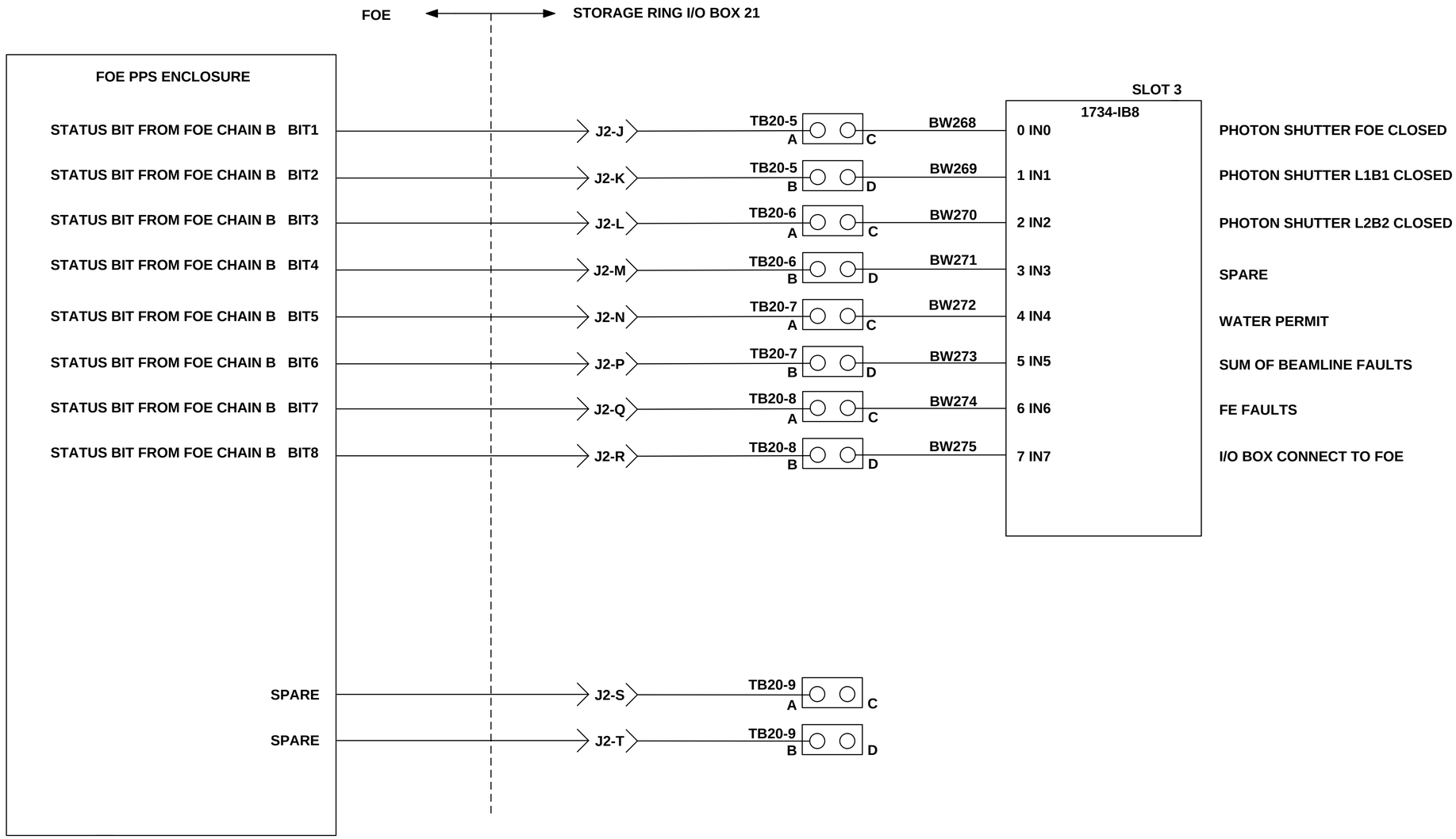

LT-EL-SR-EI-PPS-0221-90

ID BEAMLINE GROUP

B

21-ID

LT-EL-SR-EI	LT-EL-SR-EI-PPS-0221-90	E
DRAWING DIRECTORY	DRAWING NUMBER	REV

COMPUTER REPRODUCIBLE | SCALE: N/A | SHEET 31 OF 48

REV	DESCRIPTION	BY	DATE	CHK	APP
	SEE SHEET 1				

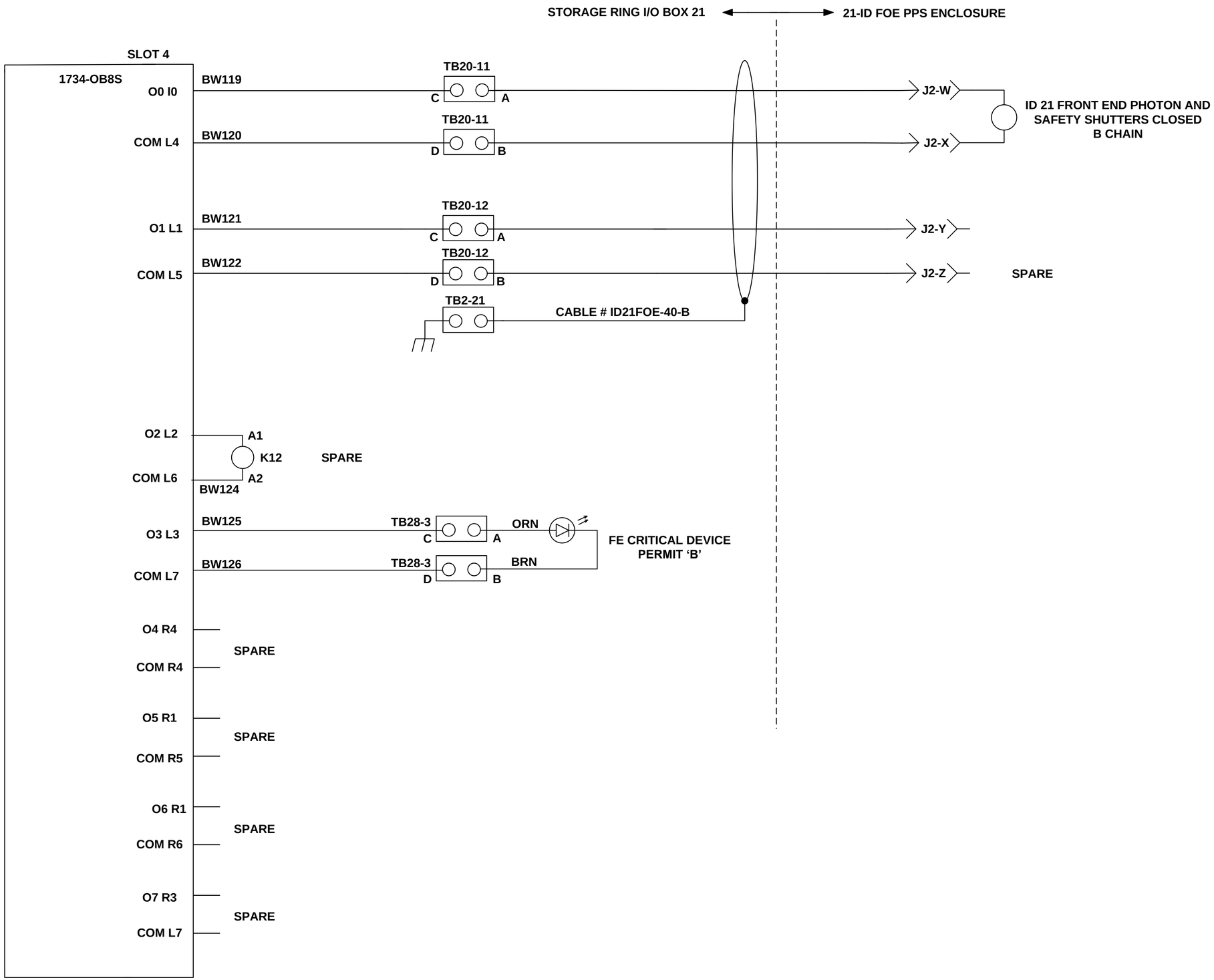

LT-EL-SR-EI-PPS-0221-90

ID BEAMLINE GROUP

B

21-ID

LT-EL-SR-EI	LT-EL-SR-EI-PPS-0221-90	E
DRAWING DIRECTORY	DRAWING NUMBER	REV
COMPUTER REPRODUCIBLE	SCALE: N/A	SHEET 32 OF 48

REV	DESCRIPTION	BY	DATE	CHK	APP
	SEE SHEET 1				

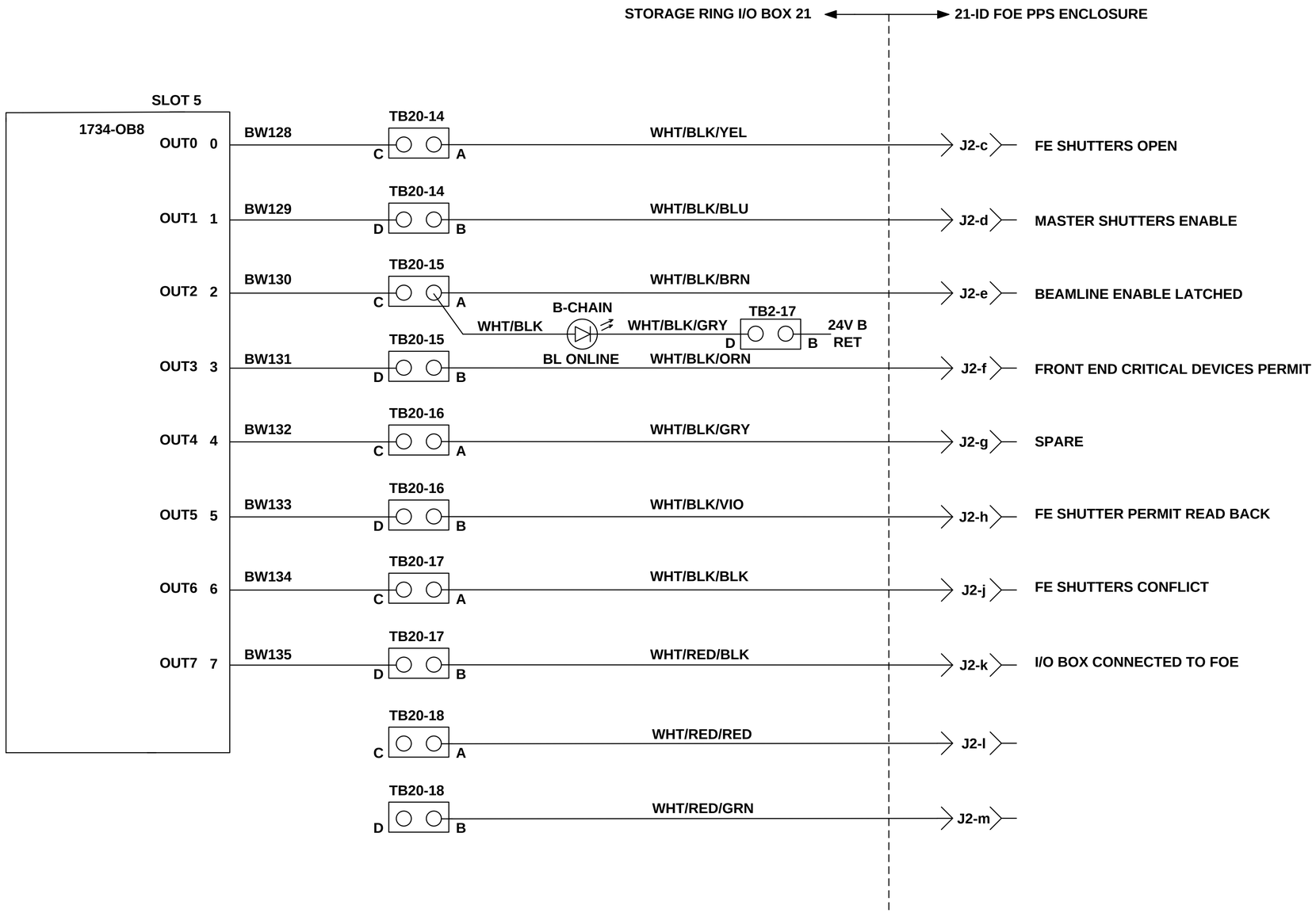

LT-EL-SR-EI-PPS-0221-90

ID BEAMLINE GROUP

B

21-ID

LT-EL-SR-EI	LT-EL-SR-EI-PPS-0221-90	E
DRAWING DIRECTORY	DRAWING NUMBER	REV
COMPUTER REPRODUCIBLE	SCALE: N/A	SHEET 33 OF 48

REV	DESCRIPTION	BY	DATE	CHK	APP
	SEE SHEET 1				

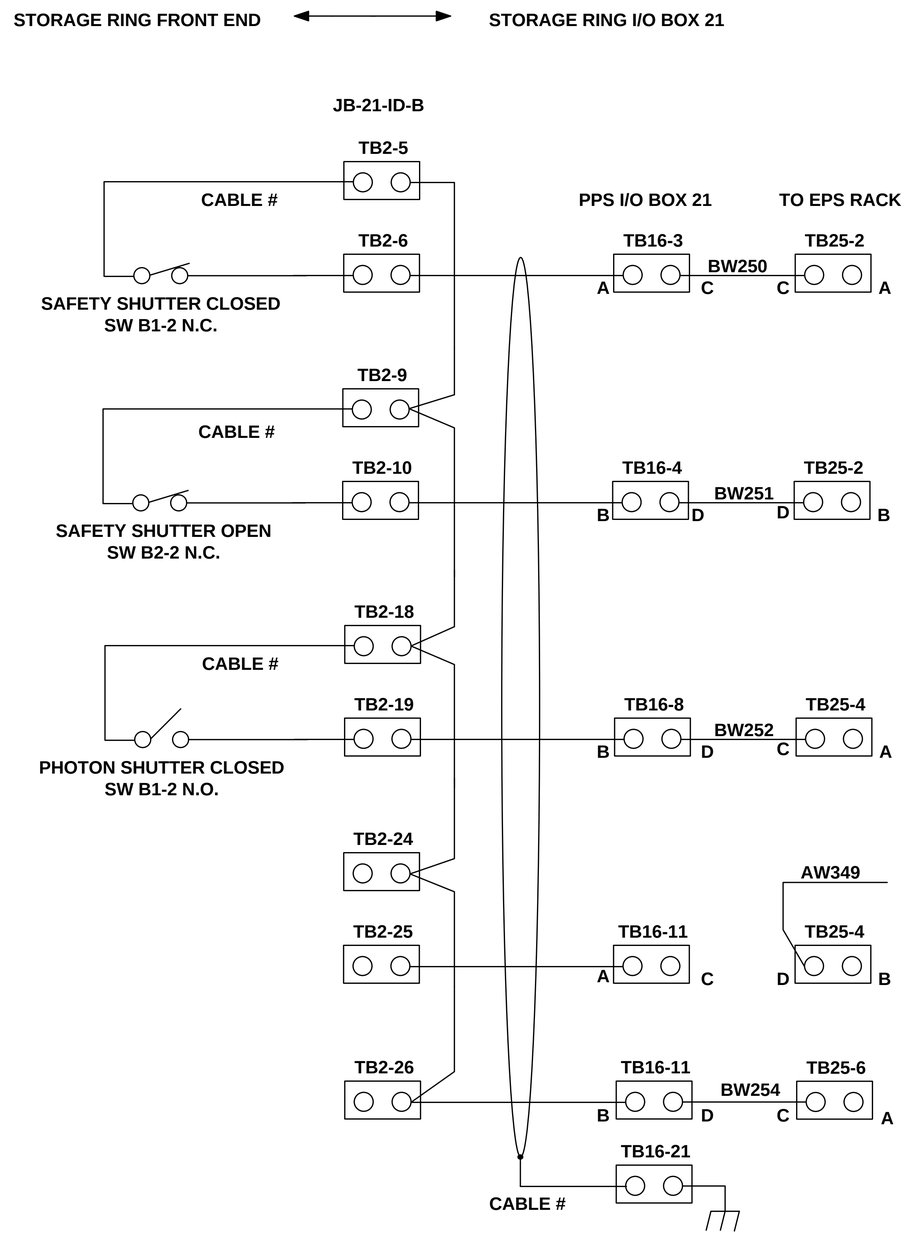

LT-EL-SR-EI-PPS-0221-90

ID BEAMLINE GROUP

B

21-ID

LT-EL-SR-EI	LT-EL-SR-EI-PPS-0221-90	E
DRAWING DIRECTORY	DRAWING NUMBER	REV

COMPUTER REPRODUCIBLE | SCALE: N/A | SHEET 34 OF 48

REV	DESCRIPTION	BY	DATE	CHK	APP
	SEE SHEET 1				

LT-EL-SR-EI-PPS-0221-90

THIS PAGE LEFT BLANK

LT-EL-SR-EI DRAWING DIRECTORY	LT-EL-SR-EI-PPS-0221-90 DRAWING NUMBER	E REV
COMPUTER REPRODUCIBLE	SCALE: N/A	SHEET 35 OF 48

REV	DESCRIPTION	BY	DATE	CHK	APP
	SEE SHEET 1				

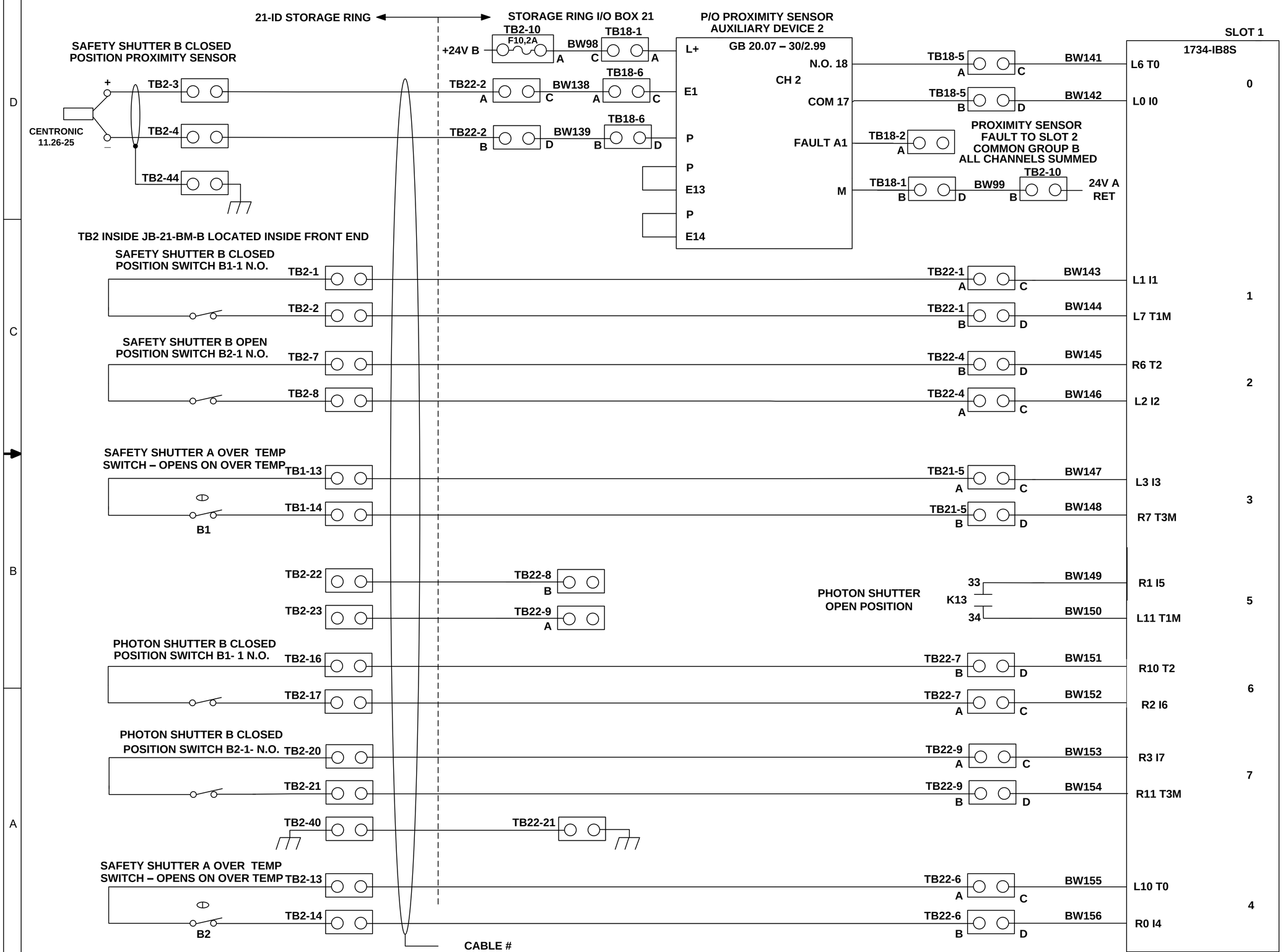

LT-EL-SR-EI-PPS-0221-90

BM BEAMLINE GROUP

B

21-BM

LT-EL-SR-EI	LT-EL-SR-EI-PPS-0221-90	E
DRAWING DIRECTORY	DRAWING NUMBER	REV

COMPUTER REPRODUCIBLE | SCALE: N/A | SHEET 36 OF 48

REV	DESCRIPTION	BY	DATE	CHK	APP
	SEE SHEET 1				

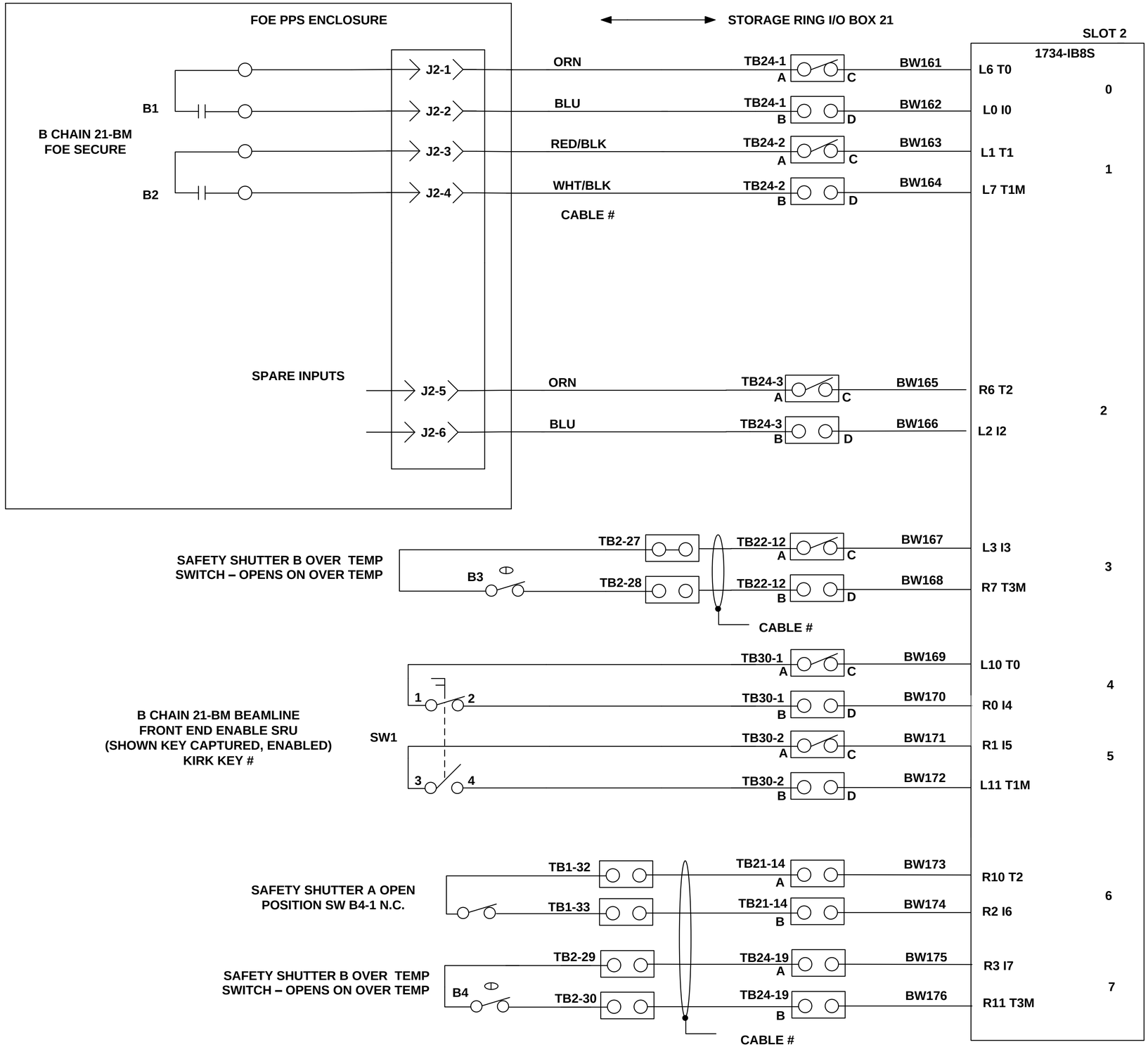

LT-EL-SR-EI-PPS-0221-90

BM BEAMLINE GROUP

B

21-BM

LT-EL-SR-EI	LT-EL-SR-EI-PPS-0221-90	E
DRAWING DIRECTORY	DRAWING NUMBER	REV

COMPUTER REPRODUCIBLE | SCALE: N/A | SHEET 37 OF 48

REV	DESCRIPTION	BY	DATE	CHK	APP
	SEE SHEET 1				

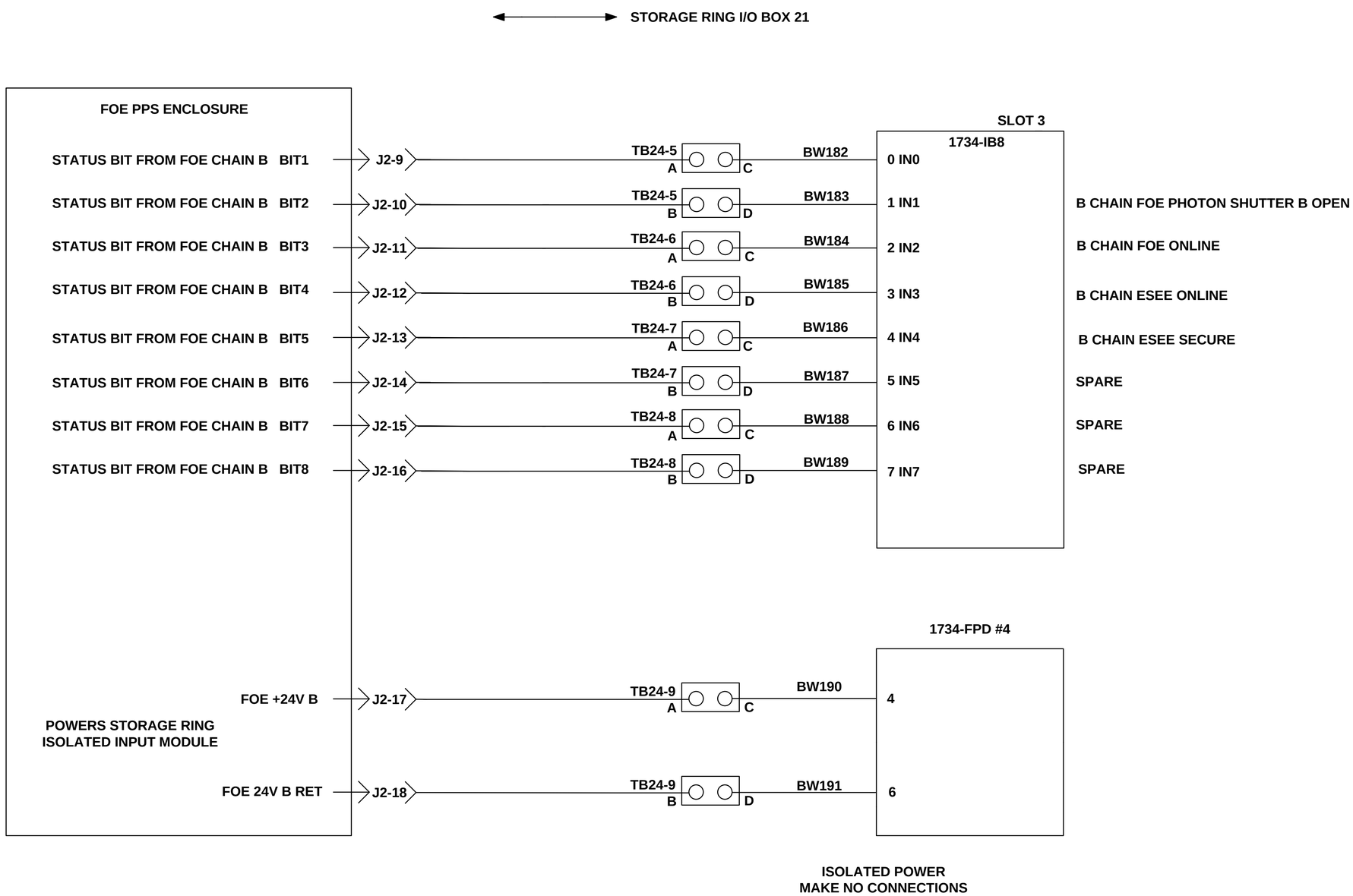

LT-EL-SR-EI-PPS-0221-90

BM BEAMLINE GROUP

B

21-BM

LT-EL-SR-EI (DRAWING DIRECTORY)	LT-EL-SR-EI-PPS-0221-90 (DRAWING NUMBER)	E (REV)
COMPUTER REPRODUCIBLE	SCALE: N/A	SHEET 38 OF 48

REV	DESCRIPTION	BY	DATE	CHK	APP
	SEE SHEET 1				

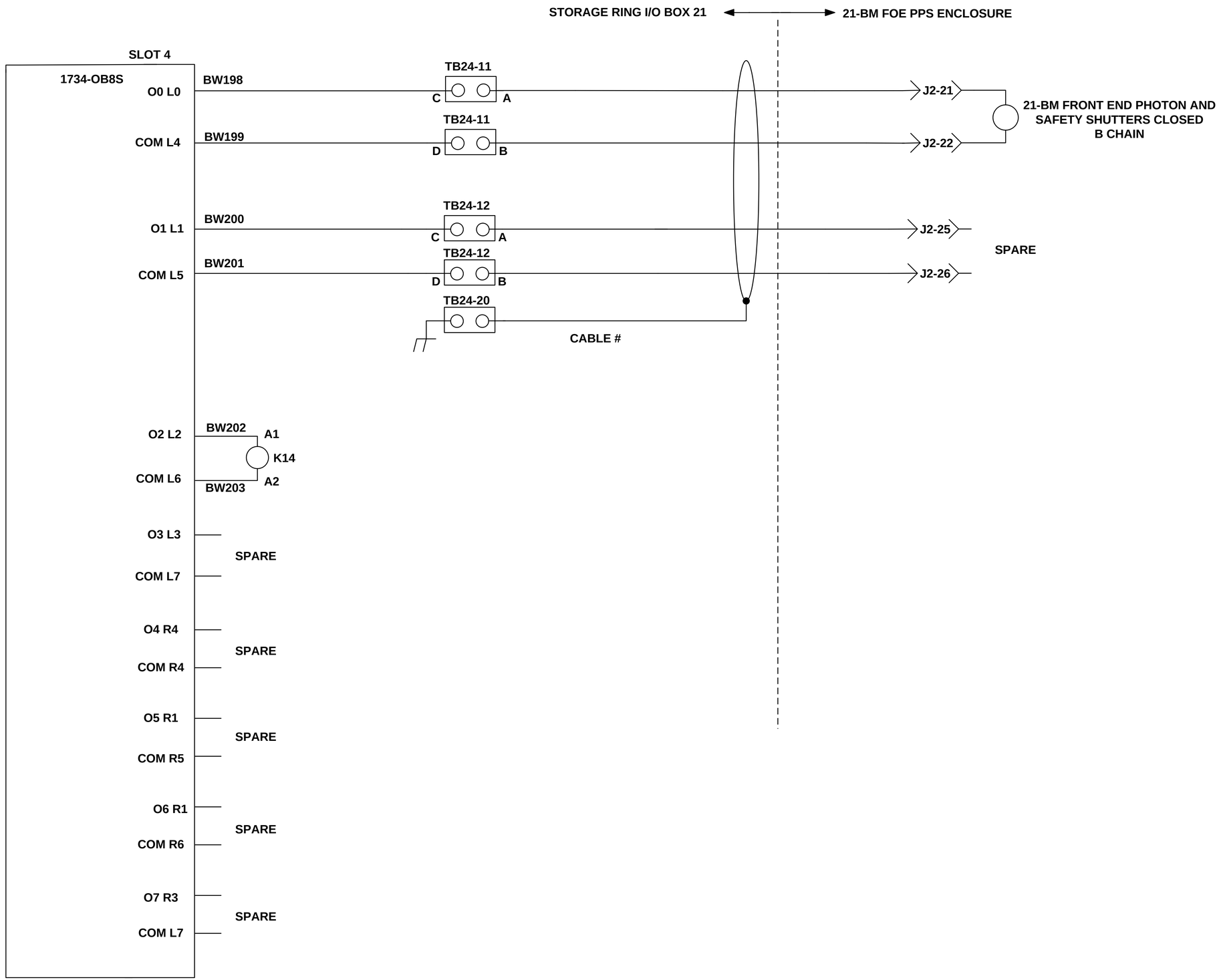

LT-EL-SR-EI-PPS-0221-90

BM BEAMLINE GROUP

B

21-BM

LT-EL-SR-EI	LT-EL-SR-EI-PPS-0221-90	E
DRAWING DIRECTORY	DRAWING NUMBER	REV

COMPUTER REPRODUCIBLE | SCALE: N/A | SHEET 39 OF 48

REV	DESCRIPTION	BY	DATE	CHK	APP
	SEE SHEET 1				

STORAGE RING I/O BOX 21 ⟷ 21-BM FOE PPS ENCLOSURE

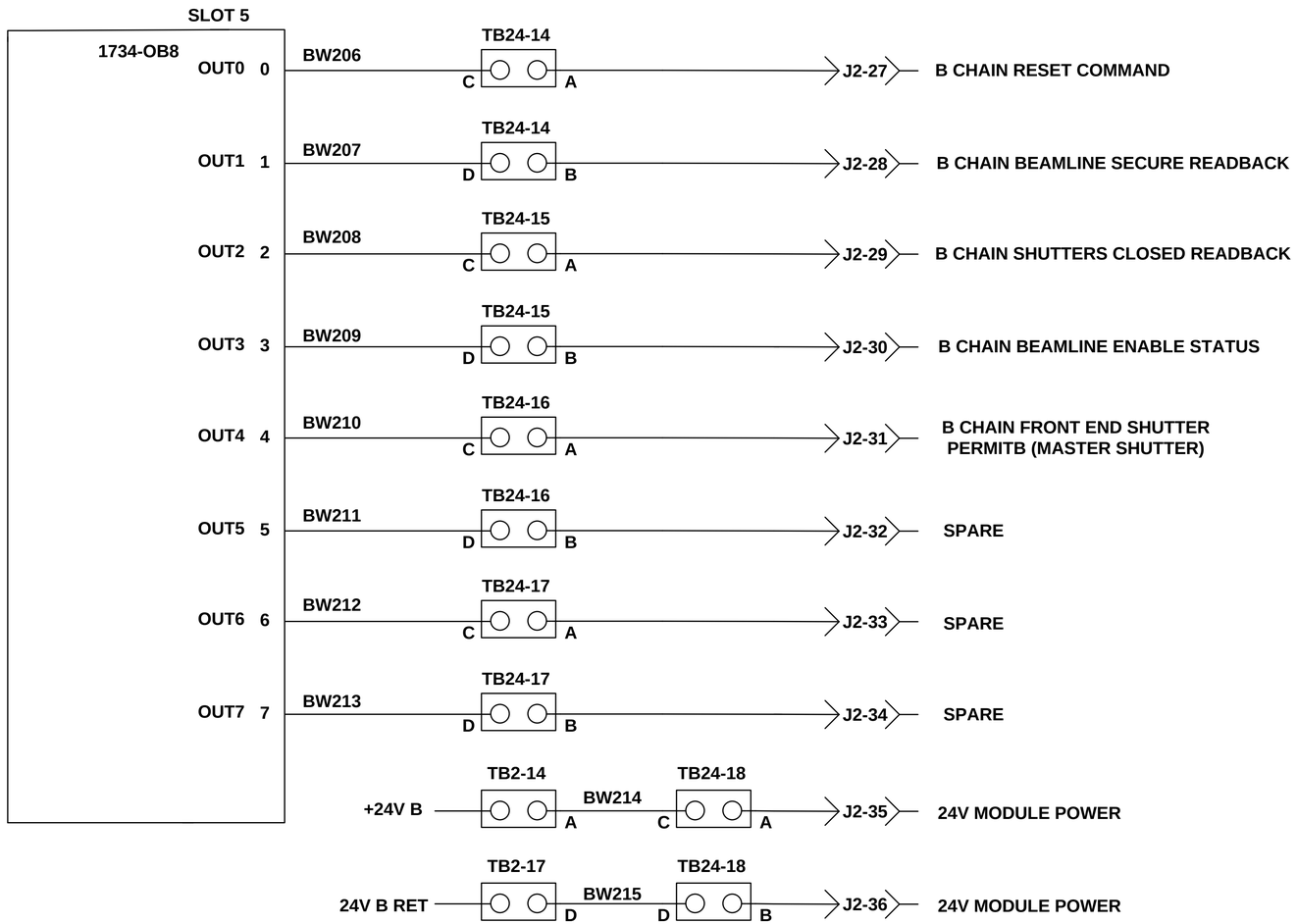

ISOLATED POWER
MAKE NO CONNECTIONS

LT-EL-SR-EI-PPS-0221-90

BM BEAMLINE GROUP

B

21-BM

LT-EL-SR-EI	LT-EL-SR-EI-PPS-0221-90	E
DRAWING DIRECTORY	DRAWING NUMBER	REV
COMPUTER REPRODUCIBLE	SCALE: N/A	SHEET 40 OF 48

REV	DESCRIPTION	BY	DATE	CHK	APP
	SEE SHEET 1				

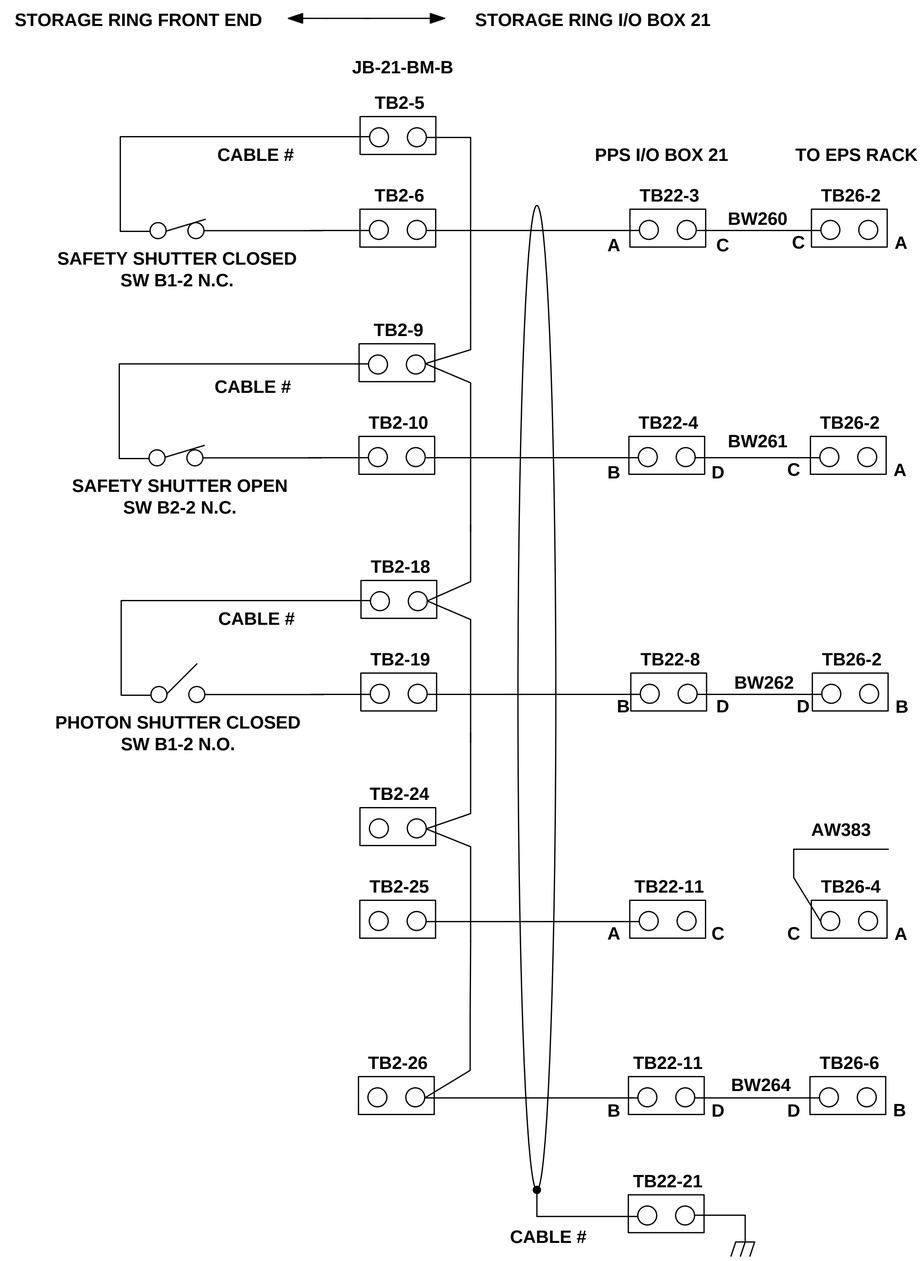

LT-EL-SR-EI-PPS-0221-90

BM BEAMLINE GROUP

B

21-BM

LT-EL-SR-EI	LT-EL-SR-EI-PPS-0221-90	E
DRAWING DIRECTORY	DRAWING NUMBER	REV

COMPUTER REPRODUCIBLE | SCALE: N/A | SHEET 41 OF 48

REV	DESCRIPTION	BY	DATE	CHK	APP
	SEE SHEET 1				

B CHAIN
+24V WIRES ARE BRN
24V RTN WIRES ARE GRY
SIGNAL WIRES ARE BLU

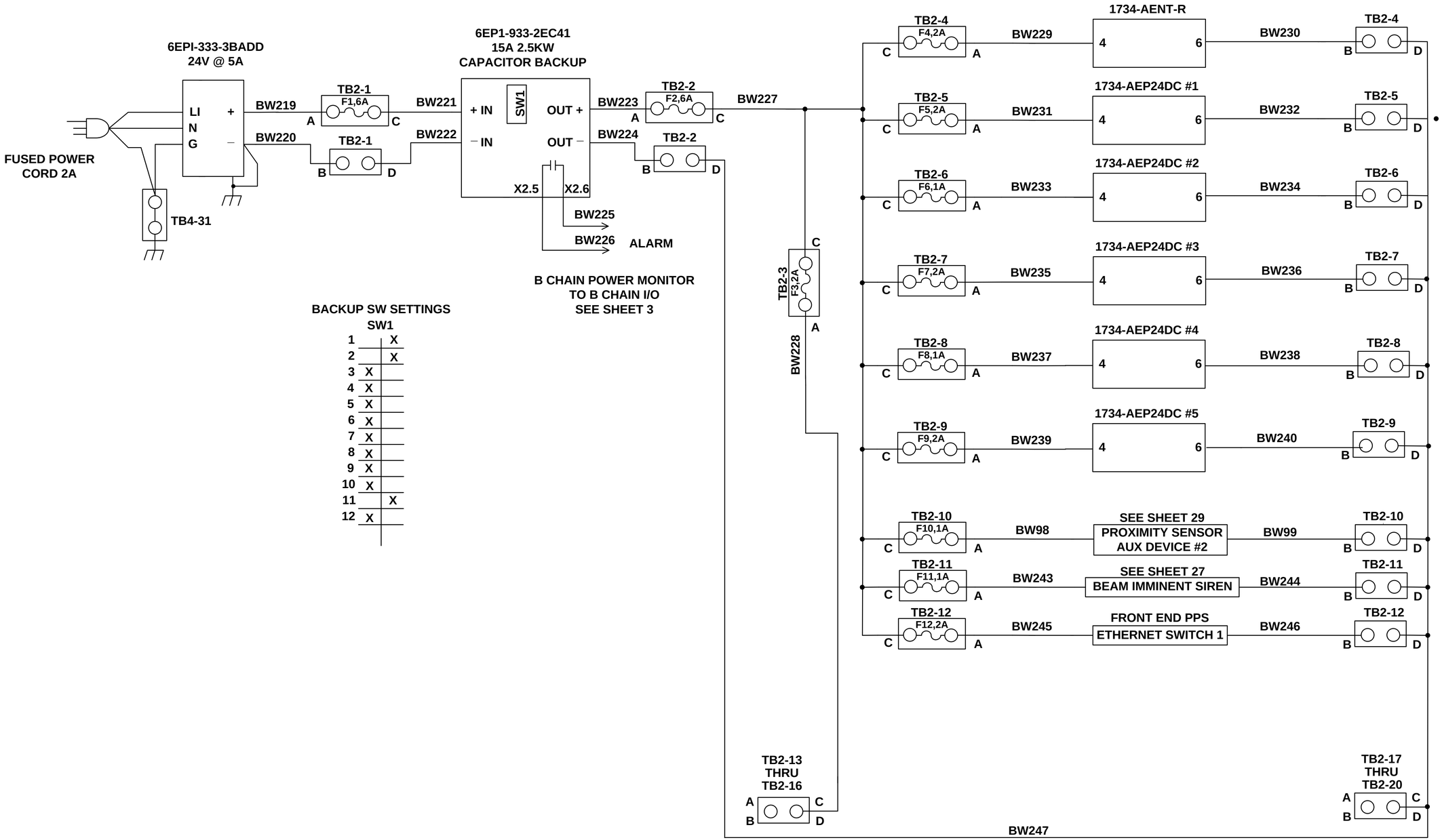

POWER DISTRIBUTION

B

LT-EL-SR-EI-PPS-0221-90

LT-EL-LN-EI (DRAWING DIRECTORY)	LT-EL-SR-EI-PPS-0221-90 (DRAWING NUMBER)	E (REV)
COMPUTER REPRODUCIBLE	SCALE: N/A	SHEET 42 OF 48

REV	DESCRIPTION	BY	DATE	CHK	APP
	SEE SHEET 1				

PPS I/O BOX TERMINAL LAYOUT TYPE 2

TYPE 1 I/O BOX					
ROW 1					
POWER SUPPLIES					
A CHAIN POWER SUPPLY		6EP1 333-3BA00			SIEMENS
A CHAIN CAPACITOR BACKUP		6EP1 333-2EC41			SIEMENS
A CHAIN SWITCH 1		6GK5208-08AI0-2AA3			SIEMENS
A CHAIN SWITCH 2		6GK5208-08AI0-2AA3			SIEMENS
B CHAIN SWITCH 1		1783-US5T			ALLEN BRADLY
B CHAIN POWER SUPPLY		6EP1 333-3BA00			SIEMENS
B CHAIN CAPACITOR BACKUP		6EP1 333-2EC41			SIEMENS
ROW 2					
A CHAIN I/O					
I/O COMMON GROUP A					
SLOT	MODULE	SOCKET	SOCKET		
0	6ES7151-3BA23-0AB0	NA	PN INTERFACE MODULE IM151-3 PN		SIEMENS
1	6ES7138-4CA50-0AB0	6ES7193-4CC20-0AA0	POWER MODULE PM-E		
2	6ES7138-4FA04-0AB0	6ES7193-4CF40-0AA0	4/8FDI 8 SAFE IN		SIEMENS
3	6ES7138-4FA04-0AB0	6ES7193-4CF40-0AA0	4/8FDI 8 SAFE IN		SIEMENS
4	6ES7131-4BF00-0AA0	6ES7193-4CA40-0AA0	8DI 8 STANDARD IN		SIEMENS
5	6ES7132-4BF00-0AA0	6ES7193-4CA40-0AA0	8D0 STANDARD.OUT		SIEMENS
6	6ES7138-4FB03-0AB0	6ES7193-4CF40-0AA0	4FD0 4 SAFE OUT		SIEMENS

LT-EL-SR-EI-PPS-0221-90

REV	DESCRIPTION	BY	DATE	CHK	APP
	SEE SHEET 1				

PPS I/O BOX TERMINAL LAYOUT TYPE 2

I/O ID BEAMLINE GROUP A				
SLOT	MODULE	SOCKET		
0	6ES7151-3BA23-0AB0	NA	PN INTERFACE MODULE IM151-3 PN	SIEMENS
1	6ES7138-4CA50-0AB0	6ES7193-4CC20-0AA0	POWER MODULE PM-E	SIEMENS
2	6ES7138-4FA04-0AB0	6ES7193-4CF40-0AA0	4/8FDI 8 SAFE IN	SIEMENS
3	6ES7138-4FA04-0AB0	6ES7193-4CF40-0AA0	4/8FDI 8 SAFE IN	SIEMENS
4	6ES7131-4BF00-0AA0	6ES7193-4CA40-0AA0	8DI 8 STANDARD IN	SIEMENS
5	6ES7138-4FB03-0AB0	6ES7193-4CF40-0AA0	4FD0 4 SAFE OUT	SIEMENS
6	6ES7132-4BF00-0AA0	6ES7193-4CA40-0AA0	8D0 STANDARD.OUT	SIEMENS
I/O BM BEAMLINE GROUP A				
SLOT	MODULE	SOCKET		
0	6ES7151-3BA23-0AB0	NA	PN INTERFACE MODULE IM151-3 PN	SIEMENS
1	6ES7138-4CA50-0AB0	6ES7193-4CC20-0AA0	POWER MODULE PM-E	SIEMENS
2	6ES7138-4FA04-0AB0	6ES7193-4CF40-0AA0	4/8FDI 8 SAFE IN	SIEMENS
3	6ES7138-4FA04-0AA0	6ES7193-4CF40-0AA0	4/8FDI 8 SAFE IN	SIEMENS
4	6ES7131-4BF00-0AA0	6ES7193-4CA40-0AA0	8DI 8 STANDARD IN	SIEMENS
5	6ES7138-4FB03-0AB0	6ES7193-4CF40-0AA0	4FD0 4 SAFE OUT	SIEMENS
6	6ES7132-4BF00-0AA0	6ES7193-4CA40-0AA0	8D0 STANDARD.OUT	SIEMENS
TB27	4·2 COVER LARGE 3	1>6 1		
TB29	4·2 COVER LARGE 3	1>6 1	END CLAMP 5	

1	3044636
2	3044092
3	3047293
4	3047303
5	1201413
6	EPDDFL4U
7	3044542
8	DDFL-4U
9	3044076
10	3047028
11	3047170

LT-EL-SR-EI-PPS-0221-90

REV	DESCRIPTION	BY	DATE	CHK	APP
	SEE SHEET 1				

PPS I/O BOX TERMINAL LAYOUT TYPE 2

ROW 3						
TB15	END CLAMP 5	4-2 COVER LARGE 3	1>20 1	4-2 COVER SMALL 4	21 2	
TB19	4-2 COVER LARGE 3	1>20 1	4-2 COVER SMALL 4	21 2		
TB21	4-2 COVER LARGE 3	1>20 1	4-2 COVER SMALL 4	21 2		
TB23	4-2 COVER LARGE 3	1>20 1	21 2			
TB25	4-2 COVER LARGE 3	1>5 1 / 6 7 / 7>15 1	16 2			
TB1	FUSE PLATE 6	1>12 8	13>21 7	END CLAMP 5		
			USE JUMPER STRIPS 1>12 AND 13>21			
SPACE FOR AUXILLRY DEVICE 1, A CHAIN		1.125"				
TB17	END CLAMP 5	4-2 COVER LARGE 3	1>6 1	4-2 COVER SMALL 4	END CLAMP 5	
ROW 4						
TB3	END CLAMP 5	4-2 COVER LARGE 3	1>7 1	4-2 COVER SMALL 4	8 2	
TB5	4-2 COVER LARGE 3	1>2 1	4-2 COVER SMALL 4	FUSE PLATE 6	3 8	4 9
TB7	4-2 COVER LARGE 3	1>2 1	4-2 COVER SMALL 4	FUSE PLATE 6	3 8	4 9
TB9	4-2 COVER LARGE 3	1>3 1	4-2 COVER SMALL 4	4 2		
TB11	4-2 COVER LARGE 3	1>3 1	4-2 COVER SMALL 4	4 2		

RELAY	MODULE	SOCKET	
K1	ALTECH 5669	SOCKET SCHRACK RT 78626	A CHAIN HII BEAM IMMINENT SIREN PERMIT
K2	ELESTA SRG282Z	SOCKET SCHRACK RT 78626	A CHAIN HII BEAM IMMINENT SIREN PERMIT
K3	ALTECH 5669	SOCKET SCHRACK RT 78626	A CHAIN HII BEAM IMMINENT BEACON PERMIT

1	3044636
2	3044092
3	3047293
4	3047303
5	1201413
6	EPDDFL4U
7	3044542
8	DDFL-4U
9	3044076
10	3047028
11	3047170

LT-EL-SR-EI-PPS-0221-90

LT-EL-SR-EI (DRAWING DIRECTORY)	LT-EL-SR-EI-PPS-0221-90 (DRAWING NUMBER)	E (REV)
COMPUTER REPRODUCIBLE	SCALE: N/A	SHEET 45 OF 48

REV	DESCRIPTION	BY	DATE	CHK	APP
	SEE SHEET 1				

PPS I/O BOX TERMINAL LAYOUT TYPE 2

RELAY	MODULE	SOCKET	
K7	ALTECH 5669	SOCKET SCHRACK RT 78626	A CHAIN ACCESS PERMIT RELAY
K9	ALTECH 5669	SOCKET SCHRACK RT 78626	A CHAIN LOCK PERMIT
K11	ALTECH 5669	SOCKET SCHRACK RT 78626	A CHAIN ID MASTER SHUTTER RELAY
K13	ELESTA SIM3	SOCKET ELESTA SRD-SIM4	BM PHOTON SHUTTER OPEN FAN OUT RELAY
K15	ALTECH 5669	SOCKET SCHRACK RT 78626	ID REQUEST TO CLOSE SHUTTERS
K17	ALTECH 5669	SOCKET SCHRACK RT 78626	BM REQUEST TO CLOSE SHUTTERS
K4	ELESTA SRG282Z	SOCKET SCHRACK RT 78626	B CHAIN HII BEAM IMMINENT BEACON PERMIT
K5	ELESTA SIM3	SOCKET ELESTA SRD-SIM4	ID PHOTON SHUTTER OPEN FAN OUT RELAY
K6	ELESTA SRG282Z	SOCKET SCHRACK RT 78626	B CHAIN AREA SAFE SIGN PERMIT

TB4	END CLAMP 5	4-2 COVER LARGE 3	1>10 1	4-2 COVER SMALL 4	11 2
TB6	4-2 COVER LARGE 3	1>3 1	4-2 COVER SMALL 4	4 2	
TB8	4-2 COVER LARGE 3	1>3 1	4-2 COVER SMALL 4	4 2	

1	3044636
2	3044092
3	3047293
4	3047303
5	1201413
6	EPDDFL4U
7	3044542
8	DDFL-4U
9	3044076
10	3047028
11	3047170

LT-EL-SR-EI-PPS-0221-90

LT-EL-SR-EI DRAWING DIRECTORY	LT-EL-SR-EI-PPS-0221-90 DRAWING NUMBER	E REV
COMPUTER REPRODUCIBLE	SCALE: N/A	SHEET 46 OF 48

REV	DESCRIPTION	BY	DATE	CHK	APP
	SEE SHEET 1				

PPS I/O BOX TERMINAL LAYOUT TYPE 2

ROW 5					
B CHAIN I/O					
I/O COMMON GROUP B					
SLOT	MODULE	SOCKET (QTY)			
0	1734-AENTR		24V DC ETHERNET ADAPTER		AB
1	1734-IB8S	1734-TOP3 (2)	AB INPUT F 8 SAFETY IN		AB
2	1734-IB8	1734-TB	AB INPUT STANDARD 8 STANDARD IN		AB
3	1734-OBE	1734-TB	8 CHANNEL STANDARD OUT		AB
4	1734-OW4	1734-TB	RELAY MODULE 4 OUTPUT		AB
5	1734-OIB8	1734-TOP3 (2)	AB INPUT F 8 SAFETY OUT		AB
I/O ID BEAMLINE GROUP B					
SLOT	MODULE	SOCKET			
0	1734-AENTR		24V DC ETHERNET ADAPTER		AB
1	1734-IB8S	1734-TOP3 (2)	AB INPUT F 8 SAFETY IN		AB
2	1734-IB8S	1734-TOP3 (2)	AB INPUT F 8 SAFETY IN		AB
3	1734-IB8	1734-TB	AB INPUT STANDARD 8 STANDARD IN		AB
4	1734-OB8S	1734-TOP3 (2)	8 SAFETY OUT		AB
5	1734-OB8	1734-TB	8 CHANNEL STANDARD OUT		AB
I/O BM BEAMLINE GROUP B					
SLOT	MODULE	SOCKET			
0	1734-AENTR		24V DC ETHERNET ADAPTER		AB
1	1734-IB8S	1734-TOP3 (2)	AB INPUT F 8 SAFETY IN		AB
2	1734-IB8S	1734-TOP3 (2)	AB INPUT F 8 SAFETY IN		AB
3	1734-IB8S	1734-TB	AB INPUT STANDARD 8 STANDARD IN		AB
4	1734-IB8	1734-TOP3 (2)	8 SAFETY OUT		AB
5	1734-OB8S	1734-TB	8 CHANNEL STANDARD OUT		AB
TB28	4-2 COVER LARGE 3	1>2 1	4-2 COVER SMALL 4		
TB30	4-2 COVER LARGE 3	1>2 1	4-2 COVER SMALL 4	END CLAMP 5	

1	3044636
2	3044092
3	3047293
4	3047303
5	1201413
6	EPDDFL4U
7	3044542
8	DDFL-4U
9	3044076
10	3047028
11	3047170

LT-EL-SR-EI-PPS-0221-90

LT-EL-SR-EI (DRAWING DIRECTORY)	LT-EL-SR-EI-PPS-0221-90 (DRAWING NUMBER)	E (REV)
COMPUTER REPRODUCIBLE	SCALE: N/A	SHEET 47 OF 48

REV	DESCRIPTION	BY	DATE	CHK	APP
	SEE SHEET 1				

PPS I/O BOX TERMINAL LAYOUT TYPE 2

ROW 6					
TB16	END CLAMP 5	4-2 COVER LARGE 3	1>20 1	4-2 COVER SMALL 4	21 2
TB20	4-2 COVER LARGE 3	1>20 1	4-2 COVER SMALL 4	21 2	
TB22	4-2 COVER LARGE 3	1>20 1	4-2 COVER SMALL 4	21 2	
TB24	4-2 COVER LARGE 3	1>20 1	4-2 COVER SMALL 4	21 2	
TB26	4-2 COVER LARGE 3	1>5 1 / 6 7 / 7>15 1	4-2 COVER SMALL 4	21 2	
TB7	FUSE PLATE 6	1>12 8	13>21 7	END CLAMP 5	
			USE BUSS JUMPER STRIPS 1>12 & 13>21		
SPACE FOR AUXILLARY DEVICE 1,A CHAIN		1.125"			
TB18	END CLAMP 5	4-2 COVER LARGE 3	1>6 1	4-2 COVER SMALL 4	END CLAMP 5
ROW 7 NOT INSTALLED					
TERMINALS					
FUSE 8	DDFL-4U	ALTECH			
FUSE PLATE 6	EPDDFL4U				
		PHOENIX CONTACT			
4 BUSSED 7	3044542	UT 2.5 QUATTRO	4 BUSSED		
4 BUSSED COVER 12	3047170				
1>15 1	3044636	UTTB 2.5	4 TERM 2 CONN		
	3047293				
4	3047303				
SINGLE 9	3044076		SINGLE		
SINGLE COVER 10	3047028				
GROUND 2	3044092				
END CLAMP 5	1201413				

1	3044636
2	3044092
3	3047293
4	3047303
5	1201413
6	EPDDFL4U
7	3044542
8	DDFL-4U
9	3044076
10	3047028
11	3047170

LT-EL-SR-EI-PPS-0221-90

LT-EL-SR-EI (DRAWING DIRECTORY)	LT-EL-SR-EI-PPS-0221-90 (DRAWING NUMBER)	E (REV)
COMPUTER REPRODUCIBLE	SCALE: N/A	SHEET 48 OF 48

NSLS-II Beamline 21-ID Radiological Interlock Test Checklist

Test Reason: 6 month (w/2 month extension - RCD waiver)	Test Result: ☑ Passed ☐ Failed Test Type: ☐ Pre-Certification ☑ Certification ☐ Partial
Test Date: 12/16 – 1/3/2017	Start Time: Finish Time:
Tester 1: Thomas McDonald ; Brian Heneveld	Assistant 1: AD Operations Staff
Tester 2: Robert Chmiel ; Gabrielle Sturse	Assistant 2:
Tester 1 Signature: Thomas McDonald	Tester 2 Signature: Robert Chmiel
*Reviewer 1:	Reviewer 1 Signature:
Reviewer 2:	Reviewer 2 Signature:
** Safety Signature 21-ID (Beamline HMI) A Chain: 5421 503F B Chain: CC 39 C84D	Previous 21-ID SS# Date: 5/25/16 A Chain: 5421503F B Chain: CC39C84D
** Safety Signature Pentant 5 Beamline (SR HMI) A Chain: CD804572 B Chain: 07677 4D9	Previous Pentant 5 SS# Date: 5/25/16 A Chain: 447A6ED7 B Chain: 718CC902

* A review by an Accelerator Safety Systems Engineer and a designated specialist (Reviewer 2) is only required upon a Test failure.
**If Current Safety Signature number (found in top left corner on HMI) is different from previous number, contact the Accelerator Safety Systems Cognizant Engineer.

PREPARATION:

I. All hutch door switches have been evaluated by NSLS-II Engineering for proper positioning	✓
II. Inform Control Room Lead Operator that testing will be done	✓
III. Obtain Beamline enable and PPS reset keys from Control Room	✓
IV. Verify that beamline vacuum and water interlocks are satisfied	✓
V. 21-ID Beamline Staff close isolation vacuum valves in preparation for vacuum sensor test steps	✓
VI. Place muffler on beam imminent sounder	✓
VII. Request Lead Operator enable Master shutters	✓

A1 ***Verify System Lockouts***

Gun HVPS Enable Switch ✓

Linac modulator line cords (3) OR Booster Dipole F PS 480 V ✓

Booster RF HVPS 480 V OR Booster low level RF drive termination ✓

SR System C low level RF drive termination OR SR System C RF output connection to cavity ✓

SR System D low level RF drive termination OR SR System D RF output connection to cavity ✓

A2 ***Verify Search and Time Beam Imminent Alarm***

Verify that search path is free from obstacles and line of sight is clear in search mirrors in accordance with PS-C-XFD-PRC-010, *Beamline Enclosure Search and Secure and Breaking Security Procedure* ✓

	A
Close the Right door	✓
"Entry Permitted" sign is ON	✓
Using the keypad, lock the closed doors	✓
Press SB1	✓
SB1 illuminates	✓
Search sounder sounds	✓
Search yellow beacon flashing	✓
Press SB2	✓
SB2 illuminates	✓
Exit hutch and close main door	✓
*Press SBE and **begin timing***	✓
Beam imminent alarm sounds for 30 seconds	✓
After warning, FOE Interlocked A and B ON (**green**), HMI	✓
"Interlocked" sign is ON	✓
Maglock A and B ON (**green**), all doors, HMI	✓
Press the SBE/Access Button	✓
"Interlocked" sign OFF, "Entry Permitted" sign is ON	✓
FOE Interlocked A and B OFF, HMI	✓
Maglock A OFF (may require opening Maglock on key pad)	✓
Open door	✓
Door opens, Maglock B OFF	✓

A3 ***Out of Sequence Search in the FOE (A Hutch)***

	A
Press SB2	✓
SB2 does not illuminate	✓
Press SB1	✓
SB1 illuminates	✓
Close hutch door and press SBE	✓
Hutch does NOT secure	✓

A4 ***Search Timeout***

	A
Press first search button and ***begin timing***	✓
Complete search ***without pressing Final Search button***	✓
Search sounders off in 2 minutes	✓
Press Final Search button	✓
Search does not complete	✓

A5 ***Shutter Enable***

Place actuators on FOE door switches and attach Maglock devices		✓
	Beamline Online A and B OFF	✓
Enable beamline with key and perform a reset	Beamline Online A and B ON (**green**)	✓
Search the FOE	FE Shutter Permits A and B ON ***after*** Beam Imminent Warning	✓
Open FE Shutters	FE Shutters A and B indicate open (**green**)	✓
	"Beam On" sign is ON	✓
Close FE Shutters	FE Shutters A and B indicate closed (**red**)	✓
Line 1 Enable Key is out of place	L1S1 Shutter A and B Permits OFF, HMI	✓
Cycle Line 1 Key in place	L1S1 Shutter A and B Permits ON (**green**), HMI	✓
Open L1S1 Shutter	L1S1 Shutter A and B indicate open (**green**)	✓
Cycle Line 1 Key out of place	L1S1 Shutter A and B indicate closed (**red**)	✓
	L1S1 Shutter A and B Permits OFF, HMI	✓
Line 2 Enable Key is out of place	L2S2 Shutter A and B Permits OFF, HMI	✓
Cycle Line 2 Key in place	L2S2 Shutter A and B Permits ON (**green**), HMI	✓

Open L2S2 Shutter	L2S2 Shutter A and B indicate open (**green**)	✓
Cycle Line 2 Key out of place	L2S2 Shutter A and B indicate closed (**red**)	✓
	L2S2 Shutter A and B Permits OFF, HMI	✓
Rotate Keys to enable both lines	L1S1 and L2S2 A and B Permits ON (**green**), HMI	✓

A6 ***Emergency Stops (ES) FOE (A Hutch)***

For each ES search FOE hutch	ES1	ES2	ES3
Open FE Shutters from keypad	✓	✓	✓
FE Shutters A and B open (**green**)	✓	✓	✓
FOE Interlocked A and B ON (**green**)	✓	✓	✓
FE Shutter Permit A and B ON (**green**)	✓	✓	✓
FE Critical Device Permits A and B ON	✓	✓	✓
Right Maglock A ON (**green**)	✓	✓	✓
Left Maglock A ON (**green**)	✓	✓	✓
Press ES	✓	✓	✓
FE Shutters A and B closed (**red**)	✓	✓	✓
FOE Interlocked A and B OFF	✓	✓	✓
FE Shutter Permit A and B OFF	✓	✓	✓
FE Critical Device Permits A and B OFF	✓	✓	✓
Right Maglock A OFF	✓	✓	✓
Left Maglock A OFF	✓	✓	✓
Pull out ES	✓	✓	✓
ES Sum Latch OFF	✓	✓	✓
Reset fault	✓	✓	✓
ES Sum Latch ON (**green**)	✓	✓	✓

A7 ***FOE Right Door Switches***

Place actuators on the door switches and Maglock. ✓

Check the corresponding Permits for each switch tested (e.g., A Permit for switch A1).

	A1	A2	B1	B2	Reed
Search hutch	✓	✓	✓	✓	✓
Open FE Shutters from keypad	✓	✓	✓	✓	✓
FE Shutters A and B open (**green**)	✓	✓	✓	✓	✓

FOE Interlocked A and B ON (**green**)	✓	✓	✓	✓	✓
FE Shutter Permit A and B ON (**green**)	✓	✓	✓	✓	✓
FOE Door Switch Sum A and B ON (**green**)	✓	✓	✓	✓	✓
FE Critical Device Permits A and B ON	✓	✓	✓	✓	✓
Remove one switch actuator	✓	✓	✓	✓	✓
FE Shutters A and B closed (**red**)	✓	✓	✓	✓	✓
FOE Interlocked OFF	✓	✓	✓	✓	✓
FE Shutter Permit OFF	✓	✓	✓	✓	✓
FOE Door Switch Sum OFF	✓	✓	✓	✓	✓
FE Critical Device Permits A and B OFF	✓	✓	✓	✓	✓
Replace switch actuator and reset fault	✓	✓	✓	✓	✓
Remove actuators and close door					✓

A8 ***FOE Left Door Switches***

Place actuators on the door switches and Maglock. ✓

Check the corresponding Permits for each switch tested (e.g., A Permit for switch A1).

	A1	**A2**	**B1**	**B2**	**Reed**
Search hutch	✓	✓	✓	✓	✓
Open FE Shutters from keypad	✓	✓	✓	✓	✓
FE Shutters A and B open (**green**)	✓	✓	✓	✓	✓
FOE Interlocked A and B ON (**green**)	✓	✓	✓	✓	✓
FE Shutter Permit A and B ON (**green**)	✓	✓	✓	✓	✓
FOE Door Switch Sum A and B ON (**green**)	✓	✓	✓	✓	✓
FE Critical Device Permits A and B ON	✓	✓	✓	✓	✓
Remove one switch actuator	✓	✓	✓	✓	✓
FE Shutters A and B closed (**red**)	✓	✓	✓	✓	✓
FOE Interlocked OFF	✓	✓	✓	✓	✓
FE Shutter Permit OFF	✓	✓	✓	✓	✓
FOE Door Switch Sum OFF	✓	✓	✓	✓	✓
FE Critical Device Permits A and B OFF	✓	✓	✓	✓	✓
Replace switch actuator and reset fault	✓	✓	✓	✓	✓
Remove actuators and close door					✓

A9 ***Magnetic Lock Test (FOE)***

Connect the FOE test box to the PPS cabinet. Use the box to turn ON the Maglocks (set switches to "Normal"). ✓

Repeat steps for each door: Right (R) and Left (L).

	R	L
Search hutch	✓	✓
FOE Interlocked A and B ON (**green**)	✓	✓
FE Shutter Permit A and B ON (**green**)	✓	✓
Door Maglock A and B ON (**green**)	✓	✓
Open FE Shutters	✓	✓
FE Shutters open (**green**)	✓	✓
Using FOE test box, turn OFF Maglock	✓	✓
Door Maglock A OFF	✓	✓
FE Shutters closed (**red**)	✓	✓
FOE Interlocked A OFF	✓	✓
FE Shutter Permit A OFF	✓	✓
Turn On Maglock and reset fault	✓	✓
Search hutch	✓	✓
Using FE Shutter test fixture, Open FE Shutters	✓	✓
FE Critical Device Permits A and B ON	✓	✓
Using FOE test box, turn OFF Maglock	✓	✓
Within 3 seconds: FE Critical Device Permit A Chain OFF	✓	✓
Close FE Shutters and reset fault	✓	✓
Disconnect FOE test box		✓

A10 ***Vacuum Sensors Beamline 21-ID-1***

Qualified Beamline Staff will perform vacuum venting.

	SW4
Vacuum sensor SW A and B ON (**green**)	✓
L1S1 Shutter A and B Permits ON (**green**)	✓
Open Beamline Photon Shutter L1S1	✓
L1S1 Shutter open (**green**)	✓

Beamline Staff vents up section ✓

Vacuum sensor SW A and B OFF ✓

L1S1 Shutter A and B Permits OFF ✓

L1S1 Shutter closed (**red**) ✓

Beamline Staff returns vacuum ✓

Vacuum sensor SW A and B ON (**green**) ✓

L1S1 Shutter A and B Permits OFF ✓

Reset fault ✓

L1S1 Shutter A and B Permits ON (**green**) ✓

Open Beamline Photon Shutter L1S1 ✓

L1S1 Shutter open (**green**) ✓

A11 ***Vacuum Sensors Beamline 21-ID-2***

Qualified Beamline Staff will perform vacuum venting.

SW5

Vacuum sensor SW A and B ON (**green**) ✓

L2S2 Shutter A and B Permits ON (**green**) ✓

Open Beamline Photon Shutter L2S2 ✓

L2S2 Shutter open (**green**) ✓

Beamline Staff vents up section ✓

Vacuum sensor SW A and B OFF ✓

L2S2 Shutter A and B Permits OFF ✓

L2S2 Shutter closed (**red**) ✓

Beamline Staff returns vacuum ✓

Vacuum sensor SW A and B ON (**green**) ✓

L2S2 Shutter A and B Permits OFF ✓

Reset fault ✓

L2S2 Shutter A and B Permits ON (**green**) ✓

Open Beamline Photon Shutter L2S2 ✓

L2S2 Shutter open (**green**) ✓

A12 ***Vacuum Sensors Beamline 21-ID FOE Shutter***

Qualified Beamline Staff will perform vacuum venting.

Perform steps for each vacuum sensor	SW1	SW2	SW3	
Vacuum sensor SW A and B ON (**green**)	✓	✓	✓	
FOE Shutter A and B Permits ON (**green**)	✓	✓	✓	
Open FOE Shutter	✓	✓	✓	
FOE Shutter open (**green**)	✓	✓	✓	
Beamline Staff vents up section	✓	✓	✓	
Vacuum sensor SW A and B OFF	✓	✓	✓	
FOE Shutter A and B Permits OFF	✓	✓	✓	
FOE Shutter closed (**red**)	✓	✓	✓	
Beamline Staff returns vacuum	✓	✓	✓	
Vacuum sensor SW A and B ON (**green**)	✓	✓	✓	
FOE Shutter A and B Permits OFF	✓	✓	✓	See **A13**
Reset fault	✓	✓	✓	
FOE Shutter A and B Permits ON (**green**)	✓	✓	✓	
Open FOE Shutter	✓	✓	✓	
FOE Shutter open (**green**)	✓	✓	✓	

A13 ***Vacuum Sensors to FE Permits (use one sensor)***

Qualified Beamline Staff will perform vacuum venting.

FE Shutter Permits A and B ON (**green**)	✓
While FOE Shutter Permits OFF (Step A12), Open FOE Shutter using the FOE test box	✓
FE Shutter Permits A and B OFF	✓
Close FOE Shutter and reset fault	✓
Remove FOE test box	✓

A14 ***Water Interlock***

Water flow meters for PPS 1, 2 and 3 are located on top of the hutch (Figure 1). Water flow meters for PPS 4 and 5 are further downstream on the beamline.

Figure 1: Water Flow Meters (PPS 1, 2, and 3)

The PPS Water Safety Test Amplifiers (STA) are located in the cabinet to the upper right of the meters on top of the hutch (Figure 2).

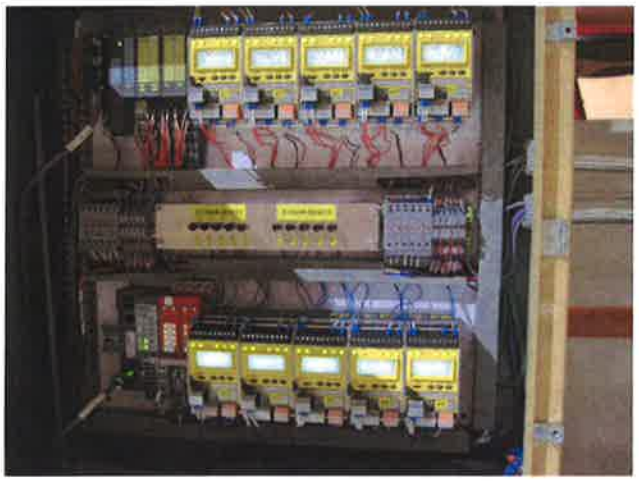

Figure 2: PPS Water STAs

Record the pretest water flows for the PPS meters in GPM.

Meter Reading	Meter Reading	Current STA A	Current STA B
A1= 1.05	B1= 1.03	A STA1= 1.05	B STA1= 1.03
A2= 0.94	B2= 0.94	A STA2= 0.94	B STA2= 0.94
A3= 1.68	B3= 1.72	A STA3= 1.68	B STA3= 1.72
A4= 0.93	B4= 0.93	A STA4= 0.93	B STA4= 0.925
A5= 0.52	B5= 0.5	A STA5= 0.52	B STA5= 0.52

The current programmed trip settings for the amplifiers are in column 1. The STA readouts for each tested A and B chain STAs will be recorded in columns 3 and 4. These recordings should be within 15% of the programmed trip point (column 2).

Trip Points	Trip Points (- 15 %)	Recorded A Trip	Recorded B Trip
PPS 1: 1.0 GPM	0.85 GPM	A STA1= 1.0	B STA1= 1.0
PPS 2: 0.7 GPM	0.6 GPM	A STA2= 0.7	B STA2= 0.7
PPS 3: 1.2 GPM	1.0 GPM	A STA3= 1.2	B STA3= 1.2
PPS 4: 0.7 GPM	0.6 GPM	A STA4= 0.7	B STA4= 0.7
PPS 5: 0.4 GPM	0.34 GPM	A STA5– 0.4	B STA5– 0.4

Repeat each step for all water flow meters	PPS1	PPS2	PPS3	PPS4	PPS5
Open FE Shutters	✓	✓	✓	✓	✓
FE Shutters A and B open (**green**)	✓	✓	✓	✓	✓
Water Permits A and B ON (**green**), HMI	✓	✓	✓	✓	✓
FE Shutter Permits A and B ON (**green**), HMI	✓	✓	✓	✓	✓
Using the valve, lower water flow to trip point	✓	✓	✓	✓	✓
FE Shutters A and B closed (**red**)	✓	✓	✓	✓	✓
In 5 seconds: FE Shutter Permits A and B OFF, HMI	✓	✓	✓	✓	✓
Water Permits A and B OFF, HMI	✓	✓	✓	✓	✓
Recorded STA A and B levels above within 15%	✓	✓	✓	✓	✓
Return water flow to pretest values	✓	✓	✓	✓	✓
Water Permits A and B remain OFF, HMI	✓	✓	✓	✓	✓
Reset fault at PPS cabinet	✓	✓	✓	✓	✓
Water Permits A and B ON (**green**), HMI	✓	✓	✓	✓	✓
FE Shutter Permits A and B ON (**green**), HMI	✓	✓	✓	✓	✓

A15 ***Water Safety Test Amplifier Faults***

Repeat each step for all water flow meters

	PPS1	PPS2	PPS3	PPS4	PPS5
Open FE Shutters with keypad	✓	✓	✓	✓	✓
FE Shutters A and B open (**green**)	✓	✓	✓	✓	✓
Water Permits A and B ON (**green**), HMI	✓	✓	✓	✓	✓

FE Shutter Permits A and B ON (**green**), HMI	✓	✓	✓	✓	✓
Press A chain fault/reset button	✓	✓	✓	✓	✓
FE Shutters A and B closed (**red**)	✓	✓	✓	✓	✓
Water Permit A OFF, HMI	✓	✓	✓	✓	✓
In 5 seconds: FE Shutter Permit A OFF, HMI	✓	✓	✓	✓	✓
Reset fault	✓	✓	✓	✓	✓
Open FE Shutters with keypad	✓	✓	✓	✓	✓
FE Shutters A and B open (**green**)	✓	✓	✓	✓	✓
Water Permits A and B ON (**green**), HMI	✓	✓	✓	✓	✓
FE Shutter Permits A and B ON (**green**), HMI	✓	✓	✓	✓	✓
Press B chain fault/reset button	✓	✓	✓	✓	✓
FE Shutters A and B closed (**red**)	✓	✓	✓	✓	✓
Water Permit B OFF, HMI	✓	✓	✓	✓	✓
In 5 seconds: FE Shutter Permit B OFF, HMI	✓	✓	✓	✓	✓
Reset fault	✓	✓	✓	✓	✓

A16 ***Observe Beamline Photon Shutter Operation***

	FOE	L1S1	L2S2
Close Beamline Photon Shutter	✓	✓	✓
Shutter indicates closed A and B (**red**), HMI	✓	✓	✓
Open Beamline Photon Shutter	✓	✓	✓
Shutter opens smoothly without hesitation	✓	✓	✓
Shutter indicates open A and B (**green**), HMI	✓	✓	✓
Close Beamline Photon Shutter	✓	✓	✓
Shutter indicates closed A and B (**red**), HMI	✓	✓	✓

A17 ***Observe FE Safety Shutter(s) Operation***

With Maintenance Door open, connect FE Shutter test fixture.		✓
	Shutters are in the closed (down) position	✓
	FE Shutters A and B closed (**red**), HMI	✓
Turn the "Air" switch ON		✓
Open FE Photon Shutter and SSs A and B	Shutters open freely without hesitation	✓

	Shutters are in the open (up) position	✓
	FE Shutters A and B open (**green**), HMI	✓
Actuate Shutters closed	FE Shutters A and B closed (**red**), HMI	✓

A18 ***FE Safety Shutters can only be Closed if FE Photon Shutter is Closed***

Search hutch	FOE Interlocked A and B ON (**green**), HMI	✓
	FE Critical Device Permits A and B ON (**green**), HMI	✓
Open FE SSA	SSA Open	✓
Open FE Photon Shutter	FE Critical Device Permits A and B OFF, HMI	✓
Close Shutters		✓
Reset fault	FE Critical Device Permits A and B ON (**green**), HMI	✓
Open FE SSB	SSB Open	✓
Open FE Photon Shutter	FE Critical Device Permits A and B OFF, HMI	✓
Close Shutters		✓
Reset fault	FE Critical Device Permits A and B ON (**green**), HMI	✓

A19 ***Beamline Enable Key (Opening Shutter without key trips SR RF and Dipole PS)***

Remove beamline enable key	Beamline Online A and B OFF	✓
Search FOE	FOE Interlocked A and B ON (**green**), HMI	✓
	FE Critical Device Permits A and B ON (**green**), HMI	✓
Using FE Shutter test fixture, Open FE Shutters	FE Critical Device Permits A and B OFF	✓
Using FE Shutter test fixture, Close FE Shutters		✓
Replace beamline enable key and reset faults	Beamline Online A and B ON (**green**)	✓

Live Testing

A20 ***Reach Back FOE Door Switches***

Secure P1 through P5	SR Secure, A and B chain, SR HMI	✓
Place actuators on FOE hutch door switches and Maglock		✓
Search hutch	FOE Interlocked A and B ON (**green**), HMI	✓
	FE Critical Device Permits A and B ON (**green**), HMI	✓
Check Control Room SR HMI (MCR beamline 1)	FE Critical Device Permit A and B ON (**green**), SR HMI	✓

Check I/O Box 21 Beamline Enable Panel	FE Critical Device Permits A and B LEDs ON	✓
Check I/O Box 28 Beamline Enable Panel	FE Critical Device Permit Sum A and B LEDs ON	✓
Check Dipole PS (positive) Beamline Interface	A and B Permits ON, Dipole PS Pos. Interface	✓
Check Dipole PS (negative) Beamline Interface	A and B Permits ON, Dipole PS Neg. Interface	✓
Check SR RF System C HVPS Beamline Interface	A and B Permits ON, SR RF System C HVPS Interface	✓
Check SR RF System D HVPS Beamline Interface	A and B Permits ON, SR RF System D HVPS Interface	✓
Operator enables SR Dipole PS	SR Dipole PS is ON	✓
Operator enables SR RF System C HVPS	SR RF System C HVPS is ON	✓
Operator enables SR RF System D HVPS	SR RF System D HVPS is ON	✓
Using FE Shutter test fixture, open the FE Shutters (SSA, SSB and Photon)		✓
	FE Shutters open	✓
*Remove an "**A chain**" door switch actuator from beamline hutch door*		✓
	FOE Interlocked A OFF, HMI	✓
	FE Critical Device Permit A OFF, HMI	✓
Check I/O Box 21 Beamline Enable Panel	FE Critical Device Permit A LED OFF	✓
Check I/O Box 28 Beamline Enable Panel	FE Critical Device Permit Sum A LED OFF	✓
Check Control Room SR HMI (MCR beamline 1)	FE Critical Device Permit A OFF (**red**), SR HMI	✓
Check SR RF System C HVPS Beamline Interface	A Permit OFF, SR RF System C HVPS Interface	✓
Check SR RF System D HVPS Beamline Interface	A Permit OFF, SR RF System D HVPS Interface	✓
Check Dipole PS (positive) Beamline Interface	A Permit OFF, Dipole PS Pos. Interface	✓
Check Dipole PS (negative) Beamline Interface	A Permit OFF, Dipole PS Neg. Interface	✓
	SR RF System C HVPS is OFF	✓
	SR RF System D HVPS is OFF	✓
	SR Dipole PS is OFF	✓
Close FE Shutters with FE Shutter test fixture	FE Shutters closed	✓
Replace "***A chain***" door switch actuator and reset fault(s)		✓
Search hutch		✓

	FOE Interlocked A and B ON (**green**), HMI	✓
	FE Critical Device Permits A and B ON (**green**), HMI	✓
Check Control Room SR HMI (MCR beamline 1)	FE Critical Device Permit A and B ON (**green**), SR HMI	✓
Check I/O Box 21 Beamline Enable Panel	FE Critical Device Permits A and B LEDs ON	✓
Check I/O Box 28 Beamline Enable Panel	FE Critical Device Permit Sum A and B LEDs ON	✓
Check Dipole PS (positive) Beamline Interface	A and B Permits ON, Dipole PS Pos. Interface	✓
Check Dipole PS (negative) Beamline Interface	A and B Permits ON, Dipole PS Neg. Interface	✓
Check SR RF System C HVPS Beamline Interface	A and B Permits ON, SR RF System C HVPS Interface	✓
Check SR RF System D HVPS Beamline Interface	A and B Permits ON, SR RF System D HVPS Interface	✓
Operator enables SR Dipole PS	SR Dipole PS is ON	✓
Operator enables SR RF System C HVPS	SR RF System C HVPS is ON	✓
Operator enables SR RF System D HVPS	SR RF System D HVPS is ON	✓
Using FE Shutter test fixture, open the FE Shutters (SSA, SSB and Photon)		✓
	FE Shutters open	✓
Remove "***B chain***" switch actuator	FOE Interlocked B OFF, HMI	✓
	FE Critical Device Permit B OFF, HMI	✓
Check I/O Box 21 Beamline Enable Panel	FE Critical Device Permit B LED OFF	✓
Check Control Room SR HMI (MCR beamline 1)	FE Critical Device Permit B OFF (**red**), SR HMI	✓
Check I/O Box 28 Beamline Enable Panel	FE Critical Device Permit Sum B LED OFF	✓
Check SR RF System C HVPS Beamline Interface	B Permit OFF, SR RF System C HVPS Interface	✓
Check SR RF System D HVPS Beamline Interface	B Permit OFF, SR RF System D HVPS Interface	✓
Check Dipole PS (positive) Beamline Interface	B Permit OFF, Dipole PS Pos. Interface	✓
Check Dipole PS (negative) Beamline Interface	B Permit OFF, Dipole PS Neg. Interface	✓
	SR Dipole PS is OFF	✓
	SR RF System C HVPS is OFF	✓
	SR RF System D HVPS is OFF	✓
Close FE Shutters with FE Shutter test fixture	FE Shutters closed	✓
Remove beamline hutch switch actuators and Maglock actuator		✓

A21 ***Water Interlock (Live)***

Search FOE	FOE Interlocked A and B ON (**green**), HMI	✓
	FE Shutter Permits A and B ON (**green**), HMI	✓
	FE Critical Device Permits A and B ON (**green**), HMI	✓
Check I/O Box 21 Beamline Enable Panel	FE Critical Device Permits A and B LEDs ON	✓
Check I/O Box 28 Beamline Enable Panel	FE Critical Device Permit Sum A and B LEDs ON	✓
Check Control Room SR HMI (MCR beamline 1)	FE Critical Device Permit A and B ON (**green**), SR HMI	✓
Check Dipole PS (positive) Beamline Interface	A and B Permits ON, Dipole PS Pos. Interface	✓
Check Dipole PS (negative) Beamline Interface	A and B Permits ON, Dipole PS Neg. Interface	✓
Check SR RF System C HVPS Beamline Interface	A and B Permits ON, SR RF System C HVPS Interface	✓
Check SR RF System D HVPS Beamline Interface	A and B Permits ON, SR RF System D HVPS Interface	✓
Operator enables SR Dipole PS	SR Dipole PS is ON	✓
Operator enables SR RF System C HVPS	SR RF System C HVPS is ON	✓
Operator enables SR RF System D HVPS	SR RF System D HVPS is ON	✓
Using FE Shutter test fixture, turn on air and open Photon then SSs		
	FE Shutters indicate open (**green**), HMI	✓
Using water trip points in Step A14, lower flow to one meter		✓
	Water Permits A and B OFF, HMI	✓
	FE Shutter Permits A and B OFF, HMI	✓
Within 5 seconds	FE Critical Device Permits A and B OFF, HMI	✓
Check I/O Box 21 Beamline Enable Panel	FE Critical Device Permits A and B OFF	✓
Check I/O Box 28 Beamline Enable Panel	FE Critical Device Permit Sum A and B LEDs OFF	✓
Check Control Room SR HMI (MCR beamline 1)	FE Critical Device Permit A and B OFF, SR HMI	✓
Check SR RF System C HVPS Beamline Interface	A and B Permits OFF, SR RF System C HVPS Interface	✓
Check SR RF System D HVPS Beamline Interface	A and B Permits OFF, SR RF System D HVPS Interface	✓
Check Dipole PS (positive) Beamline Interface	A and B Permits OFF, Dipole PS Pos. Interface	✓
Check Dipole PS (negative) Beamline Interface	A and B Permits OFF, Dipole PS Neg. Interface	✓
	SR RF System C HVPS is OFF	✓

	SR RF System D HVPS is OFF	✓
	SR Dipole PS is OFF	✓
Close FE Shutters with FE Shutter test fixture	FE Shutters closed	✓
Return water flow to recorded level		✓
Reset fault(s)		✓

A22 ***Observe All Shutters Closed Sum***

Check I/O Box 28 Beamline Enable Panel	FE Shutters closed A chain light ON	✓
	FE Shutters closed B chain light ON	✓
Using FE Shutter test fixture open both FE SSs and then Photon Shutter		✓
	FE Shutters open (**green**), HMI	✓
Check I/O Box 28 Beamline Enable Panel	FE Shutters closed A chain light OFF	✓
	FE Shutters closed B chain light OFF	✓
Close FE Shutters and remove FE Shutter test fixture		✓

A23 ***FOE Area Radiation Monitor***

Refer to PS-C-ASD-PRC-008, *NSLS-II Area Radiation Monitor PPS Test* and complete Attachment D, *NSLS-II Beamline (FOE) Area Radiation Monitor Checklist.*

	FRM 21-ID Test Checklist Completed	✓

A24 ***Test Completion***

Inspect all hutch doors and labyrinths to ensure all PPS switch and Maglock actuators have been removed	✓
Return Beamline enable key and Beamline PPS reset key to the Control Room	✓
Remove muffler from beam imminent sounder	✓
Ensure PPS cabinets are secure and locked; challenge locks	✓
Remove all LOTO	✓
Inform Lead Operator that testing is complete	✓

-END-

Reviewed by:

X

Scott Buda
Accelerator Safety Systems Group Leader

12/22/2016

X Robert Chmiel

Robert Chmiel
NSLS-II Safety Oficer
Signed by: Chmiel, Robert

Approved by:

12/22/2016

X

Robert Lee
NSLS-II ESH Manager
Signed by: Lee, Robert J

Revision History

Revision	Description	Date
1	First Issue.	23DEC2016

The only official copy of this document is the one online in the SharePoint Document Center. Before using a printed copy, verify that it is current by checking the printed document's version history log (p.ii) with that of the online version.

Attachment D
NSLS-II Beamline (FOE) Area Radiation Monitor Checklist

Note: Signatures below indicate that the test has been completed.

Monitor # ERM-ID21	**ID #** EN07575 Det# IN07472	**Beamline:** 21 ID
Test Reason: ☑ **Beamline Certification**	☐ **Replacement/Repair**	
Test Date: 12/28 - 12/30/16	**Test Result** ☑ **Passed**	☐ **Failed**
Tester : Thomas McDonald	**RCD:** SHAWN BUCKALEW	
Tester Signature: Thomas McDonald	**RCD Signature:**	

Fail Alarm: Place checkmark (✓) in checkbox (☐) for each correct response.

	Local Expected Observation	**HMI/CR Expected Observation**	**Linac HMI**	**CR HMI**
Operator turns on Gun	Gun HVPS is ON ☑	Gun Contactor ON A Chain	☑	☑
RCD Disables Monitor		Alarm sounds in Control Room		☑
	Fail alarm ON HMI (yellow border around ARM icon)		☑	☑
Silence CR Alarm		Alarm silences		☑
Gun turns OFF	Gun HVPS is OFF ☑	Gun Contactor OFF A Chain	☑	☑
Return monitor to normal	Gun HVPS remains OFF ☑	Fail alarm remains ON HMI	☑	☑
Reset fault in Control Room		Monitor normal HMI	☑	☑
RCD ensures ARM is locked	ARM is locked ☑			

Low Alarm: Place checkmark (✓) in checkbox (☐) for each correct response.

	Local Expected Observation	**HMI/CR Expected Observation**	Beamline HMI	CR HMI/EPICS
Opens FE shutter (w/keypad)	FE Shutters open ☑		☑	☑
Apply source until low alarm	Yellow light on Monitor ☑	Radiation level increases on EPICS		☑
	FE Shutters Closed ☑	Alarm sounds in Control Room		☑
		Low level alarm ON, HMI	☑	☑
Return monitor to normal		Monitor normal, HMI	☑	☑
	FE Critical Device Permit A chain ON		☑	☑
Apply source until low alarm	Yellow light on Monitor ☑			☑
	FE Critical Device Permit A chain OFF		☑	☑
Return monitor to normal		Monitor normal, HMI	☑	☑

High Alarm: Place checkmark (✓) in checkbox (☐) for each correct response.

	Local Expected Observation	**HMI/CR Expected Observation**	**Linac HMI**	**CR HMI/EPICS**
Operator turns on Gun	Gun HVPS is ON ☑	Gun Contactor ON A Chain	☑	☑
Apply source until high alarm	Red light on Monitor ☑	Radiation level increases on EPICS		☑
	Monitor alarm sounds	Alarm sounds in Control Room		☑
		High level alarm ON, HMI	☑	☑
Silence Alarm		Alarm silences		☑
Gun turns OFF	Gun HVPS is OFF ☑	Gun Contactor OFF A Chain	☑	☑
Return monitor to normal	Gun HVPS remains OFF ☑	High level alarm remains ON, HMI	☑	☑
Reset fault in Control Room		Monitor normal, HMI	☑	☑

Description of Test Failures (if any):_____

NSLS II 21-ID ESM Beam Line Personal Protection System Certification Validation Check List
G. Ganetis 6/20/2016

ECNs required during Certification using Small Change Procedure	None		
Deviation Reports on Installed system	None		
Configuration Control 21-ID Chain A PPS Front End P5 Program Stored 21-ID Chain B PPS Front End P5 Program Stored 21-ID Chain A PPS Beamline Program Stored 21-ID Chain B PPS Beamline Program Stored	 LT-EL-BL-EI-PPS-0101-74_REV-D.pdf LT-EL-BL-EI-PPS-0101-84_REV-C.pdf LT-EL-BL-EI-PPS-0210-70_REV-A.pdf LT-EL-BL-EI-PPS-0210-71_REV-A.pdf		This section contains the new system storing the PLC program in the Electrical Design room

Evaluator _____ _____ Date _____
Print Name Signature