Reference Documents:

Reference Number	Date/ Issue	Title
SB1341-14-CN-0042-PART II	19/09/14	NIST Contract
	04/04/12	Reducing the beam divergence and suppressing higher orders at the BMM beamline. Ruben Reininger
E3160	April 2014	NIST NSLS-II SST and BMM Beamline Backbones, Volume 2B, BMM Technical Proposal
S3160	Nov 2014/REV 01	NIST SST BEAMLINE S3160 QUALITY PLAN

FMB Oxford Osney Mead Oxford OX2 0ES UK	Contact: Telephone: Fax: E-mail:	Andrew Fairley +44 (0)1865 320 313 +44 (0)1865 320 301 andrew.fairley@fmb-oxford.com

Change log:

Revision	Date	Summary of Change	Approval
1.0	11/11/14	First Issue	NJB
2.0	08/01/15	Reference document list updated + minor updates	NJB
3.0	27/02/15	Mask FEA updated. Binder layers not permitted.	NJB
4.0	22/04/15	Port table updates to relocate outboard ports.	AJF
5.0	11/06/15	DN63 spare port changed to DN150.Fig 1 updated.	AJF
6.0			

TABLE OF CONTENTS **1**

1. INTRODUCTION **3**

1.1 COORDINATE SYSTEM 4

2. SPECIFICATIONS **5**

2.1 MIRROR SYSTEM 5

2.1.1 M1 Mirror Optic *5*

2.2 M1 MIRROR MASK 6

2.3 MIRROR COOLING 7

2.4 MIRROR COOLING LINES 8

2.5 MANUAL MOTIONS 9

2.6 MOTORISED MOTIONS 10

2.7 VACUUM SYSTEM 13

2.8 VACUUM VESSEL 13

2.9 ELECTRICAL DATA 15

2.9.1 Vertical (in air) Actuators *15*

2.9.2 Lateral (in air) Translation *16*

2.9.3 Thermocouples *16*

2.9.4 Electrical Interfacing *16*

2.10 UTILITIES 17

2.11 LIFTING POINTS 17

2.12 ALIGNMENT FEATURES 17

3. FACTORY TESTING **18**

4. INSTALLATION AND UNIT ACCEPTANCE **19**

5. DESIGN STANDARDS AND MANUFACTURING PROCEDURES **20**

6. SCOPE OF SUPPLY **21**

7. APPENDIX **22**

7.1 AXIS NAMING CONVENTION 22

7.2 GLOSSARY 22

1. INTRODUCTION

The M1 mirror system is the first component in the BMM beamline, and is located in the front end, inside the shield wall (with the centre of the optic at 13m from the source). The purpose the M1 mirror system is to collimate the beam before sending it downstream to the diagnostic module and the DCM. The M1 optic is a slot cooled paraboloid and is arranged in a bounce up configuration. The mirror cooling blades sit in an indium-galium mix located in recesses in the optic.

It should be noted that the accelerator tunnel floor inside the shield wall is at a height of 200mm above the experimental hall floor, where the remainder of the beamline is located.

The optic assembly is mounted on in air lateral translations (one at each end) which allow the optic to be moved laterally in addition to providing yaw adjustment. Vertical translation, pitch and roll are achieved using three in-air vertical jacks mounted on the synthetic granite plinth (two located at one end, one at the other (beam in) end). The optic assembly is decoupled from the vessel via edge welded bellows. All motors are fitted with encoders for position feedback and limit switches to protect from overtravel. The encoders will be shielded with 10 mm thick Pb covers.

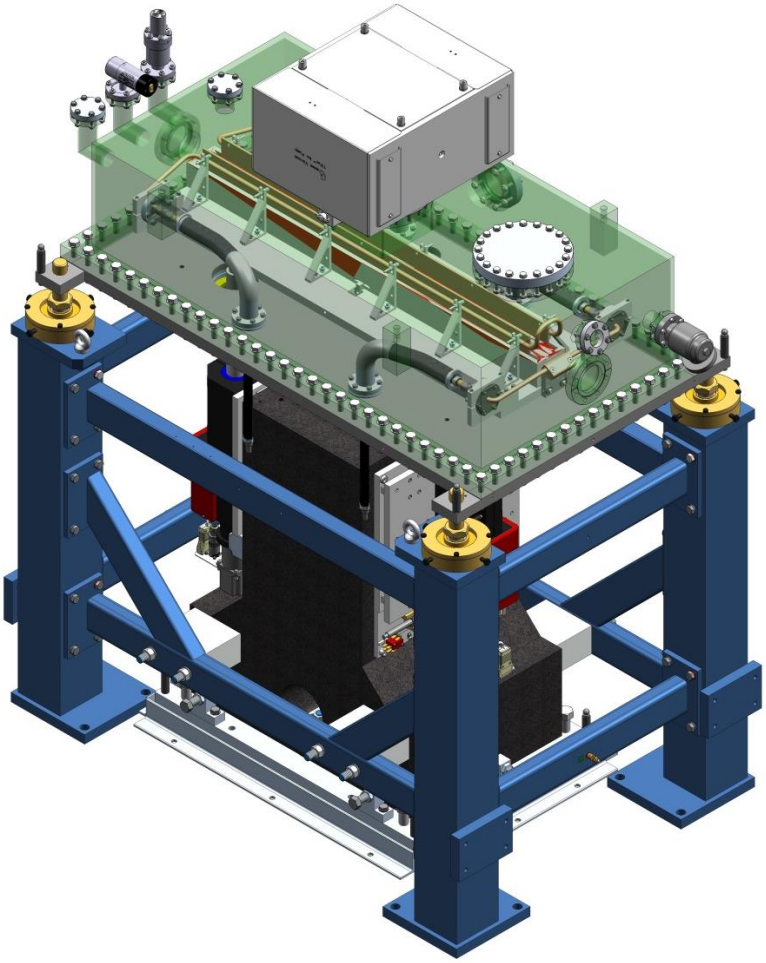

Figure 1. M1 Mirror System

1.1 COORDINATE SYSTEM

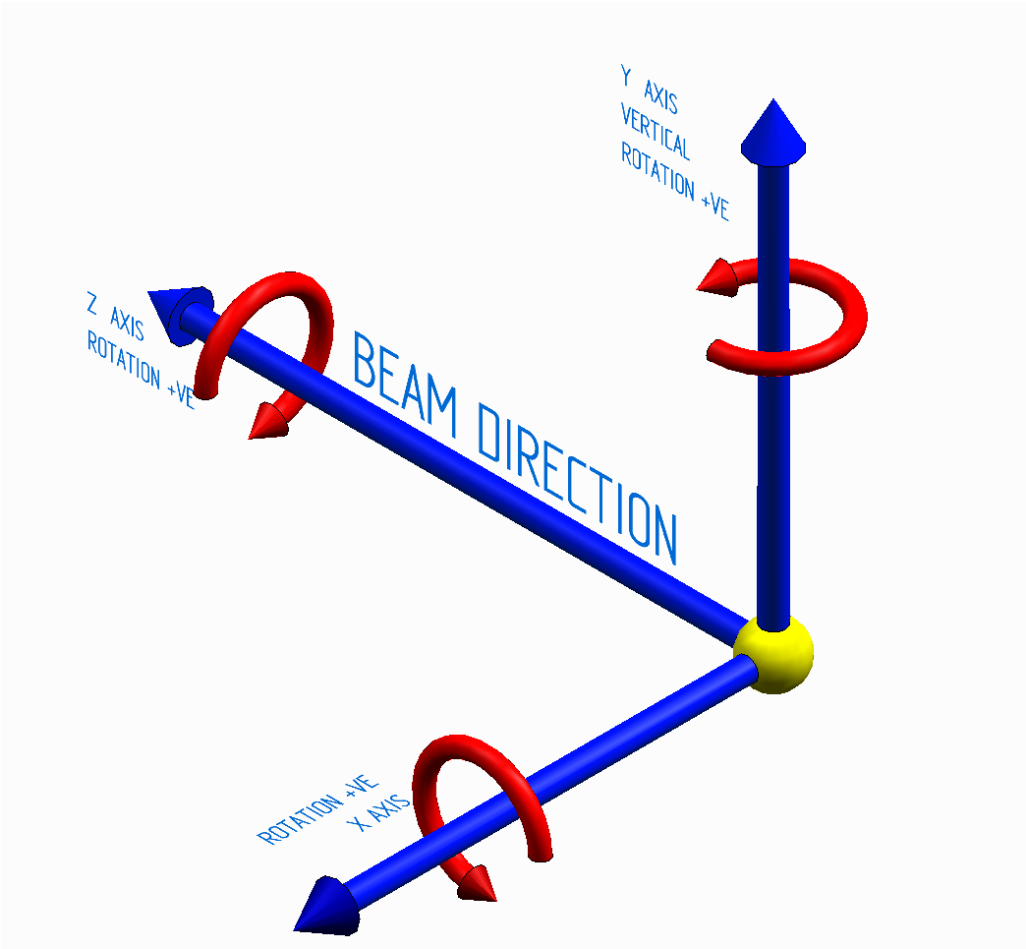

Figure 2. Coordinate System for beamline (and mirror system).

The coordinate system employed complies with NSLS-II document:

Beamline Coordinate System Standards LT-C-XFD-STD-BL-COORD-001.

At the source height (1200mm above the accelerator tunnel floor), y=0. The source is at the origin. The mirror 1 optic is located at 13000 mm from the source.

2. SPECIFICATIONS

2.1 MIRROR SYSTEM

Incoming Beam Height	1200 mm above accelerator tunnel floor, 1400 mm above the experimental hall floor
Optic centre	13 m from source
Operating Position	Vertically deflecting upwards, vertically and horizontally collimating.
Overall dimensions	890 (max) W, 862 W with adjustment screws temporarily removed if required x 1310 L x 1663 H
Manual Adjustments	± 15 mm in y prior to grouting floor plate. Granite base z, x and Ry (yaw) can then be adjusted from grouted-in floor plate.

2.1.1 M1 Mirror Optic

Substrate material	Single crystal silicon
Substrate dimensions	1000 mm L x 80 mm W x 60 mm D
Active Area (centred on substrate to within ± 0.5mm)	900 mm x 30 mm
Grazing incidence angle, P, Q	3.5 mrad (0.2°), 13m, ∞
Substrate Shape	Paraboloid
Tangential slope error	< 2.5 µrad RMS over active length in frequency range L^{-1} to 1 mm^{-1}
Sagittal slope error	<25 µrad RMS over active length on prepared substrate in frequency range W^{-1} to 1 mm^{-1}
Coating	Rh 50 Å ± 10% thick on Pt 300 Å. No binder layers permitted.
Surface Roughness	<0.3 nm RMS in frequency range 0.005 to 1 μm^{-1}. No points over 0.8 nm permitted.
Surface Quality (Scratch/dig)	10-5 to MIL-0-13830A over 99% of surface.
Cooling	Slot Cooled

2.2 M1 MIRROR MASK

A cooled mask is fitted to the front of the M1 to protect the optic from incident beam. A k-type thermocouple is fitted to the mask to monitor the heatload.

Material	Copper
Dimensions	Inclined to incoming beam with a 30 degree incidence angle. Beam divergence = 2 mrad (H) x 0.3 mrad (V) @ ~ 13m = a beam size of ~26 H x 3.9 V with 319W max absorbed used for FEA

Figure 3. Mask assembly

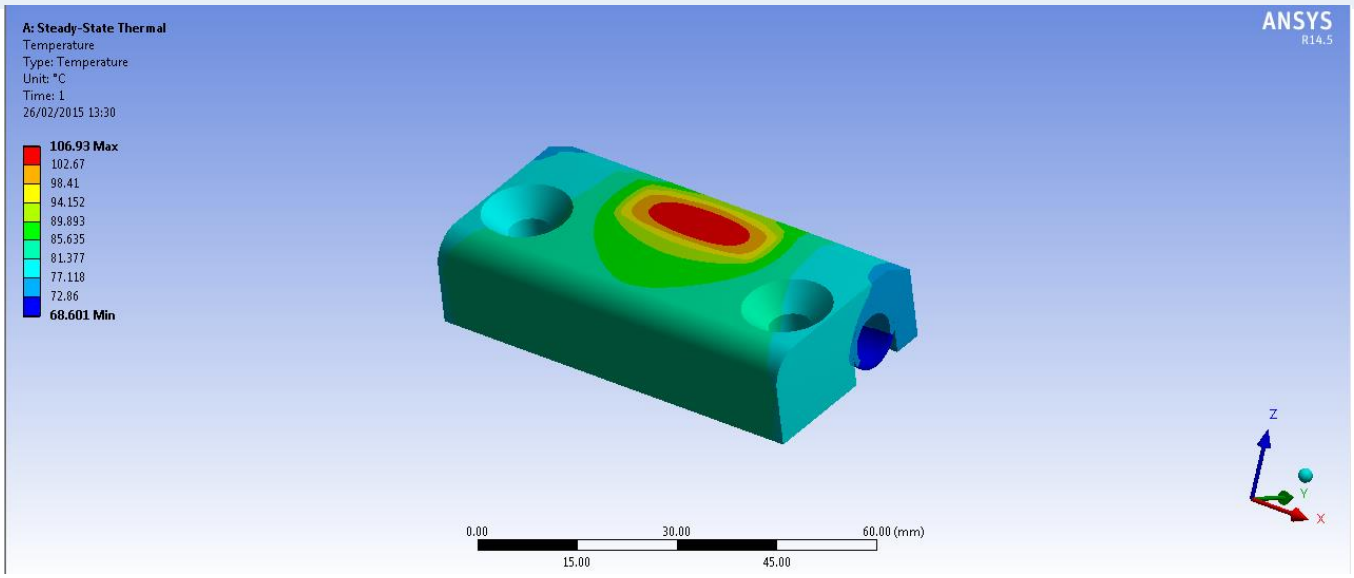

Figure 4. Mask FEA showing max temperature

2.3 MIRROR COOLING

Water is fed to the cooling circuit from outside the vacuum vessel by air guarded hoses that are connected to Copper cooling blades. The mirror cooling blades sit in an indium-galium mix located in recesses in the optic.

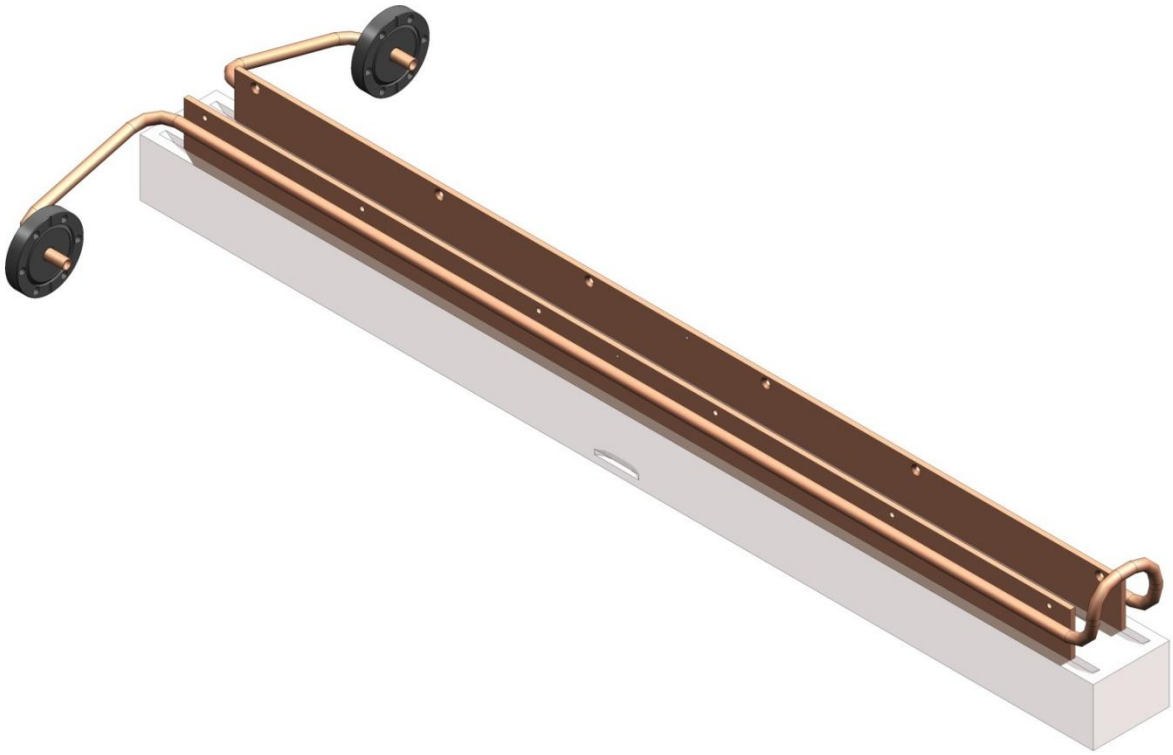

Figure 5. Cooling blades inserted into eutectic baths in Optic

2.4 MIRROR COOLING LINES

Water is fed to each cooling circuit from outside the vacuum vessel by air guarded hoses. There are no water to vacuum joints.

Figure 6. Air guarded hose assembly

2.5 MANUAL MOTIONS

The mirror mechanism is mounted on a large plinth, moulded from synthetic granite which can be adjusted into final position using the grouted in floor plate which will require pre-aligning.

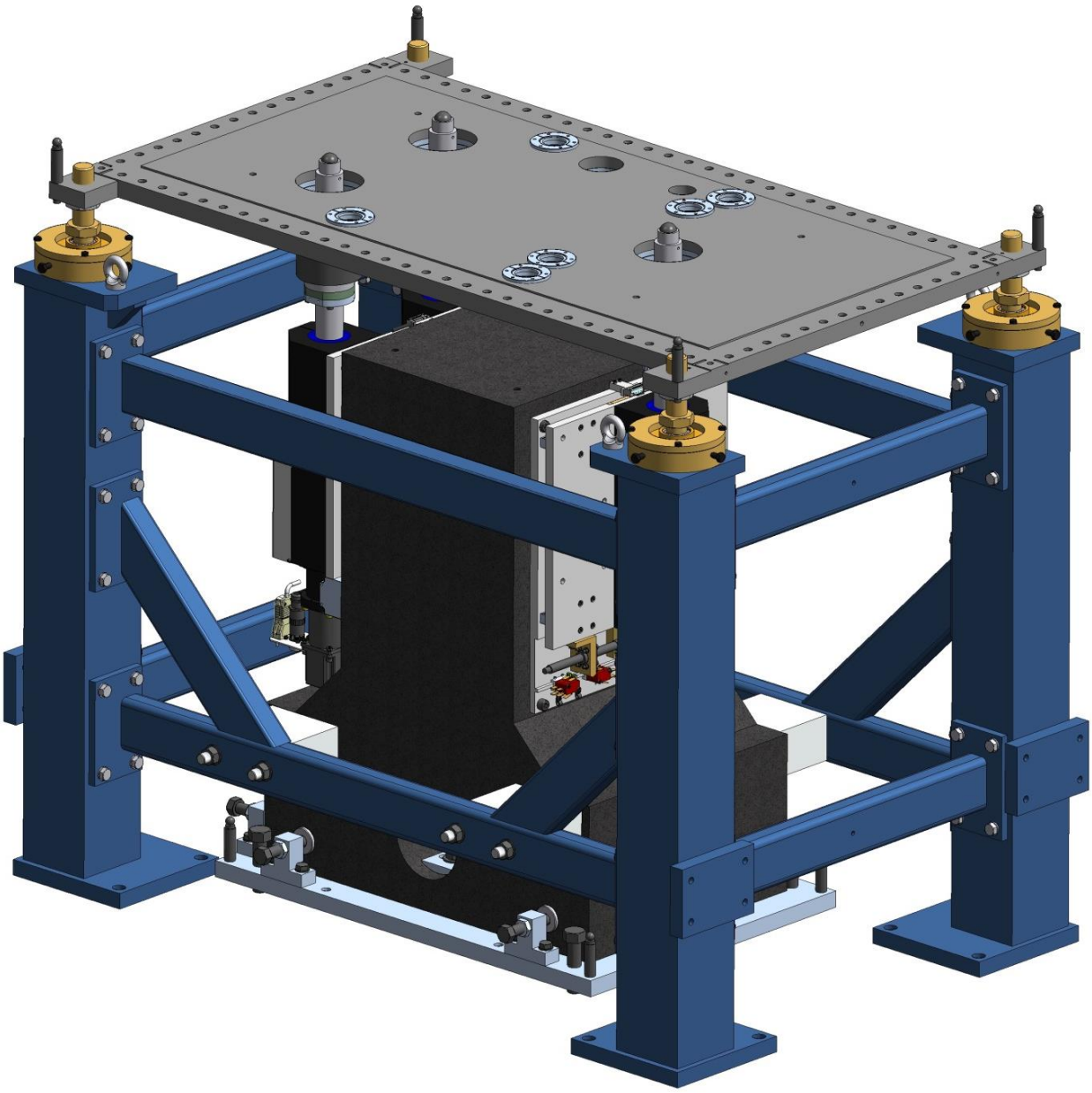

Figure 7. Base assembly with manual adjusters

2.6 MOTORISED MOTIONS

Ty Vertical Translation	Movement taken into vacuum via a post fitted with an edge-welded bellows. There is no solid connection between the mechanism and the vacuum vessel.	
	Drive	3 Vertical jacks. 0.1µm Encoder
	Range	±10 mm
	Resolution	<90 µm
	Repeatability	<2 µm
	Encoder	Renishaw Tonic-10 mm Pb shielded
Tx Lateral Translation	The lateral translation is made by moving the 2 in air translation stages together.	
	Drive	Lateral slides. 0.1µm Encoder
	Range	±10 mm
	Resolution	<70 µm
	Repeatability	≤2 µm
	Encoder	Renishaw Tonic-10 mm Pb shielded
Rx Adjustment (Pitch)	Movement made by moving the 2 jacks on one end of the mirror support in opposition with the single jack located at the other end.	
	Drive	3 Vertical jacks. 0.1µm Encoder
	Range	±1° (± 10 mm vertically @ 556 crs)
	Resolution	≤35 µrad
	Repeatability	≤2 µrad
	Encoder	Renishaw Tonic
Rz Adjustment (Roll)	Made by moving the inboard jack of one end of the mirror support in opposition with the outboard jacks on the same end of the mirror support. The single jack on the other end of the mirror support is not used for this motion.	
	Drive	2 Vertical jacks. 0.1µm Encoder
	Range	±2.4° (± 10 mm vertically @ 240 crs). However, restricted to ±1° by roll limit switches
	Resolution	< 1 mrad
	Repeatability	≤5 µrad
	Encoder	Renishaw Tonic

Ry Adjustment (Yaw)	Made by moving the upstream translation stage on one end of the mirror support in opposition with the stage located at the other end.	
	Drive	Lateral slides. 0.1µm Encoder
	Range	±1° (± 10 mm laterally @ 556 crs)
	Resolution	≤5 µrad
	Repeatability	≤2 µrad
	Encoder	Renishaw Tonic

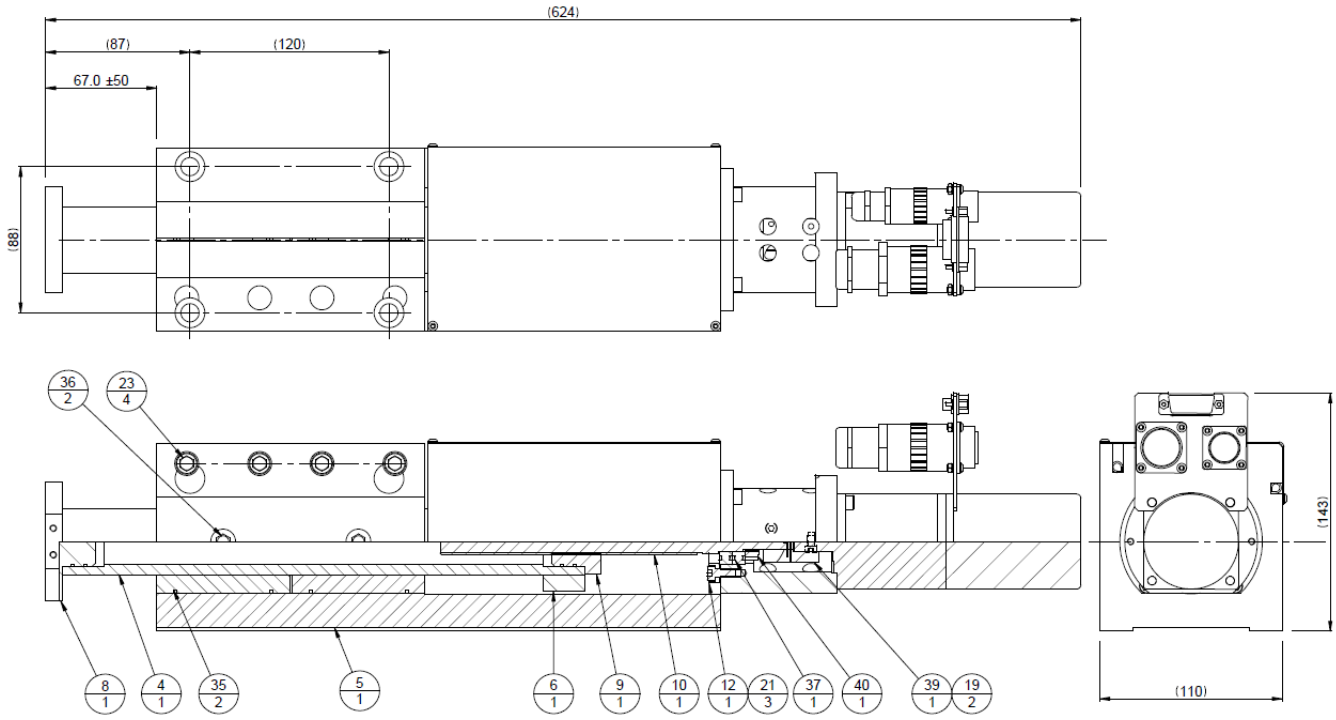

Figure 8. Mirror Vertical Jack

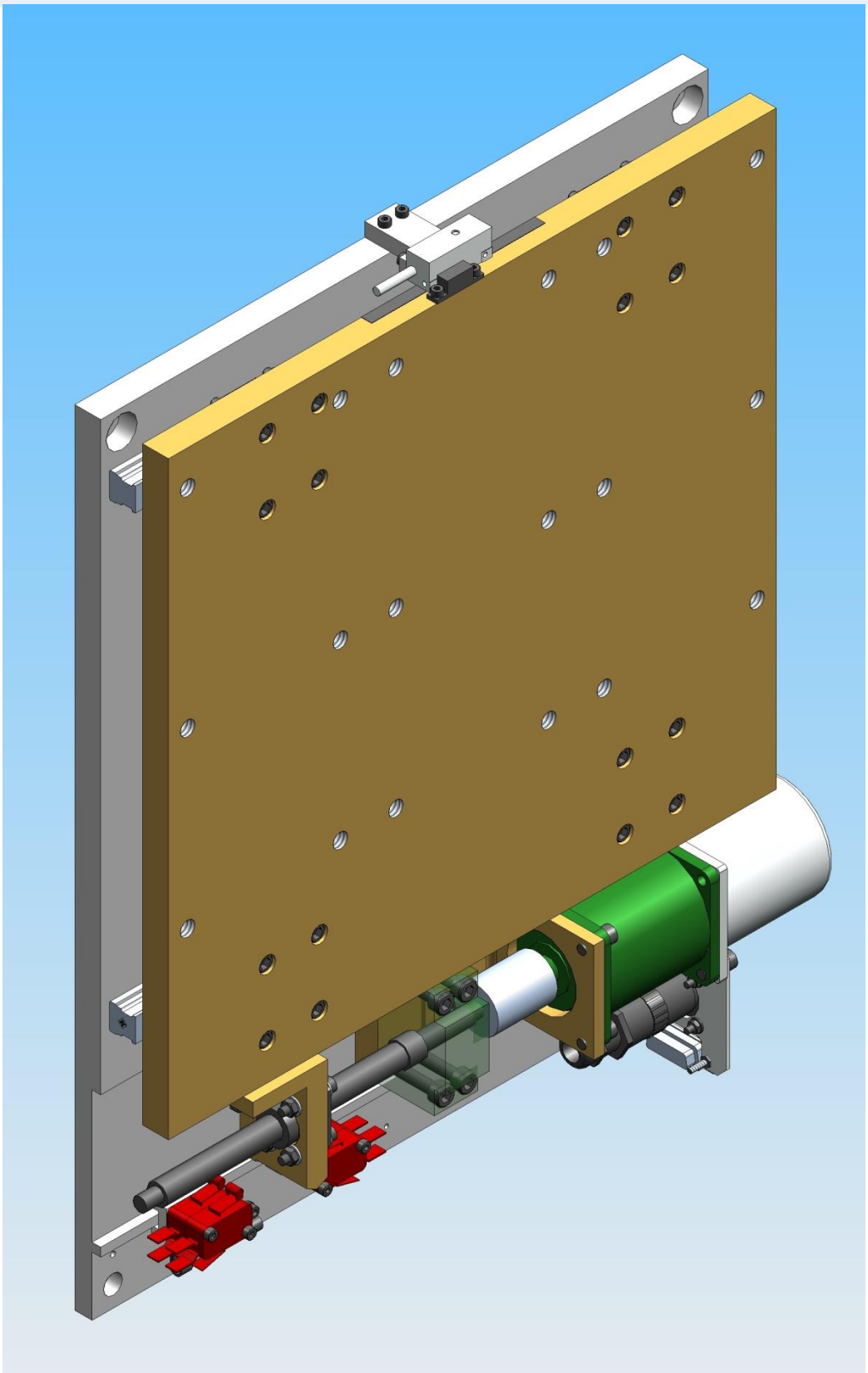

Figure 9. In air lateral translation

2.7 VACUUM SYSTEM

Maximum bakeout temperature – vessel and internal components	150 °C
Vacuum	UHV compatible < 1 x10^{-9} mbar
Helium leak rate	< 1 x 10 $^{-10}$ mbar l/sec
Vacuum pump	Gamma vacuum 300L ion pump located on top of the vessel.
Outgassing spec-optic not fitted	Masses in the range 38-80 amu shall total < 1.34 x10^{-11} mbar.
Vacuum gauges	One pirani gauge (MKS type 317)and one cold cathode gauge(MKS type 422) located on the mirror vessel
Right Angle Valve	VAT Valve type 54, DN40/CF70.
Burst disc	MDC Pt No 420033-BDA-275-ASME http://www.mdcvacuum.com/DisplayPart.aspx?d=MDC&p=420033

2.8 VACUUM VESSEL

The vessel shall comprise a stainless steel baseplate onto which is bolted the vessel lid. Access to the mirror is obtained by removing the lid. The vessel shall be rectangular and fabricated from dull polished 304 grade stainless steel plates with full penetration welds and cleaned and prepared in accordance with standard UHV requirements. All flanges shall be Conflats, manufactured from 304 stainless steel and sealed with copper gaskets, with the exception of the large rectangular vessel baseplate. The vessel is protected from overpressure using a burst disc mounted on the underside of the vessel pointing down. No ports are fitted to the outboard side of the vessel due to its close proximity to a w all.

Purpose	Location	Size	Qty
Beam In	Beam inlet port at end 1	DN63/CF114	1
Beam Out	Beam outlet port at end 2	DN63/CF114 ROT	1
Ion Pump	Vessel lid	DN150/CF200	1
Roughing Port for RA valve	End of vessel	DN40/CF70	1
Viewport-Lead Glass	Inboard side of vessel	DN63/CF114	1
Viewport-Lead Glass	Incoming wall of vessel angled to look at substrate surface	DN35/CF70	1
Vacuum Gauges	End of vessel	DN35/CF70	3

Spare	Top of vessel	DN150/CF200	1
Spare	Top of vessel	DN35/CF70	1
Mirror Loading	Baseplate	Aluminium wire seal	1
Electrical Feedthrough-1 x 15W D type flange	Vessel base	DN40/CF070	1
Burst disc	Vessel base	DN40/CF070	1
Water cooling	Vessel base	DN40/CF070	4
Spare	Vessel base	DN63/CF114	1

2.9 ELECTRICAL DATA

2.9.1 Vertical (in air) Actuators

Motor Type Holding torque Step angle (full step drive) Driving current No. of ½ steps/revolution	McLennan stepper motor, 23HSX206+IP57-M2-25 80 Ncm 1.8°/200 steps/rev 2 A 400
Maximum velocity	1800 steps/sec
Drive type	Direct
Gear box ratio	25:1
Resolution per full step	0.4 µm
Maximum movement per actuator	100 mm
Readhead type	MQPO0119-(Renishaw T1001-05A)
Readhead resolution	0.1 µm
Scale type Precision reference type	MQPO0111-20 µm (Renishaw RGSZ20) MQPO0098-(Renishaw A-9653-0143)
Interpolator	MQPO0109 (Renishaw Ti0200E04A)
Connector	15-Way sub D

2.9.2 Lateral (in air) Translation

Motor Type Holding torque Step angle (full step drive) Driving current No. of ½ steps/revolution	McLennan stepper motor, 23HSX206+IP57-M2-50 80 Ncm 1.8°/200 steps/rev 2 A 400
Maximum velocity	1800 steps/sec
Drive type	Direct
Gear box ratio	50:1
Resolution per full step	0.2 µm
Maximum movement per actuator	70 mm
Readhead type	MQPO0119-(Renishaw T1001-05A)
Readhead resolution	0.1 µm
Scale type Precision reference type	MQPO0111-20 µm (Renishaw RGSZ20) MQPO0098-(Renishaw A-9653-0143)
Interpolator	MQPO0109 (Renishaw Ti0200E04A)
Connector	15-Way sub D

2.9.3 Thermocouples

Mask	K-type
Mirror cooling inboard cooling blade	K-type
Mirror cooling outboard cooling blade	K-type

2.9.4 Electrical Interfacing

All in air motors, limits, encoders are connected at the relevant drive. In vacuum thermocouples are connected to a local 15-Way sub D.

2.10 UTILITIES

Cooling circuits:

- 1 grazing incidence water cooled mask
- 1 internal water cooling circuits for the mirror

Water will be fed to each cooling circuit from outside the vacuum vessel by "air-guarded" hoses. Each hose will comprise a set of stainless steel bellows designed to articulate with the movement of the mirror. The bellows will seal to a Conflat at the vessel and to an internal Conflat bulkhead adjacent to the mirror and will contain normal atmospheric pressure. The bulkhead Conflat will include a vacuum brazed water feed-through to ensure that there is no direct water-to-vacuum joint. Each bellows will carry an elastomeric (EPDM) flexible hose with Swagelok™ terminations to connect with the external water supply.

Maximum pressure	7 bar gauge
Minimum pressure	3 bar gauge
Maximum pressure drop-Mask	< 1 bar (at 2 litres/min flow rate)
Flow rate-Mask Maximum pressure drop-Optic Flow rate-Optic	2 litres/min to cover ~319 W absorbed < 2 bar (at 2 litres/min flow rate) 2 litres/min to cover ~30 W absorbed
Connections	12 mm Swagelok™
Coolant type	Non-aggressive de-ionised water
Coolant temperature	20-25 °C (±1°C stability)

2.11 LIFTING POINTS

M1 mirror system weight: 1250 kg approximately.

A lifting diagram for the system will be provided.

Lifting points	System	Lift by M16 holes in the frame
	Vessel lid	Four M16 holes provided on the vessel for lifting eyes.

2.12 ALIGNMENT FEATURES

Fiducial mounts will be provided on the floorplate, vessel base and on the dummy optic. These will take the form of 0.25” reamed (H7) holes, suitable for 0.5” or 1.5” spheres.

3. FACTORY TESTING

Testing at FMB Oxford consists of Motion Testing, Vacuum Testing and Fiducialisation.

Full specifications and procedures covering all factory testing will be prepared in advance and these will be submitted to the customer prior to final design approval. Representatives from the customer are invited to witness these tests at FMB Oxford's works.

4. INSTALLATION AND UNIT ACCEPTANCE

The site acceptance testing, included in the installation option, will ensure that all components are carefully surveyed into position, all motors, actuators and sensors are functioning properly and the vacuum specifications are met. All motions will be tested and the correct functioning of all limit and datum switches checked. The complete set of detailed factory tests are not repeated on site.

There will be a full leak check of the installed vacuum sections. We expect that a turbo pump station, RGA rig, and He leak checker to be provided by the customer for our use while at the customer's site.

Final site acceptance will include:

- All factory test data, documentation and manuals
- Correct operation of all motions, limits and datum switches using FMB-O controls and cabling.
- Leak testing at the best achievable sensitivity after 24 hrs of pumping and prior to on site customer bakeout

5. DESIGN STANDARDS AND MANUFACTURING PROCEDURES

The system shall be designed, manufactured and tested to the agreed specification and drawings. All FMB Oxford documentation shall be written in English.

A full manual covering the system shall be written and supplied to the customer. Top level assembly drawings of the systems shall also be provided.

Testing procedures and results will be included in the manual.

6. SCOPE OF SUPPLY

Design, manufacture, supply and installation of a High Stability Mirror System. Including:-

- Mirror manipulation system
- Vacuum vessel and support frame
- Dummy optic
- Optic including cooling with K type thermocouples x 2
- Mis-steer protection mask and cooling with K type thermocouple
- Gamma Ion Pump
- Burst disc
- One Pirani and one MKS ion vacuum gauge head and associated 20m cables. The controller will be mounted in one of the 2 racks included in the scope of supply.
- Motion (MCS8+) controller and associated 20 m cables-covered by the controls Functional Specification.
- Manual VAT type 54 R/A valve
- A single axis EPICS interface

Excluded from the scope of supply:-

- Water supply connection, conditioning, distribution, monitoring and alarms
- Air connection and supply (if required)
- Floor Drilling
- Equipment Protection System
- Bakeout heaters
- Heater Controllers (for Vacuum Bakeout heaters)
- Ion pump controller and associated 20m cables.

7. APPENDIX

7.1 AXIS NAMING CONVENTION

The figure below shows the naming convention to be used to place the 5 motorised translations.

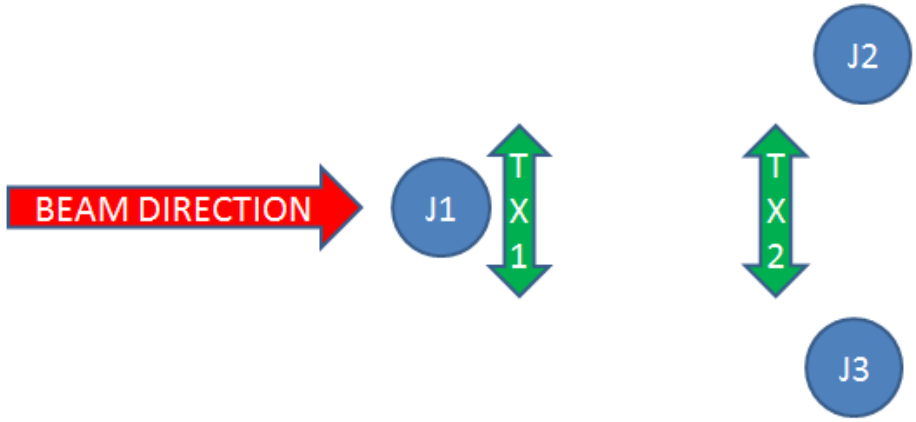

7.2 GLOSSARY

- **Range:** The maximum change of position available to a motion, protected either end by limit switches or non binding end stops.
- **Resolution:** Minimal incremental step size or in the case of an encoder the minimum resolvable distance moved.
- **Repeatability:** The range of deviations in output positions that occurs for the same error free input command. The repeatability is a statistical function measured within two standard deviations of all measurements taken. Repeatability is always assumed to be a uni-directional measurement in this specification.

Mechanical Drawings

A3 ORIGINAL SIZE DO NOT SCALE

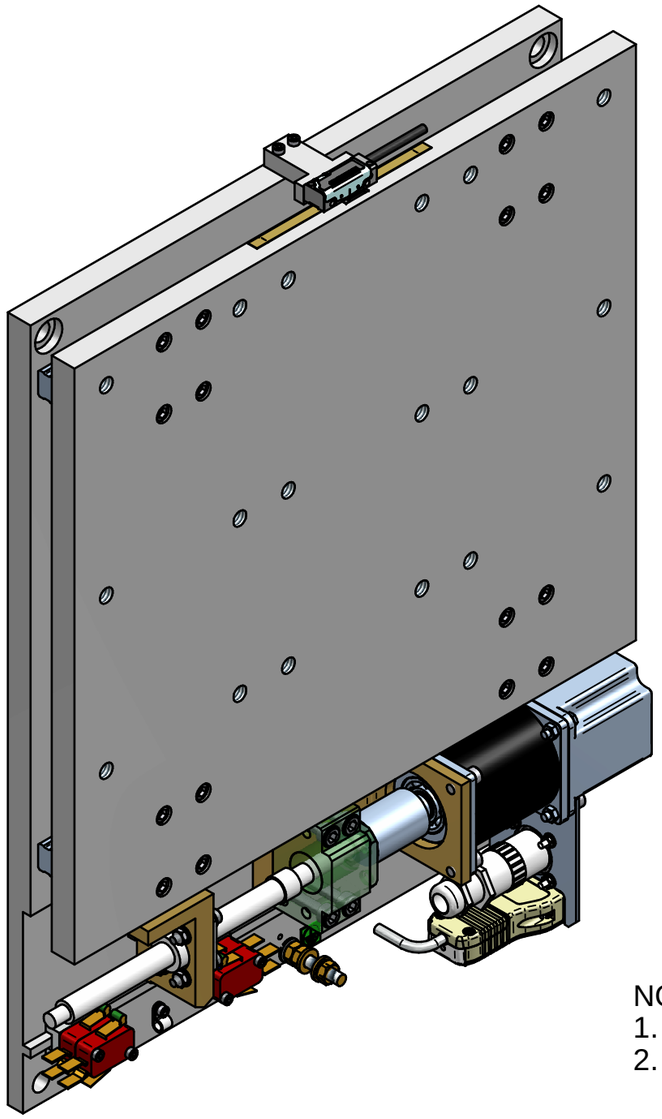

Motion	Range
Translation	±30 mm

NOTES:-
1. ESTIMATED WEIGHT = 18 kg
2. LUBRICATE WITH LM GREASE (NOZG0003)

DOCUMENT NUMBER	ITEM NUMBER	QTY	TITLE	COMMENTS
AAC0368	1	1	TRANSLATION PLATE	
AAC0374	2	1	TRANSLATION BASE PLATE	
AAC0375	3	1	ENCODER MTG - TONIC	
AHM1015	4	1	MOTOR MOUNT-TRANSLATION	
AHM2333	5	1	BEARING SPACER-EXT TRANS	
AHM4152	6	1	LINK ARM-EXT TRANS-DBL SW	
AHM4571	7	2	MICROSWITCH MOUNTING	
AJC0086	8	1	HEX CONN PLT-12WTT 15WD-23HSX MOT	
CJP0084	9*	1	STD MTR(SER) +LIM+OT+TONIC	
FBGZ0005	10	1	STUDDING BR M6.0	CUT TO LENGTH
FBNB0006	11	3	NUT BR M06.0	
FBWB0005	12	2	WASHER BR M06.0	
FSNB0003	13	4	NUT ST M04.0	
FSSB0026	14	2	SCR ST CAP M03.0 X 008 SET	
FSSB0028	15	2	SCR ST CAP M03.0 X 012 SET	
FSSB0031	16	4	SCR ST CAP M03.0 X 025	
FSSB0039	17	4	SCR ST CAP M04.0 X 025 SET	
FSSB0043	18	6	SCR ST CAP M05.0 X 012	
FSSB0044	19	16	SCR ST CAP M05.0 X 016	
FSSB0045	20	12	SCR ST CAP M05.0 X 020 SET	
FSSB0055	21	2	SCR ST CAP M06.0 X 016 SET	
FSSB0061	22	4	SCR ST CAP M06.0 X 050	
FSSB0141	23	2	SCR ST HEX M05.0 X 016	
FSSB0313	24	6	SCR ST GRU M03.0 X 008	
FSSB0970	25	2	SCR ST CAP M02.5 X 010	
FSWB0003	26	8	WASHER ST M04.0	
FSWB0005	27	2	WASHER ST M06.0	
FSWB2002	28	2	WASHER ST LOCK M02.5	
FYSZ0005	29	4	SCR B/Zn PAN M03.0 X 010 POZ	
FZNZ0002	30	4	NUT B/Zn M03.0	
FZWZ0002	31	1	WASHER B/Zn M06.0 STAR	
FZWZ0012	32	4	WASHER B/Zn M03.0	
FZWZ2016	33	1	WASHER MS GALV M06.0 CONTACT	FABORY 37265060001
LAZZ0092	34	2	LIN SL LWET15C2R340T1HS2UK612	
LAZZ0099	35	1	BALLSCREW 12.0 x 2.0 x 100.0	
LAZZ0100	36	1	BALLSCREW SUPPORT BK10	
LDJZ0065	37	1	COUPLING HELICAL 12.7X08.0	
MCMM0054	38	2	FEMALE SCREWLOCK (D-TYPE) 13mm	
MCMT5212	39	1	HOOD 12WAY TRIM TRIO	

DOCUMENT NUMBER	ITEM NUMBER	QTY	TITLE	COMMENTS
MCMT5712	40	1	PLG CHASSIS 12 WAY TRIM TRIO	
MMST2020	41	1	MOTOR+GBOX 23HSX206+IP57-M2-50	
MQPO0098	42	1	TONIC ENCODER REFERENCE MARKER	LA-9653-0143
MQPO0109	43	1	TONIC INTERP LIN 0.1um 4MHz E	Ti0200E04A
MQPO0111	44*	1	TONIC RGSZ20 ENCODER STRIP	CUT TO LENGTH
MQPO0119	45	1	LIN ENC TONIC T1000 R/HEAD 0.5	T1000-05A
MSMI0049	46	4	MICROSWITCH V3 SHORT ROLLER	
MWCG0001	47	2	P CLIP 5.0 POLYAMIDE 6.6	
MZLA0003	48	1	EARTH WARNING LABEL 12.5x12.5	SELF ADHESIVE

REV	DATE	DMR	DESCRIPTION
02	28/04/15	-	FDR ISSUE

THIS DRAWING BELONGS TO FMB OXFORD. THIS DRAWING HAS BEEN ISSUED ON CONDITION THAT IT IS NOT COPIED,REPRINTED OR DISCLOSED EITHER WHOLLY OR IN PART DETAIL TO A THIRD PARTY WITHOUT PRIOR CONSENT IN WRITING FROM FMB OXFORD,OSNEY MEAD, OXFORD, ENGLAND ©2015

TOLERANCES UNLESS STATED
X ± 0.5mm
X.X ± 0.3mm
X.XX ± 0.1mm
ANGLE ± 0°15'

MATERIAL:

SURFACE FINISH 1.6µm UNLESS STATED

FINISH: CLEAN

SHEET 1 OF 2

mm UNLESS STATED

DATE 28/04/15

DESCRIPTION
DRIVE-EXT TRANS 12W TT+ENC-50:1

DRAWN julian.wiatrzyk

STATUS

FMB Oxford

DRAWING NUMBER AAM0044

REV 02

A3 ORIGINAL SIZE DO NOT SCALE

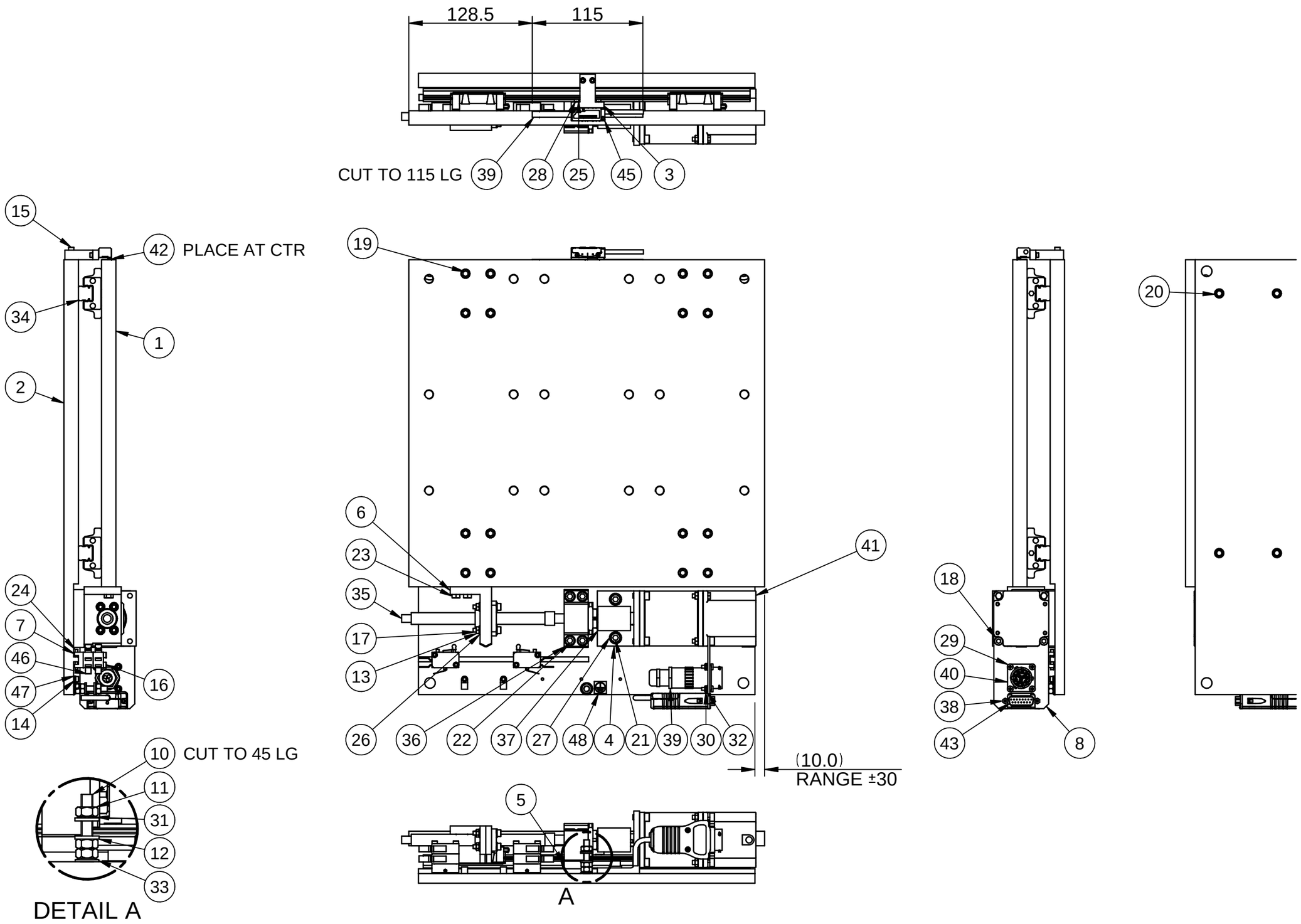

REV	DATE	DMR	DESCRIPTION
02	28/04/15	-	FDR ISSUE

THIS DRAWING BELONGS TO FMB OXFORD. THIS DRAWING HAS BEEN ISSUED ON CONDITION THAT IT IS NOT COPIED,REPRINTED OR DISCLOSED EITHER WHOLLY OR IN PART DETAIL TO A THIRD PARTY WITHOUT PRIOR CONSENT IN WRITING FROM FMB OXFORD,OSNEY MEAD, OXFORD, ENGLAND ©2015

TOLERANCES UNLESS STATED
X ± 0.5mm
X.X ± 0.3mm
X.XX ± 0.1mm
ANGLE ± 0°15'

MATERIAL:

SURFACE FINISH 1.6µm UNLESS STATED

FINISH: CLEAN

SHEET 2 OF 2

mm UNLESS STATED

DATE 28/04/15

DESCRIPTION
DRIVE-EXT TRANS 12W TT+ENC-50:1

DRAWN julian.wiatrzyk

STATUS

FMB Oxford

DRAWING NUMBER AAM0044

REV 02

A3 ORIGINAL SIZE DO NOT SCALE

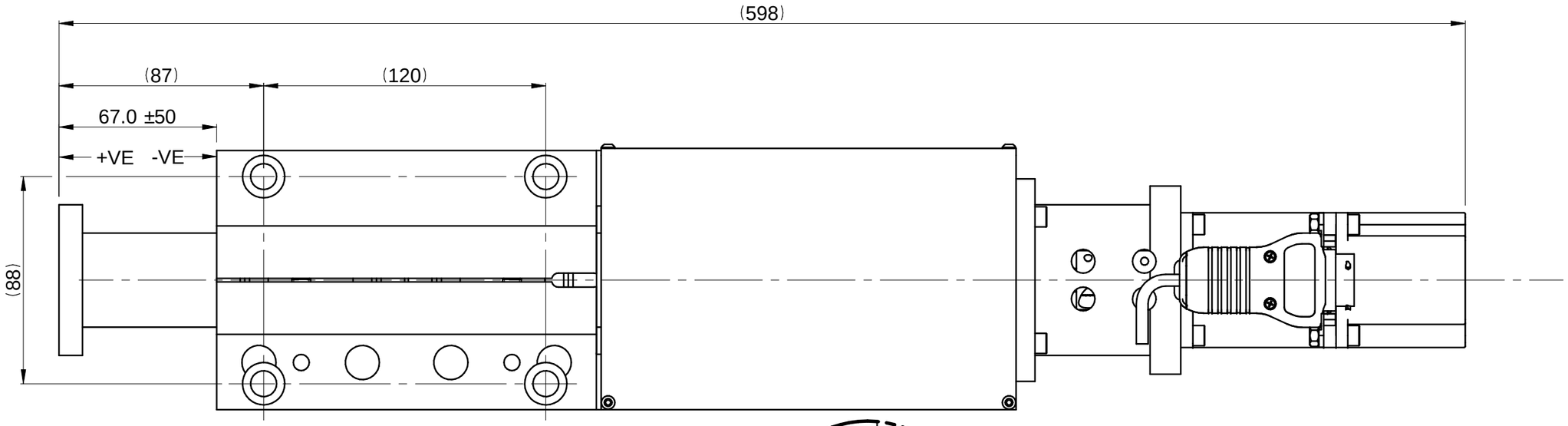

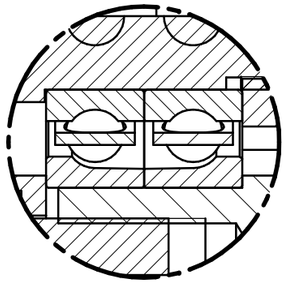

DETAIL A
NOTE ORIENTATION OF BEARINGS

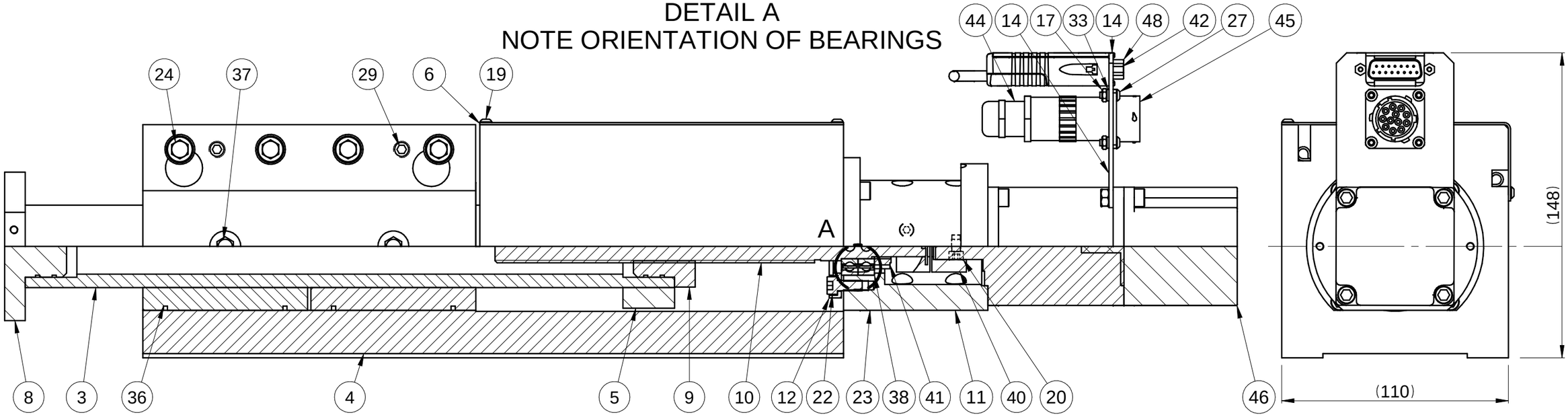

REV	DATE	DMR	DESCRIPTION
05	30/06/15	0106594	AHJ0183: INTRODUCE 2 x M8 GRUB SCREWS
04	03/10/14	0106233	WIRING DIAGRAM NOW CJP0084
03	28/07/14	0106005	MCMM0053 REPLACED WITH MCMM0054

THIS DRAWING BELONGS TO FMB OXFORD. THIS DRAWING HAS BEEN ISSUED ON CONDITION THAT IT IS NOT COPIED,REPRINTED OR DISCLOSED EITHER WHOLLY OR IN PART DETAIL TO A THIRD PARTY WITHOUT PRIOR CONSENT IN WRITING FROM FMB OXFORD,OSNEY MEAD, OXFORD, ENGLAND

TOLERANCES UNLESS STATED
X ± 0.5mm
X.X ± 0.3mm
X.XX ± 0.1mm
ANGLE ± 0°15'

MATERIAL:

SURFACE FINISH 1.6µm UNLESS STATED

FINISH :CLEAN

SHEET 1 OF 4

mm UNLESS STATED

DATE 30/06/15

DESCRIPTION
JACK ±50-12W-TONIC-25:1

DRAWN julian.wiatrzyk

STATUS RELEASED

FMB Oxford

DRAWING NUMBER AJM0012

REV 05

A3 ORIGINAL SIZE DO NOT SCALE

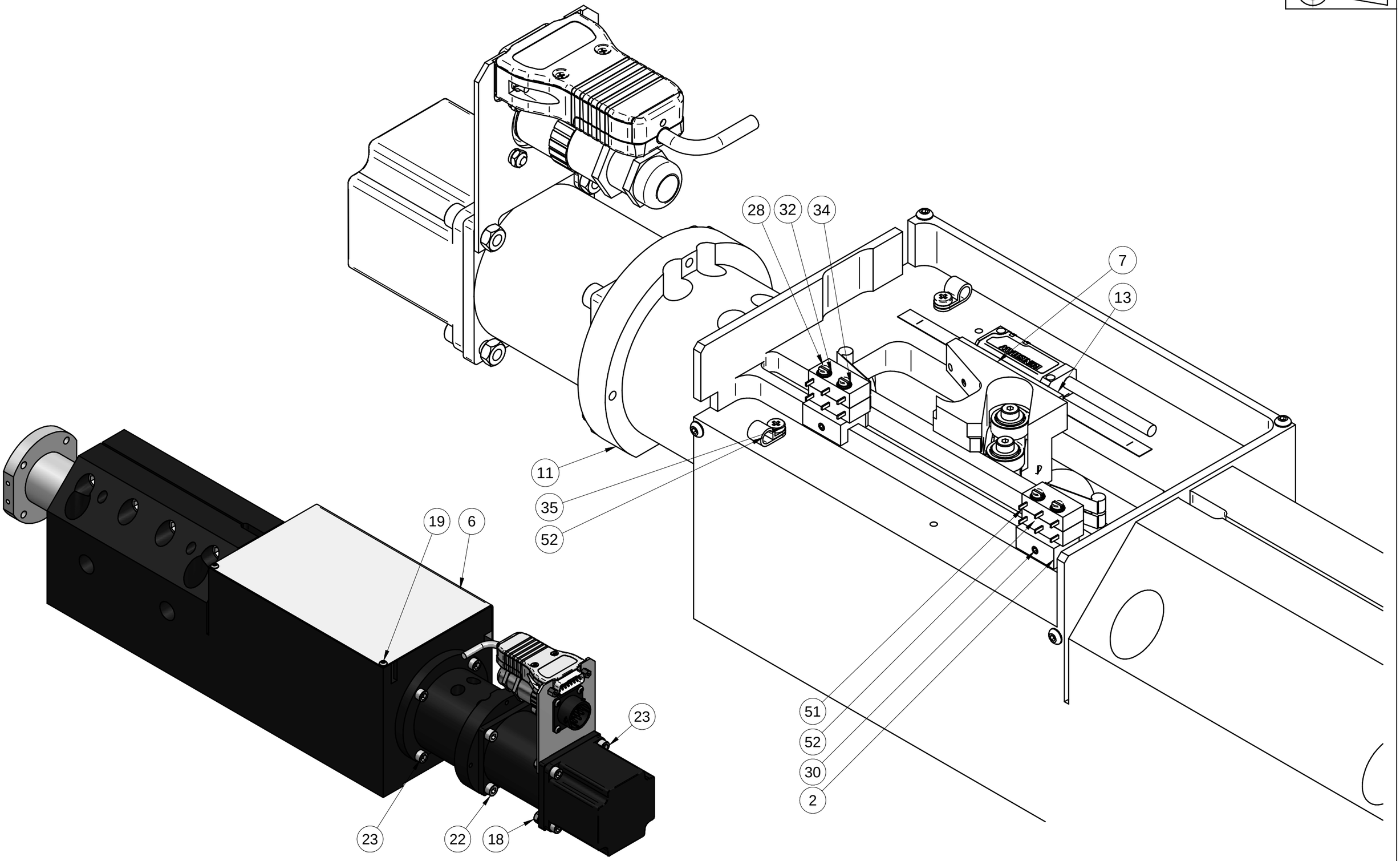

REV	DATE	DMR	DESCRIPTION
05	30/06/15	0106594	AHJ0183: INTRODUCE 2 x M8 GRUB SCREWS
04	03/10/14	0106233	WIRING DIAGRAM NOW CJP0084
03	28/07/14	0106005	MCMM0053 REPLACED WITH MCMM0054

THIS DRAWING BELONGS TO FMB OXFORD. THIS DRAWING HAS BEEN ISSUED ON CONDITION THAT IT IS NOT COPIED,REPRINTED OR DISCLOSED EITHER WHOLLY OR IN PART DETAIL TO A THIRD PARTY WITHOUT PRIOR CONSENT IN WRITING FROM FMB OXFORD,OSNEY MEAD, OXFORD, ENGLAND

TOLERANCES UNLESS STATED
X ± 0.5mm
X.X ± 0.3mm
X.XX ± 0.1mm
ANGLE ± 0°15'

MATERIAL:

SURFACE FINISH 1.6µm UNLESS STATED

FINISH :CLEAN

SHEET 2 OF 4

mm UNLESS STATED

DATE 30/06/15

DESCRIPTION
JACK ±50-12W-TONIC-25:1

DRAWN julian.wiatrzyk

STATUS RELEASED

FMB Oxford

DRAWING NUMBER AJM0012

REV 05

A3 ORIGINAL SIZE DO NOT SCALE

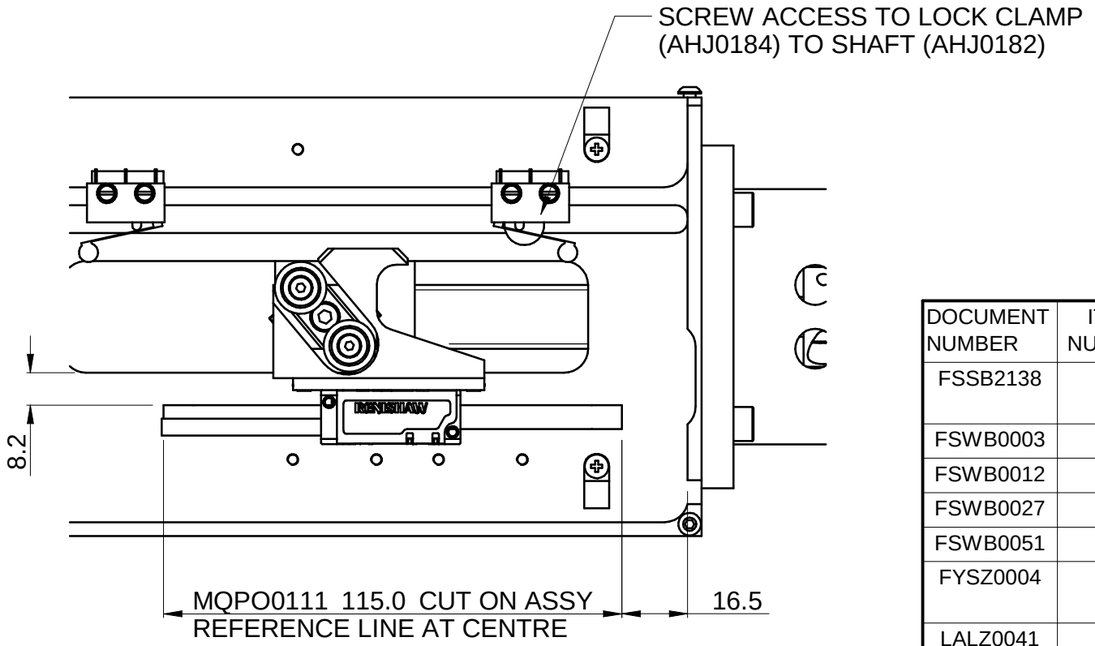

1. CLEAN AND DEGREASE THE SHAFT HEAD, SHAFT & BUSH. BOND ITEMS USING SCOTCH-WELD 1838 B/A EPOXY ADHESIVE. CURING OF THE ADHESIVE SHOULD BE MADE WITH THE SHAFT VERTICAL. THE CURE MAY BE MADE AT ROOM TEMPERATURE BUT A FASTER AND STRONGER BOND WILL BE OBTAINED AT 60 –80 °C.
2. FIT THE LINEAR BEARINGS IN THE JACK BODY ENSURING THAT THE GREASE NIPPLES CORRECTLY SEAT IN THE BEARINGS AND THE JACK BODY.
3. LIBERALLY GREASE THE LINEAR BEARINGS WITH SHELL ALVANIA EP (LF) 2 OR EQUIVALENT AND INSERT THE BONDED SHAFT ASSEMBLY IN THE BEARINGS. FIT THE CLAMP SCREW TO THE ANTI-ROTATION COLLAR. PUSH THE COLLAR ON THE SHAFT AND FIT THE SWITCH TRIGGER, AND BEARINGS ETC., TO THE COLLAR AS SHOWN ON SHT 4.
4. ROTATE THE SHAFT SO THAT THE FLATS ON THE HEAD ARE AT RIGHT ANGLES TO THE REAR FACE OF THE BODY (± 0.25 DEG). FIT AHJ0184-ANTI ROT CLAMP FLISH WITH END OF SHAFT. TIGHTEN THE CLAMP SCREW ON THE CLAMP.
5. TIGHTEN THE FIRST LINEAR BEARING CLAMP SCREWS TO ENSURE THAT THERE IS NO RADIAL FREE PLAY OF THE SHAFT OVER THE WHOLE RANGE OF TRAVEL WHILE MINIMISING THE BEARING FRICTION. REPEAT FOR THE SECOND BEARING.
6. FIT THE DUPLEX ANGULAR CONTACT BEARINGS ON THE JACK SCREW. APPLY LOCTITE TO THE LOCK NUT AND CLAMP THE TWO BEARINGS ON THE SHAFT. INSERT THE JACK SCREW INTO THE DRIVE MOUNT AND FIT THE BEARING RETAINING PLATE. FIT THE HELICAL COUPLING TO THE JACK SCREW.
7. APPLY GREASE TO THE JACK SCREW AND THE SHAFT BUSH AND SCREW THE JACK SCREW INTO THE BUSH AS FAR AS POSSIBLE WITH THE DRIVE MOUNT IN CONTACT WITH THE JACK BODY. FIT JACK BODY. TURN THE JACK SCREW AND CHECK THAT THERE IS FREE MOVEMENT THROUGHOUT THE FULL RANGE OF TRAVEL. (IT SHOULD BE POSSIBLE TO REMOVE ANY TIGHT SPOTS BY LOOSENING AND RE-TIGHTENING THE DRIVE MOUNT ATTACHMENT SCREWS.)
8. FIT THE SWITCH MOUNT COMPONENTS, THE MICRO-SWITCHES AND THE ENCODER. ADJUST THE POSITIONS OF THE SWITCHES TO ENABLE THE REQUIRED TRAVEL.
9. FIT THE MOTOR AND GEARBOX TO THE DRIVE MOUNT AND CLAMP THE HELICAL COUPLING TO THE OUTPUT SHAFT OF THE GEARBOX.
10. FIT THE CONNECTORS TO THE MOUNTING PLATE AND FIT THE MOUNTING PLATE ON THE DRIVE MOUNT.
11. REFER TO CJP0084 FOR WIRING DETAILS.

DOCUMENT NUMBER	ITEM NUMBER	QTY	TITLE	COMMENTS
FSSB2138	30	2	SCR ST GRU M03.0 X 004 SKT-DP	
FSWB0003	31	4	WASHER ST M04.0	
FSWB0012	32	4	WASHER ST M02.0	
FSWB0027	33	4	WASHER ST LOCK M03.0	
FSWB0051	34	4	WASHER ST LOCK M02.0	
FYSZ0004	35	2	SCR B/Zn PAN M03.0 X 006 POZ	
LALZ0041	36	2	LINEAR BEARING SKF LBCR 40 2LS	
LALZ0042	37	2	GREASE NIPPLE-LINEAR BEARING SKF	
LARB0055	38	1	BRG ANG CONT .12X28X8-DUPLEX	
LAZZ0091	39	2	BEARING 4x13x5 624	
LDJZ0067	40	1	COUPLING HELICAL 12.7 X 10.0	
LTNZ0009	41	1	LOCK NUT M12 X 1.0	
MCMM0054	42	2	FEMALE SCREWLOCK (D-TYPE) 13mm	
MCMT2320	43*	16	CONTACT PIN CRIMP QM 3PT 20-22	
MCMT5212	44	1	HOOD 12WAY TRIM TRIO	
MCMT5712	45	1	PLG CHASSIS 12 WAY TRIM TRIO	
MMST0139	46	1	MOTOR+GBOX 25:1 23HSX-206	
MQPO0098	47	1	TONIC ENCODER REFERENCE MARKER	LA-9653-0143
MQPO0109	48	1	TONIC INTERP LIN 0.1um 4MHz E	Ti0200E04A
MQPO0111	49*	1	TONIC RGSZ20 ENCODER STRIP	CUT TO LENGTH
MQPO0119	50	1	LIN ENC TONIC T1000 R/HEAD 0.5	T1000-05A
MSMI0011	51	4	MICRO-SWITCH TYPE V4 ROLLER	
MWCG0001	52	2	P CLIP 5.0 POLYAMIDE 6.6	

DOCUMENT NUMBER	ITEM NUMBER	QTY	TITLE	COMMENTS
AHJ0024	1	1	ROTATING BEARING CLAMP	
AHJ0034	2	2	LIMIT SWITCH MOUNT	
AHJ0182	3	1	SHAFT-100 STROKE JACK LJT40	
AHJ0183	4	1	MIRROR JACK BODY-100 STROKE	
AHJ0184	5	1	ANTI ROT CLAMP JACK	
AHJ0185	6	1	JACK COVER	
AHJ0186	7	1	BEARING CLAMP BRKT+ENC+SW MNT	
AHM0762	8	1	SHAFT HEAD-100 STROKE JACK	
AHM0764	9	1	M16 BUSH-100 STROKE JACK	
AHM0767	10	1	JACK SCREW-100 STROKE JACK	
AHM0768	11	1	DRIVE MOUNT-100 STROKE JACK	
AHM0769	12	1	RETAIN PLATE-100 STROKE JACK	
AJC0084	13	1	TONIC ENCODER MOUNT STRIP	
AJC0086	14	1	HEX CONN PLT-12WTT 15WD-23HSX MOT	
CJP0084	15*	1	STD MTR(SER) +LIM+OT+TONIC	
FHSZ2002	16	3	SCR HT GRU M03.0 X 006 CL12.9	
FSNB0002	17	4	NUT ST M03.0	
FSNB0004	18	4	NUT ST M05.0	
FSSB0001	19	6	SCR ST BUT M03.0 X 006	
FSSB0033	20	2	SCR ST CAP M04.0 X 008 SET	
FSSB0036	21	1	SCR ST CAP M04.0 X 012	
FSSB0043	22	7	SCR ST CAP M05.0 X 012	
FSSB0044	23	9	SCR ST CAP M05.0 X 016	
FSSB0070	24	4	SCR ST CAP M08.0 X 030 SET	
FSSB0711	25	2	SCR ST CSK M02.5 X 010	
FSSB0872	26	2	SCR ST SHLD 04DIA (M03) X 06LG	
FSSB0874	27	4	SCR ST BUT M03.0 X 008	
FSSB0943	28	4	SCR ST CHS M02.0 X 016 SET	
FSSB2089	29	2	SCR ST GRU M08.0 X 020 SKT	

REV	DATE	DMR	DESCRIPTION
05	30/06/15	0106594	AHJ0183: INTRODUCE 2 x M8 GRUB SCREWS
04	03/10/14	0106233	WIRING DIAGRAM NOW CJP0084
03	28/07/14	0106005	MCMM0053 REPLACED WITH MCMM0054

THIS DRAWING BELONGS TO FMB OXFORD. THIS DRAWING HAS BEEN ISSUED ON CONDITION THAT IT IS NOT COPIED,REPRINTED OR DISCLOSED EITHER WHOLLY OR IN PART DETAIL TO A THIRD PARTY WITHOUT PRIOR CONSENT IN WRITING FROM FMB OXFORD,OSNEY MEAD, OXFORD, ENGLAND

TOLERANCES UNLESS STATED
X ± 0.5mm
X.X ± 0.3mm
X.XX ± 0.1mm
ANGLE ± 0°15'

MATERIAL:

SURFACE FINISH 1.6µm UNLESS STATED

FINISH :CLEAN

SHEET 3 OF 4

mm UNLESS STATED

DATE 30/06/15

DESCRIPTION
JACK ±50-12W-TONIC-25:1

DRAWN julian.wiatrzyk

STATUS RELEASED

FMB Oxford

DRAWING NUMBER AJM0012

REV 05

A3 ORIGINAL SIZE DO NOT SCALE

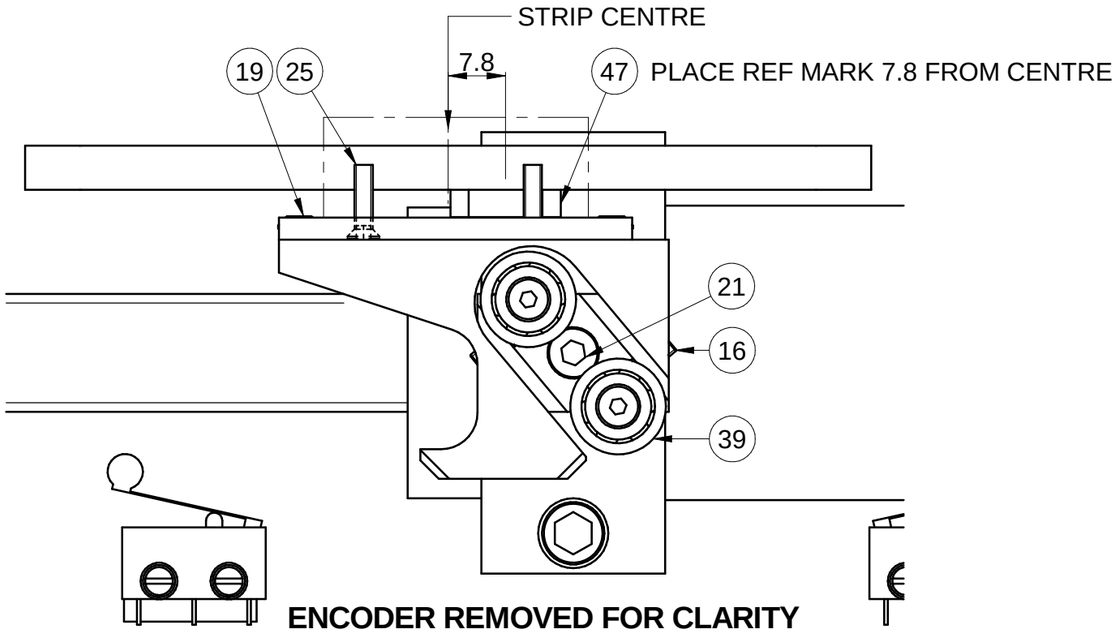

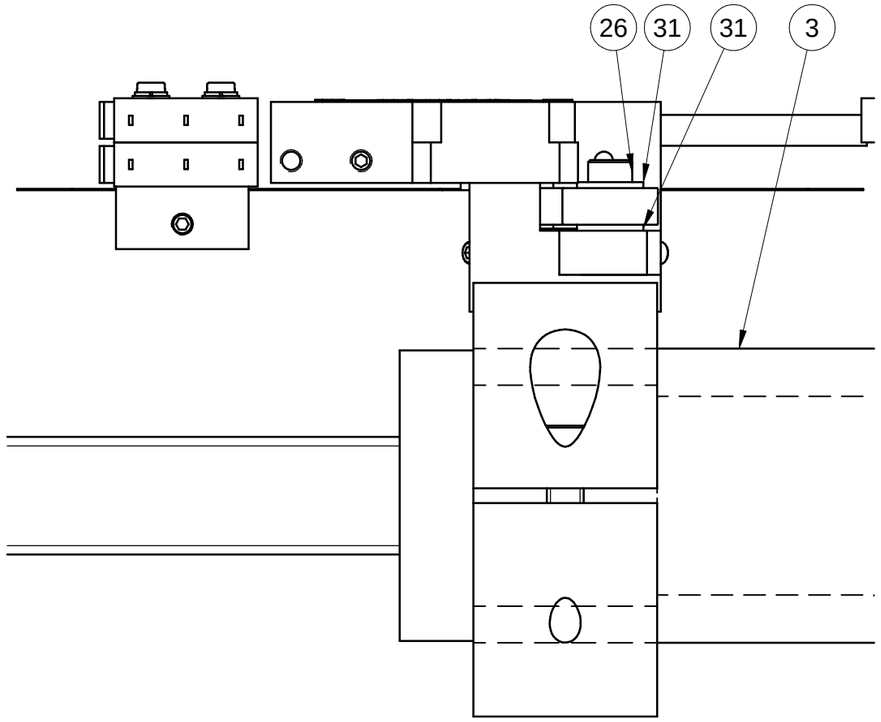

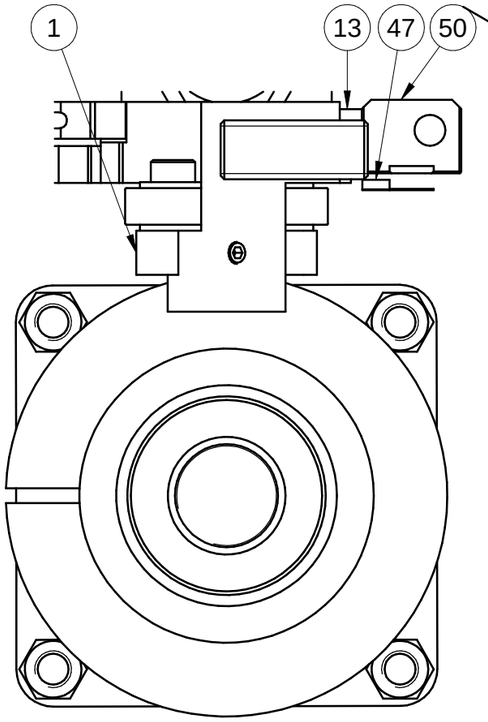

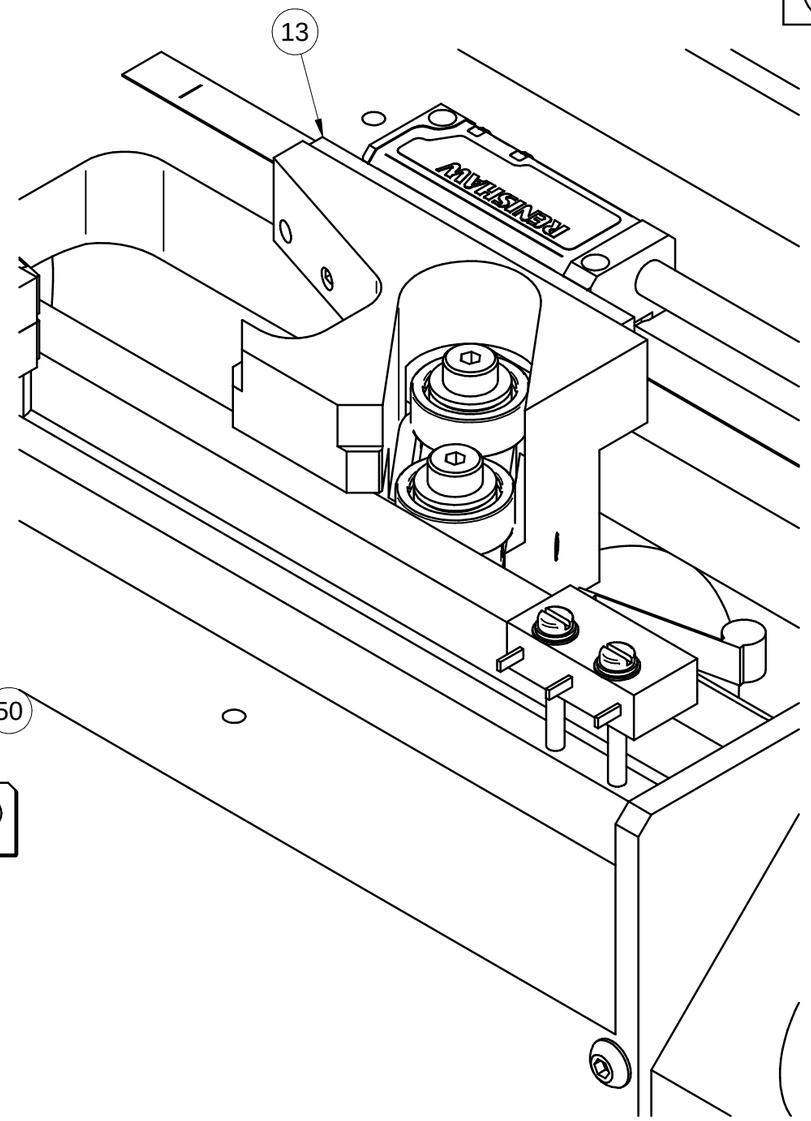

DETAILS OF ANTI-ROTATION & ENCODER ASSEMBLY

REV	DATE	DMR	DESCRIPTION
05	30/06/15	0106594	AHJ0183: INTRODUCE 2 x M8 GRUB SCREWS
04	03/10/14	0106233	WIRING DIAGRAM NOW CJP0084
03	28/07/14	0106005	MCMM0053 REPLACED WITH MCMM0054

THIS DRAWING BELONGS TO FMB OXFORD. THIS DRAWING HAS BEEN ISSUED ON CONDITION THAT IT IS NOT COPIED,REPRINTED OR DISCLOSED EITHER WHOLLY OR IN PART DETAIL TO A THIRD PARTY WITHOUT PRIOR CONSENT IN WRITING FROM FMB OXFORD,OSNEY MEAD, OXFORD, ENGLAND

TOLERANCES UNLESS STATED
X ± 0.5mm
X.X ± 0.3mm
X.XX ± 0.1mm
ANGLE ± 0°15'

MATERIAL:

SURFACE FINISH 1.6µm UNLESS STATED

FINISH :CLEAN

SHEET 4 OF 4

mm UNLESS STATED

DATE 30/06/15

DESCRIPTION
JACK ±50-12W-TONIC-25:1

DRAWN julian.wiatrzyk

STATUS **RELEASED**

FMB Oxford

DRAWING NUMBER AJM0012

REV 05

A3 ORIGINAL SIZE DO NOT SCALE

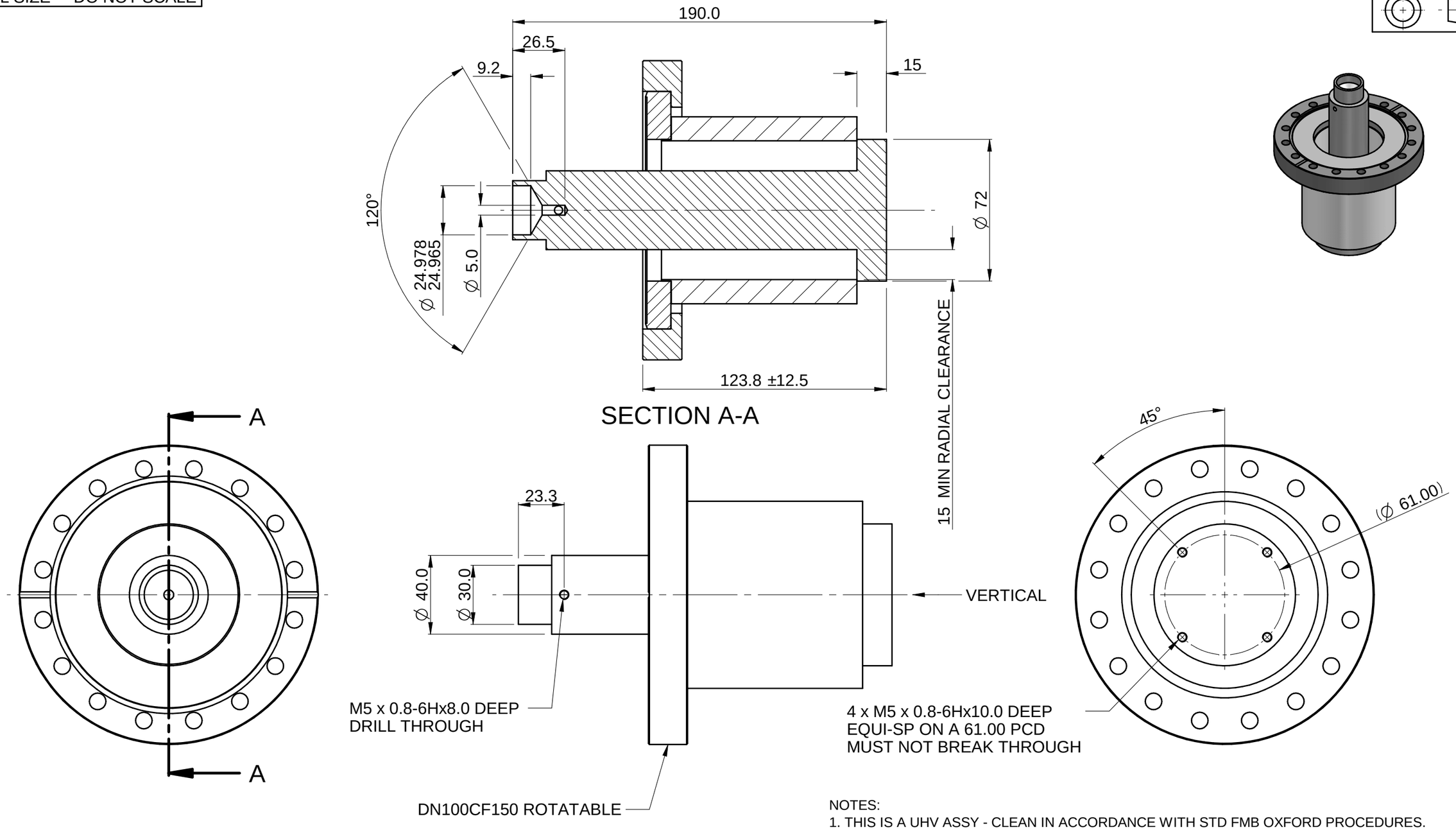

NOTES:
1. THIS IS A UHV ASSY - CLEAN IN ACCORDANCE WITH STD FMB OXFORD PROCEDURES.
2. NO SILICONE OR SULPHUR BASED FLUIDS ARE TO BE USED.
3. VACUUM SEALING FACES TO BE FREE FROM RADIAL SCRATCHES AND TO BE PROTECTED DURING HANDLING, TRANSIT AND STORAGE.
4. ALL COMPONENTS TO BE MADE FROM STAINLESS STEEL GRADE 304
5. VERTICAL STROKE: +/- 12.5 mm
6. LATERAL STROKE:+/- 12.5 mm
7. NO ROTATIONS
8. EXTREMES OF MOVEMENT MUST ALL BE ACHIEVABLE SIMULTANEOUSLY.
9. SUPPLIER TO DETERMINE BELLOWS TO JACK POST MACHINED & WELDED DETAIL.
10. UNIT TO BE LEAK TESTED TO 1x10-10 mBAR l/s He-CERT REQUIRED

REV	DATE	DMR	DESCRIPTION
02	28/04/15	-	FDR ISSUE

THIS DRAWING BELONGS TO FMB OXFORD. THIS DRAWING HAS BEEN ISSUED ON CONDITION THAT IT IS NOT COPIED,REPRINTED OR DISCLOSED EITHER WHOLLY OR IN PART DETAIL TO A THIRD PARTY WITHOUT PRIOR CONSENT IN WRITING FROM FMB OXFORD,OSNEY MEAD, OXFORD, ENGLAND

TOLERANCES UNLESS STATED
X ± 0.5mm
X.X ± 0.3mm
X.XX ± 0.1mm
ANGLE ± 0°15'

MATERIAL:

SURFACE FINISH 1.6µm UNLESS STATED

FINISH: CLEAN

SHEET 1 OF 1

mm UNLESS STATED

DATE 28/04/15

DESCRIPTION
JACK POST ASSY+-12.5 VERT/LAT

DRAWN julian.wiatrzyk

STATUS

FMB Oxford

DRAWING NUMBER AMC1594

REV 02

A3 ORIGINAL SIZE DO NOT SCALE

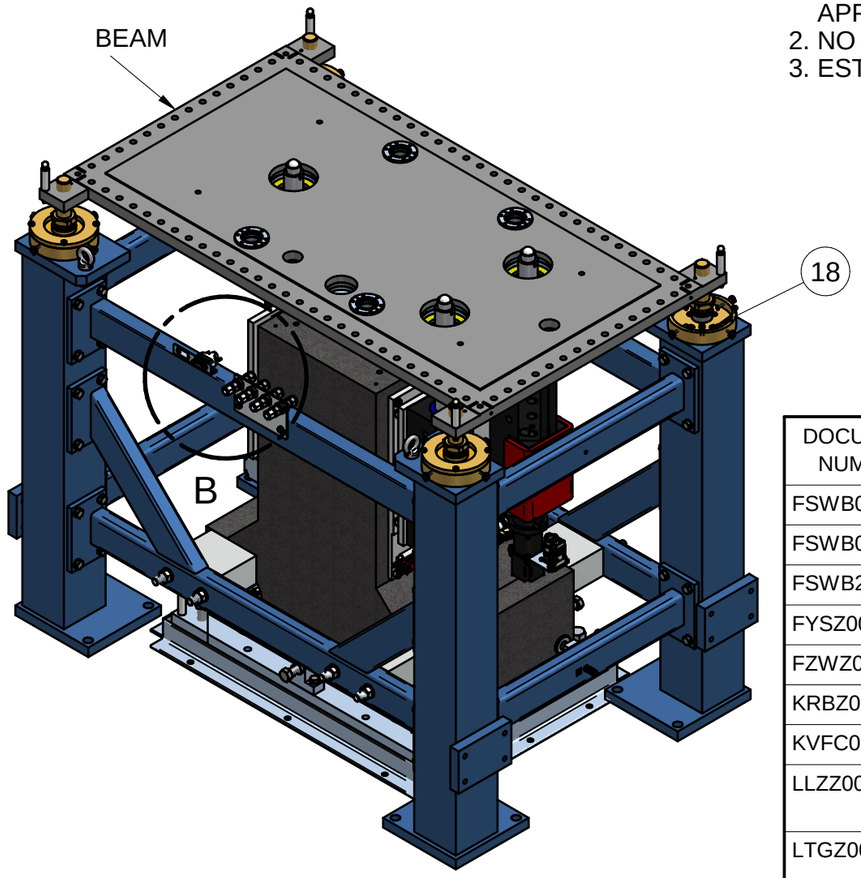

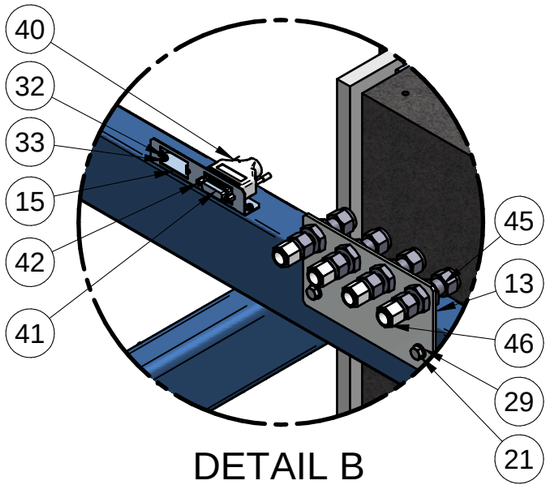

DETAIL B

NOTES:-
1. THIS IS A UHV ASSY - CLEAN IN ACCORDANCE WITH APPROPRIATE PROCEDURES.
2. NO SILICONE OR SULPHUR BASED FLUIDS ARE TO BE USED.
3. ESTIMATED WEIGHT = 980 kg

DOCUMENT NUMBER	ITEM NUMBER	QTY	TITLE	COMMENTS
FSWB0005	29	18	WASHER ST M06.0	
FSWB0006	30	56	WASHER ST M08.0	
FSWB2002	31	5	WASHER ST LOCK M02.5	
FYSZ0005	32	3	SCR B/Zn PAN M03.0 X 010 POZ	
FZWZ0012	33	3	WASHER B/Zn M03.0	
KRBZ0046	34	1	DN40 BURST DISK	420033
KVFC0074	35	2	CF70 9 PIN SUB-D FEEDTHRO	
LLZZ0001	36	4	LIFTING EYE BOLT M16 BS4278	
LTGZ0013	37	3	BALL CHROME STEEL DIA 25.0mm	
LTGZ0013MO	38*	3	MoS2 COATING-BALL 25mm	
LTZZ0055	39	4	TOOLING BALL 0.5 SHOULDER TYPE	
MCMM0041	40	1	HOOD D CONNECTOR METAL 15WAY	RS PT NO 447-7353
MCMM0421	41	1	SKT D TYPE CRIMP 15 WAY	
MCMM5000	42	2	D TYPE 4-40UNC COUPLING NUTS	
MZLA0003	43	2	EARTH WARNING LABEL 12.5x12.5	SELF ADHESIVE
VCFZ0002	44	1	DN063 CF114 BLANK	
VSBS0008	45	4	S/L B/HD UNION 10.0 X 10.0	
VSRS0049	46	4	S/L REDUCER 12mm 10mm STUB	

DOCUMENT NUMBER	ITEM NUMBER	QTY	TITLE	COMMENTS
AAM0044	1	2	DRIVE-EXT TRANS 12W TT+ENC-50:1	
ABF03170	2	4	FOOT SCREW IN M30 +- 25	
AHM0846	3	4	FIDUCIAL POST 50LG	
AJM0012	4	3	JACK ±50-12W-TONIC-25:1	
AMA01703	5	3	THERMAL BREAK-JACK	
AMC1589	6	1	FLOOR PLT ASSY-M1/3-BMM-NIST	
AMC1591	7	1	GRANITE BASE-M1-BMM-NIST	
AMC1592	8	1	VESSEL BASE ASSY-M1-BMM-NIST	
AMC1594	9	3	JACK POST ASSY+-12.5 VERT/LAT	
AMC1597	10	1	FRAME ASSY-M1-BMM-NIST	
AMC1637	11	2	Pb ENCODER COVER	
AMC1710	12	3	Pb SHIELD-VERT JACK	
AMC1771	13	1	4 X 10 OD COOLING BULKHEAD PLT	
AMP0133	14	1	ROLL MICROSW ASSY 240 CTRS	
AZC0447	15	1	TONIC INTERPOLATOR BRKT-2 WAY	
CMP0231	16*	1	S3127 M1/M2 IN AIR WIRING	
FSSB0060	17	4	SCR ST CAP M06.0 X 040	
FSSB0067	18	16	SCR ST CAP M08.0 X 016 SET	
FSSB0084	19	7	SCR ST CAP M10.0 X 025 SET	
FSSB0092	20	12	SCR ST CAP M10.0 X 80 SET	
FSSB0146	21	2	SCR ST HEX M06.0 X 016 SET	
FSSB0282	22	5	SCR ST CAP M02.5 X 020	
FSSB0559	23	12	SCR ST HEX M06.0 X 025 SP	SILVER PLATED
FSSB0732	24	56	SCR ST HEX M08.0 X 030 SP*	SILVER PLATED
FSSB0768	25	12	SCR ST BUT M03.0 X 016	
FSSB0813	26	12	SCR ST CAP M05.0 X 030 SET	SILVER PLATED
FSWB0001	27	5	WASHER ST M02.5	
FSWB0002	28	12	WASHER ST M03.0	

REV	DATE	DMR	DESCRIPTION
02	28/04/15	-	FDR ISSUE

THIS DRAWING BELONGS TO FMB OXFORD. THIS DRAWING HAS BEEN ISSUED ON CONDITION THAT IT IS NOT COPIED,REPRINTED OR DISCLOSED EITHER WHOLLY OR IN PART DETAIL TO A THIRD PARTY WITHOUT PRIOR CONSENT IN WRITING FROM FMB OXFORD,OSNEY MEAD, OXFORD, ENGLAND

TOLERANCES UNLESS STATED
X ± 0.5mm
X.X ± 0.3mm
X.XX ± 0.1mm
ANGLE ± 0°15'

MATERIAL:

SURFACE FINISH 1.6µm UNLESS STATED

FINISH: CLEAN

SHEET 1 OF 2

mm UNLESS STATED

DATE 28/04/15

DESCRIPTION
BASE ASSY-M1-BMM-NIST

DRAWN julian.wiatrzyk

STATUS

FMB Oxford

DRAWING NUMBER AMM0262

REV 02

A3 ORIGINAL SIZE DO NOT SCALE

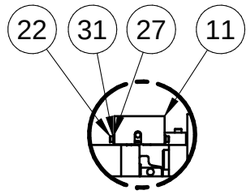

DETAIL D

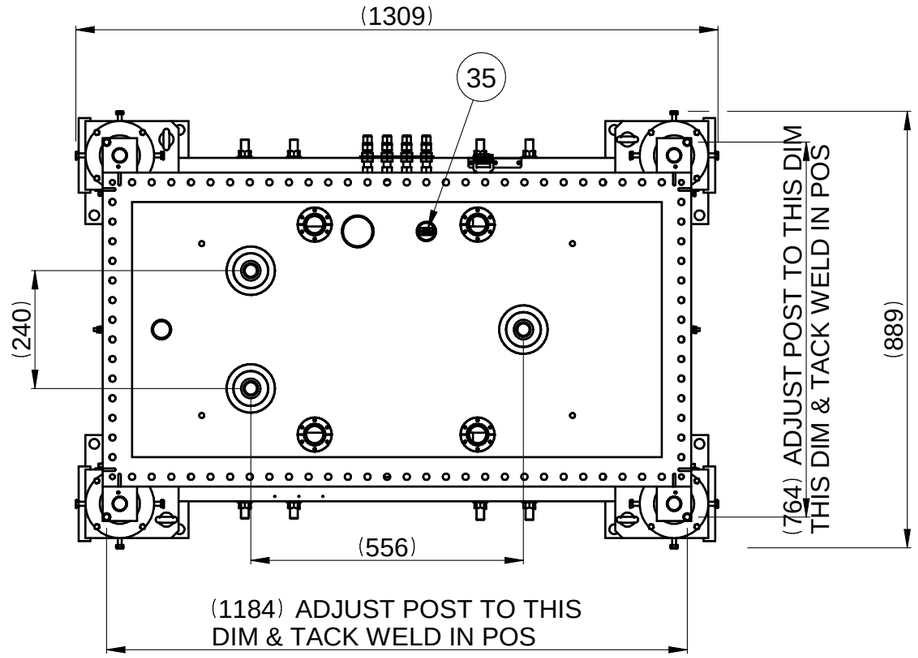

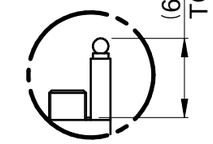

DETAIL A

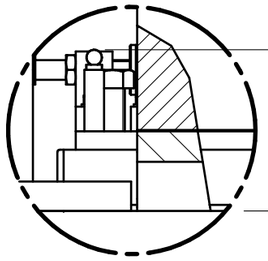

DETAIL C

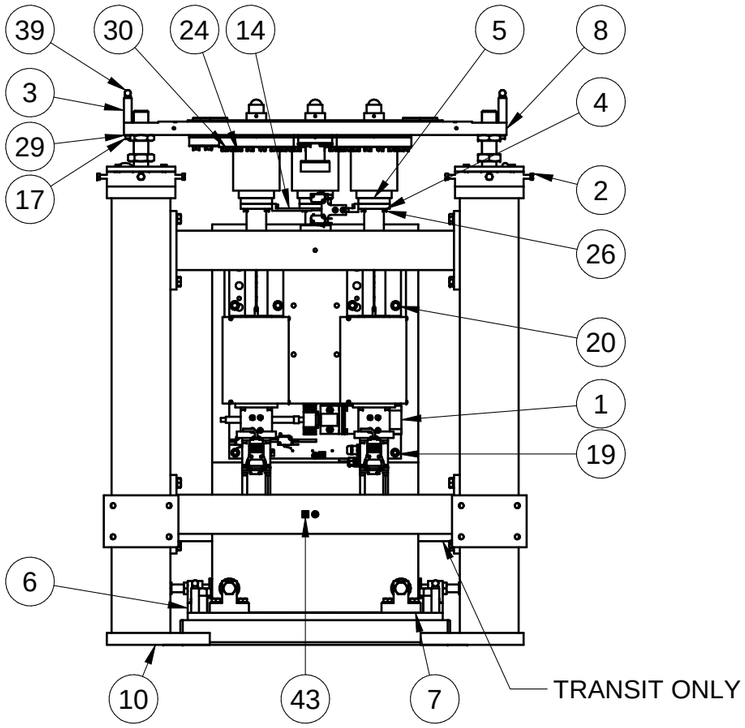

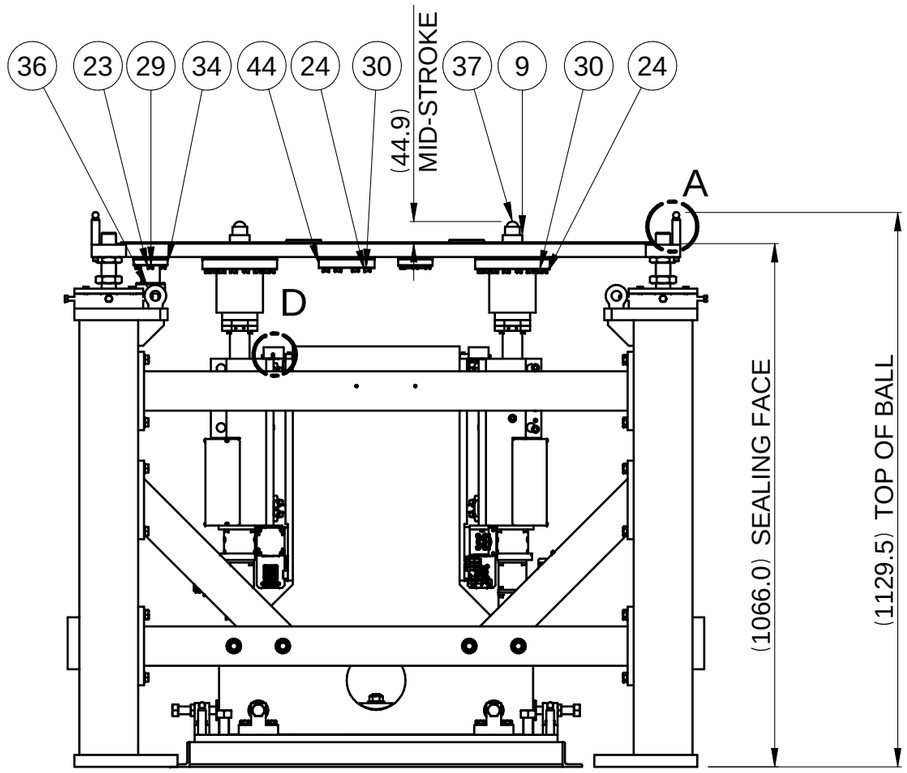

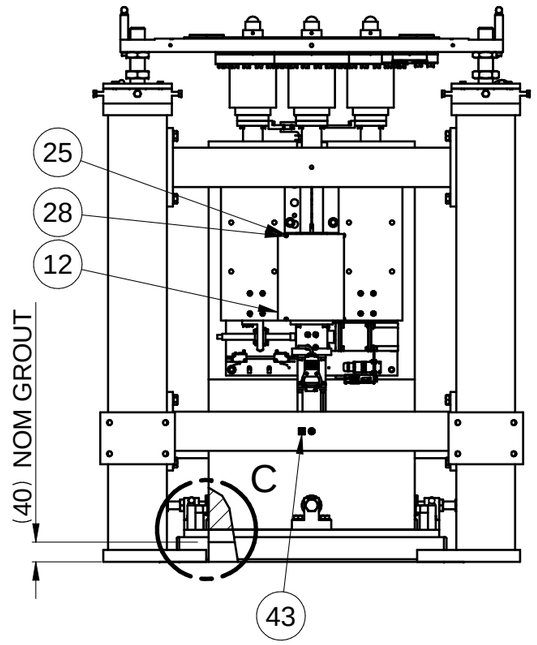

REV	DATE	DMR	DESCRIPTION
02	28/04/15	-	FDR ISSUE

THIS DRAWING BELONGS TO FMB OXFORD. THIS DRAWING HAS BEEN ISSUED ON CONDITION THAT IT IS NOT COPIED,REPRINTED OR DISCLOSED EITHER WHOLLY OR IN PART DETAIL TO A THIRD PARTY WITHOUT PRIOR CONSENT IN WRITING FROM FMB OXFORD,OSNEY MEAD, OXFORD, ENGLAND

TOLERANCES UNLESS STATED
X ± 0.5mm
X.X ± 0.3mm
X.XX ± 0.1mm
ANGLE ± 0°15'

MATERIAL:

SURFACE FINISH 1.6µm UNLESS STATED

FINISH: CLEAN

SHEET 2 OF 2

mm UNLESS STATED

DATE 28/04/15

DESCRIPTION
BASE ASSY-M1-BMM-NIST

DRAWN julian.wiatrzyk

STATUS

FMB Oxford

DRAWING NUMBER AMM0262

REV 02

A3 ORIGINAL SIZE DO NOT SCALE

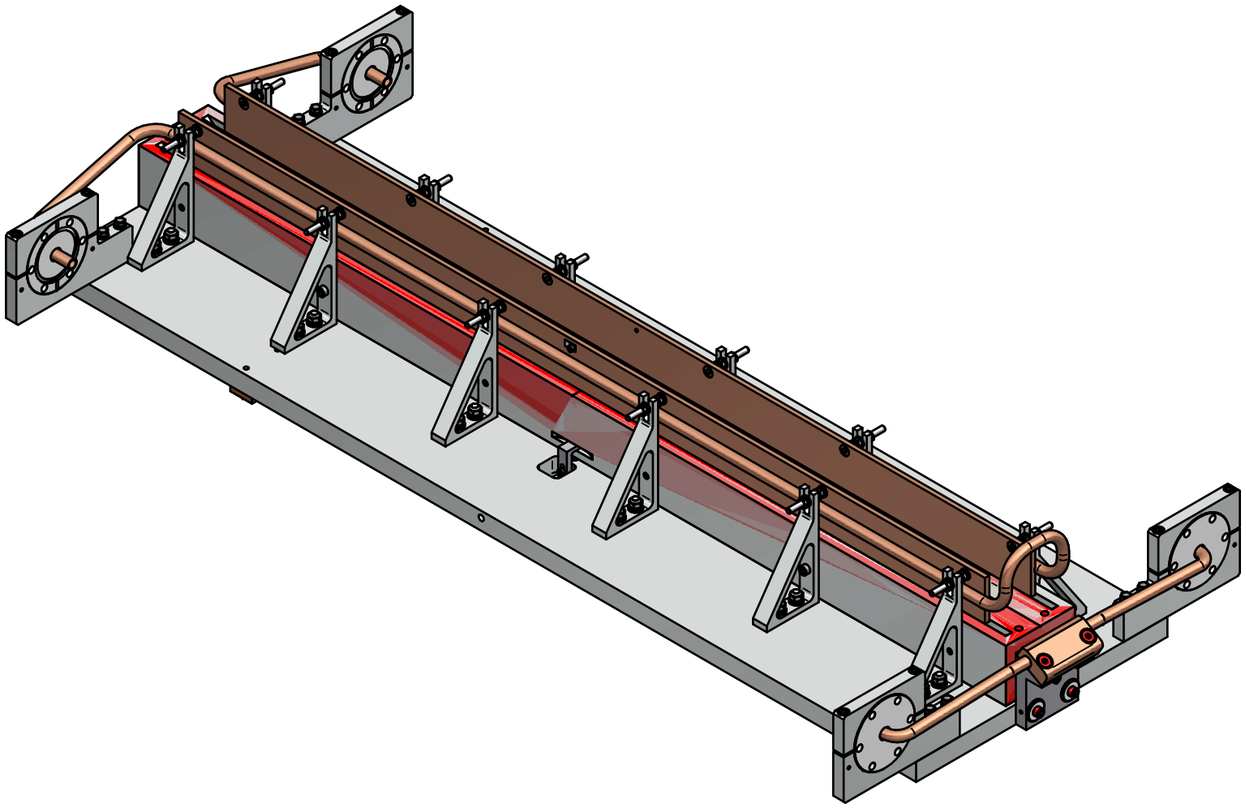

NOTES:-
1. THIS IS A UHV ASSY - CLEAN IN ACCORDANCE WITH APPROPRIATE PROCEDURES.
2. NO SILICONE OR SULPHUR BASED FLUIDS ARE TO BE USED.
3. ESTIMATED WEIGHT = 50 kg

DOCUMENT NUMBER	ITEM NUMBER	QTY	TITLE	COMMENTS
AHM0675	1	1	KINEMATIC FLAT 25DIA-T MODULE	
AHM0676	2	1	KINEMATIC CONE 25DIA-T MODULE	
AHM0677	3	1	KINEMATIC VEE 25DIA-TMODULE	
AHM3084	4	1	LEAF SPRING	
AHM4745	5	3	KINEMATIC MIRROR MOUNT M5	
AHM4745MO	6*	3	MOS2 COAT KIN. MIRROR MT M5	
AHM5223	7	3	MIRROR CLAMP-SLOTTED-ST ST	
AHM6291	8	2	LEAF SPRING-STRADDLED	
AHS0569	9	2	T/C CLIP	
AKM0025	10*	3	MOLY COATING - AMC0438	
AMC0438	11	3	KINEMATIC PIN-DIA 10 X 5 LG	
AMC1588	12	1	M1 (V+HCM) OPTIC-BMM-NIST	
AMC1600	13	1	MIRROR BASE 1000mm	
AMC1606	14	12	COOLING SUPPORT+KIN PIN	
AMC1618	15	3	KINEMATIC MIRROR CLAMP-PEEK	
AMC1634	16	1	DUMMY OPTIC-M1-BMM-NIST	
AMC1973	17	4	FLANGE CLAMP-SPLIT	
AMM0265	18	1	COOLING BLADE ASSY-M1-BMM-NIST	
AMM0266	19	1	MASK ASSY-M1-BMM-NIST	
FSGB0095	20	29	STUDDING ST M06.0 FULL THD SP	CUT TO LENGTH SILVER PLATED
FSGB0096	21	3	STUDDING M05X030 LG SPV	SILVER PLATED & VENTED
FSNB0004	22	42	NUT ST M05.0	
FSNB0005	23	29	NUT ST M06.0	
FSSB0025	24	6	SCR ST CAP M03.0 X 006 SET	
FSSB0043	25	2	SCR ST CAP M05.0 X 012	
FSSB0044	26	4	SCR ST CAP M05.0 X 016	
FSSB0784	27	12	SCR ST CSK M05.0 X 045	SILVER PLATED
FSSB0791	28	2	SCR ST CAP M03.0 X 006 SP*	SILVER PLATED
FSSB0834	29	1	SCR ST CAP M05.0 X 012 SPV	SILVER PLATED & VENTED
FSSB0872	30	3	SCR ST SHLD 04DIA (M03) X 06LG	
FSSB0872MO	31*	3	MOS2 COAT SCR ST SHLD 04DIA	
FSSB2015	32	2	SCR ST CAP M05.0x006 VENT	
FSSB2093	33	8	SCR ST CAP M05.0 X 045	
FSSB2094	34	8	SCR ST HEX M05.0 X 045	
FSWB0002	35	2	WASHER ST M03.0	
FSWB0004	36	51	WASHER ST M05.0	
FSWB0005	37	29	WASHER ST M06.0	
FSWB0019	38	29	WASHER ST LOCK M06.0	
FSWB0020	39	32	WASHER ST LOCK M05.0	
LSCS2010	40	3	COMP SP 07.6 O/D X 012.7 0.76	

REV	DATE	DMR	DESCRIPTION
02	28/04/15	-	FDR ISSUE

THIS DRAWING BELONGS TO FMB OXFORD. THIS DRAWING HAS BEEN ISSUED ON CONDITION THAT IT IS NOT COPIED,REPRINTED OR DISCLOSED EITHER WHOLLY OR IN PART DETAIL TO A THIRD PARTY WITHOUT PRIOR CONSENT IN WRITING FROM FMB OXFORD,OSNEY MEAD, OXFORD, ENGLAND ©2015

TOLERANCES UNLESS STATED
X ± 0.5mm
X.X ± 0.3mm
X.XX ± 0.1mm
ANGLE ± 0°15'

MATERIAL:

SURFACE FINISH 1.6µm UNLESS STATED

FINISH: CLEAN

SHEET 1 OF 2

mm UNLESS STATED

DATE 28/04/15

DESCRIPTION
MIRROR MNT 1000-VERT-COOLED

DRAWN julian.wiatrzyk

STATUS

FMB Oxford

DRAWING NUMBER AMM0263

REV 02

A3 ORIGINAL SIZE DO NOT SCALE

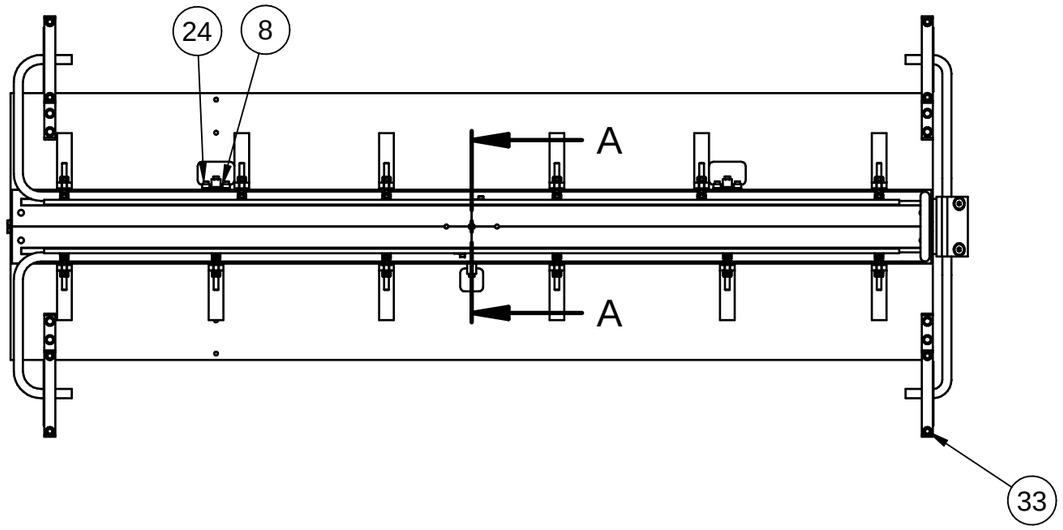

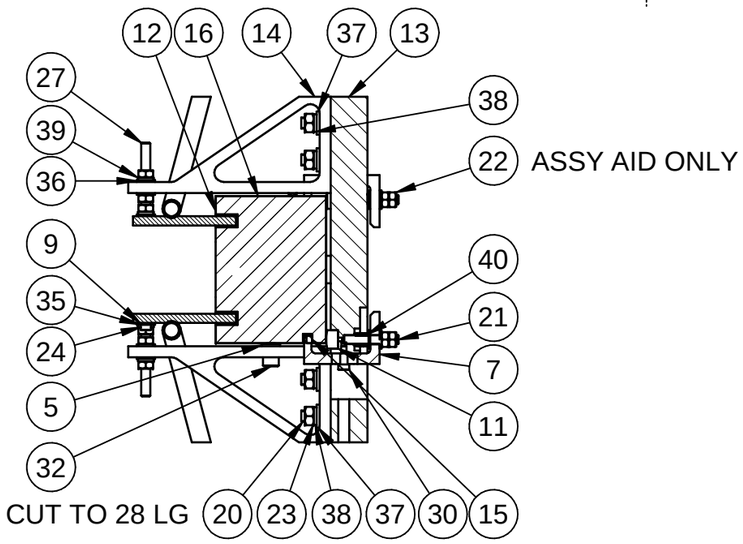

SECTION A-A

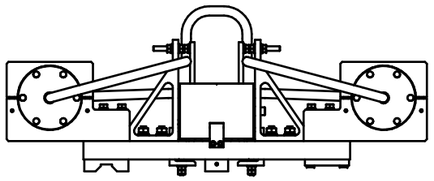

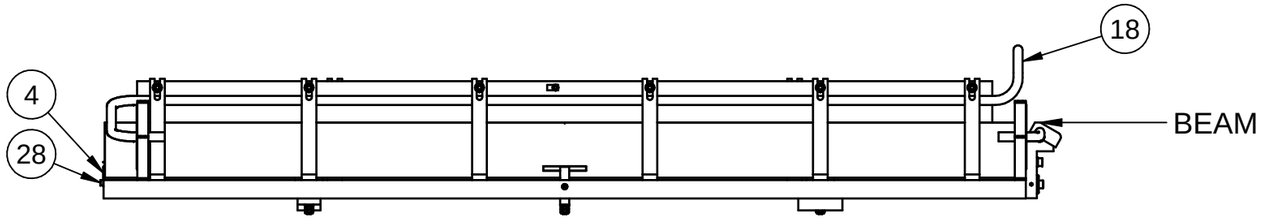

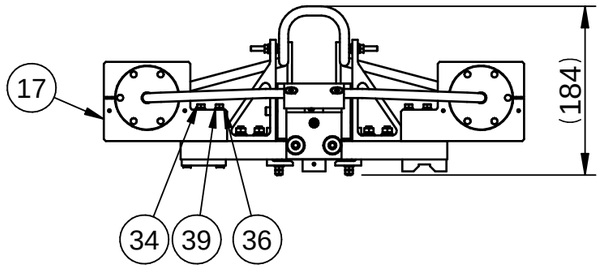

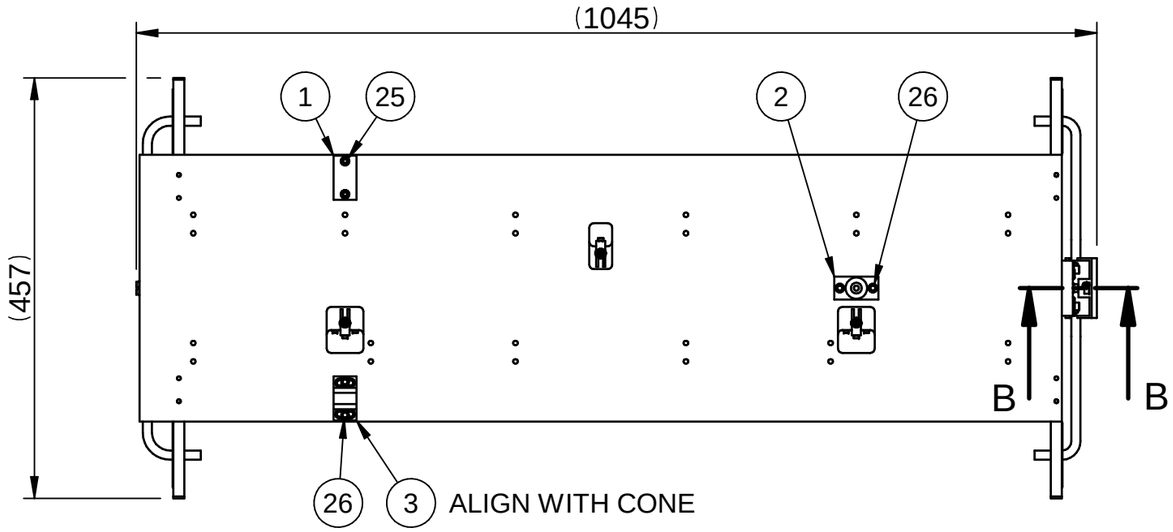

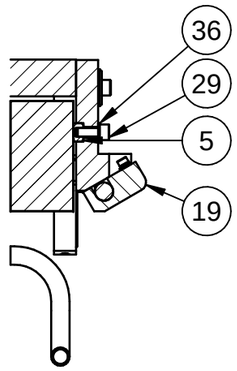

SECTION B-B

REV	DATE	DMR	DESCRIPTION
02	28/04/15	-	FDR ISSUE

THIS DRAWING BELONGS TO FMB OXFORD. THIS DRAWING HAS BEEN ISSUED ON CONDITION THAT IT IS NOT COPIED,REPRINTED OR DISCLOSED EITHER WHOLLY OR IN PART DETAIL TO A THIRD PARTY WITHOUT PRIOR CONSENT IN WRITING FROM FMB OXFORD,OSNEY MEAD, OXFORD, ENGLAND ©2015

TOLERANCES UNLESS STATED
X ± 0.5mm
X.X ± 0.3mm
X.XX ± 0.1mm
ANGLE ± 0°15'

MATERIAL:

SURFACE FINISH 1.6µm UNLESS STATED

FINISH: CLEAN

SHEET 2 OF 2

mm UNLESS STATED

DATE 28/04/15

DESCRIPTION
MIRROR MNT 1000-VERT-COOLED

DRAWN julian.wiatrzyk

STATUS

FMB Oxford

DRAWING NUMBER AMM0263

REV 02

A3 ORIGINAL SIZE DO NOT SCALE

Motion	Range
Ty Vertical Translation	±10 mm
Tx Lateral Translation	±10 mm
Rx Adjustment (Pitch)	±1°
Rz Adjustment (Roll)	±1°
Ry Adjustment (Yaw)	±1°

NOTES:-

1. THIS IS A UHV ASSY-CLEAN IN ACCORDANCE WITH STD FMB OXFORD PROCEDURES.
2. N O SILICONE OR SULPHUR BASED FLUIDS ARE TO BE USED.
3. VACUUM SEALING FACES TO BE FREE FROM RADIAL SCRATCHES AND TO BE PROTECTED DURING HANDLING, TRANSIT AND STORAGE.
4. ESTIMATED WEIGHT = 1250 kg
5. LEAK TEST TO <1 x10-10 mbar l/sec He
6. REQUIRED BASE PRESSURE <1 x 10 -9 mbar
7. PRESSURE TEST COOLING CIRCUITS TO 10 bar

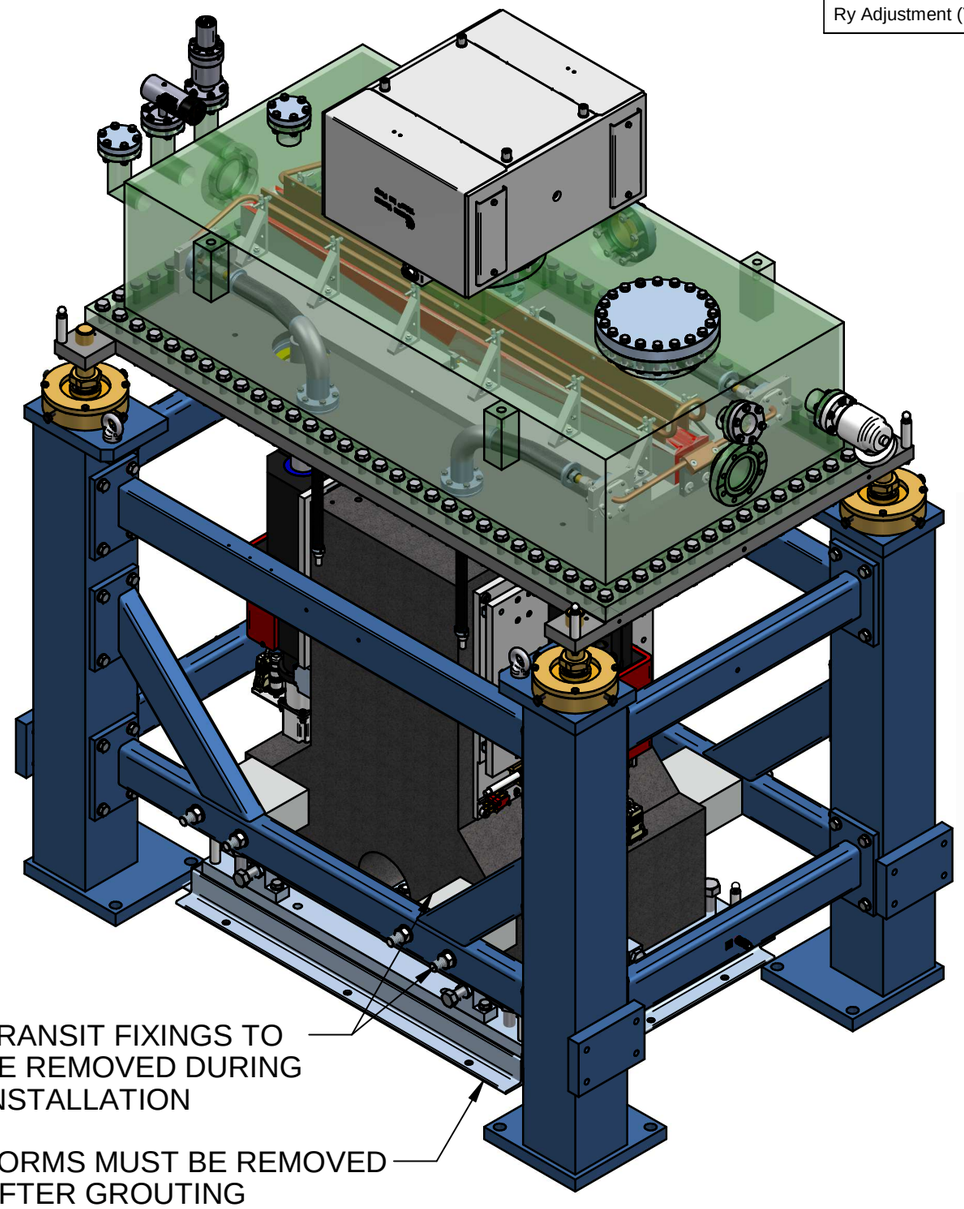

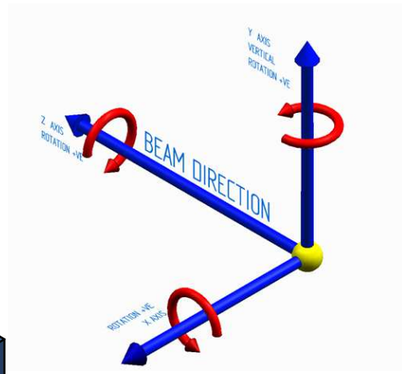

DOCUMENT NUMBER	ITEM NUMBER	QTY	TITLE	COMMENTS
AMC1624	1	1	MIRROR VESSEL-M1-BMM-NIST	
AMM0262	2	1	BASE ASSY-M1-BMM-NIST	
AMM0263	3	1	MIRROR MNT 1000-VERT-COOLED	
AMM0267	4	4	AIR SHIELDED HOSE-150 LG-RH	
AMP0148	5*	1	ACCESS KIT-MIRRORS-BMM-NIST	
CMP0254	6*	1	S3160 VHCM BMM M1 BLK DIAG	
CMP0255	7*	1	S3160 VHCM BMM M1 TC WIRING	
FSGB0079	8	20	STUDDING ST M08.0x055 FULL THD	SILVER PLATED
FSNB0005	9	36	NUT ST M06.0	
FSNB0006	10	48	NUT ST M08.0	
FSNB0008	11	88	NUT ST M12.0	
FSSB0559	12	24	SCR ST HEX M06.0 X 025 SP	SILVER PLATED
FSSB0608	13	8	SCR ST HEX M08.0 X 045 SP	SILVER PLATED
FSSB0676	14	63	SCR ST HEX M06.0 X 035 SP	SILVER PLATED
FSSB0725	15	20	SCR ST HEX M08.0 X 055 SP	SILVER PLATED
FSSB0785	16	88	SCR ST HEX M12.0 X 075 SP*	SILVER PLATED
FSWB0005	17	87	WASHER ST M06.0	
FSWB0006	18	48	WASHER ST M08.0	
FSWB0008	19	88	WASHER ST M12.0	
KVGZ0295	20	1	GAUGE COLD CATHODE MKS DN40	1042200006
KVGZ0296	21	1	GAUGE PIRANI MKS DN40	103170034SH
KVPI2029	22	1	ION PUMP-300 l/s-GAMMA LOW	
KVVR0061	23	1	ANGLE VALVE VAT SERIES 54 DN40	
VCFZ0009	24	1	DN160 CF203 BLANK	
VCFZ0018	25	2	DN040 CF70 BLANK	
VCNZ0008	26	15	NUT PLATE CF070	
VCWZ0016	27	1	VIEWPORT CF070 DIA 38 KOD/LG	
VCWZ0019	28	1	VIEWPORT CF114 GLASS LEAD	
WAZZ0126	29*	1	GALLIUM INDIUM EUTECTIC 99.99%	

REV	DATE	DMR	DESCRIPTION
02	28/04/15	-	FDR ISSUE

THIS DRAWING BELONGS TO FMB OXFORD. THIS DRAWING HAS BEEN ISSUED ON CONDITION THAT IT IS NOT COPIED,REPRINTED OR DISCLOSED EITHER WHOLLY OR IN PART DETAIL TO A THIRD PARTY WITHOUT PRIOR CONSENT IN WRITING FROM FMB OXFORD,OSNEY MEAD, OXFORD, ENGLAND ©2015

TOLERANCES UNLESS STATED
X ± 0.5mm
X.X ± 0.3mm
X.XX ± 0.1mm
ANGLE ± 0°15'

MATERIAL:

SURFACE FINISH 1.6µm UNLESS STATED

FINISH: CLEAN

SHEET 1 OF 4

mm UNLESS STATED

DATE 28/04/15

DESCRIPTION
M1(V+HCM) SYSTEM ASSY-BMM-NIST

DRAWN julian.wiatrzyk

STATUS Work

FMB Oxford

DRAWING NUMBER AMM0264

REV 02

A3 ORIGINAL SIZE DO NOT SCALE

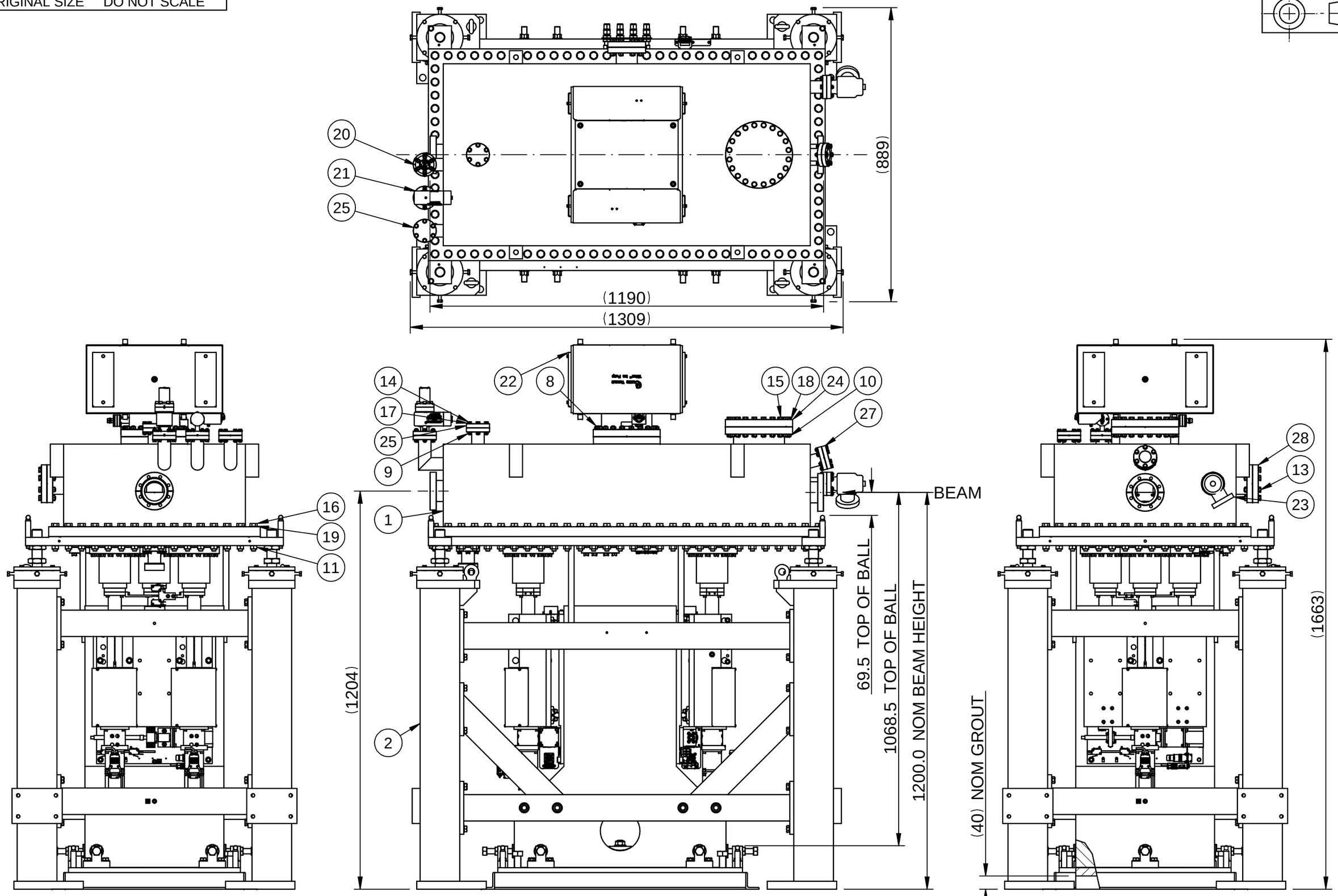

REV	DATE	DMR	DESCRIPTION
02	28/04/15	-	FDR ISSUE

THIS DRAWING BELONGS TO FMB OXFORD. THIS DRAWING HAS BEEN ISSUED ON CONDITION THAT IT IS NOT COPIED,REPRINTED OR DISCLOSED EITHER WHOLLY OR IN PART DETAIL TO A THIRD PARTY WITHOUT PRIOR CONSENT IN WRITING FROM FMB OXFORD,OSNEY MEAD, OXFORD, ENGLAND ©2015

TOLERANCES UNLESS STATED
X ± 0.5mm
X.X ± 0.3mm
X.XX ± 0.1mm
ANGLE ± 0°15'

MATERIAL:

SURFACE FINISH 1.6µm UNLESS STATED

FINISH: CLEAN

SHEET 2 OF 4

mm UNLESS STATED

DATE 28/04/15

DESCRIPTION
M1(V+HCM) SYSTEM ASSY-BMM-NIST

DRAWN julian.wiatrzyk

STATUS Work

FMB Oxford

DRAWING NUMBER AMM0264

REV 02

A3 ORIGINAL SIZE DO NOT SCALE

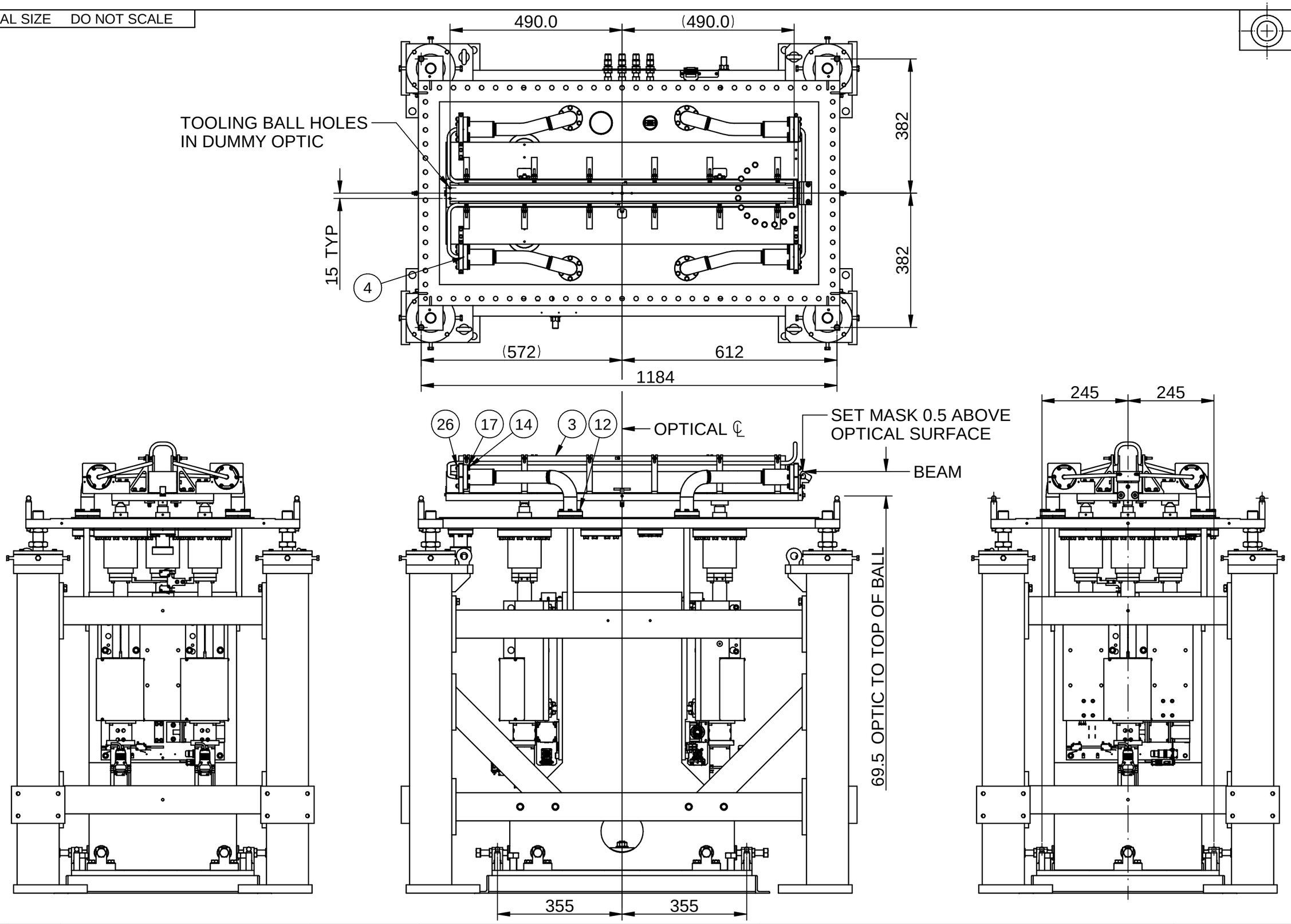

REV	DATE	DMR	DESCRIPTION
02	28/04/15	-	FDR ISSUE

THIS DRAWING BELONGS TO FMB OXFORD. THIS DRAWING HAS BEEN ISSUED ON CONDITION THAT IT IS NOT COPIED,REPRINTED OR DISCLOSED EITHER WHOLLY OR IN PART DETAIL TO A THIRD PARTY WITHOUT PRIOR CONSENT IN WRITING FROM FMB OXFORD,OSNEY MEAD, OXFORD, ENGLAND ©2015

TOLERANCES UNLESS STATED
X ± 0.5mm
X.X ± 0.3mm
X.XX ± 0.1mm
ANGLE ± 0°15'

MATERIAL:

SURFACE FINISH 1.6µm UNLESS STATED

FINISH: CLEAN

SHEET 3 OF 4

mm UNLESS STATED

DATE 28/04/15

DESCRIPTION
M1(V+HCM) SYSTEM ASSY-BMM-NIST

DRAWN julian.wiatrzyk

STATUS Work

FMB Oxford

DRAWING NUMBER AMM0264

REV 02

A3 ORIGINAL SIZE DO NOT SCALE

ITEM	QTY	DESCRIPTION
A	4	US FEDERAL SPEC - 7/16" CROSBY SCREW PIN 1178 kg @ 30° (1500 kgs)
B	4	LIFTING EYE BOLT M20 BS 4278
C	4	FLAT WEBBING SLING, 1570 kg @ 30° (2000kg SWL)
D	4	SUITABLE WOODEN BLOCKS TO PREVENT STROPS RUBBING ON VESSEL EDGES AND PRESSURE ON FLANGES
E° / F°	N/A	ALL SLING ANGLES < 60°
G	N/A	POSITION OF CENTER OF GRAVITY. TOTAL SYSTEM MASS 1250 kg. VESSEL LID = 100 kg, 170 kg WITH PUMP
H	4	LIFTING EYE BOLT M16 BS 4278

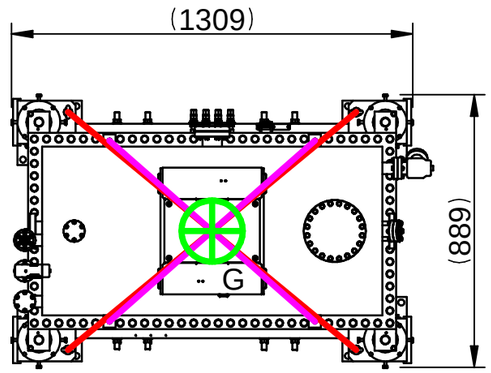

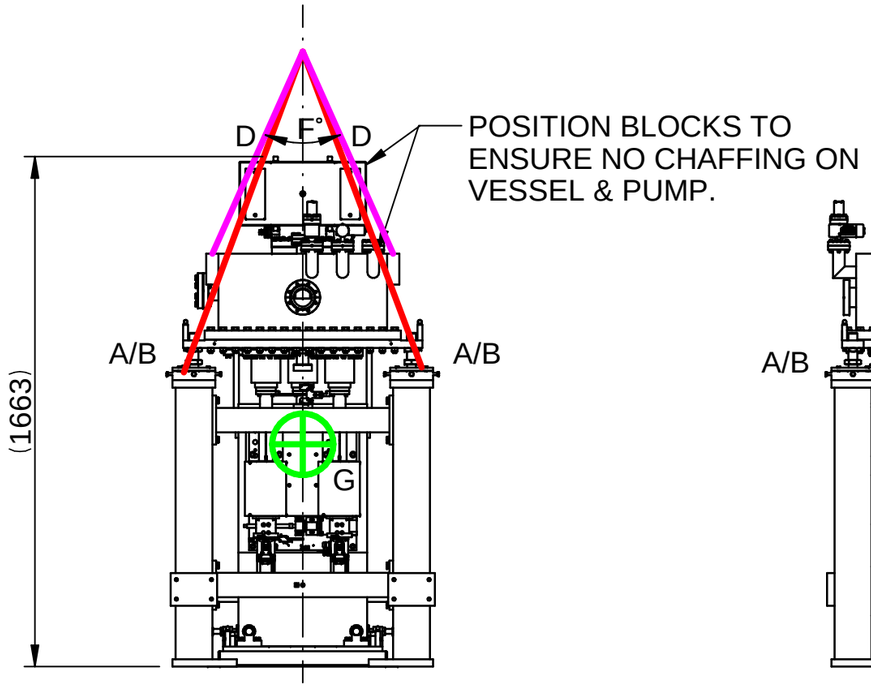

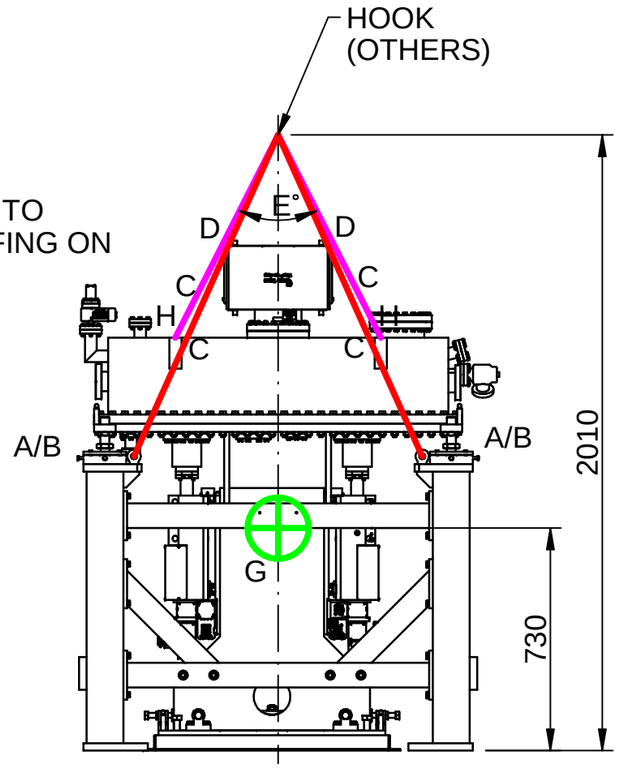

REV	DATE	DMR	DESCRIPTION
02	28/04/15	-	FDR ISSUE

THIS DRAWING BELONGS TO FMB OXFORD. THIS DRAWING HAS BEEN ISSUED ON CONDITION THAT IT IS NOT COPIED,REPRINTED OR DISCLOSED EITHER WHOLLY OR IN PART DETAIL TO A THIRD PARTY WITHOUT PRIOR CONSENT IN WRITING FROM FMB OXFORD,OSNEY MEAD, OXFORD, ENGLAND ©2015

TOLERANCES UNLESS STATED
X ± 0.5mm
X.X ± 0.3mm
X.XX ± 0.1mm
ANGLE ± 0°15'

MATERIAL:

SURFACE FINISH 1.6µm UNLESS STATED

FINISH: CLEAN

SHEET 4 OF 4

mm UNLESS STATED

DATE 28/04/15

DESCRIPTION
M1(V+HCM) SYSTEM ASSY-BMM-NIST

DRAWN julian.wiatrzyk

STATUS Work

FMB Oxford

DRAWING NUMBER AMM0264

REV 02

A3 ORIGINAL SIZE DO NOT SCALE

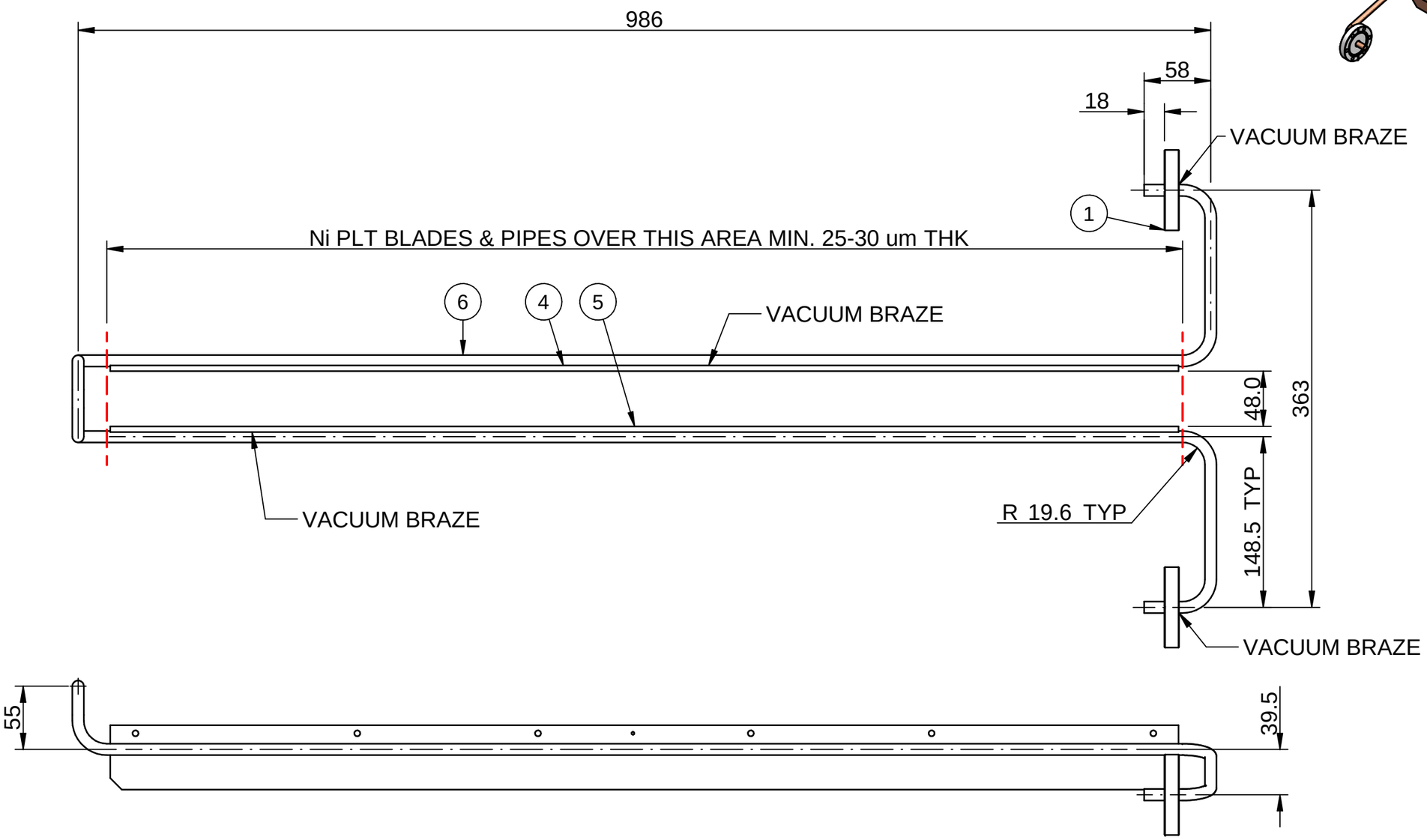

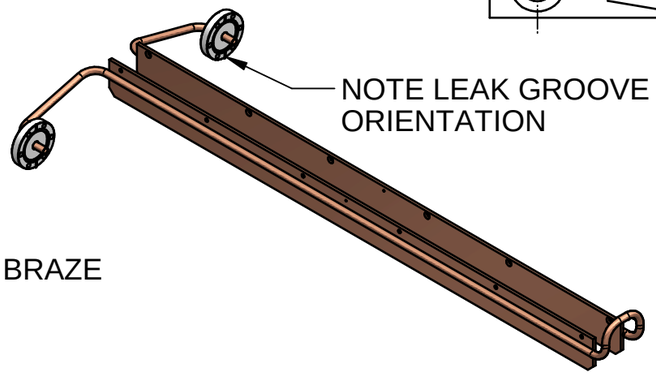

NOTES:-
1. THIS IS A UHV COMPONENT
2. NO SILICONE OR SULPHUR BASED FLUIDS ARE TO BE USED
3. NOTE LEAK GROOVE ORIENTATION
4. NICKEL PLATING TO BE DONE AFTER VACUUM BRAZING

DOCUMENT NUMBER	ITEM NUMBER	QTY	TITLE	COMMENTS
AHM0419	1	2	SPECIAL CF70 10mm BORE	
AKN0020	2*	1	NICKEL PLATE - AMM0265	
AKV0098	3*	1	VAC BRAZING - AMM0265	
AMC1605	4	1	COOL BLADE-M1-OB-BMM-NIST	
AMC1627	5	1	COOL BLADE-M1-IB-BMM-NIST	
RCTD0006	6*	1	CU TUBE 010.0 OD x 1 WALL OFHC	

REV	DATE	DMR	DESCRIPTION
02	28/04/15	-	FDR ISSUE

THIS DRAWING BELONGS TO FMB OXFORD. THIS DRAWING HAS BEEN ISSUED ON CONDITION THAT IT IS NOT COPIED,REPRINTED OR DISCLOSED EITHER WHOLLY OR IN PART DETAIL TO A THIRD PARTY WITHOUT PRIOR CONSENT IN WRITING FROM FMB OXFORD,OSNEY MEAD, OXFORD, ENGLAND ©2015

TOLERANCES UNLESS STATED
X ± 0.5mm
X.X ± 0.3mm
X.XX ± 0.1mm
ANGLE ± 0°15'

MATERIAL:

SURFACE FINISH 1.6µm UNLESS STATED

FINISH: CLEAN

SHEET 1 OF 1

mm UNLESS STATED

DATE 28/04/15

DESCRIPTION
COOLING BLADE ASSY-M1-BMM-NIST

DRAWN julian.wiatrzyk

STATUS

FMB Oxford

DRAWING NUMBER AMM0265

REV 02

A3 ORIGINAL SIZE DO NOT SCALE

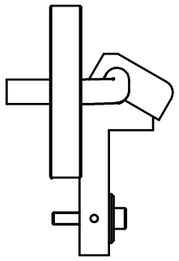

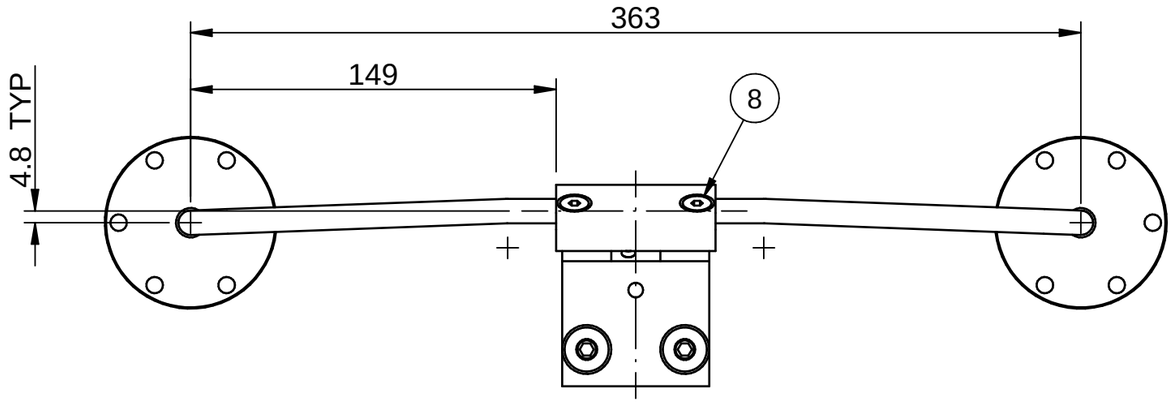

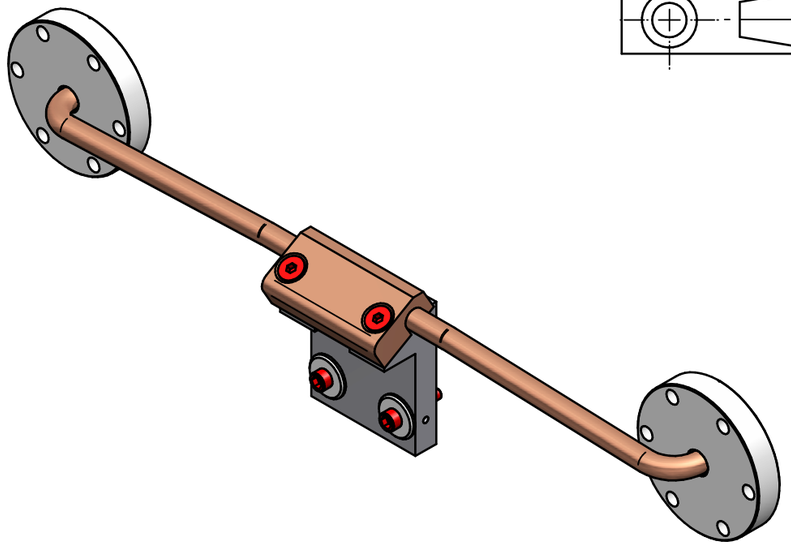

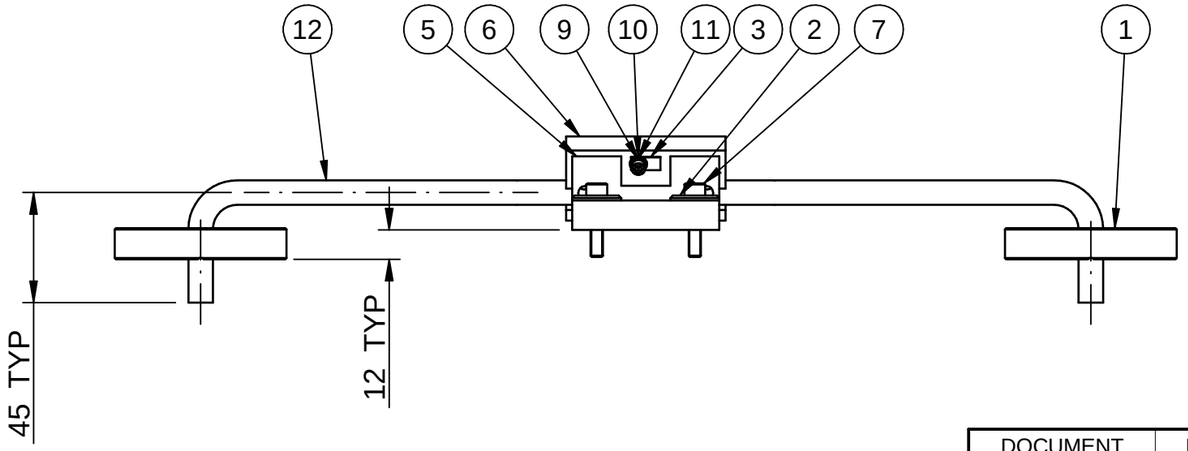

NOTES:-
1. THIS IS A UHV ASSY - CLEAN IN ACCORDANCE WITH APPROPRIATE PROCEDURES.
2. NO SILICONE OR SULPHUR BASED FLUIDS ARE TO BE USED.
3. ASSEMBLY TO BE LEAK TESTED MAX LEAK RATE <1 x 10-10mbar L/SEC He. LEAK TEST CERTIFICATES TO BE SUPPLIED
4. PRESSURE TEST TO 10 BAR

DOCUMENT NUMBER	ITEM NUMBER	QTY	TITLE	COMMENTS
AHM0419	1	2	SPECIAL CF70 10mm BORE	
AHM1519	2	2	SPECIAL WASHER	
AHS0569	3	1	T/C CLIP	
AKV0045	4*	1	VAC BRAZING - AMM0142	
AMC1612	5	1	MASK BRKT-M1-BMM-NIST	
AMC1613	6	1	MASK-M1-BMM-NIST	
FSSB0586	7	2	SCR ST CAP M05.0 X 025 SET SP	SILVER PLATED
FSSB0587	8	2	SCR ST CSK M06.0 X 020 SP	SILVER PLATED
FSSB0921	9	1	SCR ST CAP M03.0 X 006 V	
FSWB0002	10	1	WASHER ST M03.0	
FSWB0027	11	1	WASHER ST LOCK M03.0	
RCTD0006	12*	1	CU TUBE 010.0 OD x 1 WALL OFHC	

REV	DATE	DMR	DESCRIPTION
02	28/04/15	-	FDR ISSUE

THIS DRAWING BELONGS TO FMB OXFORD. THIS DRAWING HAS BEEN ISSUED ON CONDITION THAT IT IS NOT COPIED,REPRINTED OR DISCLOSED EITHER WHOLLY OR IN PART DETAIL TO A THIRD PARTY WITHOUT PRIOR CONSENT IN WRITING FROM FMB OXFORD,OSNEY MEAD, OXFORD, ENGLAND ©2015

TOLERANCES UNLESS STATED
X ± 0.5mm
X.X ± 0.3mm
X.XX ± 0.1mm
ANGLE ± 0°15'

MATERIAL:

SURFACE FINISH 1.6µm UNLESS STATED

FINISH: SEE NOTES

SHEET 1 OF 1

mm UNLESS STATED

DATE 28/04/15

DESCRIPTION
MASK ASSY-M1-BMM-NIST

DRAWN julian.wiatrzyk

STATUS

FMB Oxford

DRAWING NUMBER AMM0266

REV 02

A3 ORIGINAL SIZE DO NOT SCALE

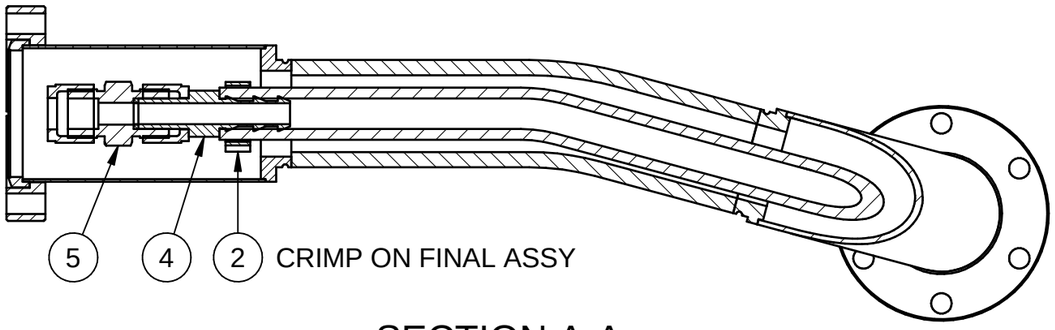

SECTION A-A

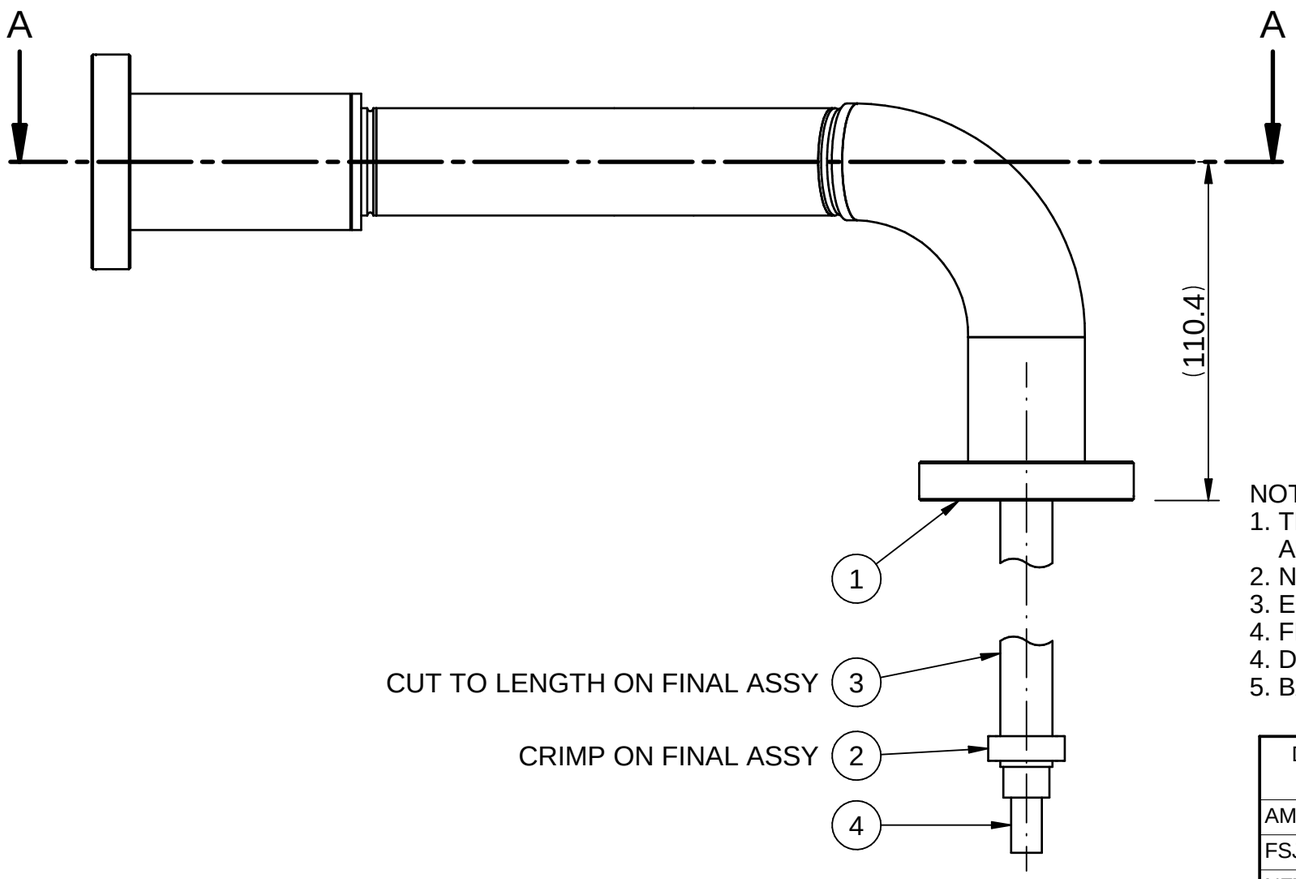

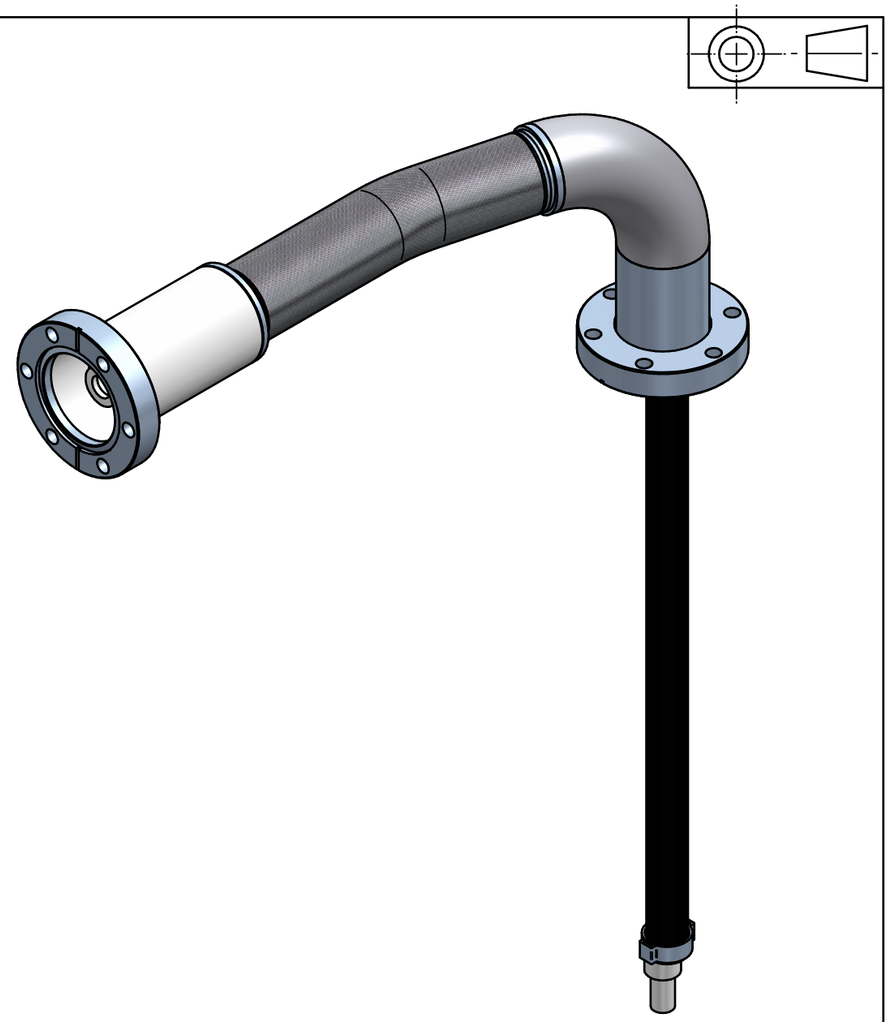

NOTES:-
1. THE OUTER SURFACES ARE A UHV ASSY - CLEAN IN ACCORDANCE WITH APPROPRIATE PROCEDURES.
2. NO SILICONE OR SULPHUR BASED FLUIDS ARE TO BE USED.
3. ENSURE KNIFE EDGES ARE PROTECTED FROM DAMAGE AT ALL TIMES.
4. FLEXI HOSE MUST NOT BE STRETCHED OR BENT. LEAVE AT REST AT ALL TIMES.
4. DO NOT FIT OR CUT EPDM HOSE UNTIL FINAL ASSY.
5. BAG IN A UHV SUITABLE BAG AND BACK FILL WITH GN2 IF BEING STORED

DOCUMENT NUMBER	ITEM NUMBER	QTY	TITLE	COMMENTS
AMM0268	1	1	AIR SHIELDED HOSE-150 LG-RH	
FSJB2002	2	2	CLIP HOSE 15-18MM ZINC PLATED	
NZTZ2007	3*	2	RUBR HOSE EPDM 10ID-10BAR	CUT TO SUIT
VSAS0012	4	2	S/L TUBE ADAPTOR 10.0	
VSUS0016	5	1	S/L UNION 10.0 X 10.0	

REV	DATE	DMR	DESCRIPTION
02	28/04/15	-	FDR ISSUE

THIS DRAWING BELONGS TO FMB OXFORD. THIS DRAWING HAS BEEN ISSUED ON CONDITION THAT IT IS NOT COPIED,REPRINTED OR DISCLOSED EITHER WHOLLY OR IN PART DETAIL TO A THIRD PARTY WITHOUT PRIOR CONSENT IN WRITING FROM FMB OXFORD,OSNEY MEAD, OXFORD, ENGLAND ©2015

TOLERANCES UNLESS STATED
X ± 0.5mm
X.X ± 0.3mm
X.XX ± 0.1mm
ANGLE ± 0°15'

MATERIAL:

SURFACE FINISH 1.6µm
UNLESS STATED

FINISH: CLEAN

SHEET 1 OF 1

mm UNLESS STATED

DATE 28/04/15

DESCRIPTION
AIR SHIELDED HOSE-150 LG-RH

DRAWN julian.wiatrzyk

STATUS

FMB Oxford

DRAWING NUMBER AMM0267

REV 02

A3 ORIGINAL SIZE DO NOT SCALE

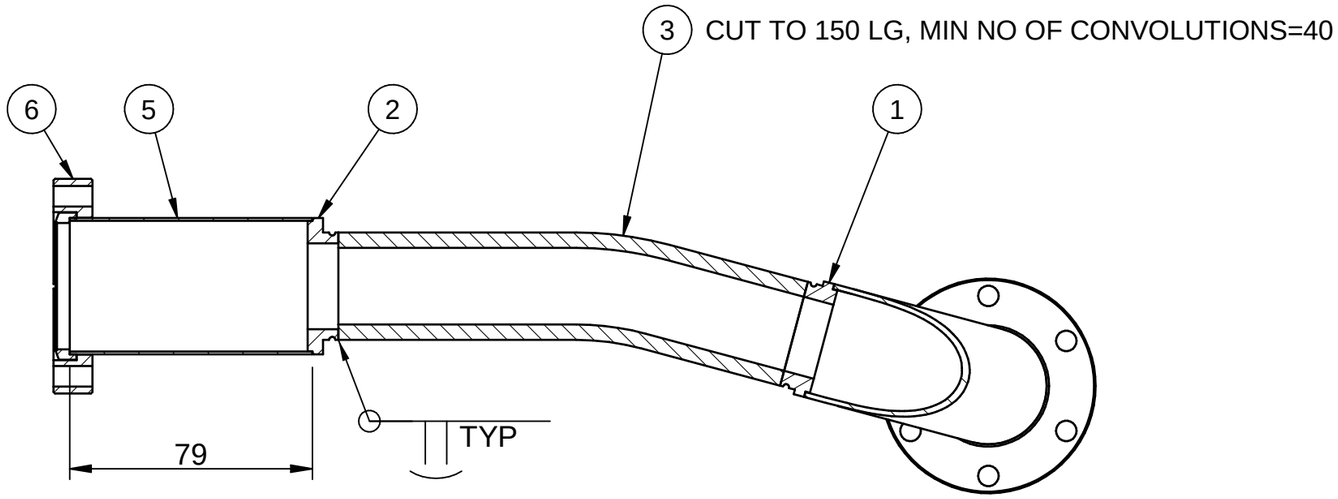

SECTION A-A

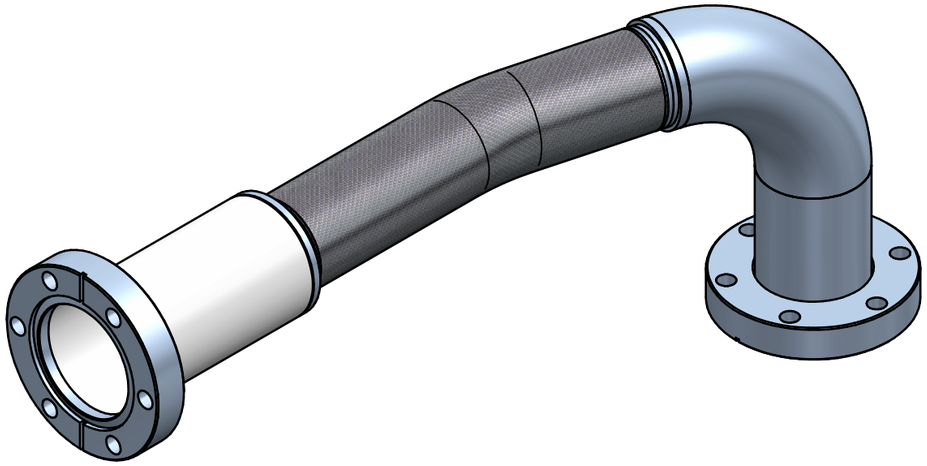

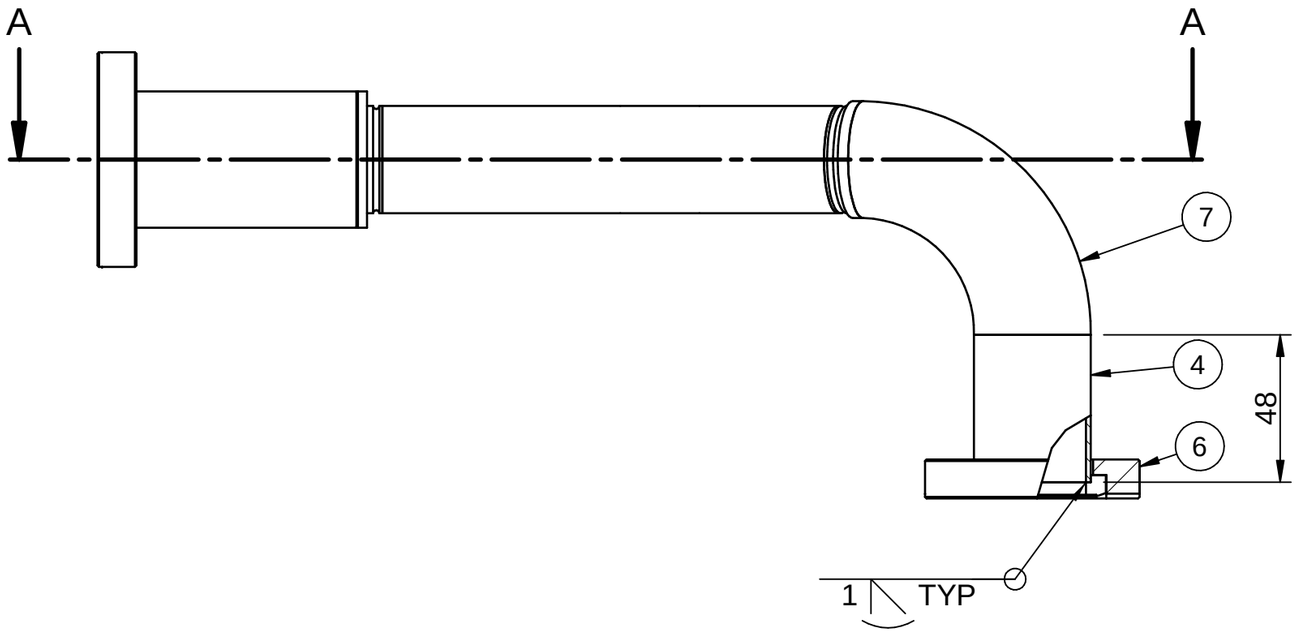

NOTES:-
1. THE OUTER SURFACES ARE A UHV ASSY - CLEAN IN ACCORDANCE WITH APPROPRIATE PROCEDURES.
2. NO SILICONE OR SULPHUR BASED FLUIDS ARE TO BE USED.
3. ENSURE KNIFE EDGES ARE PROTECTED FROM DAMAGE AT ALL TIMES.
4. FLEXI HOSE MUST NOT BE STRETCHED OR BENT. LEAVE AT REST AT ALL TIMES.
5. LEAK TEST TO 1x10-10 mbar.l/s-He
6. BAG IN A UHV SUITABLE BAG AND BACK FILL WITH GN2 IF BEING STORED.

DOCUMENT NUMBER	ITEM NUMBER	QTY	TITLE	COMMENTS
AHM6525	1	1	WELD ADAPTOR 1.5"OD-1"NB FLEX	
AMC1619	2	1	WELD ADAPTOR 1.75"OD-1"NB FLEX	
RSFZ0149	3*	1	ST FLEX CAJON 1 X 36LG	
RSTA0006	4*	1	ST TUBE 01.500 X 0.064	CUT TO SUIT
RSTA0056	5	1	ST TUBE 01.750 X 0.036	CUT TO LENGTH
VCFZ0017	6	2	DN040 CF70 BORED ROTATABLE	
VWEG0016	7	1	BW ELBOW 01.500 SCH05 SHORT	

REV	DATE	DMR	DESCRIPTION
02	28/04/15	-	FDR ISSUE

THIS DRAWING BELONGS TO FMB OXFORD. THIS DRAWING HAS BEEN ISSUED ON CONDITION THAT IT IS NOT COPIED,REPRINTED OR DISCLOSED EITHER WHOLLY OR IN PART DETAIL TO A THIRD PARTY WITHOUT PRIOR CONSENT IN WRITING FROM FMB OXFORD,OSNEY MEAD, OXFORD, ENGLAND ©2015

TOLERANCES UNLESS STATED
X ± 0.5mm
X.X ± 0.3mm
X.XX ± 0.1mm
ANGLE ± 0°15'

MATERIAL:

SURFACE FINISH 1.6µm UNLESS STATED

FINISH: CLEAN

SHEET 1 OF 1

mm UNLESS STATED

DATE 28/04/15

DESCRIPTION
AIR SHIELDED HOSE-150 LG-RH

DRAWN julian.wiatrzyk

STATUS

FMB Oxford

DRAWING NUMBER AMM0268

REV 02

A3 ORIGINAL SIZE DO NOT SCALE

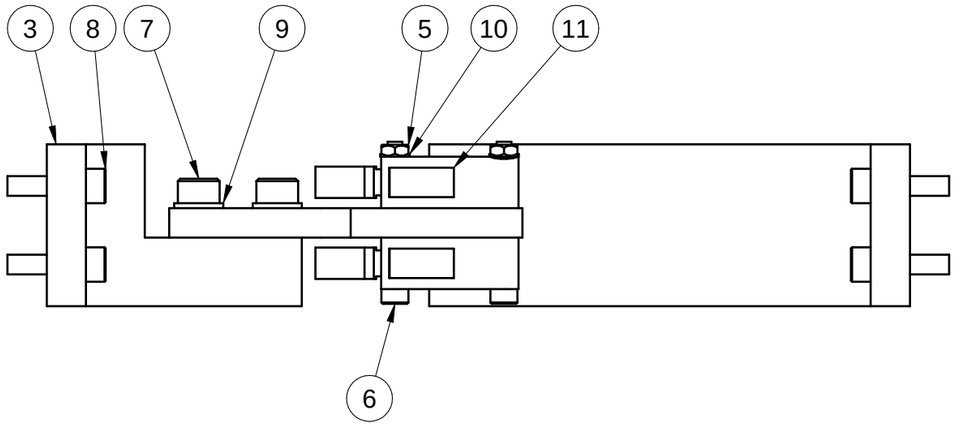

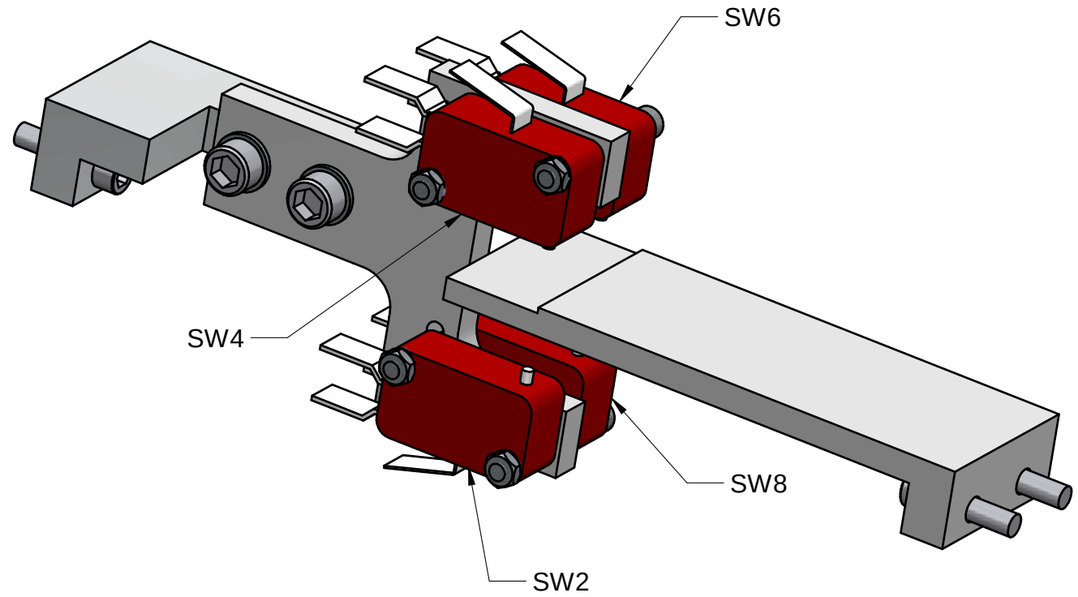

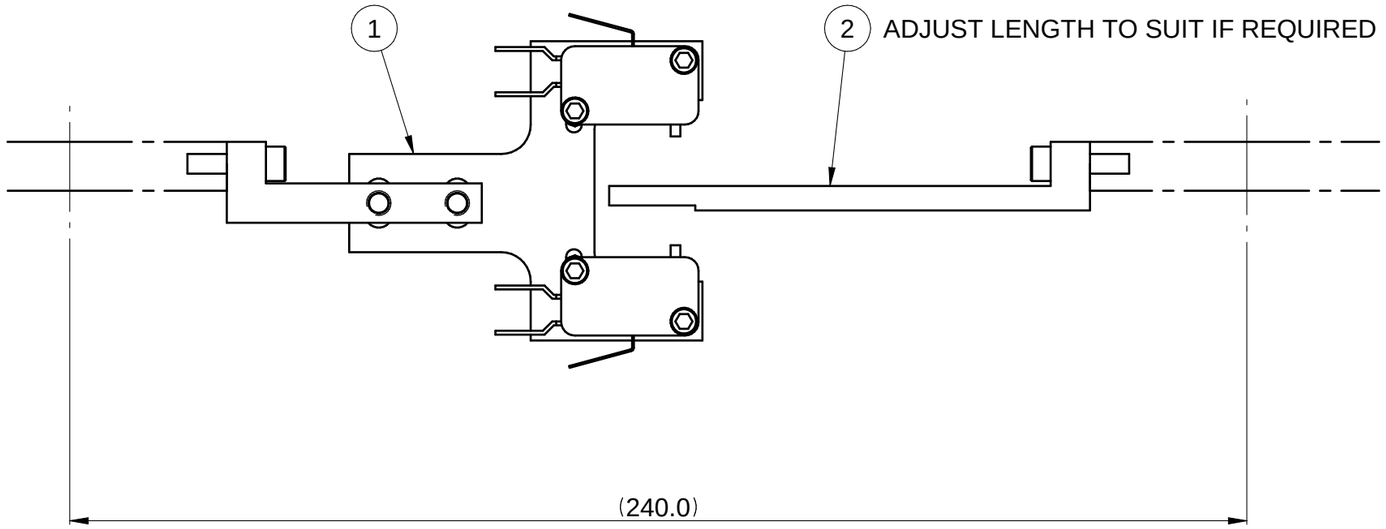

DOCUMENT NUMBER	ITEM NUMBER	QTY	TITLE	COMMENTS
AHM5058	1	1	SWITCH MOUNTING PLATE-400 CTRS	
AMH05501	2	1	TRIGGER-240 CRS MICRO SW ASSY	
AMH05503	3	1	BRACKET	
CJP0088	4*	1	RH RULE MIRROR JACK ROLL LMTS	
FSNB0002	5	4	NUT ST M03.0	
FSSB0032	6	4	SCR ST CAP M03.0 X 030	
FSSB0045	7	2	SCR ST CAP M05.0 X 020 SET	
FSSB0547	8	4	SCR ST CAP M04.0 X 016 SP*	SILVER PLATED
FSWB0004	9	2	WASHER ST M05.0	
FZWZ0007	10	4	M03 WAVY WASHER SS	
MSMI0051	11	4	MICROSWITCH V3 BUTTON	

REV	DATE	DMR	DESCRIPTION
02	28/04/15	-	FDR ISSUE

THIS DRAWING BELONGS TO FMB OXFORD. THIS DRAWING HAS BEEN ISSUED ON CONDITION THAT IT IS NOT COPIED,REPRINTED OR DISCLOSED EITHER WHOLLY OR IN PART DETAIL TO A THIRD PARTY WITHOUT PRIOR CONSENT IN WRITING FROM FMB OXFORD,OSNEY MEAD, OXFORD, ENGLAND

TOLERANCES UNLESS STATED
X ± 0.5mm
X.X ± 0.3mm
X.XX ± 0.1mm
ANGLE ± 0°15'

MATERIAL:

SURFACE FINISH 1.6µm UNLESS STATED

FINISH: CLEAN

SHEET 1 OF 1

mm UNLESS STATED

DATE 28/04/15

DESCRIPTION
ROLL MICROSW ASSY 240 CTRS

DRAWN julian.wiatrzyk

STATUS

FMB Oxford

DRAWING NUMBER AMP0133

REV 02

Electrical Drawings

S3160 BMM VHCM M1
CONTROLS DRAWING LIST

FULL DOCUMENT LIST

DRAWING NUMBER	DRAWING TITLE	SHEET No.	DESCRIPTION
CMP0254	S3160 VHCM BMM M1 BLK DIAG	1	COVER
		2	IN AIR JACKS + LATERALS + INVAC TCs
CMP0255	S3160 VHCM BMM M1 TC WIRING	1	INVAC TC WIRING
CJP0084	JACK MTR (SER) +LIM+OT+TONIC	1	STD MTR(SERIAL WIRED) +LIMITS +OVERTRAVELS +TONIC ENC
CJP0088	RH RULE MIRROR JACK ROLL LMTS	1	JACK 2 ROTATION LIMITS
		2	JACK 3 ROTATION LIMITS

REFERENCED DRAWINGS

ASSEMBLY	DRAWING NUMBER	DESCRIPTION	ELEC DRG XREF
ASSY1	(AMM0264)	V+HCM SYSTEM ASSY-BMM-NIST	CMP0254 CMP0255
ASSY2	(AAM0044)	DRIVE-EXT TRANS 12W TT+ENC-50:1	CJP0084
ASSY3	(AJM0012)	JACK +- 50-12W TONIC-25:1	CJP0084
ASSY4	(AMP0133)	ROLL MICROSW ASSY 240 CTRS	CJP0088

FEEDTHROUGH DETAILS

ID	FUNCTION	TYPE	PART NO.
FD1	TC FEEDTHROUGH	CF70 9 PIN SUB-D FEEDTHRO	(KVFC0074)

REV	DATE	DESCRIPTION / DMR No	DRN
A	02/07/2014	PDR ISSUE	GRE
B	29/06/2015	FDR ISSUE	GRE

THIS DRAWING BELONGS TO FMB OXFORD LTD AND IS ISSUED ON CONDITION THAT IT IS NOT COPIED, REPRINTED OR DISCLOSED TO A THIRD PARTY WITHOUT PRIOR CONSENT IN WRITING FROM FMB OXFORD Ltd.

DRAWN: GRE Date: 02/07/2014
CHECKED: Date: –
APPROVED: Date: –

FMB OXFORD LTD.,
UNIT 1 FERRY MILLS,
OSNEY MEAD, OXFORD. OX2 0ES.
ENGLAND

FMB Oxford

Title: S3160 VHCM BMM M1 BLK DIAG
Size: A3 CMP0254 Rev: B
Sheet: 1 of 2

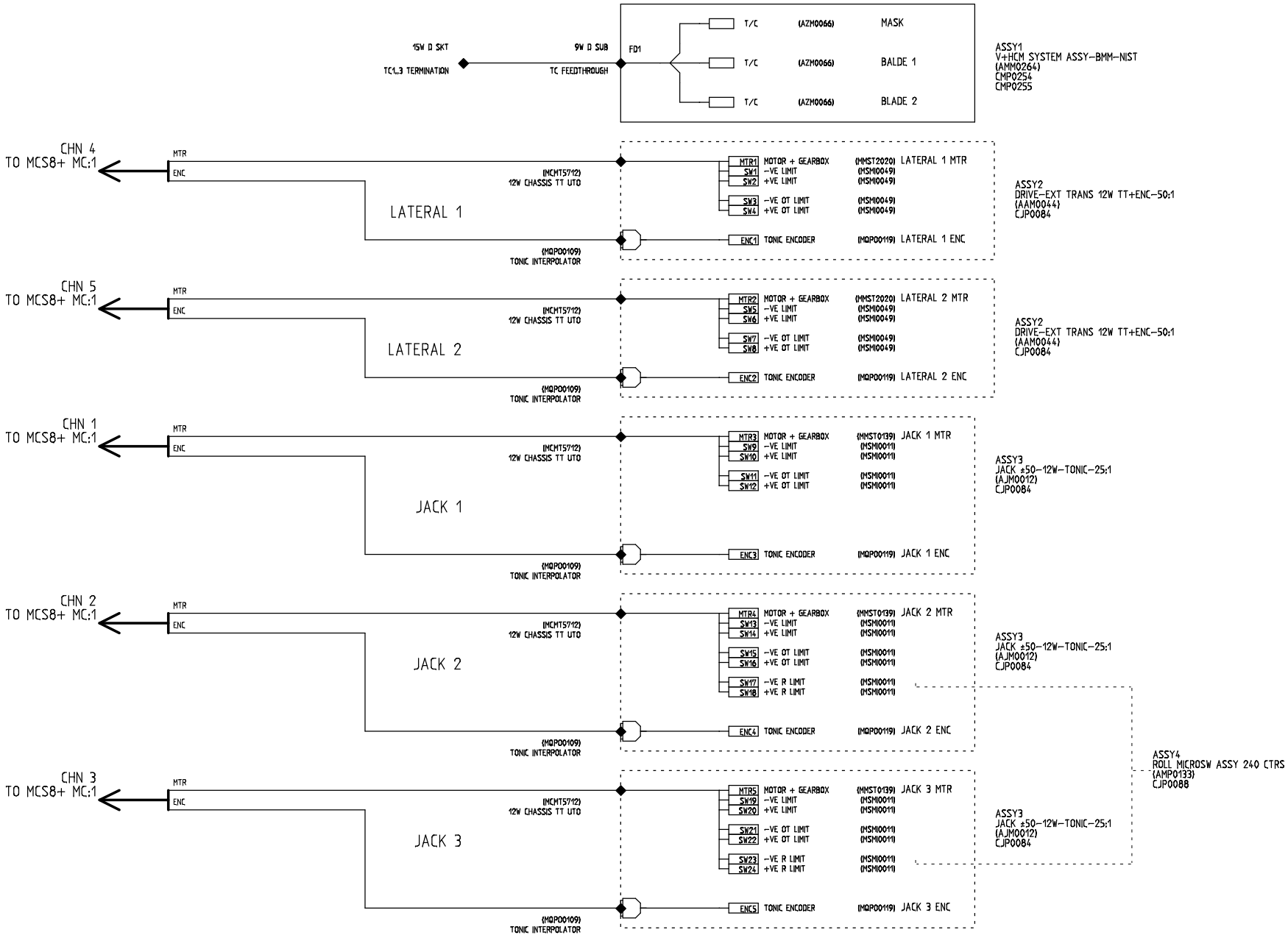

REV	DATE	DESCRIPTION / DNR No	DRN
A	02/07/2014	PDR ISSUE	GRE
B	29/06/2015	FDR ISSUE	GRE

THIS DRAWING BELONGS TO FMB OXFORD LTD AND IS ISSUED ON CONDITION THAT IT IS NOT COPIED, REPRINTED OR DISCLOSED TO A THIRD PARTY WITHOUT PRIOR CONSENT IN WRITING FROM FMB OXFORD Ltd.

DRAWN: GRE Date: 02/07/2014
CHECKED: Date: –
APPROVED: Date: –

FMB OXFORD LTD.,
UNIT 1 FERRY MILLS,
OSNEY MEAD, OXFORD. OX2 0ES.
ENGLAND

FMB Oxford

Title: S3160 VHCM BMM M1 BLK DIAG

Size: A3 CMP0254 Rev: B

Sheet: 2 of 2

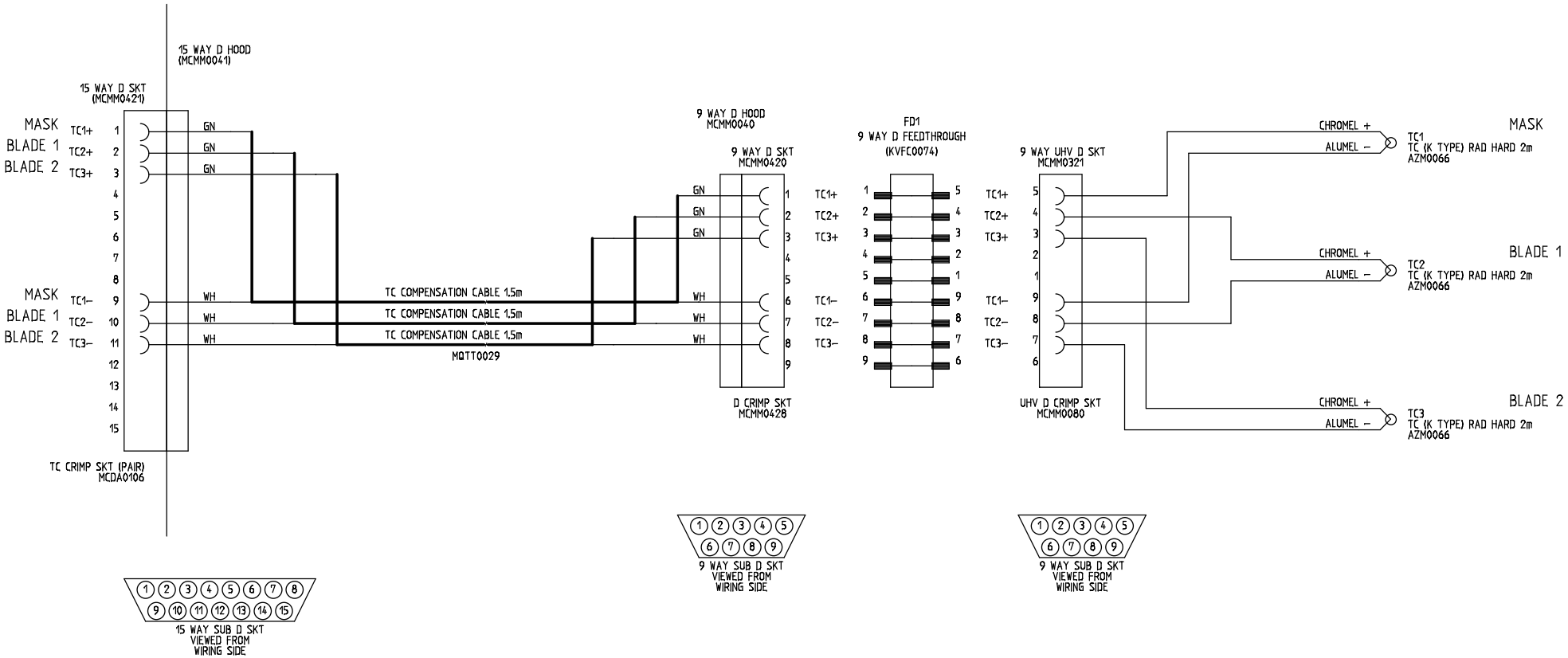

REV	DATE	DESCRIPTION / DNR No	DRN
A	02/07/2014	PDR ISSUE	GRE
B	29/06/2015	FDR ISSUE	GRE

THIS DRAWING BELONGS TO FMB OXFORD LTD AND IS ISSUED ON CONDITION THAT IT IS NOT COPIED, REPRINTED OR DISCLOSED TO A THIRD PARTY WITHOUT PRIOR CONSENT IN WRITING FROM FMB OXFORD Ltd.

WORK

DRAWN: GRE Date: 02/07/2014
CHECKED: Date: –
APPROVED: Date: –

FMB OXFORD LTD.,
UNIT 1 FERRY MILLS,
OSNEY MEAD, OXFORD, OX2 0ES.
ENGLAND

FMB Oxford

Title: S3160 VHCM BMM M1 TC WIRING

Size: A3 CMP0255 Rev: B

Sheet: 1 of 1

Pressure Tests

Hydrostatic Pressure & Flow Rate Testing

FMB Oxford

Sales Order & Description

Part Number & Description:	AMM0264 M1 MIRROR BMM NIST

Tested by:	B.WALTER	Date	**10-Nov-16**	Serial No	**W002403**

Box Colour Responsibility Codes	*Engineer*		*Automatic*		*Technician*	

Safety Precautions

Check! That the Test Area is barriered off and as suitable warning signs			Yes
Check ! That the pressure testing circuit is fitted with a Pressure Relief Valve rated at 10% above the test pressure.	**17**	BarG	N/A
Check! That Safety Glasses are being worn.			Yes
Check! That the Pressure Test is being carried out by trained/ competent personel only			Yes
Check! For damaged or worn test equipment, inspect all fittings, valves & gauges before use.			Yes
Check! That the water in the Hydrostatic Test Pump is clean and at Room Temperature			Yes

Pressure Testing

Water Circuit Name	Cooling Mask

Specification (Test Pressure = 1.5 x Operating Pressure)					
Test Pressure	**15**	Bar Gauge (BarG)	Operating Pressure	**10**	Bar Gauge (BarG)

NOTE: Remove all air/ gas in the circuit by bleeding the circuit with water through a bleed valve located at the highest point at the end of the circuit before pressure testing	N/A

Pressure Test					
Slowly increase pressure to 50% of Test Pressure	**7.5**	BarG	Actual Pressure	7	BarG
NOTE: *WARNING. If signs of yielding or failure of the system are observed, pressure should be slowly decreased to zero.*					
Hold 50% Pressure for 5 minutes.	5	Minutes	Pressure Drop	4.5	BarG
After 50% of the test pressure is reached, the system pressure should be increased in 10% increments (60, 70, 80, 90, and 100%) to specified Test Pressure.					
10% of Test Pressure =	**1.5**	BarG			
At each pressure level, the manual isolation valve shall be closed and the pressure held until the test gauge stabilises.					
Hold at the Full Test Pressure for 15 minutes.	15	BarG	Pressure Drop	0.5	BarG
Reduce to 10% of the Test Pressure and visually inspect for leaks					
10% of Test Pressure	**1.5**	BarG	No Leaks	No	

Flow Rate Testing

Flow Rate Litres/ min		Maximum Pressure BarG		Max pressure drop to be less than			BarG per circuit
Inlet Pressure		BarG	Flow Rate l/m		Outlet Pressure		BarG

Technician Signature:	B.WALTER	Date:	10/11/2016

Hydrostatic Pressure & Flow Rate Testing

FMB Oxford

Sales Order & Description

Part Number & Description:	AMM0264 M1 MIRROR BMM NIST

Tested by:	B.WALTER	Date	**10-Nov-16**	Serial No	**W002403**

Box Colour Responsibility Codes	*Engineer*		*Automatic*		*Technician*	

Safety Precautions

Check! That the Test Area is barriered off and as suitable warning signs			Yes
Check ! That the pressure testing circuit is fitted with a Pressure Relief Valve rated at 10% above the test pressure.	**17**	BarG	N/A
Check! That Safety Glasses are being worn.			Yes
Check! That the Pressure Test is being carried out by trained/ competent personel only			Yes
Check! For damaged or worn test equipment, inspect all fittings, valves & gauges before use.			Yes
Check! That the water in the Hydrostatic Test Pump is clean and at Room Temperature			Yes

Pressure Testing

Water Circuit Name	Optic Circuit

Specification (Test Pressure = 1.5 x Operating Pressure)					
Test Pressure	**15**	Bar Gauge (BarG)	Operating Pressure	**10**	Bar Gauge (BarG)

NOTE: Remove all air/ gas in the circuit by bleeding the circuit with water through a bleed valve located at the highest point at the end of the circuit before pressure testing	N/A

Pressure Test					
Slowly increase pressure to 50% of Test Pressure	**7.5**	BarG	Actual Pressure	7	BarG
NOTE: *WARNING. If signs of yielding or failure of the system are observed, pressure should be slowly decreased to zero.*					
Hold 50% Pressure for 5 minutes.	5	Minutes	Pressure Drop	4.5	BarG
After 50% of the test pressure is reached, the system pressure should be increased in 10% increments (60, 70, 80, 90, and 100%) to specified Test Pressure.					
10% of Test Pressure =	**1.5**	BarG			
At each pressure level, the manual isolation valve shall be closed and the pressure held until the test gauge stabilises.					
Hold at the Full Test Pressure for 15 minutes.	15	BarG	Pressure Drop	0.5	BarG
Reduce to 10% of the Test Pressure and visually inspect for leaks					
10% of Test Pressure	**1.5**	BarG	No Leaks	No	

Flow Rate Testing

Flow Rate Litres/ min		Maximum Pressure BarG		Max pressure drop to be less than			BarG per circuit
Inlet Pressure		BarG	Flow Rate l/m		Outlet Pressure		BarG

Technician Signature:	B.WALTER	Date:	10/11/2016