REVISION HISTORY					
REV	DESCRIPTION	DATE	DESIGNER	CHECKED BY	ENGINEER
A	RELEASE PER ECO 004501	11/2016	J TUOZZOLO	CA/CS	M BREITFELLER
B	REVISED PER ECO-005061	5/2017	R GAMBELLA	CA/ML	M BREITFELLER

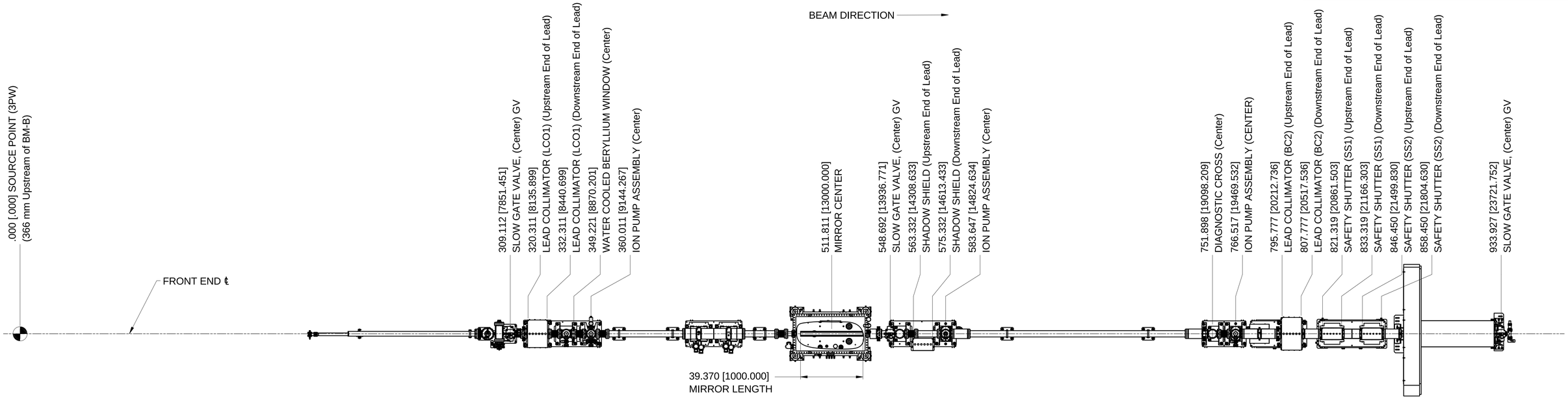

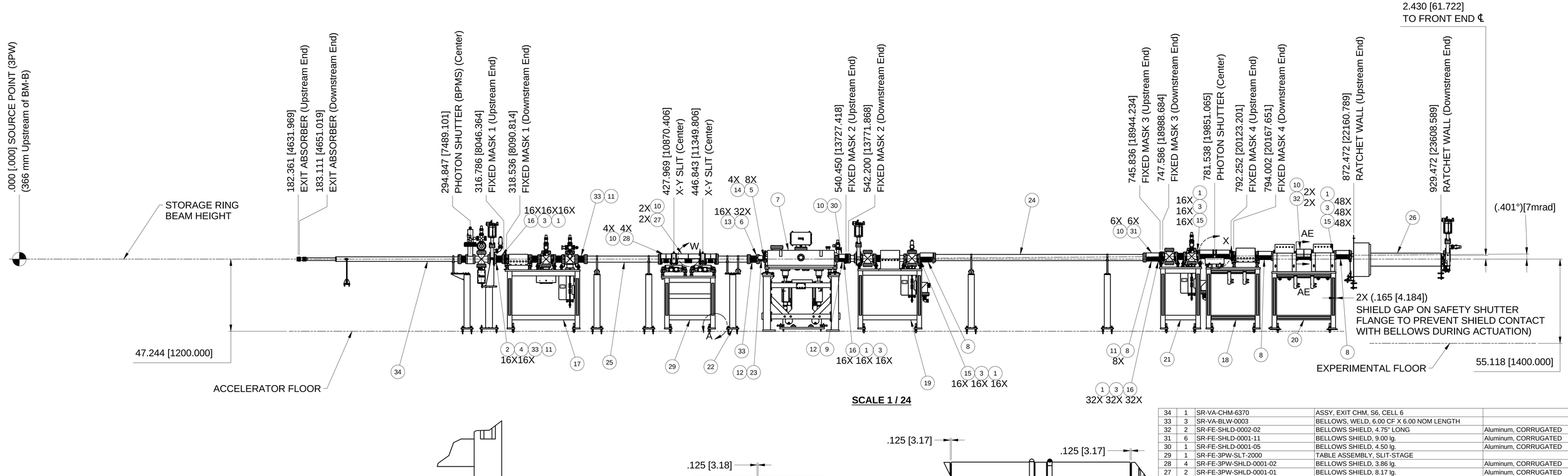

SCALE 1 / 24

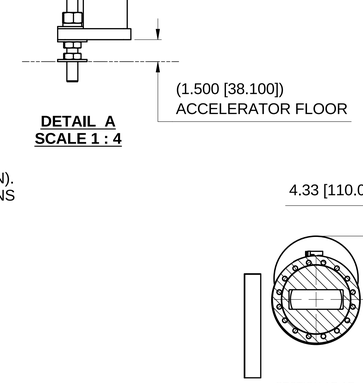

DETAIL A
SCALE 1 : 4

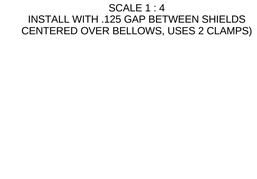

DETAIL W
4X
SCALE 1 : 4
INSTALL WITH .125 GAP BETWEEN SHIELDS
CENTERED OVER BELLOWS, USES 2 CLAMPS)

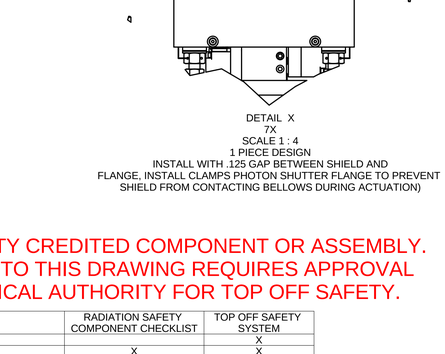

DETAIL X
7X
SCALE 1 : 4
1 PIECE DESIGN
INSTALL WITH .125 GAP BETWEEN SHIELD AND
FLANGE, INSTALL CLAMPS PHOTON SHUTTER FLANGE TO PREVENT
SHIELD FROM CONTACTING BELLOWS DURING ACTUATION)

SECTION AE-AE
SCALE 1 : 4

NOTES:

1. COMPONENTS LAYOUT AS PER RSI (LT-C-ASD-RSI-002 VERSION 3).
2. ALL ORDINATE DIMENSIONS ARE FROM SOURCE POINT (3PW).
3. SEE SHEET 4 FOR TABLE SURVEY AND ALIGNMENT DIMENSIONS.
4. SEE SHEET 3 FOR COMPONENT HEIGHTS AND ALIGNMENT DIMENSIONS.
5. RCO POSITION TOLERANCE OF ±.020 [.500] IN X, Y AND Z DIRECTION (BEAM DIRECTION). ALL OTHER COMPONENT POSITION TOLERANCE OF ± .008 [200] IN X AND Y DIRECTIONS AND +/-.020 [.500] IN Z DIRECTION.
6. REFERENCE WATER FLOW DIAGRAM SR-FE-3PW-UT-8000.
7. REFERENCE AIR SCHEMATIC SR-FE-3PW-UT-7001.
8. FOR SURVEY PURPOSES, USE FIXED MASK 1 TO ESTABLISH PRACTICAL FRAME.
9. REFERENCE RAY TRACE DRAWING SR-FE-3PW-8001.
10. BAKE OUT IAW NSLS II VACUUM SYSTEMS BAKE OUT PS-C-ASD-PRC-105.
    MAX BAKEOUT TEMPERATURE 120˚ C FOR MIRROR CHAMBER AND INTERNAL COMPONENTS
11. INSTALL ALL SAFETY WIRE AFTER FINAL ALIGNMENT.

TOP OFF SAFETY CREDITED COMPONENT OR ASSEMBLY.
ANY CHANGES TO THIS DRAWING REQUIRES APPROVAL
OF THE TECHNICAL AUTHORITY FOR TOP OFF SAFETY.

B

COMPONENT	RADIATION SAFETY COMPONENT CHECKLIST	TOP OFF SAFETY SYSTEM
EXIT ABSORBER		X
FIXED MASK 1	X	X
LEAD COLLIMATOR 1	X	
FIXED MASK 2	X	
SHADOW SHIELD	X	
FIXED MASK 3	X	
FIXED MASK 4	X	
LEAD COLLIMATOR 2	X	
SAFETY SHUTTER 1	X	
SAFETY SHUTTER 2	X	
RATCHET WALL COLLIMATOR	X	

ITEM	QTY	PART NUMBER	DESCRIPTION	MATERIAL
34	1	SR-VA-CHM-6370	ASSY, EXIT CHM, S6, CELL 6	
33	3	SR-VA-BLW-0003	BELLOWS, WELD, 6.00 CF X 6.00 NOM LENGTH	
32	2	SR-FE-SHLD-0002-02	BELLOWS SHIELD, 4.75" LONG	Aluminum, CORRUGATED
31	6	SR-FE-SHLD-0001-11	BELLOWS SHIELD, 9.00 lg.	Aluminum, CORRUGATED
30	1	SR-FE-SHLD-0001-05	BELLOWS SHIELD, 4.50 lg.	Aluminum, CORRUGATED
29	1	SR-FE-3PW-SLT-2000	TABLE ASSEMBLY, SLIT-STAGE	
28	4	SR-FE-3PW-SHLD-0001-02	BELLOWS SHIELD, 3.86 lg.	Aluminum, CORRUGATED
27	2	SR-FE-3PW-SHLD-0001-01	BELLOWS SHIELD, 8.17 lg.	Aluminum, CORRUGATED
26	1	SR-FE-3PW-RCO-8000	RATCHET WALL COLLIMATOR, BMM	
25	1	SR-FE-3PW-8650	ASSY, DRIFT PIPE	
24	1	SR-FE-3PW-8610	ASSY, DRIFT PIPE	
23	1	SR-FE-3PW-8602	WELDMENT, DRIFT PIPE	
22	1	SR-FE-3PW-8600	ASSY, DRIFT PIPE	
21	1	SR-FE-3PW-8031	TABLE ASSY, DIAGNOSTIC CROSS	
20	1	SR-FE-3PW-8030	TABLE ASSY, SAFETY SHUTTER	
19	1	SR-FE-3PW-8015	TABLE ASSY, SHADOW SHIELD	
18	1	SR-FE-3PW-8013	TABLE ASSY, FM4, LCO2, PHOTON SHUTTER	
17	1	SR-FE-3PW-8004	TABLE ASSY, FM1, LCO1, Be WINDOW	
16	64	PI-SCR-0110	STUD, 5/16" - 24 X 2.00 LG, ST ST, SILVER PL	STAINLESS STEEL TYPE 18-8
15	80	PI-ROD-0033	ROD, SST, .312-24 X 2.50, SILVER PL	SST, SILVER PL
14	8	PI-NUT-0051	PLATE, NUT, 4.50 CF	STAINLESS STEEL
13	24	PI-NUT-0018	PLATE NUT, 6.00 CF	STAINLESS STEEL
12	2	PI-GSKT-0025	GASKET, 4-1/2 O.D. FLANGE	Copper
11	10	PI-GSKT-0006	GASKET, COPPER, 4.01 ID (6.00 CF)	COPPER, OFHC
10	15	PI-CLMP-0056	CLAMP, HOSE, WORM DRIVE, S.S, 4.125" - 7"	STAINLESS STEEL TYPE 316L
9	1	PI-BLW-0091	BELLOWS, WELDED, 4-1/2" CF X 6" CF X 6.0" LG	
8	4	PI-BLW-0071	BELLOWS, EDGE WELDED, 6.00" CF FLANGE	
7	1	PD-BMM-MIR-1001	M1 MIRROR, FRONT END	
6	32	IFI 115 - 5/16 - 24 - 2	Flange 12-Point Screw	SST, SILVER PL
5	16	IFI 115 - 1/4 - 28 - 1 3/4	Flange 12-Point Screw	SST, SILVER PL
4	16	ANSI B18.22M - 8 N	Metric Plain Washers	SST
3	224	ANSI B18.22.1 - 5/16 - narrow - Type B	Plain Washer (Inch)Type A and B	SST
2	16	ANSI B18.2.3.1M - M8 x 1.25 x 35	Metric Hex Cap Screw	SST, SILVER PL
1	224	ANSI B18.2.2 - 5/16 - 24	Hex Nuts (Inch Series) Hex Nut	SST

PARTS LIST

6-BM BEAMLINE

NEXT ASSY:

PROJECT: PARTNER

UNLESS OTHERWISE SPECIFIED
ALL DIMENSIONS ARE IN INCHES
DIMENSIONS IN BRACKETS [xx.xx] (WHERE PRESENT) ARE MILLIMETERS AND ARE FOR REFERENCE ONLY
INTERPRET DRAWING AS PER ASME Y14.5-1994 OR Y32.2-1975

DIMENSIONAL TOLERANCES: X. ± 0.060, .X ± 0.030, .XX ± 0.015, .XXX ± 0.005
ANGULAR TOLERANCE: ± .5˚
FINISH: 125
BREAK EDGES & SHARP CORNERS 0.005 MIN. TO 0.030 MAX

THIRD ANGLE PROJECTION
SCALE: SEE DWG VIEW

BROOKHAVEN NATIONAL LABORATORY
BROOKHAVEN SCIENCE ASSOCIATES
UPTON, NEW YORK 11973
Exploring Life's Mysteries, Protecting its Future

NSLS II NATIONAL SYNCHROTRON LIGHT SOURCE II

DRAWN BY	J TUOZZOLO	4/6/2015
CHECKED BY	CA/CS	11/2016
VACUUM ENGINEER APPROVAL	C HETZEL	11/2016
ENGINEER APPROVAL	M BREITFELLER	11/2016
SUPERVISOR APPROVAL	S SHARMA	11/2016
ESHD APPROVAL	A ACKERMAN	11/2016
QA APPROVAL	J HAWKES	11/2016

STORAGE RING
FRONT END, 3PW
LAYOUT, BMM BEAMLINE

SHEET NO: E
DRAWING/PART NUMBER: SR-FE-3PW-8000
REVISION: B

WBS# 7.03.05.01
ESH&Q RISK LEVEL: A1
SHEET 1 OF 4

C:\Mech-Eng\LT\SR\FE\3PW\SR-FE-3PW-8000.dwg

RELEASED + EFFECTIVE

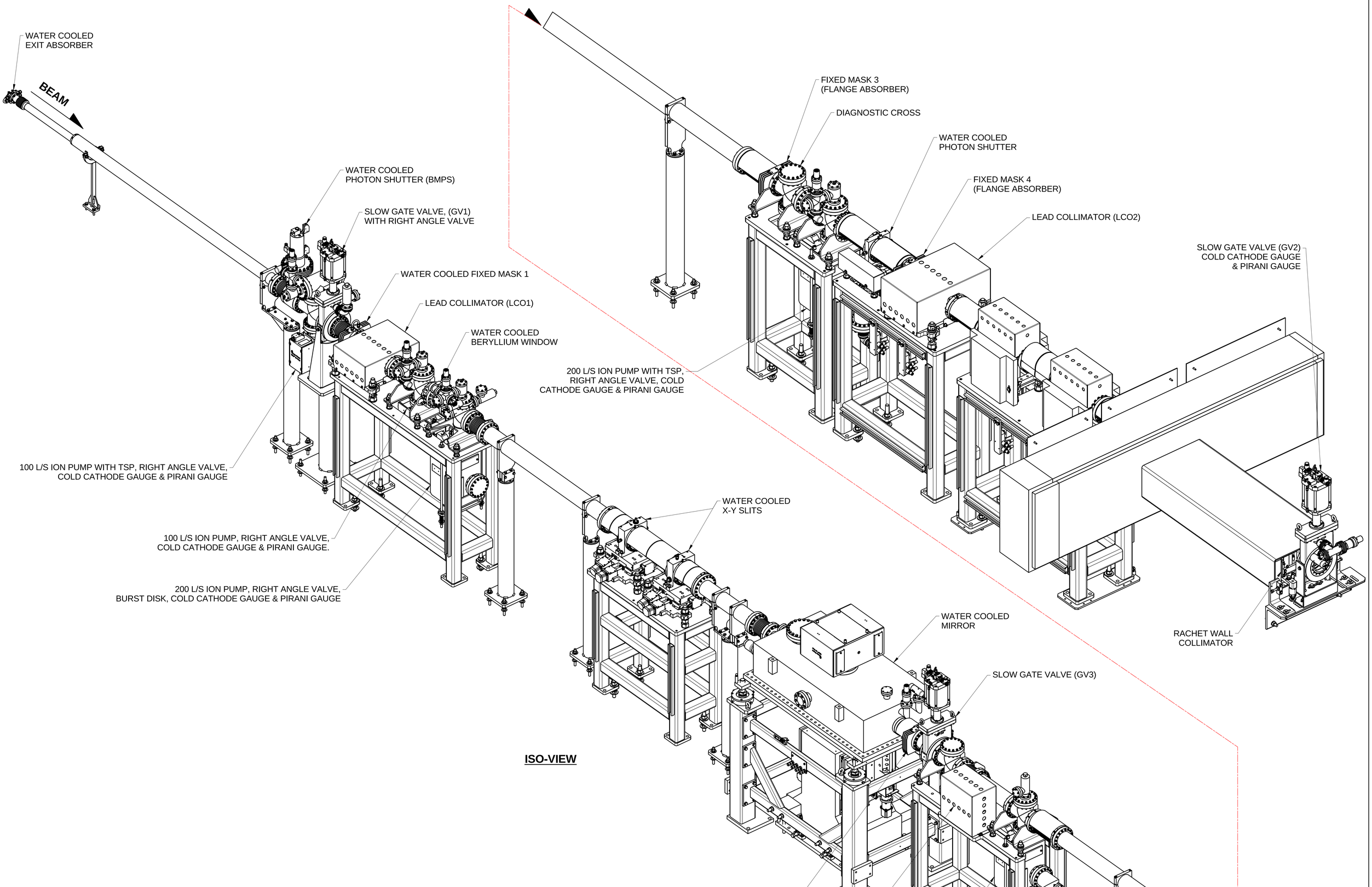

ISO-VIEW

E (SHEET SIZE)	SR-FE-3PW-8000 (DRAWING/PART NUMBER)	B (REVISION)
ESH&Q RISK LEVEL A-1		SHEET 2 OF 4

C:\Mech-Engr\TS\SR\FE\3PW\SR-FE-3PW-8000.dwg

RELEASED + EFFECTIVE

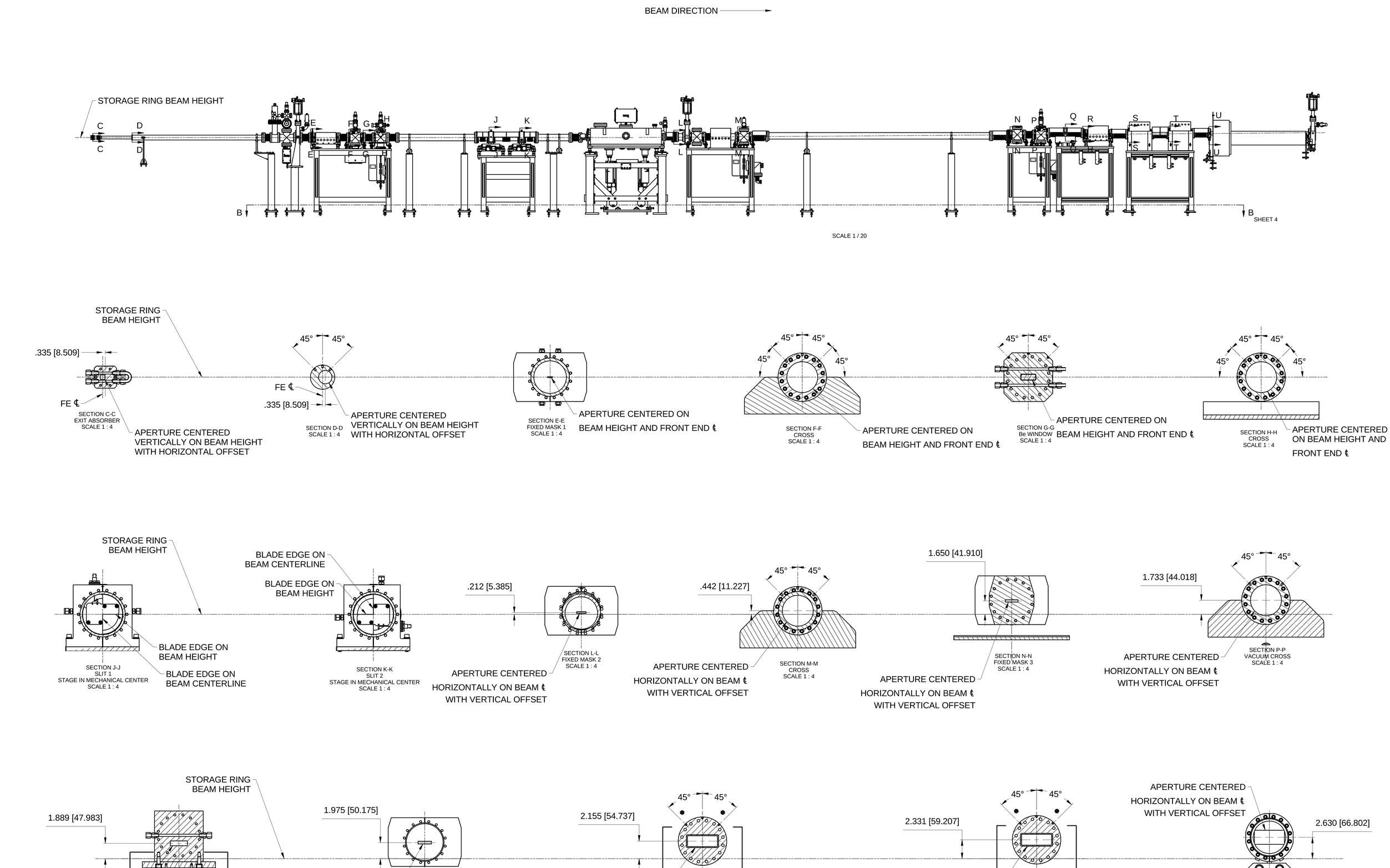

E	SR-FE-3PW-8000	B
SHEET SIZE	DRAWING/PART NUMBER	REVISION
ESH&Q RISK LEVEL A-1	SHEET 3 OF 4	

C:\Mech-Eng\LT\SR\FE\3PW\SR-FE-3PW-8000.idw

RELEASED – EFFECTIVE

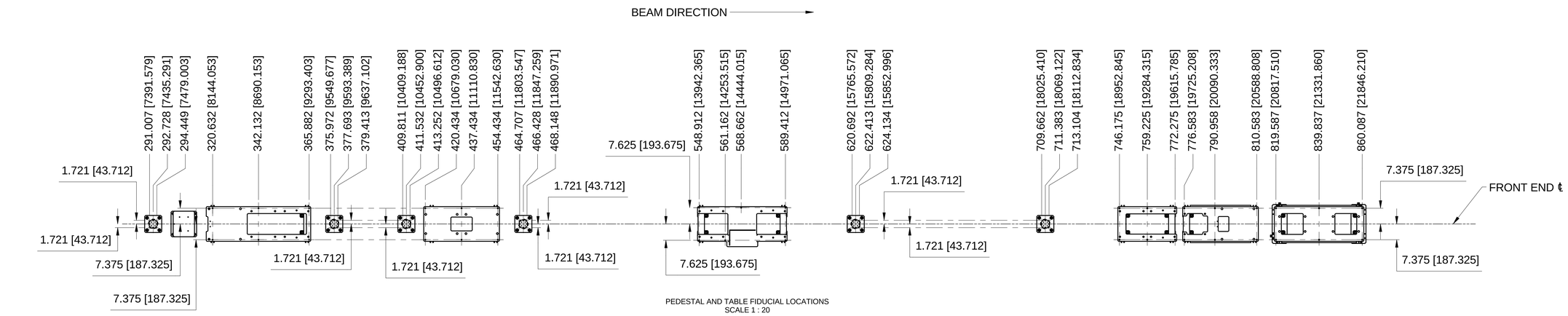

PEDESTAL AND TABLE FIDUCIAL LOCATIONS
SCALE 1 : 20

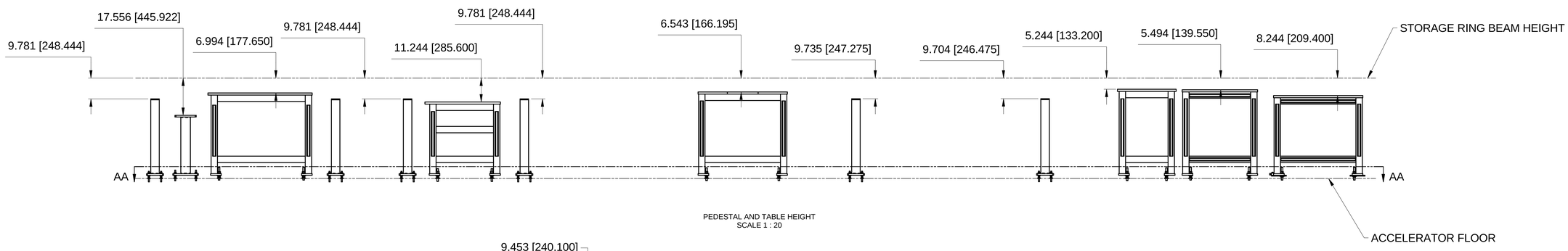

PEDESTAL AND TABLE HEIGHT
SCALE 1 : 20

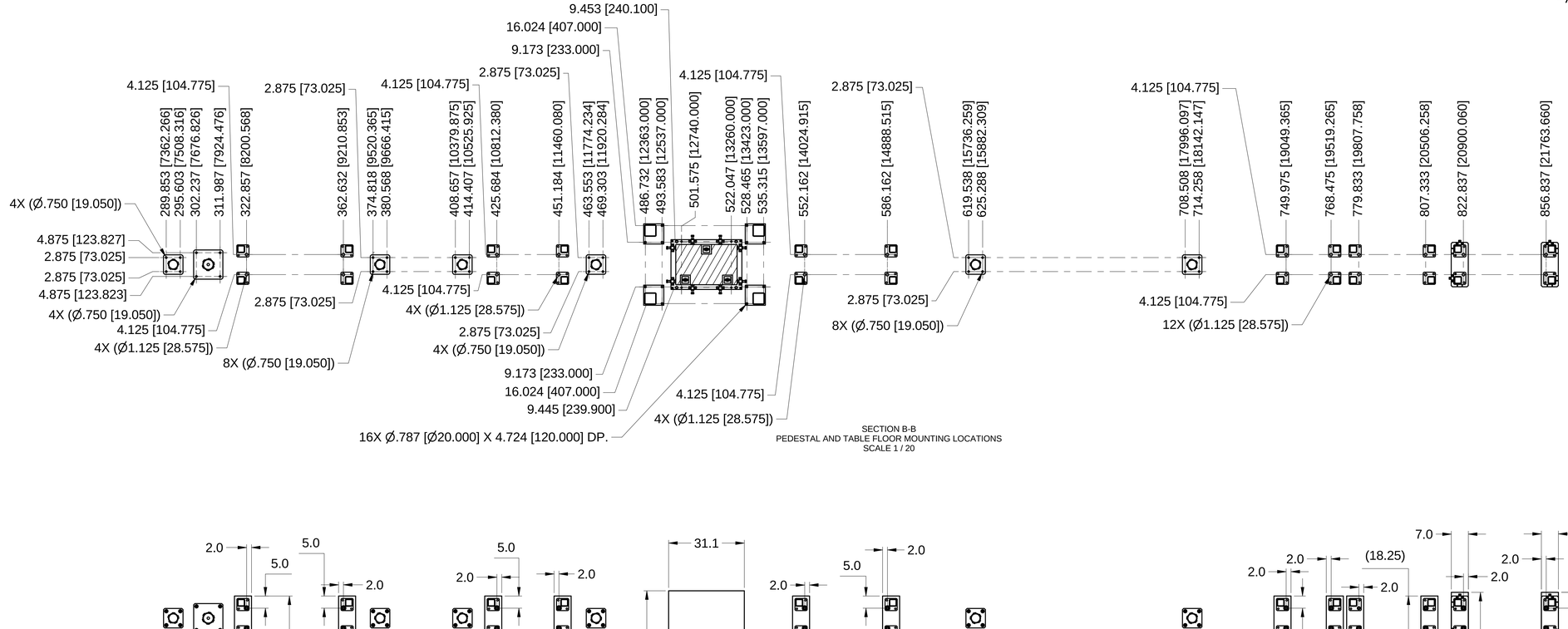

SECTION B-B
PEDESTAL AND TABLE FLOOR MOUNTING LOCATIONS
SCALE 1 / 20

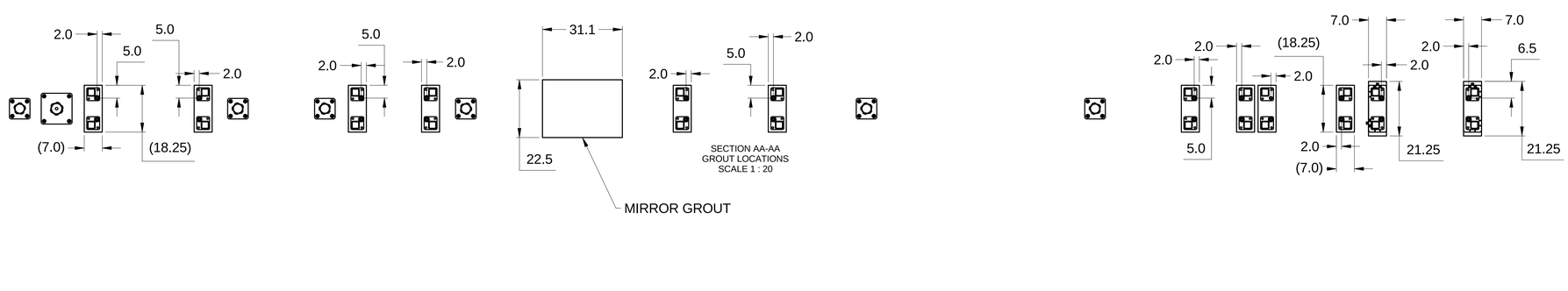

SECTION AA-AA
GROUT LOCATIONS
SCALE 1 : 20

NOTES:

1. FOR Ø1.125 [28.575] HOLES USE "3/4" P/N PI-HDW-0021 ANCHORS.

2. FOR Ø.750 [19.050] HOLES USE "1/2" P/N PI-HDW-0040 ANCHORS.

3. FOR Ø .787 [20.000] HOLES ANCHORS TO BE SUPPLIED BY FMB OXFORD.

3. ALL GROUT PADS 7.0" X 18.25" UNLESS OTHERWISE SHOWN

E	SR-FE-3PW-8000	B
SHEET SIZE	DRAWING/PART NUMBER	REVISION
ESH&Q RISK LEVEL A-1	SHEET 4 OF 4	

C:\Mech-Eng\LTS\SR\FE\3PW\SR-FE-3PW-8000.iiw

RELEASED + EFFECTIVE

REVISION HISTORY					
REV	DESCRIPTION	DATE	DESIGNER	CHECKED BY	ENGINEER
A	RELEASE PER ECO-002883	3/2015	M. JOHANSON	C.AMARITO	L. LIENHARD

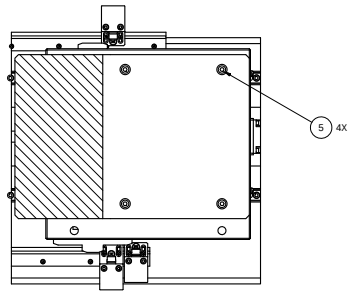

SECTION A-A
SCALE 1 / 4

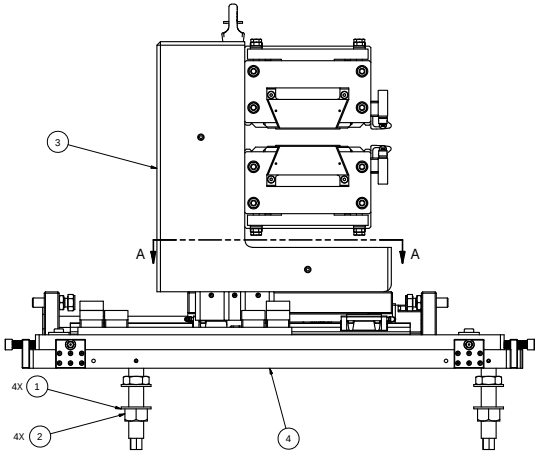

SCALE 1 / 4

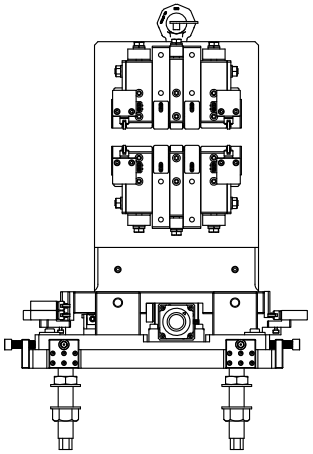

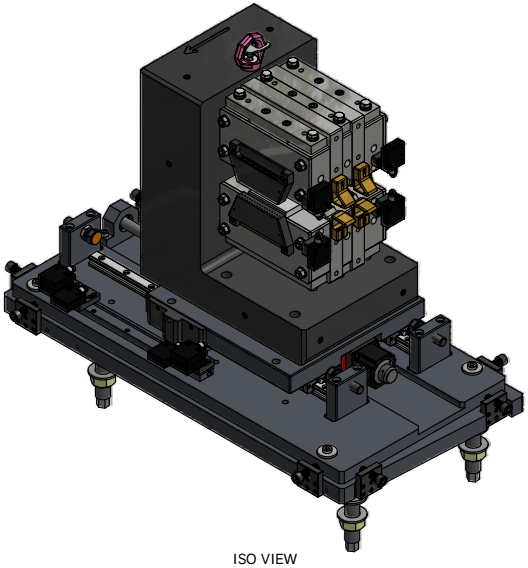

ISO VIEW
SCALE 1 / 4

ITEM	QTY	PART #	DESCRIPTION	MATERIAL
5	4	Unbrako - M8 x 60	Cylinder Head Cap Screw	316 SS
4	1	SR-ID-3PW-2200	ASSY, SLIDE	-
3	1	SR-ID-3PW-2100	ASSY, MAGNET	-
2	4	PI-NUT-0064	NUT, HEX, 1"-14 THREAD	SAE GR 2 STEEL, ZN PLATE
1	4	ANSI B18.22.1 - 1 - narrow - Type A	Plain Washer (Inch)Type A and B	Steel, Mild

Parts List

NOTES:

1. ITEMS 1 & 2 TO BE INSTALLED AT NEXT ASSEMBLY.
2. NOMINAL SLIDE TRAVEL (X): 190mm (7.48")
3. APPROXIMATE WEIGHT OF SYSTEM: 225 kg (495 lbs)

UNLESS OTHERWISE SPECIFIED
ALL DIMENSIONS ARE IN MILLIMETERS
DIMENSIONS IN BRACKETS (ex.ref.) (SHEET PRESENT) ARE SHOWN AND ARE FOR REFERENCE ONLY
INTERPRET DRAWING AS PER ASME Y14.5-1994 OR Y32.3-1975

DIMENSIONAL TOLERANCES
X. ± 1.500
.X ± 0.750
.XX ± 0.400
.XXX ± 0.120

ANGULAR TOLERANCE
± .5°

FINISH
3.2

BREAK EDGES & SHARP CORNERS 0.125 MIN. TO 0.750 MAX.

THIRD ANGLE PROJECTION

SCALE: SEE DWG VIEW

BROOKHAVEN NATIONAL LABORATORY
BROOKHAVEN SCIENCE ASSOCIATES
UPTON, NEW YORK 11973
Exploring Life's Mysteries, Protecting its Future

DRAWN BY	M. JOHANSON	3/11/2015
CHECKED BY	C.AMARITO	3/2015
VACUUM APPROVAL	-	-
ENGINEER APPROVAL	L. LIENHARD	3/2015
SUPERVISOR APPROVAL	T.TANABE	3/2015
ESSH APPROVAL	J. HAWKES	3/2015
QA APPROVAL	A. ACKERMAN	3/2015

NSLSII
NATIONAL SYNCHROTRON LIGHT SOURCE II

STORAGE RING
INSERTION DEVICES, 3PW
ASSEMBLY, 3-POLE WIGGLER

D
SHEET SIZE

SR-ID-3PW-2000
DRAWING/PART NUMBER

A
REVISION

NEXT ASSY: MULTIPLE

PROJECT: NXTGEN

WBS# 6.05.04.07

ESH&Q RISK LEVEL A-2

SHEET 1 OF 1

C:\Mech-Eng\LT\SR\ID\3PW\SR-ID-3PW-2000.idw

RELEASED – EFFECTIVE