NSLS II 4-BM XFM Beam Line Personal Protection System Certification Validation Check List
G. Ganetis 8/14/2017

Beam Line __4-BM_XFM_____

The following check list represents the documents and tasks that summarize the review the evaluator has done for a NSLS II Beam Line Personal Protection System:

Document or Task	**Documents Reviewed**	**Checked**	**Comments**
Beam Line Logic Diagram	LT-EL-BL-EI-PPS-2040-96_REV-A.pdf		
Front End Logic Diagram	LT-EL-BL-EI-PPS-0101-92_REV-F.pdf		
Beam Line Logic Diagram reviewed by PS Radiation Safety Committee (Sub Committee)	logic_4bm_7bm_18id_2017_final.pdf		
Electrical Schematics First Optical Enclosure Hutch B Hutch C Front End –Network/ System Front End-SR 6 I/O Box	 LT-EL-BL-EI-PPS-2040-91_REV-A.pdf LT-EL-BL-EI-PPS-2040-93_REV-A.pdf LT-EL-BL-EI-PPS-2040-94_REV-A.pdf LT-EL-BL-EI-PPS-0101-90 _REV-B.pdf LT-EL-BL-EI-PPS-0101-91_REV-B.pdf LT-EL-SR-EI-PPS-0204-90 _REV-F.pdf		 (A Chain) (B Chain)
Certification Test Procedure with executed check lists.	NSLS-II Beamline 4-BM Radiological Interlock Test Checklist 7.18.17.pdf		
Beam Line Tour & Secure Demonstration			If Requested
Mechanical Inspection reports for Beam line Hutch Doors	4-BM Door Report 6_14_17.pdf		
Design Description for Beam Lines and Front End PPS	PS-C-XFD-SPC-PPS-001		(Copies available upon request)
Maintenance Procedures	PS-C-XFD-PRC-023		(Copies available upon request)
Network Isolation Test Procedure	PS-C-XFD-PRC-022		(Copies available upon request)
PPS Equipment Layout Drawing	LT-EL-BL-EI-HCH-2040_REV-A.pdf		

NSLS II 4-BM XFM Beam Line Personal Protection System Certification Validation Check List
G. Ganetis 8/14/2017

ECNs required during Certification using Small Change Procedure	None		
Deviation Reports on Installed system	None		
PPS PLC Software under Configuration Control 4-BM Chain A PPS Front End P3 Program Stored 4-BM Chain B PPS Front End P3 Program Stored 4-BM Chain A PPS Beamline Program Stored 4-BM Chain B PPS Beamline Program Stored	 LT-EL-BL-EI-PPS-0101-72_REV-G.pdf LT-EL-BL-EI-PPS-0101-82_REV-G.pdf LT-EL-BL-EI-PPS-2040-70_REV-A.pdf LT-EL-BL-EI-PPS-2040-71_REV-A.pdf		This section contains the new system storing the PLC program in the Electrical Design room.

Evaluator _____ _____ Date _____
Print Name Signature

Inspection/Test Record

BROOKHAVEN NATIONAL LABORATORY

Photon Sciences Directorate
National Synchrotron Light Source II

Document Title: **Hutch Door PPS Mechanical Inspection (Rolling Door)**

Beamline: 7 BM

Door Location: 7 BM A **Type:** Left / Right
(circle one)

Reference Names / Nomenclature

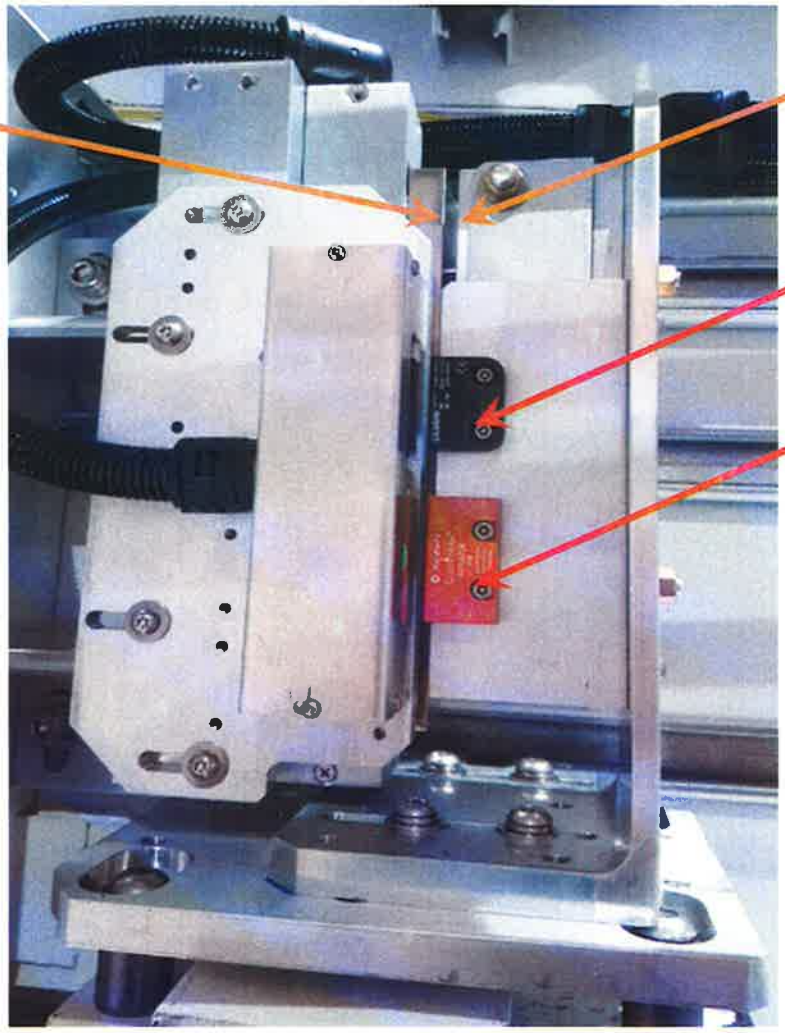

Figure 1. PPS Lock Shown in Closed Position

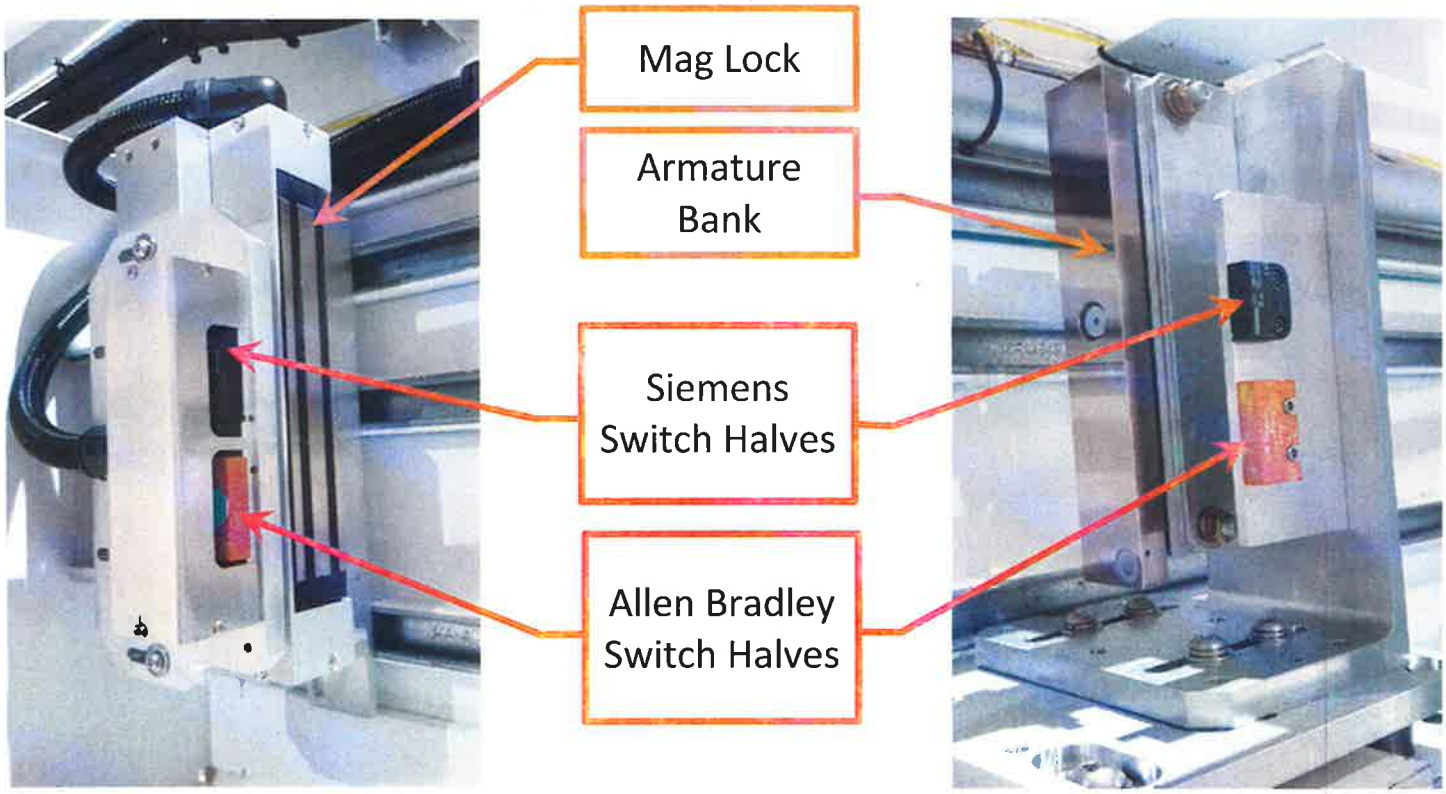

Figure 2. PPS Lock Shown in Open Position

(Left-hand door shown above, right-hand is similar, mirror image)

Op #

1) **Close door and ensure there is contact between mag lock and armature bank**

ID	Inspection Description	Pass / Fail	DR #	Name/Life #	Date
1	Contact between Mag Lock and Armature			Ed Weigand 15372	6-9-17

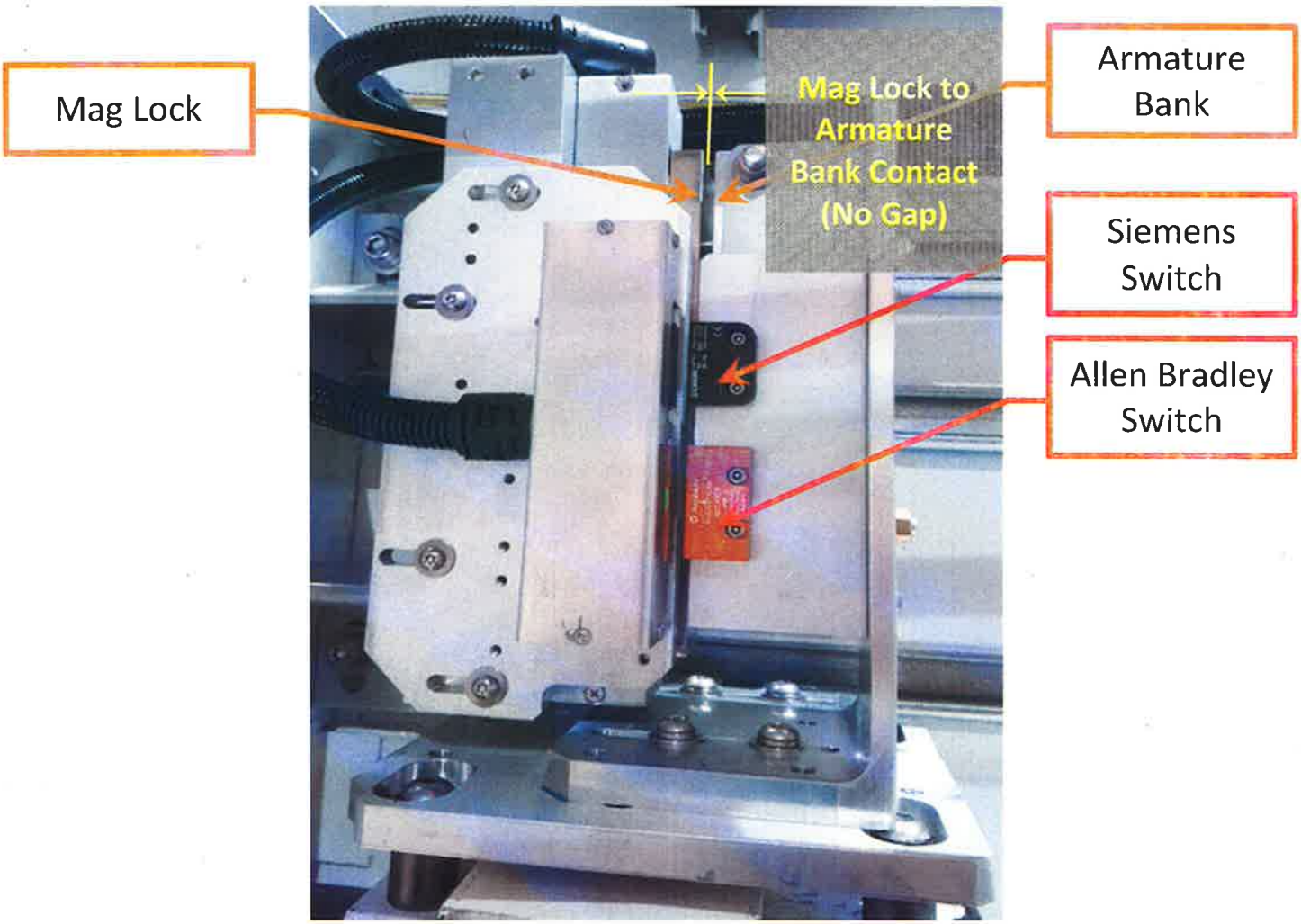

Figure 3. Operation #1: Mag Lock to Armature Gap

2) Use 1/4" precision spacer to set gap between Allen Bradley Switch Halves and Siemens Switch Halves

ID	Inspection Description	Nominal Gap	Gap Tolerance	Pass / Fail	DR #	Name/Life #	Date
2	Gap between Switch Halves	0.250 Ew	+0.0"/ - 0.003"			Ed Weigand 15372	6-9-17

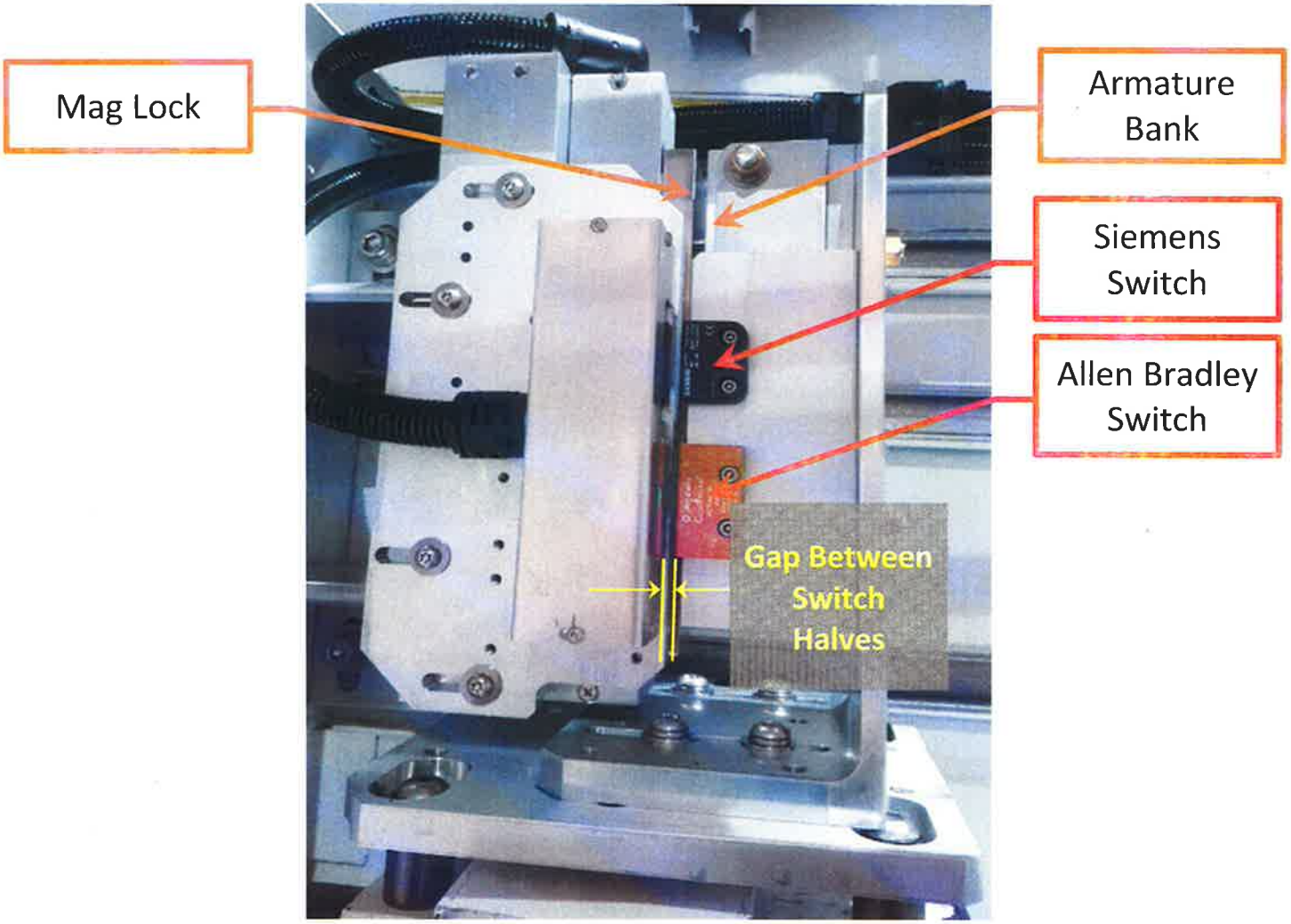

Figure 4. Operation #2: Gap Between Switch Halves

Submitted By: Ed Weigand — *Print Name* — *Signature / Date* 6-9-17

Approvals (ready for certification)

Cognizant Engineer: Christopher Eng — *Approved By (Print Name)* — *Signature / Date* 6-13-17

Inspection/Test Record

BROOKHAVEN NATIONAL LABORATORY

Photon Sciences Directorate
National Synchrotron Light Source II

Document Title: **Hutch Door PPS Mechanical Inspection (Rolling Door)**

Beamline: 7BM

Door Location: 7BM A **Type:** Left / Right
(circle one)

Reference Names / Nomenclature

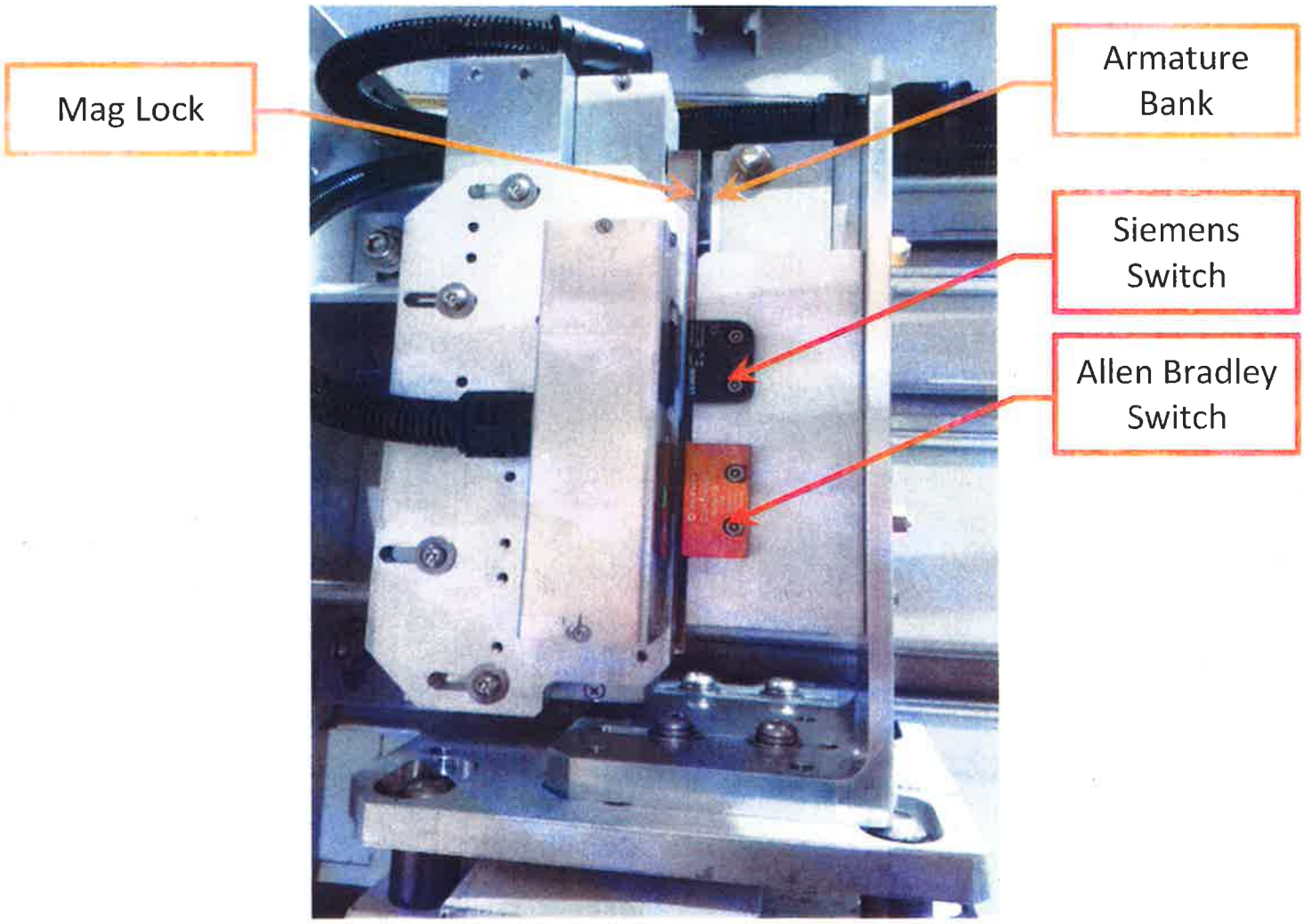

Figure 1. PPS Lock Shown in Closed Position

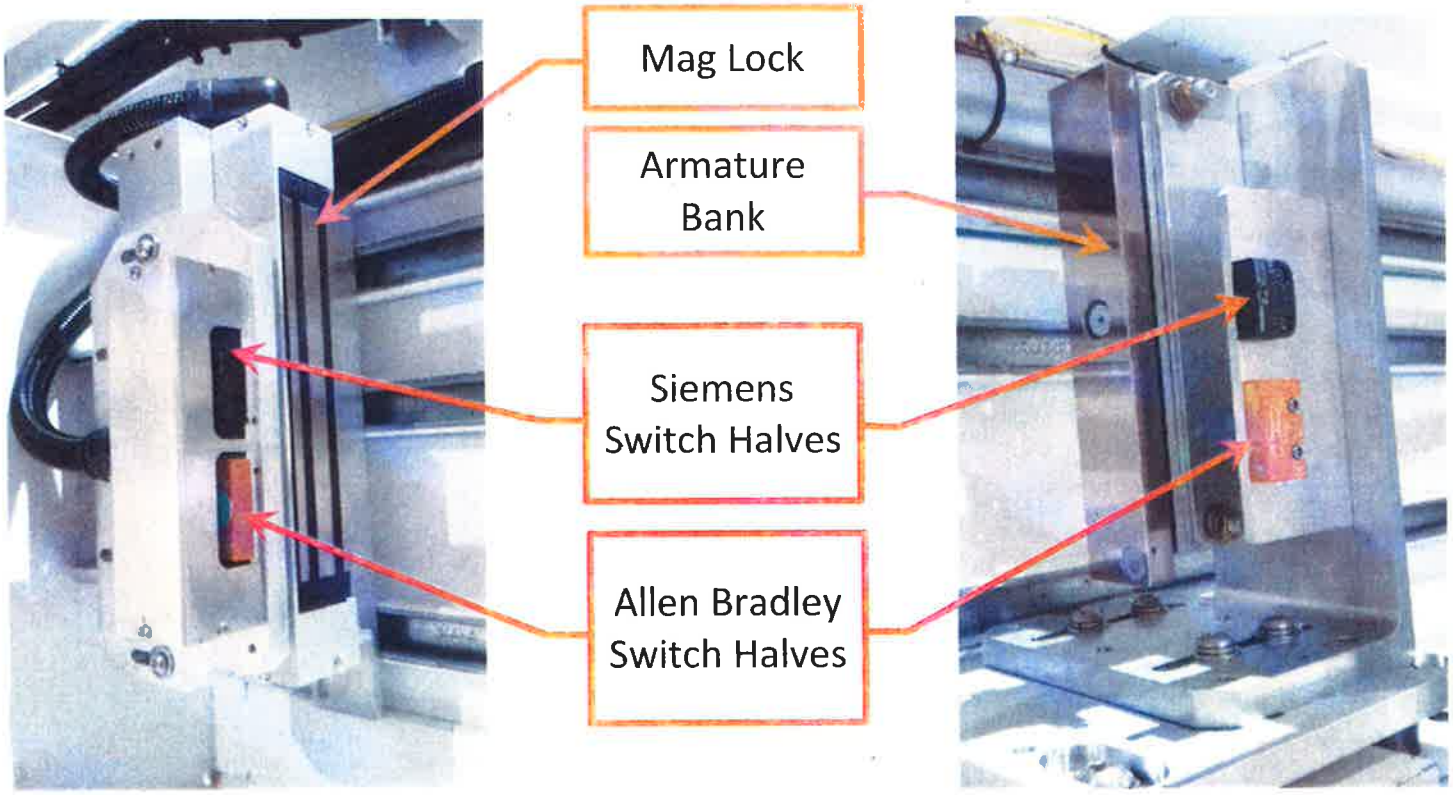

Figure 2. PPS Lock Shown in Open Position

(Left-hand door shown above, right-hand is similar, mirror image)

Op # -

1) **Close door and ensure there is contact between mag lock and armature bank**

ID	Inspection Description	Pass / Fail	DR #	Name/Life #	Date
1	Contact between Mag Lock and Armature			Ed Weigand	6-9-18

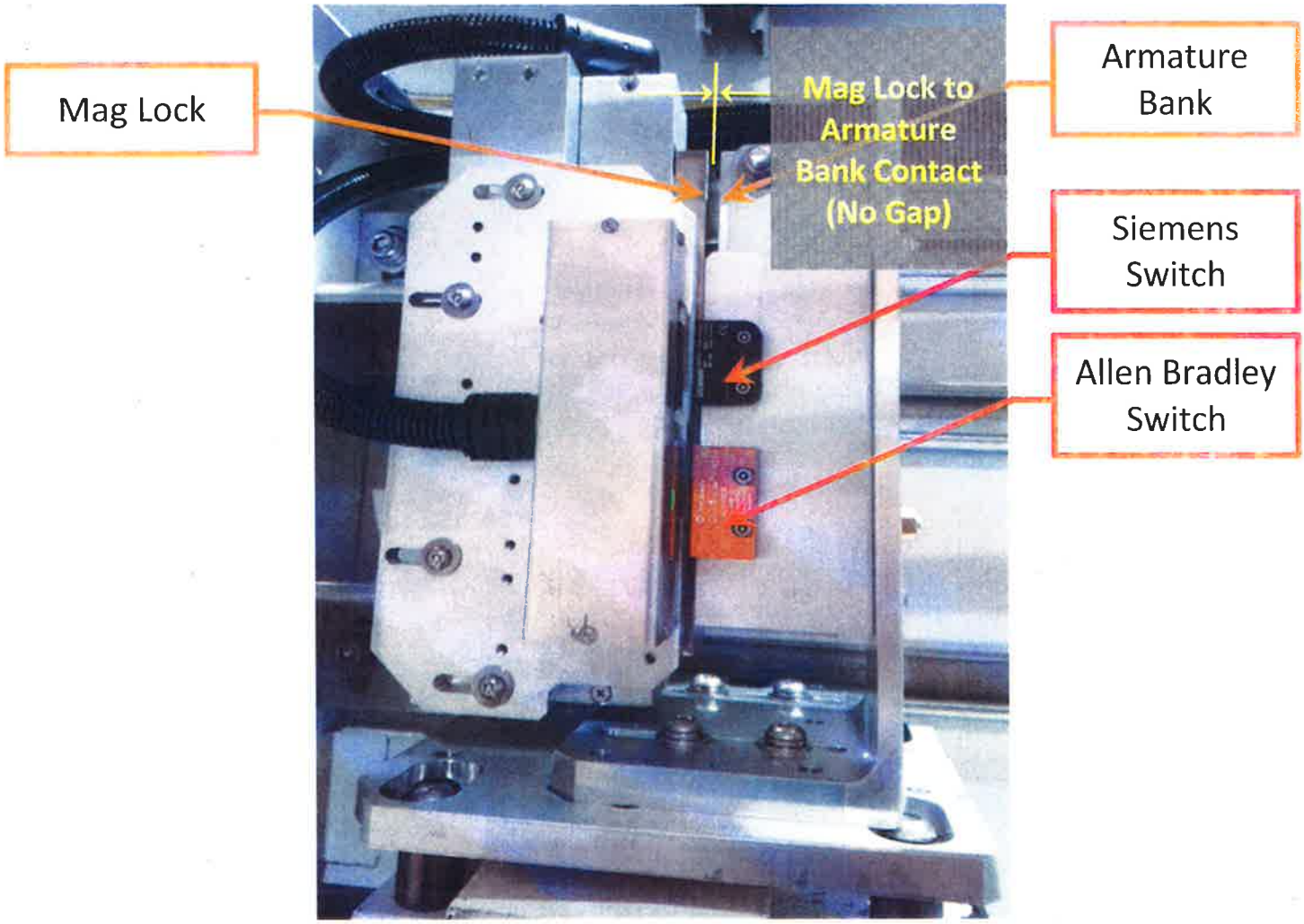

Figure 3. Operation #1: Mag Lock to Armature Gap

2) Use 1/4" precision spacer to set gap between Allen Bradley Switch Halves and Siemens Switch Halves

ID	Inspection Description	Nominal Gap	Gap Tolerance	Pass / Fail	DR #	Name/Life #	Date
2	Gap between Switch Halves	0.2~~00~~ Ew	+0.0"/ - 0.003"			Ed Weigand 15372	6-9-17

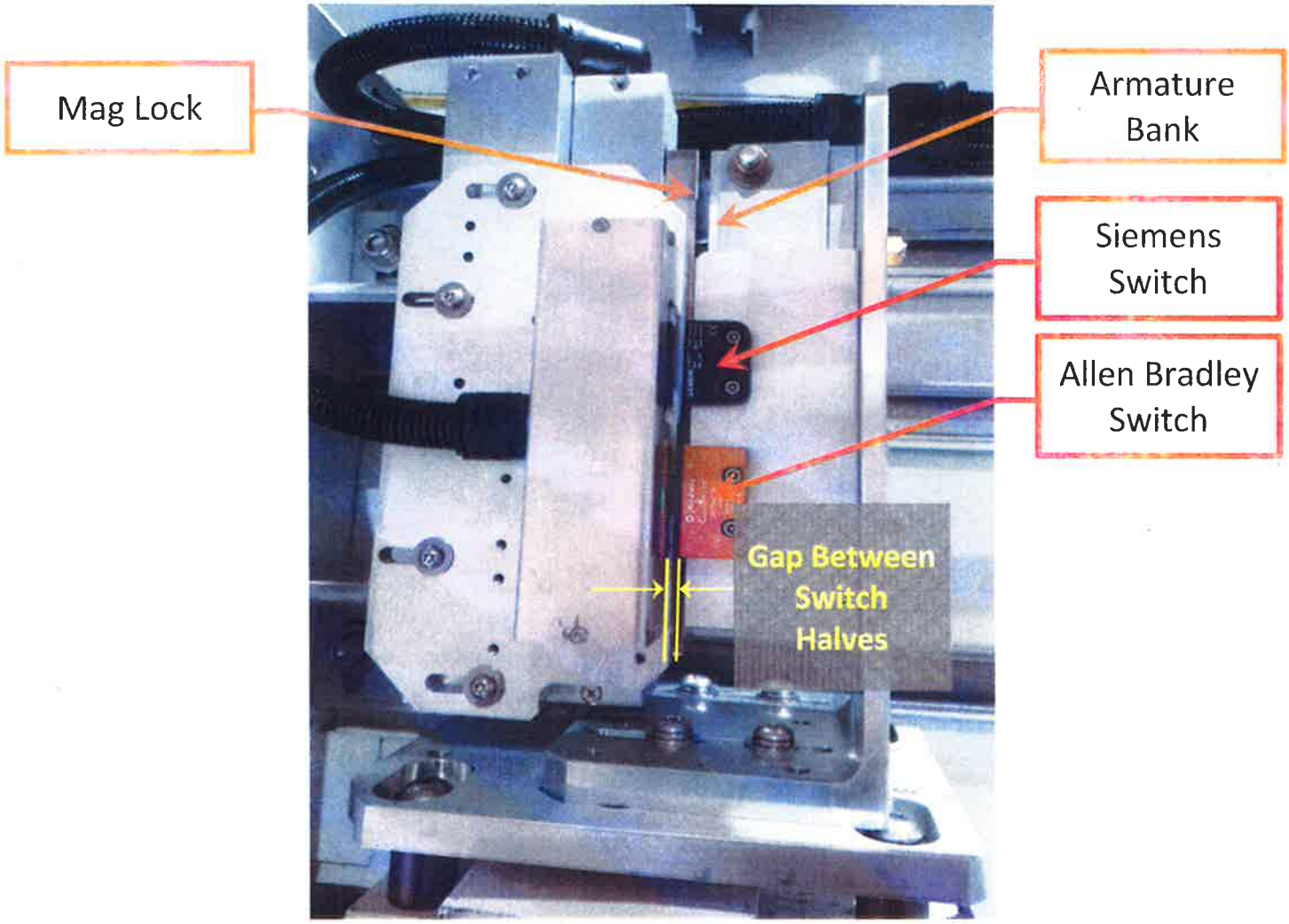

Figure 4. Operation #2: Gap Between Switch Halves

Submitted By: Ed Weigand — *Print Name*

Ed Weigand 6-9-17 — *Signature / Date*

Approvals (ready for certification)

Cognizant Engineer: CHRISTOPHER ENG — *Approved By (Print Name)*

Christopher E 6-13-17 — *Signature / Date*

Inspection/Test Record

BROOKHAVEN NATIONAL LABORATORY

Photon Sciences Directorate
National Synchrotron Light Source II

Document Title: **Hutch Door PPS Mechanical Inspection (Rolling Door)**

Beamline: 7 BM1

Door Location: 7 BMC **Type:** Left ~~Right~~
(circle one)

Reference Names / Nomenclature

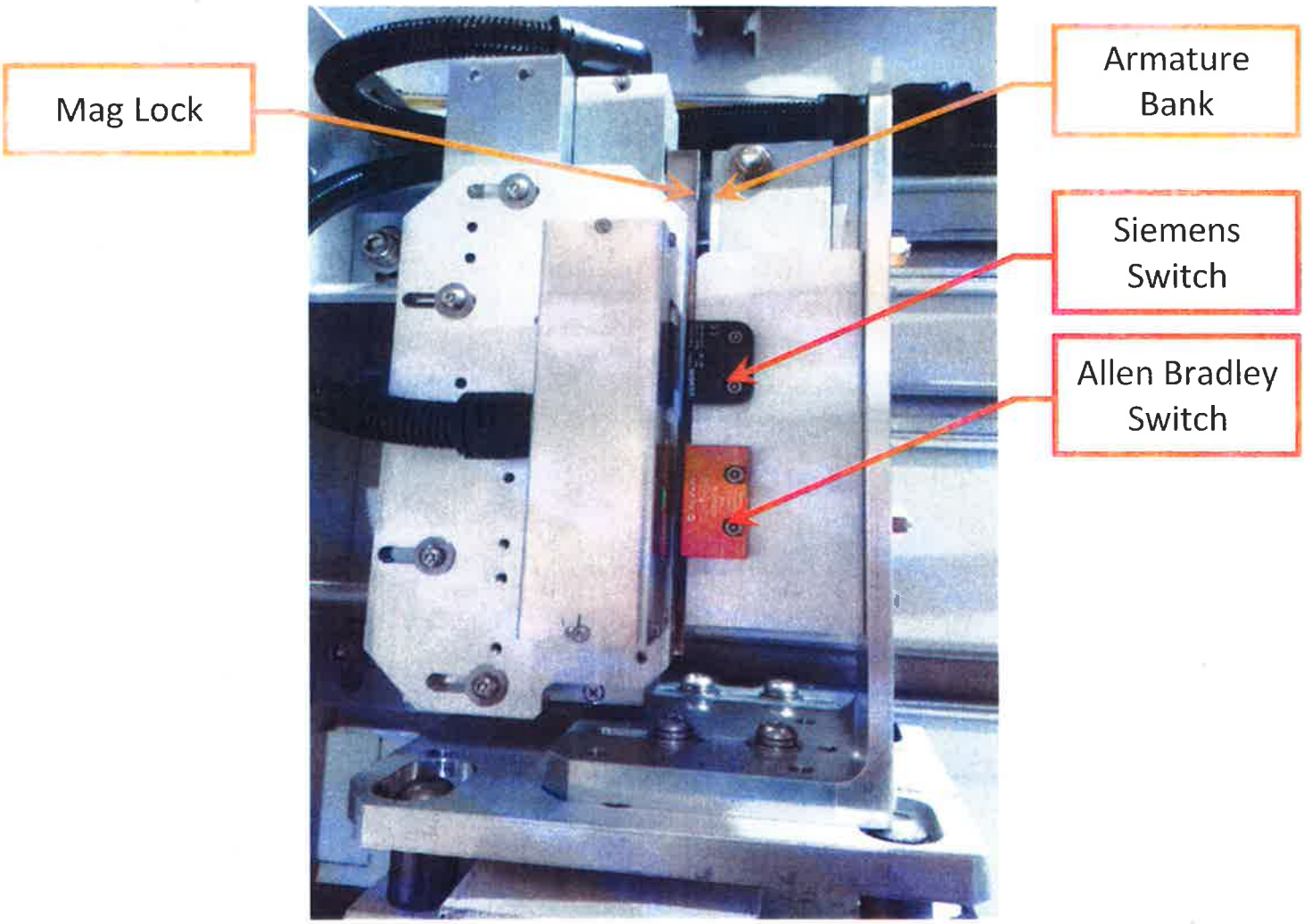

Figure 1. PPS Lock Shown in Closed Position

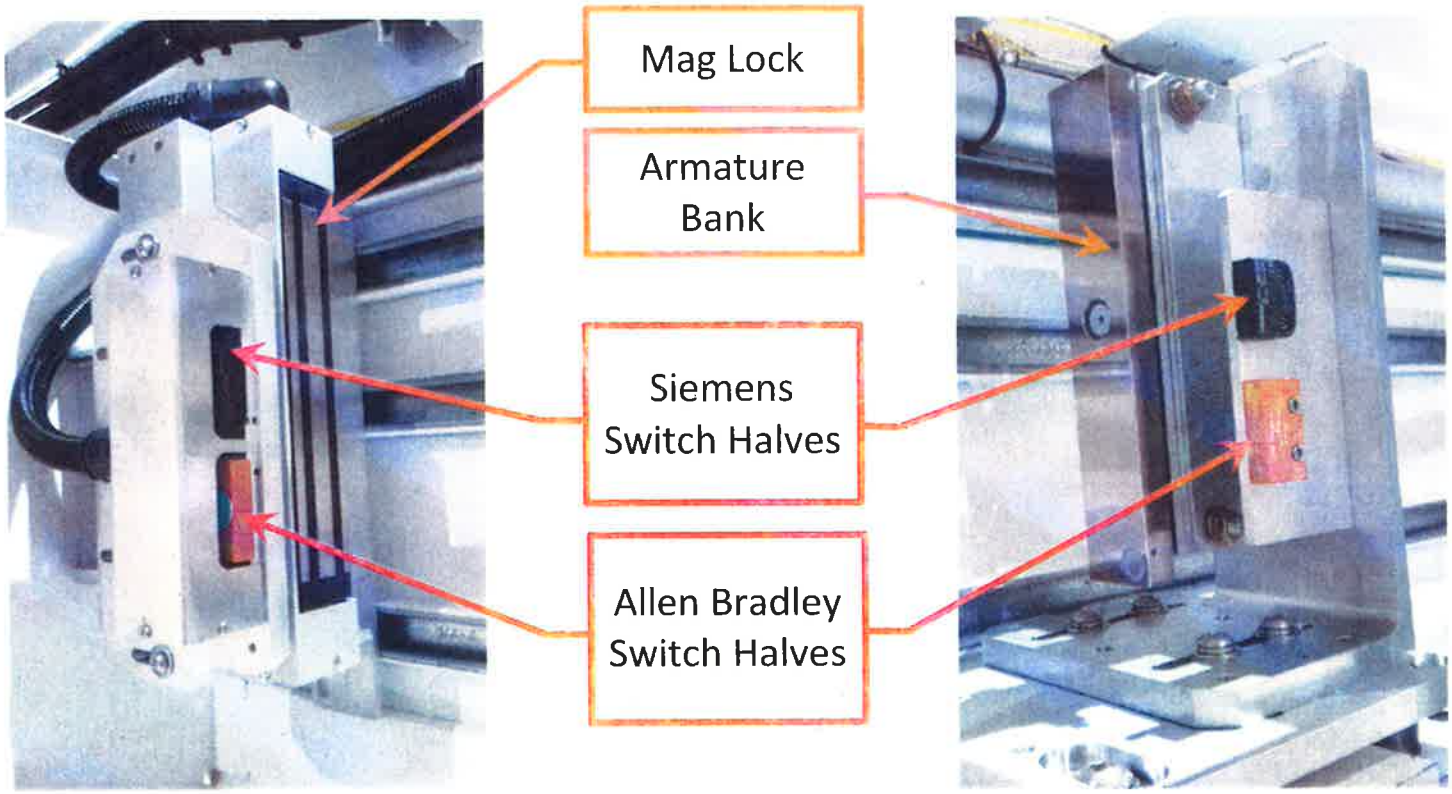

Figure 2. PPS Lock Shown in Open Position

(Left-hand door shown above, right-hand is similar, mirror image)

Op #

1) **Close door and ensure there is contact between mag lock and armature bank**

ID	Inspection Description	Pass / Fail	DR #	Name/Life #	Date
1	Contact between Mag Lock and Armature			Ed Weisinger 15372	6-9-17

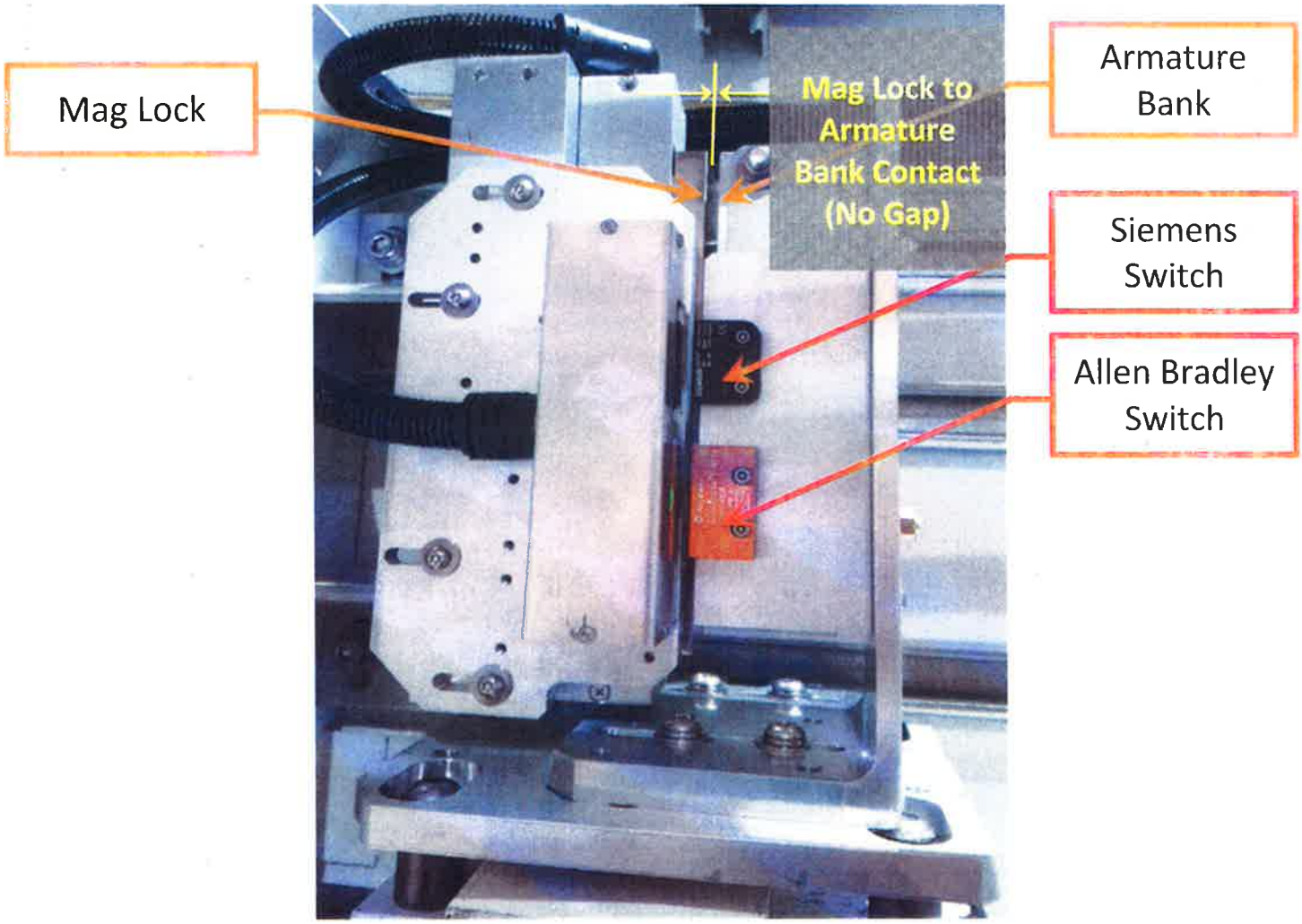

Figure 3. Operation #1: Mag Lock to Armature Gap

2) Use 1/4" precision spacer to set gap between Allen Bradley Switch Halves and Siemens Switch Halves

ID	Inspection Description	Nominal Gap	Gap Tolerance	Pass / Fail	DR #	Name/Life #	Date
2	Gap between Switch Halves	0.250 EW	+0.0"/ - 0.003"			Ed Weigand 15372	6-9-17

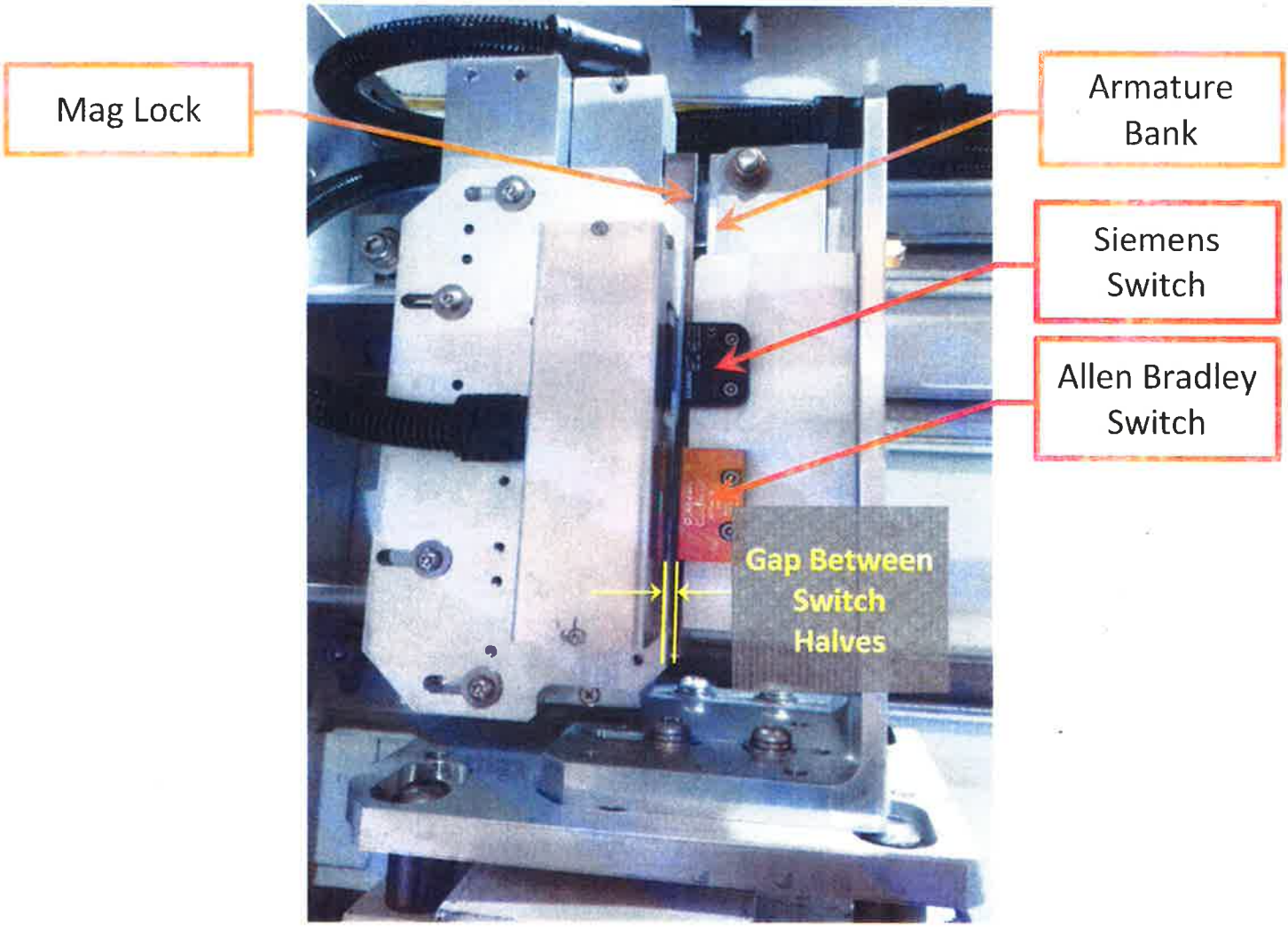

Figure 4. Operation #2: Gap Between Switch Halves

Submitted By: Ed Weigand — *Print Name* — Ed Weigand 6-9-17 — *Signature / Date*

Approvals (ready for certification)

Cognizant Engineer: CHRISTOPHER ENG — *Approved By (Print Name)* — Christopher E 6-13-17 — *Signature / Date*

Inspection/Test Record

BROOKHAVEN NATIONAL LABORATORY

Photon Sciences Directorate
National Synchrotron Light Source II

Document Title: **Hutch Door PPS Mechanical Inspection (Rolling Door)**

Beamline: 7 BM

Door Location: 7 BM B **Type:** Left / Right *(circle one)*

Reference Names / Nomenclature

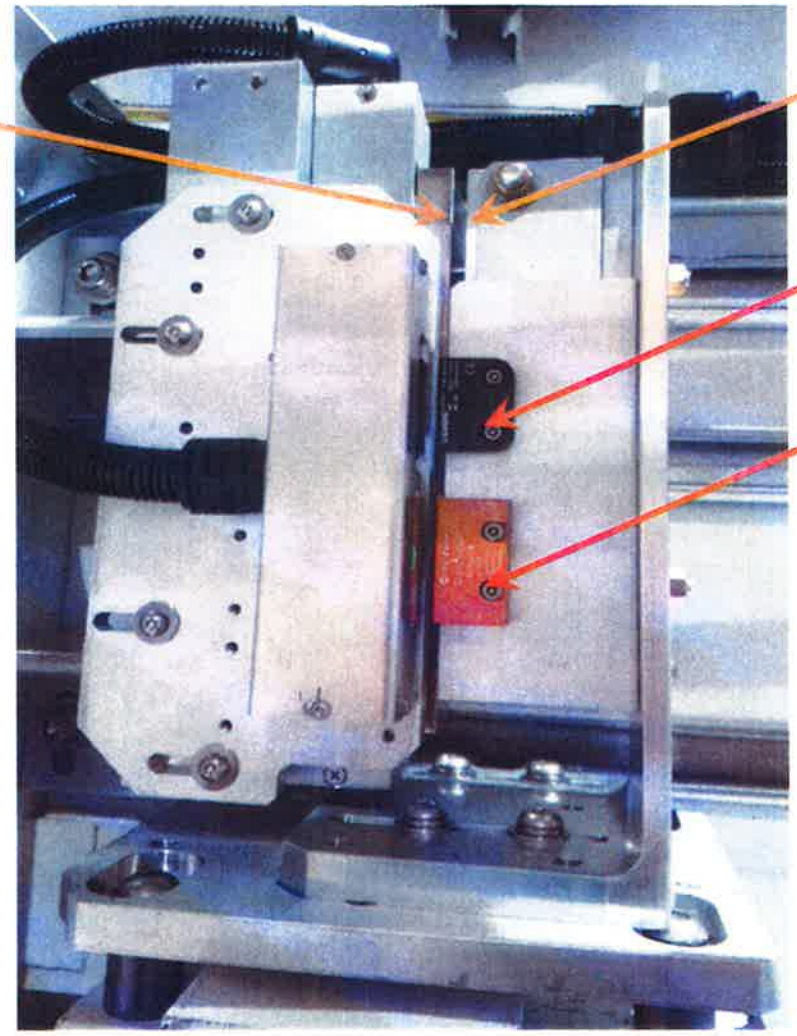

Figure 1. PPS Lock Shown in Closed Position

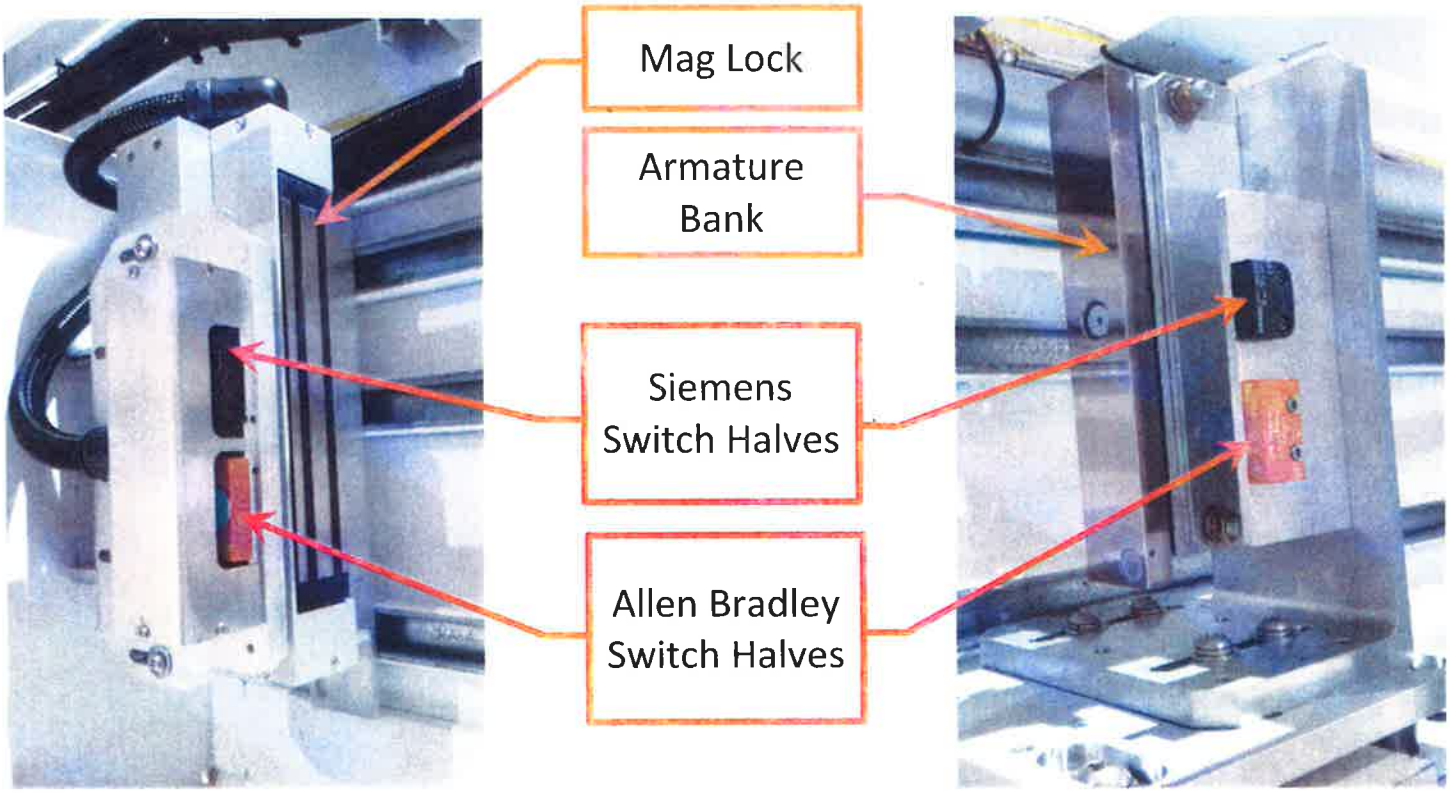

Figure 2. PPS Lock Shown in Open Position

(Left-hand door shown above, right-hand is similar, mirror image)

Op #

1) Close door and ensure there is contact between mag lock and armature bank

ID	Inspection Description	Pass / Fail	DR #	Name/Life #	Date
1	Contact between Mag Lock and Armature			Ed Weigand 15372	6-9-17

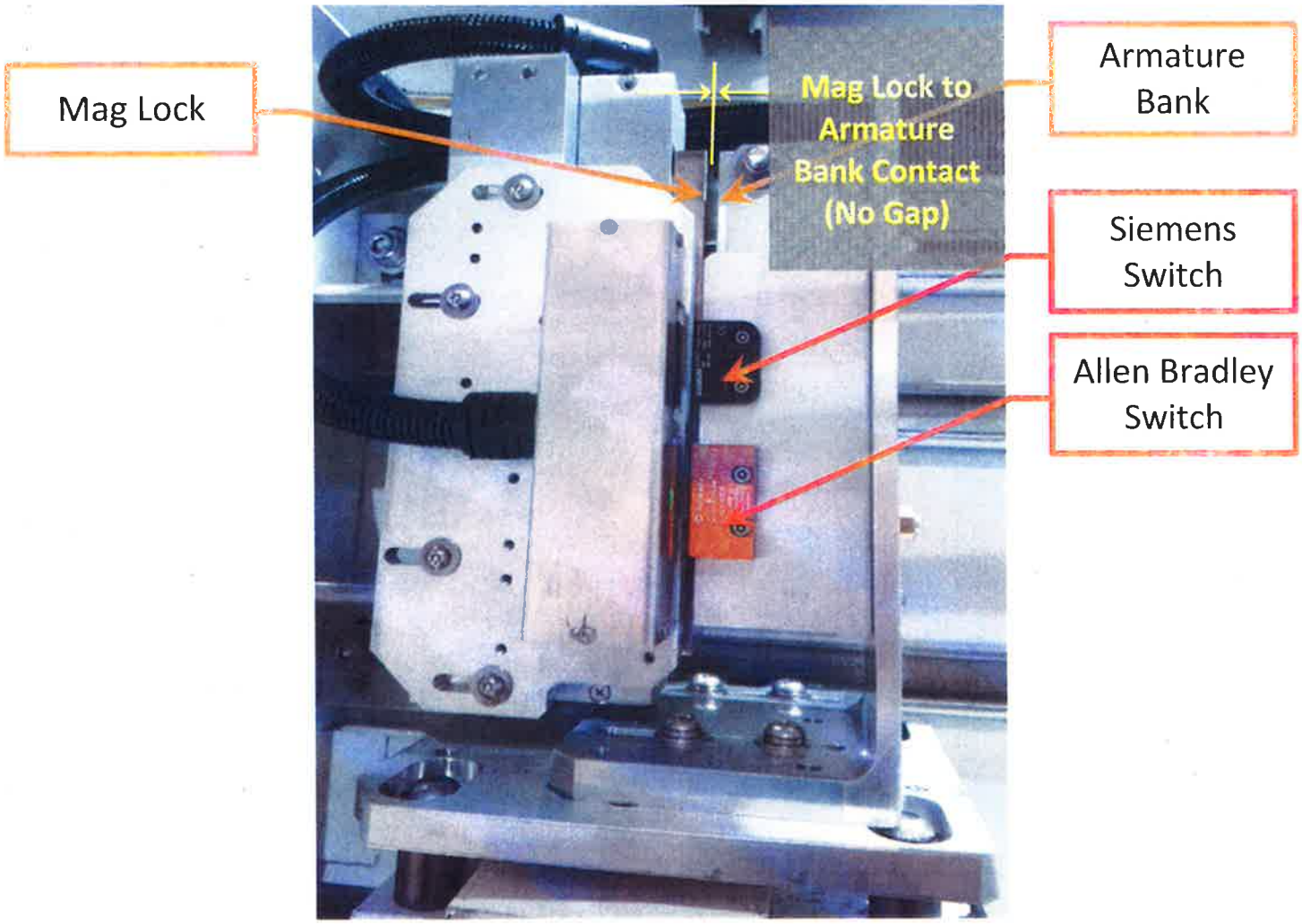

Figure 3. Operation #1: Mag Lock to Armature Gap

2) Use 1/4" precision spacer to set gap between Allen Bradley Switch Halves and Siemens Switch Halves

ID	Inspection Description	Nominal Gap	Gap Tolerance	Pass / Fail	DR #	Name/Life #	Date
2	Gap between Switch Halves	0.200	+0.0"/ - 0.003"			Ed Weigand 15372	6-9-17

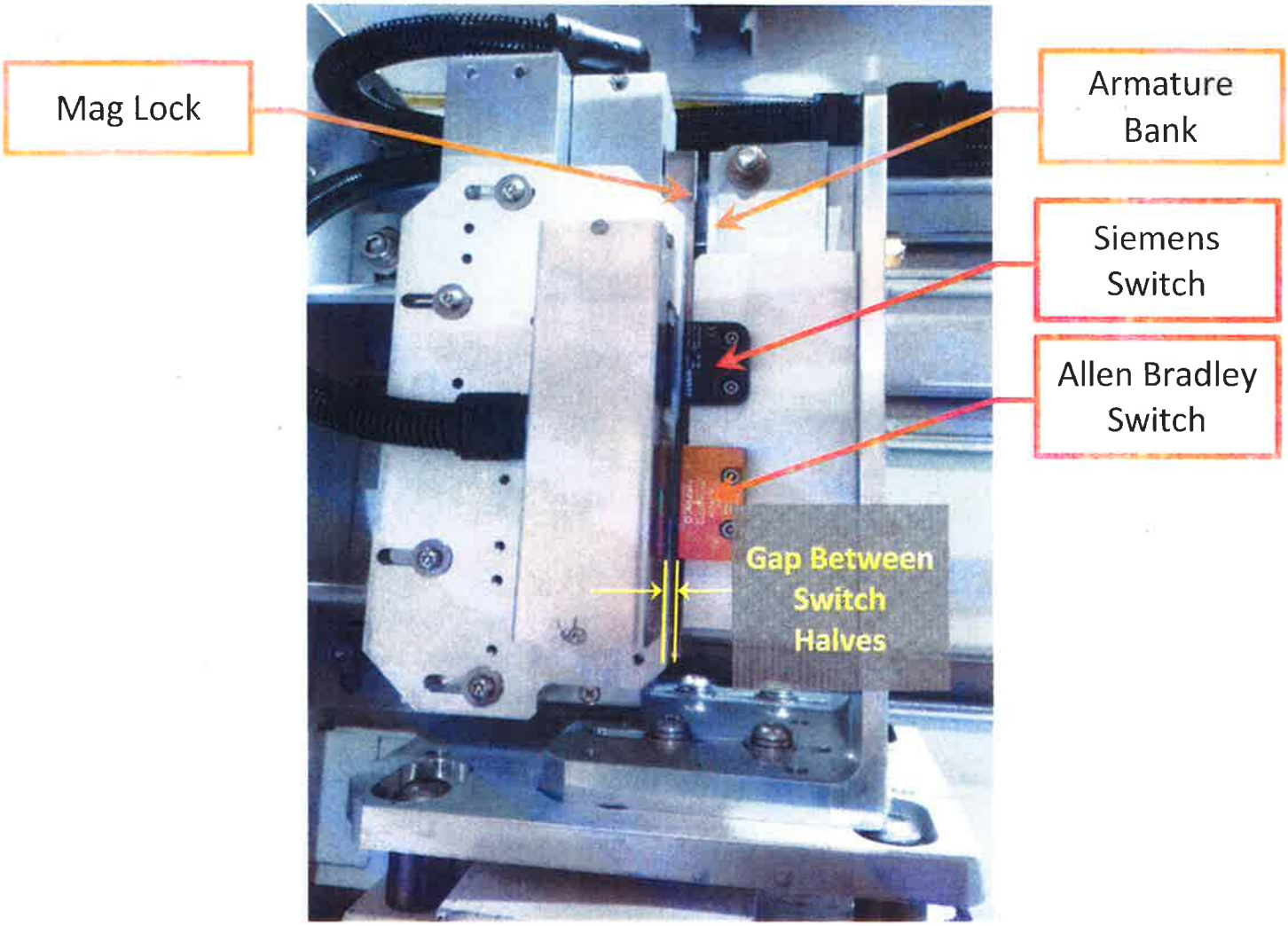

Figure 4. Operation #2: Gap Between Switch Halves

Submitted By: Ed Weigand — *Print Name* — *Signature / Date* 6-9-17

Approvals (ready for certification)

Cognizant Engineer: CHRISTOPHER ENG — *Approved By (Print Name)* — *Signature / Date* 6-13-17

Inspection/Test Record

BROOKHAVEN NATIONAL LABORATORY

Photon Sciences Directorate
National Synchrotron Light Source II

Document Title: **Hutch Labyrinth Door PPS Switch Mechanical Inspection Configuration 4**

Beamline: 7 BM B 1c

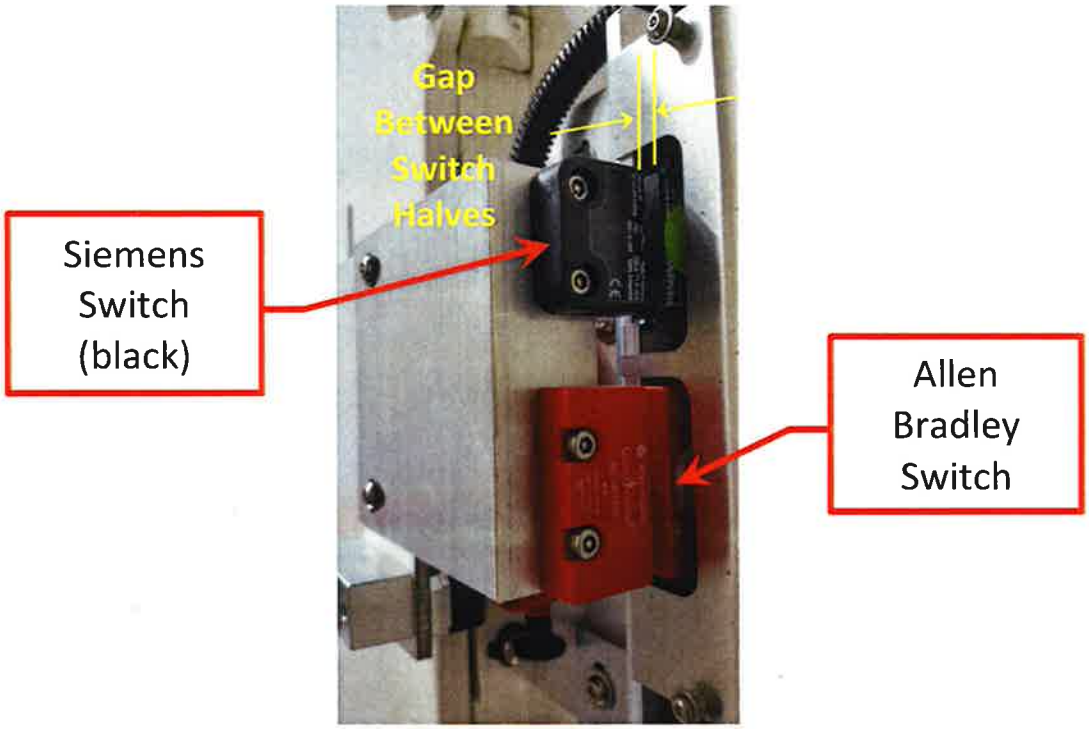

Figure 1. Hutch Wall Labyrinth Door PPS Lock (shown in closed position)

Op #

1) **Close labyrinth door.**

2) **Use precision spacer to set gap between Allen Bradley Switch Halves and Siemens Switch Halves**

ID	Inspection Description	Nominal Gap	Gap Tolerance	Pass / Fail	DR #	Name/Life #	Date
2	Gap between Switch Halves	0.20 "	+0.0"/ - 0.003"			Ed Weigand 15372	6-9-17

Submitted By: Ed Weigand — *Print Name* — *Signature / Date* 6-9-17

Approvals (ready for certification)

Cognizant Engineer: CHRISTOPHER ENG — *Approved By (Print Name)* — *Signature / Date* 6-14-2017

National Synchrotron Light Source

Building 743, National Synchrotron Light Source
Brookhaven National Laboratory
Upton, NY 11973-5000
Phone 631 344-2117
Fax 631 344-3238
zhong@bnl.gov

managed by Brookhaven Science Associates
for the U.S. Department of Energy

Memo

Date: August 22, 2017
To: George Ganetis, and Scott Buda
From: Zhong Zhong (chair), NSLS II Radiation Safety Committee
Subject: Radiation Safety Committee endorsement of the PPS design of 4-BM(XFM), 7-BM(QAS) and 18-ID (FXI) beamlines

Dear George and Scott

I would like to thank you for inviting the RSC sub-committee for PPS (personal protection system) interlock, Mohamed Benmerrouche, Dana Beavis, Robert Lee, and myself, to the review of the PPS logic diagrams for the 4-BM(XFM), 7-BM(QAS) and 18-ID (FXI) beamlines.

We reviewed the logic diagrams, sent beforehand on July 28, for the three beamlines. We then met with Scott Buda and George Ganetis on August 14, 2017 to discuss the drawings.

The following logic diagrams were reviewed:

1. Wiring diagram, 4-BM search logic, LT-EL-BL-EI-PPS-2040-96, rev. A by S. Buda.
2. Wiring diagram, 7-BM EESE B search logic, LT-EL-BL-EI-PPS-1070-96 rev. A by S. Buda
3. Wiring diagram, 18-ID search logic, LT-EL-BL-EI-PPS-1180-91 rev. A by S. Jarzabkowski.

We note that the PPS logic diagrams for these three beamlines, two three-pole wigglers and one damping wiggler, are similar to the operational NSLS-II beamlines.

While the IWG should be the primary reviewer for interlock logic diagrams, the RSC brings in broader expertise in areas such as radiation physics and PS shielding policy. This review by the RSC sub-committee compliments the recent shielding and ray-tracing reviews of XFM and QAS. The shielding and ray-tracing of FXI will be reviewed by the RSC in the future.

As a result of the sub-committee review, the RSC concurs that the PPS designs of 4-BM, 7-BM and 18-ID beamlines meet Photon Sciences shielding policy.

Radiation Safety Committee

Name	*Expertise*	*Directorate*
Andrew Ackerman	Deputy ESH Manager	PS
Andi Barbour	Beam Line Physicist	PS
Dana Beavis	Experimental Nuclear Particle Physics	NPP
Mohamed Benmerrouche	Nuclear and Radiation Physics	PS
Scott Buda	Personnel Protective Systems	PS
Ray Fliller	Accelerator Physicist	PS
Wah-Keat Lee	Beam Line Physicist	PS
Boris Podobedov	Accelerator Physics	PS
Chuck Schaefer	Accelerator SME	ESH
Lutz Wiegart	Beam Line Physicist	PS
Zhong Zhong	Beam Line Physicist	PS
Emil Zitvogel	Accelerator Operations	PS
Ashley Shoemaker-Skokov	Administrative Support	PS

Ray-tracing sub-committee

Andrew Ackerman	Deputy ESH Manager	PS
Mary Carlucci-Dayton	Mechanical Engineer	PS
Wah-Keat Lee	Beam Line Physicist	PS
Chuck Schaefer	Accelerator SME	ESH
Christopher Stelmach	Designer	PS
Lutz Wiegart	Beam Line Physicist	PS
Zhong Zhong	Beam Line Physicist	PS

PPS sub-committee

Dana Beavis	Experimental Nuclear Particle Physics	NPP
Mohamed Benmerrouche	Nuclear and Radiation Physics	PS
Scott Buda	Personnel Protective Systems	PS
Robert Lee	ESH manager	PS
Zhong Zhong	Beam Line Physicist	PS

REV	DESCRIPTION	BY	DATE	CHK	APP
A	INITIAL RELEASE	JARZABKOWSKI	7/27/2017	JM	AS

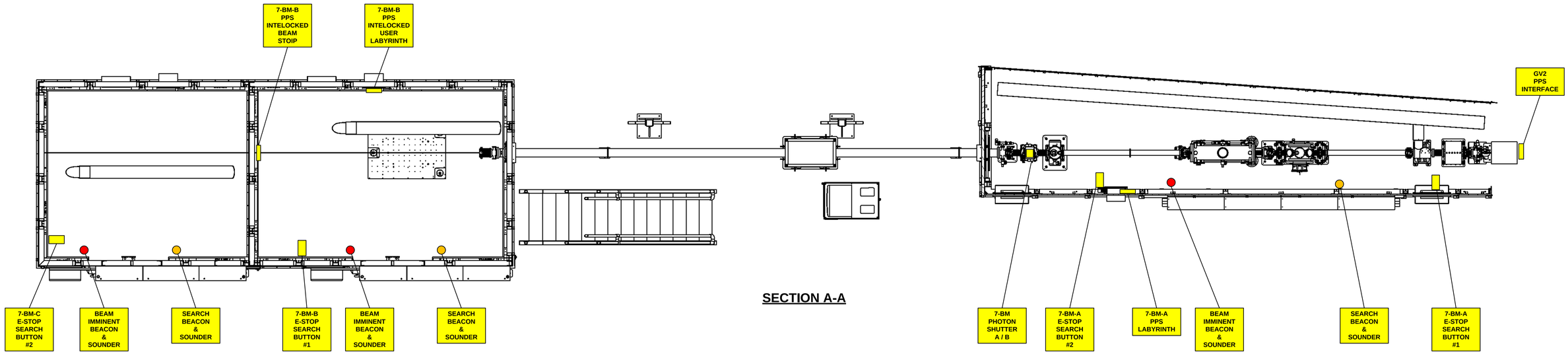

SECTION A-A

BEAM DIRECTION

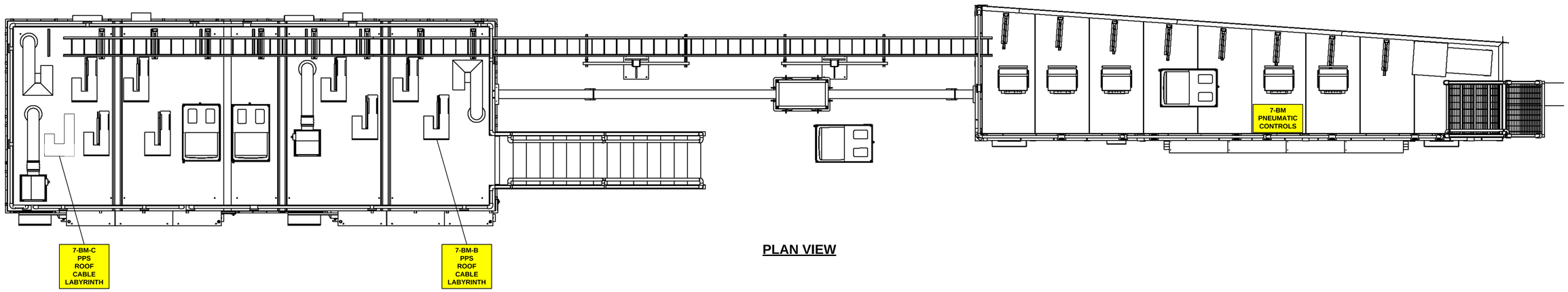

PLAN VIEW

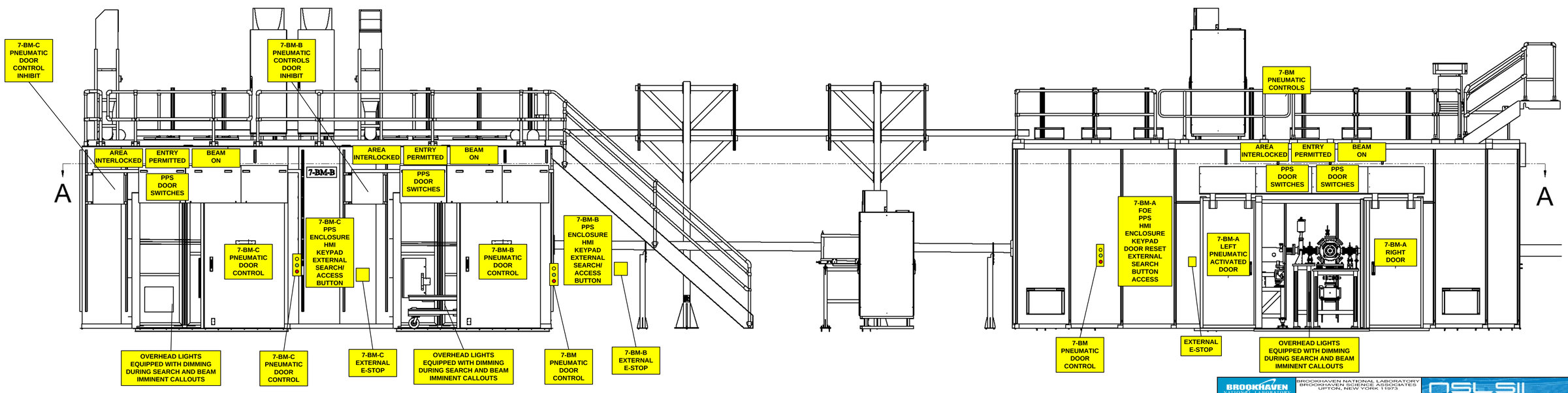

BROOKHAVEN NATIONAL LABORATORY

BROOKHAVEN NATIONAL LABORATORY
BROOKHAVEN SCIENCE ASSOCIATES
UPTON, NEW YORK 11973
Exploring Life's Mysteries, Protecting its Future

NSLSII NATIONAL SYNCHROTRON LIGHT SOURCE II

UNLESS OTHERWISE SPECIFIED
INTEGER TOLERANCES ± .06
DECIMAL TOLERANCES
.X ± .030
.XX ± .015
.XXX ± .010
ANGULAR TOLERANCE ± 0.5°
UNSPECIFIED RADII .02 MAX
125 BREAK SHARP CORNERS AND EDGES
FINISH MAX .03 MIN .005

UNLESS OTHERWISE SPECIFIED DIMENSIONS ARE IN INCHES
DIMENSIONS IN [ ] ARE MILLIMETERS.EQUIV. FOR REF. ONLY
INTERPRET DRAWING AS PER ANSI Y14.5 OR Y32.2

ESH&Q RISK LEVEL A-2

		DATE
DRWN BY	S. JARZABKOWSKI	7/27/2017
CHK BY	J. MALLEY	8/03/2017
ENG APP	S. BUDA	8/01/2017
SUPV APP	G. GANETIS	8/04/2017
QA APP	E. CHESWICK	8/02/2017
ESH APP	R. LEE	8/03/2017

OUTSTANDING ECN'S

JOB NUMBER | USED ON DWG. NO.

PPS EQUIPMENT LAYOUT DRAWING, FOR 7-BM HUTCH (QAS)

DRAWING DIRECTORY: LT-EL-BL-EI
DRAWING NUMBER: LT-EL-BL-EI-HCH-2070
REV: A

COMPUTER REPRODUCABLE | SCALE: N/A | SHEET 1 OF 1

LT-EL-BL-EI-HCH-2070

FIRMWARE/SOFTWARE/PROGRAMMING LOGIC

DESCRIPTION:

PLC Program for Pentant 3 Front End PPS CPU A Chain

PROGRAM	**Siemens Step 7**	
VERSION	**V5.5 + SP4**	
DEVICE	**SIEMENS CPU 319-3 PN/DP**	
OPERATING SYSTEM	**WINDOWS**	
PROGRAMMING METHOD	**LADDER LOGIC**	
FILE	**Pentant_3_Front End _Rev G**	

REV	DESCRIPTION	BY	DATE	CHK	APP
A	INITIAL RELEASE	SB	10/23/14	MP	SB
B	REVISED PER ECN# 015-1013	SB	10/24/14	MP	SB
C	REVISED PER ECN# 015-1154	SB	04/24/15	MP	SB
D	REVISED PER ECN# 016-1451	SB	03/01/16	MP	SB
E	REVISED PER ECN# 016-1472	SB	06/03/16	MP	SB
F	REVISED PER ECN# 017-1711	SB	01/06/17	MP	SB
G	REVISED PER ECN# 017-1776	SB	01/06/17	MP	SB

LT-EL-BL-EI-PPS-0101-72

BROOKHAVEN NATIONAL LABORATORY

BROOKHAVEN NATIONAL LABORATORY
BROOKHAVEN SCIENCE ASSOCIATES
UPTON, NEW YORK 11973
Exploring Life's Mysteries, Protecting its Future

NSLS II
NATIONAL SYNCHROTRON LIGHT SOURCE II

UNLESS OTHERWISE SPECIFIED
INTEGER TOLERANCES
± .06
DECIMAL TOLERANCES
.X ± .030
.XX ± .015
.XXX ± .010
ANGULAR TOLERANCE ± 0.5°
UNSPECIFIED RADII .02 MAX
125 BREAK SHARP CORNERS AND EDGES
FINISH MAX .03 MIN .005

UNLESS OTHERWISE SPECIFIED DIMENSIONS ARE IN INCHES DIMENSIONS IN [*.**] ARE MILLIMETERS EQUIV. FOR REF. ONLY

ESH&Q RISK LEVEL A-1

INTERPRET DRAWING AS PER ANSI Y14.5 OR Y32.2

		DATE
DRWN BY	S.BUDA	10/23/14
CHK BY	M.PFEFFER	10/23/14
ENG APP	S.BUDA	10/23/14
SUPV APP	G.GANETIS	10/23/14
QA APP	E.CHESWICK	10/22/14
ESH APP	B.LEE	10/22/14

OUTSTANDING ECN'S

PROGRAMMABLE LOGIC
NSLS-II-PENTANT 3 FRONT END PPS CPU A CHAIN

LT-EL-BL-IN (DRAWING DIRECTORY) | LT-EL-BL-EI-PPS-0101-72 (DRAWING NUMBER) | G (REV)

COMPUTER REPRODUCIBLE | SCALE: N/A | SHEET 1 OF 1

JOB NUMBER | USED ON DWG. NO.

FIRMWARE/SOFTWARE/PROGRAMMING LOGIC

DESCRIPTION:

FRONT END PPS MAIN CPU PROGRAM PENTANT 3 B CHAIN

PROGRAM	**RSLOGIX 5000**	
VERSION	**20.03**	
DEVICE	**ALLEN BRADLEY 1768-L43S**	
OPERATING SYSTEM	**WINDOWS**	
PROGRAMMING METHOD	**ETHERNET**	
FILE	**LT_EL_BL_EI_PPS_0101_82_Rev_G.ACD**	

REV	DESCRIPTION	BY	DATE	CHK	APP
A	INITIAL RELEASE	SB	10/23/14	MP	SB
B	REVISED PER ECN -015-1198	SB	10/19/15	MP	SB
C	REVISED PER ECN -015-1343	SX	1/20/16	MP	SB
D	REVISED PER ECN -016-1468	SX	5/27/16	MP	SB
E	REVISED PER ECN -016-1517	SX	7/15/16	MP	SB
F	REVISED PER ECN -017-1703	SX	1/04/17	MP	SB
G	REVISED PER ECN -017-1759	SX	5/25/17	MP	SB

LT-EL-BL-EI-PPS-0101-82

BROOKHAVEN NATIONAL LABORATORY

BROOKHAVEN NATIONAL LABORATORY
BROOKHAVEN SCIENCE ASSOCIATES
UPTON, NEW YORK 11973
Exploring Life's Mysteries, Protecting its Future

NSLS II
NATIONAL SYNCHROTRON LIGHT SOURCE II

UNLESS OTHERWISE SPECIFIED
INTEGER TOLERANCES
± .06
DECIMAL TOLERANCES
.X ± .030
.XX ± .015
.XXX ± .010
ANGULAR TOLERANCE ± 0.5°
UNSPECIFIED RADII .02 MAX
125 BREAK SHARP CORNERS AND EDGES
FINISH MAX .03 MIN .005

UNLESS OTHERWISE SPECIFIED DIMENSIONS ARE IN INCHES DIMENSIONS IN [*.**] ARE MILLIMETERS EQUIV. FOR REF. ONLY

ESH&Q RISK LEVEL A-1

INTERPRET DRAWING AS PER ANSI Y14.5 OR Y32.2

OUTSTANDING ECN'S

		DATE
DRWN BY	S.BUDA	10/23/14
CHK BY	M.PFEFFER	11-17-14
ENG APP	S.BUDA	11-17-14
SUPV APP	G.GANETIS	11-17-14
QA APP	E.CHESWICK	12-01-14
ESH APP	B.LEE	11-19-14

PROGRAMMABLE LOGIC

NSLS-II-FRONT END PPS MAIN CPU PROGRAM PENTANT 3 B CHAIN

LT-EL-BL-IN — DRAWING DIRECTORY
LT-EL-BL-EI-PPS-0101-82 — DRAWING NUMBER
G — REV

COMPUTER REPRODUCIBLE | SCALE: N/A | SHEET 1 OF 1

JOB NUMBER | USED ON DWG. NO.

REV	DESCRIPTION	DATE	BY	CHECKED	APP
A	INITIAL RELEASE	9/08/2014	SEJ	JM	SB
B	REVISED PER ECN LT-ECN-016-1604	9/08/2016	SEJ	JM	SB

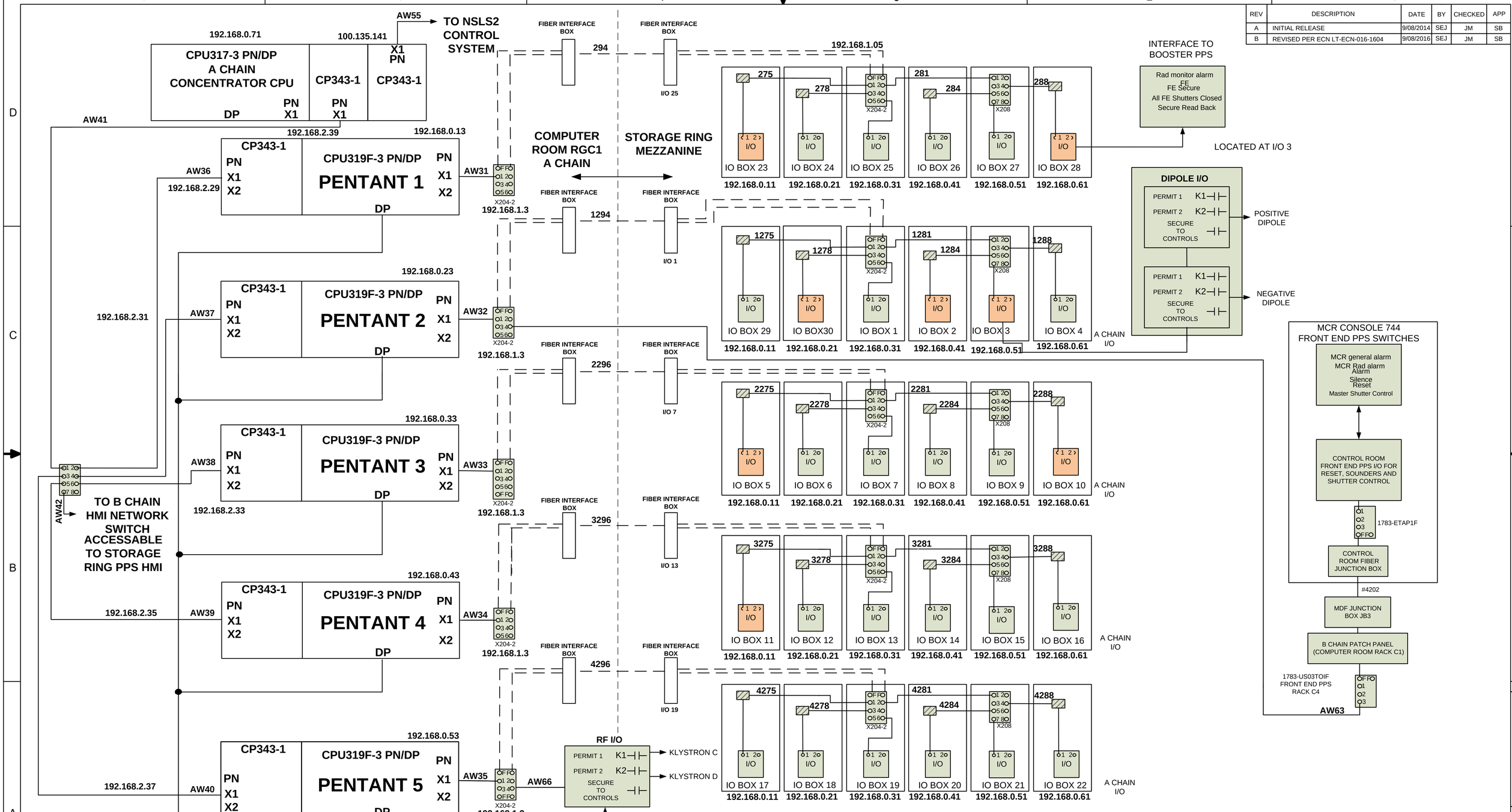

LT-EL-BL-EI-PPS-0101-90

BROOKHAVEN NATIONAL LABORATORY

BROOKHAVEN NATIONAL LABORATORY
BROOKHAVEN SCIENCE ASSOCIATES
UPTON, NEW YORK 11973
Exploring Life's Mysteries, Protecting Its Future

NSLSII NATIONAL SYNCHROTRON LIGHT SOURCE II

UNLESS OTHERWISE SPECIFIED INTEGER TOLERANCES ± .06
DECIMAL TOLERANCES .X ± .030 .XX ± .015 .XXX ± .010
ANGULAR TOLERANCE ± 0.5°
UNSPECIFIED RADII .02 MAX
125 BREAK SHARP CORNERS AND EDGES
FINISH MAX .03 MIN .005

UNLESS OTHERWISE SPECIFIED DIMENSIONS ARE IN INCHES DIMENSIONS IN [ ] ARE MILLIMETERS EQUIV. FOR REF. ONLY
INTERPRET DRAWING AS PER ANSI Y14.5 OR Y32.2
ESH&Q RISK LEVEL A-1
OUTSTANDING ECN'S

		DATE
DRWN BY	S. Jarzabkowski	9/08/2014
CHK BY	J. Malley	9/08/2014
ENG APP	S. Buda	9/08/2014
SUPV APP	G. Ganetis	9/10/2014
QA APP	E. Cheswick	9/08/2014
ESH APP	R. Lee	9/10/2014

WIRING DIAGRAM, FRONT END PPS CPU RACK A CHAIN

LT-EL-BL-EI (DRAWING DIRECTORY) | LT-EL-BL-EI-PPS-0101-90 (DRAWING NUMBER) | B (REV.)

COMPUTER REPRODUCIBLE | SCALE: N/A | SHEET 1 OF 5

JOB NUMBER | USED ON DWG. NO.

REV	DESCRIPTION	DATE	BY	CHECKED	APP
	SEE SHEET 1				

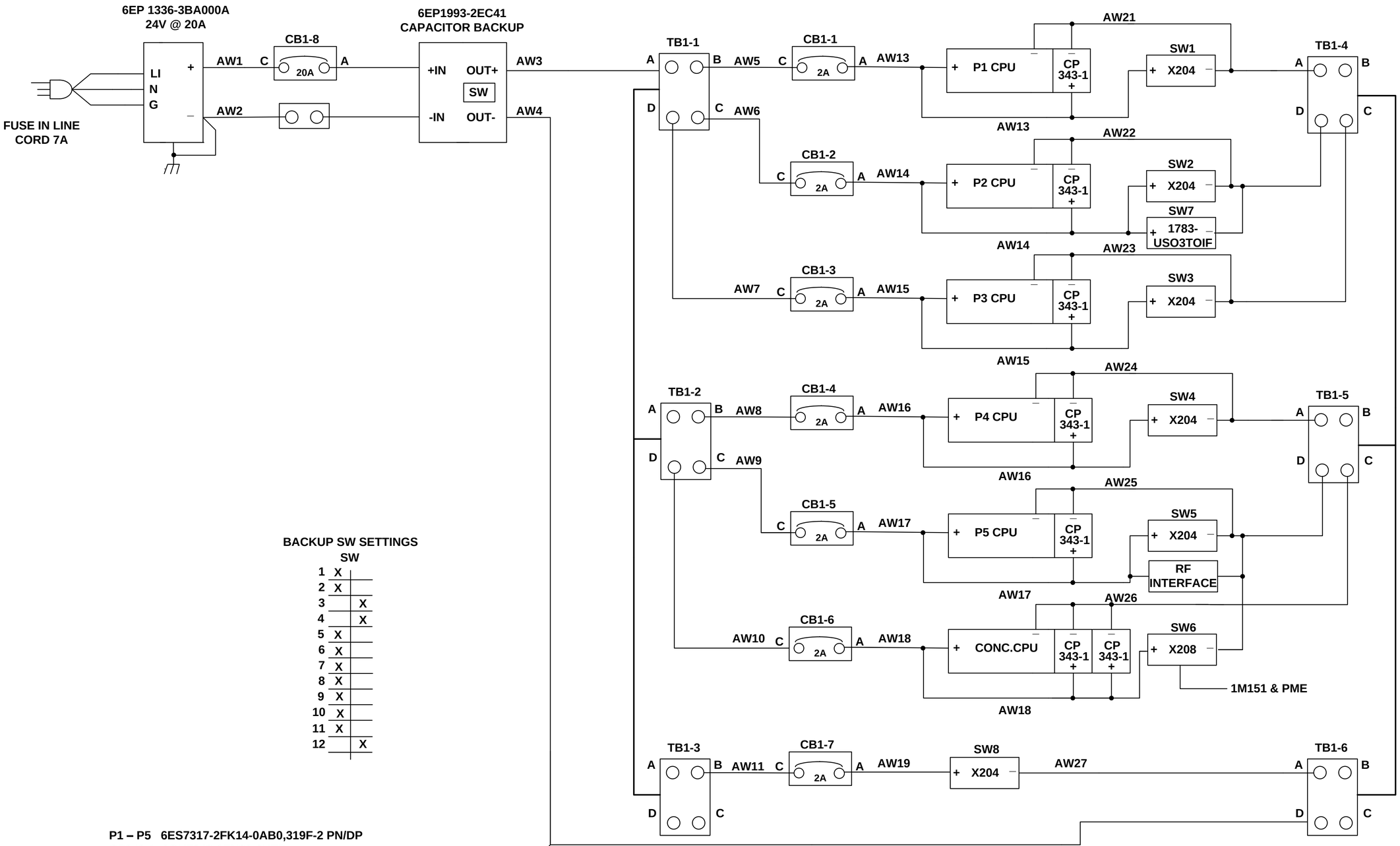

BACKUP SW SETTINGS

	SW	
1	X	
2	X	
3		X
4		X
5	X	
6	X	
7	X	
8	X	
9	X	
10	X	
11	X	
12		X

P1 – P5 6ES7317-2FK14-0AB0,319F-2 PN/DP
CP343-1 6GK7343-1EX30-0XED
SW2 6GK52061-1BB10-2AA3,X206-1
SW1,5 & 8 6GK55204-2BB10-2AA3,X204-2
SW6 6GK5208-OBA10-2AA3,X208
SW7 1783-USO3TOIF

LT-EL-BL-EI-PPS-0101-90

LT-EL-BL-EI (DRAWING DIRECTORY)	LT-EL-BL-EI-PPS-0101-90 (DRAWING NUMBER)	B (REV)
COMPUTER REPRODUCIBLE	SCALE: N/A	SHEET 2 OF 5

REV	DESCRIPTION	BY	DATE	CHK	APP
	SEE SHEET 1				

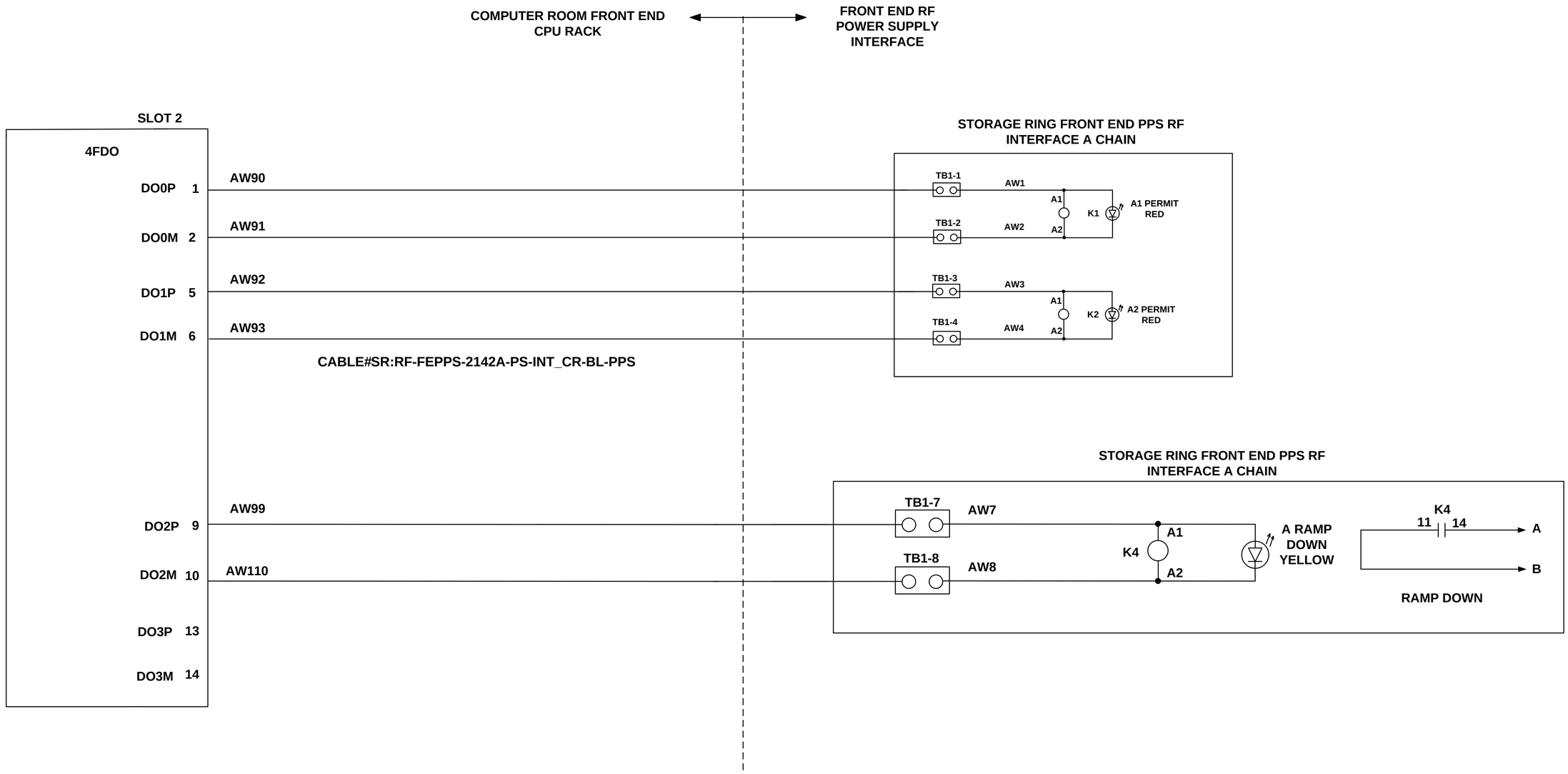

A

LT-EL-BL-EI	LT-EL-BL-EI-PPS-0101-90	B
DRAWING DIRECTORY	DRAWING NUMBER	REV

COMPUTER REPRODUCIBLE | SCALE: N/A | SHEET 3 OF 5

LT-EL-BL-EI-PPS-0101-90

REV	DESCRIPTION	BY	DATE	CHK	APP
	SEE SHEET 1				

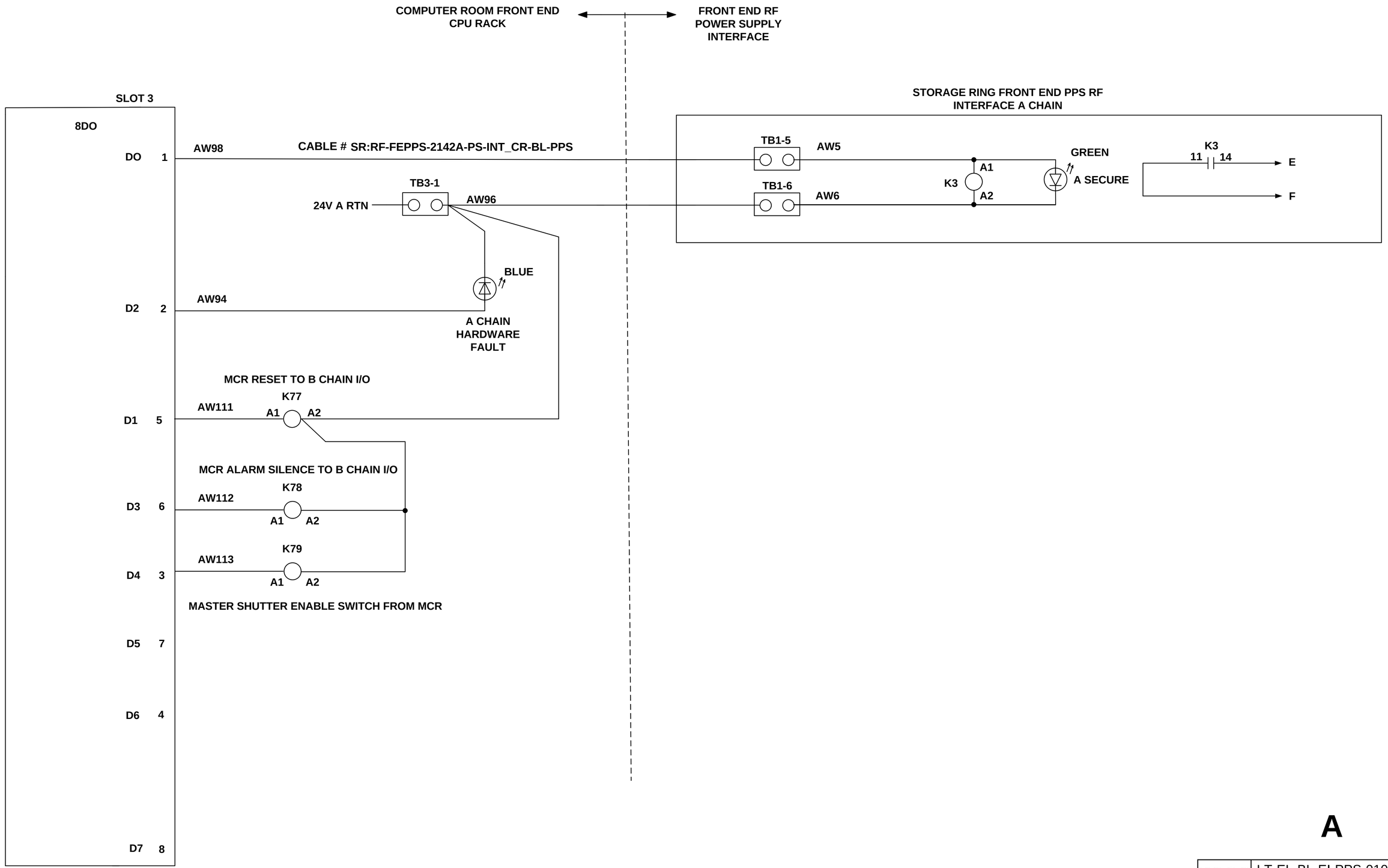

A

LT-EL-BL-EI	LT-EL-BL-EI-PPS-0101-90	B
DRAWING DIRECTORY	DRAWING NUMBER	REV

COMPUTER REPRODUCIBLE | SCALE: N/A | SHEET 4 OF 5

LT-EL-BL-EI-PPS-0101-90

REV	DESCRIPTION	BY	DATE	CHK	APP
	SEE SHEET 1				

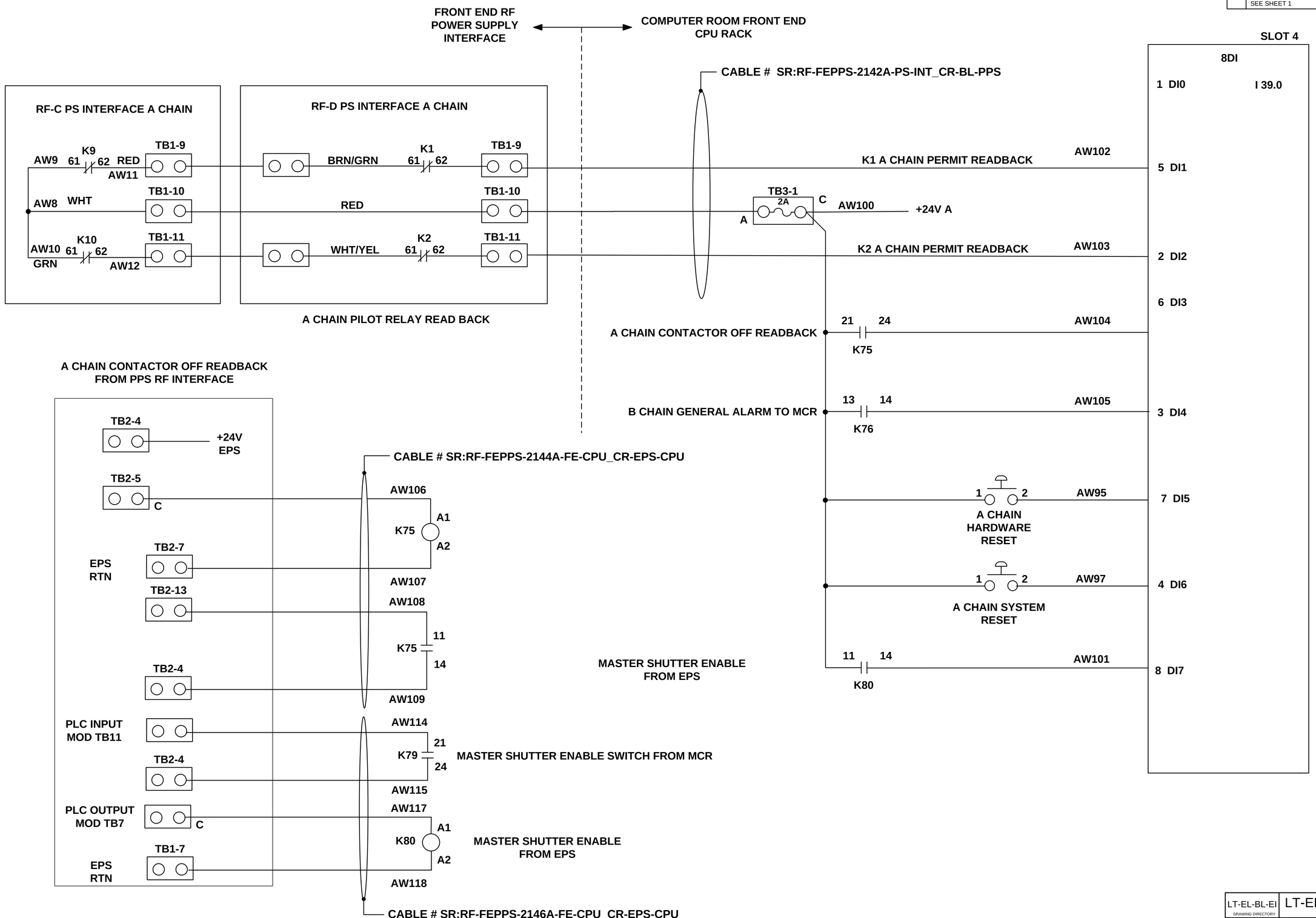

A

LT-EL-BL-EI	LT-EL-BL-EI-PPS-0101-90	B
DRAWING DIRECTORY	DRAWING NUMBER	REV

COMPUTER REPRODUCIBLE | SCALE: N/A | SHEET 5 OF 5

LT-EL-BL-EI-PPS-0101-90

REV	DESCRIPTION	DATE	BY	CHECKED	APP
A	INITIAL RELEASE	9/08/2014	SEJ	JM	SB
B	REVISED PER ECN LT-ECN-016-1605	9/08/2016	SEJ	JM	SB

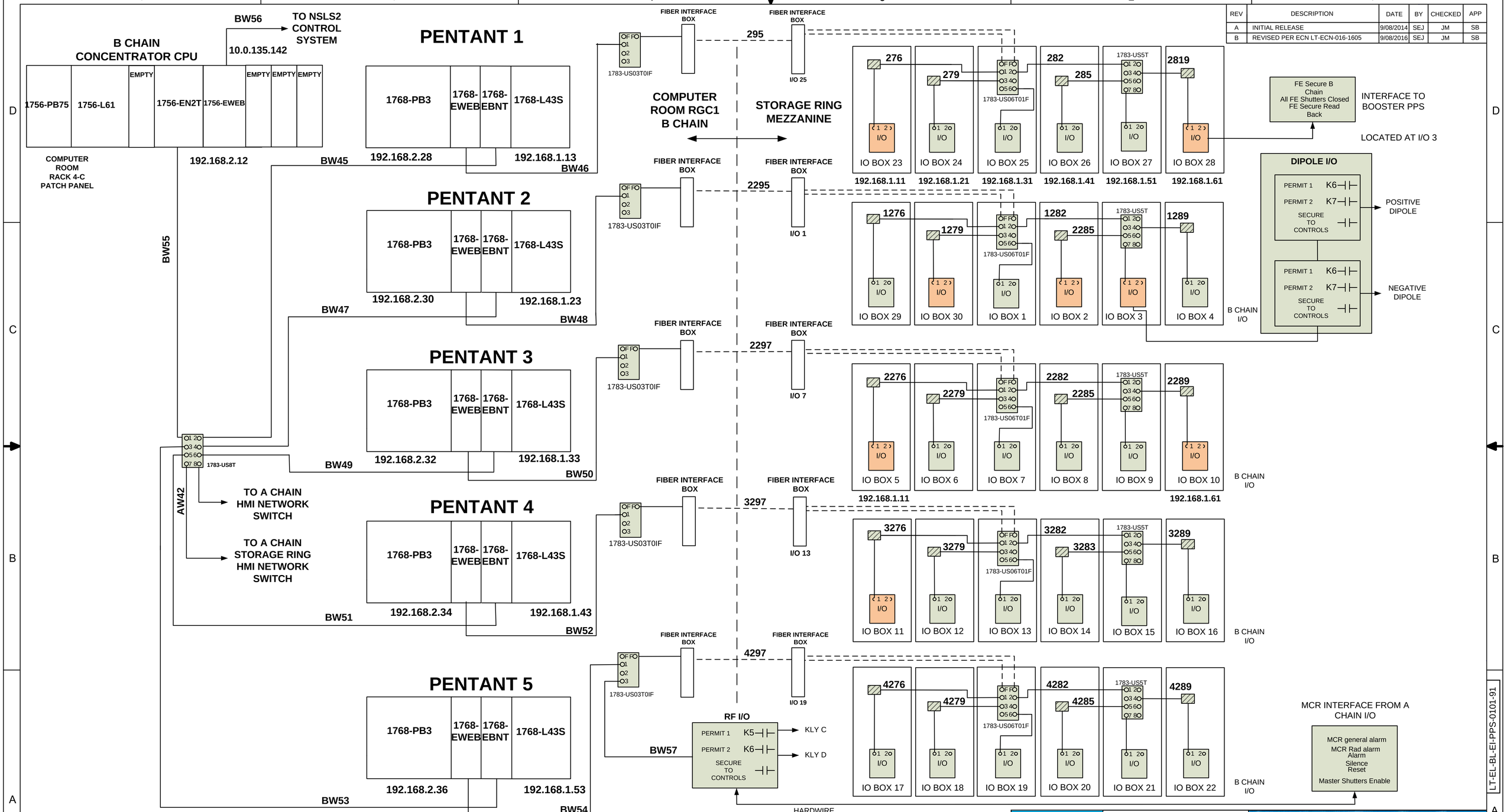

BROOKHAVEN NATIONAL LABORATORY

BROOKHAVEN NATIONAL LABORATORY
BROOKHAVEN SCIENCE ASSOCIATES
UPTON, NEW YORK 11973
Exploring Life's Mysteries, Protecting its Future

NSLS II NATIONAL SYNCHROTRON LIGHT SOURCE II

UNLESS OTHERWISE SPECIFIED
INTEGER TOLERANCES ± .06
DECIMAL TOLERANCES
.X ± .030
.XX ± .015
.XXX ± .010
ANGULAR TOLERANCE ± 0.5°
UNSPECIFIED RADII .02 MAX
125 BREAK SHARP CORNERS AND EDGES
FINISH MAX .03 MIN .005

UNLESS OTHERWISE SPECIFIED DIMENSIONS ARE IN INCHES DIMENSIONS IN [ ] ARE MILLIMETERS EQUIV. FOR REF. ONLY
INTERPRET DRAWING AS PER ANSI Y14.5 OR Y32.2

ESH&Q RISK LEVEL A-1
OUTSTANDING ECN'S

		DATE
DRWN BY	S. Jarzabkowski	9/08/2014
CHK BY	J. Malley	9/08/2014
ENG APP	S. Buda	9/08/2014
SUPV APP	G. Ganetis	9/10/2014
QA APP	E. Cheswick	9/08/2014
ESH APP	R. Lee	9/10/2014

WIRING DIAGRAM, FRONT END PPS CPU RACK B CHAIN

LT-EL-BL-EI (DRAWING DIRECTORY) | LT-EL-BL-EI-PPS-0101-91 (DRAWING NUMBER) | B (REV)

COMPUTER REPRODUCIBLE | SCALE: N/A | SHEET 1 OF 5

JOB NUMBER | USED ON DWG. NO.

LT-EL-BL-EI-PPS-0101-91

REV	DESCRIPTION	DATE	BY	CHECKED	APP
	SEE SHEET 1				

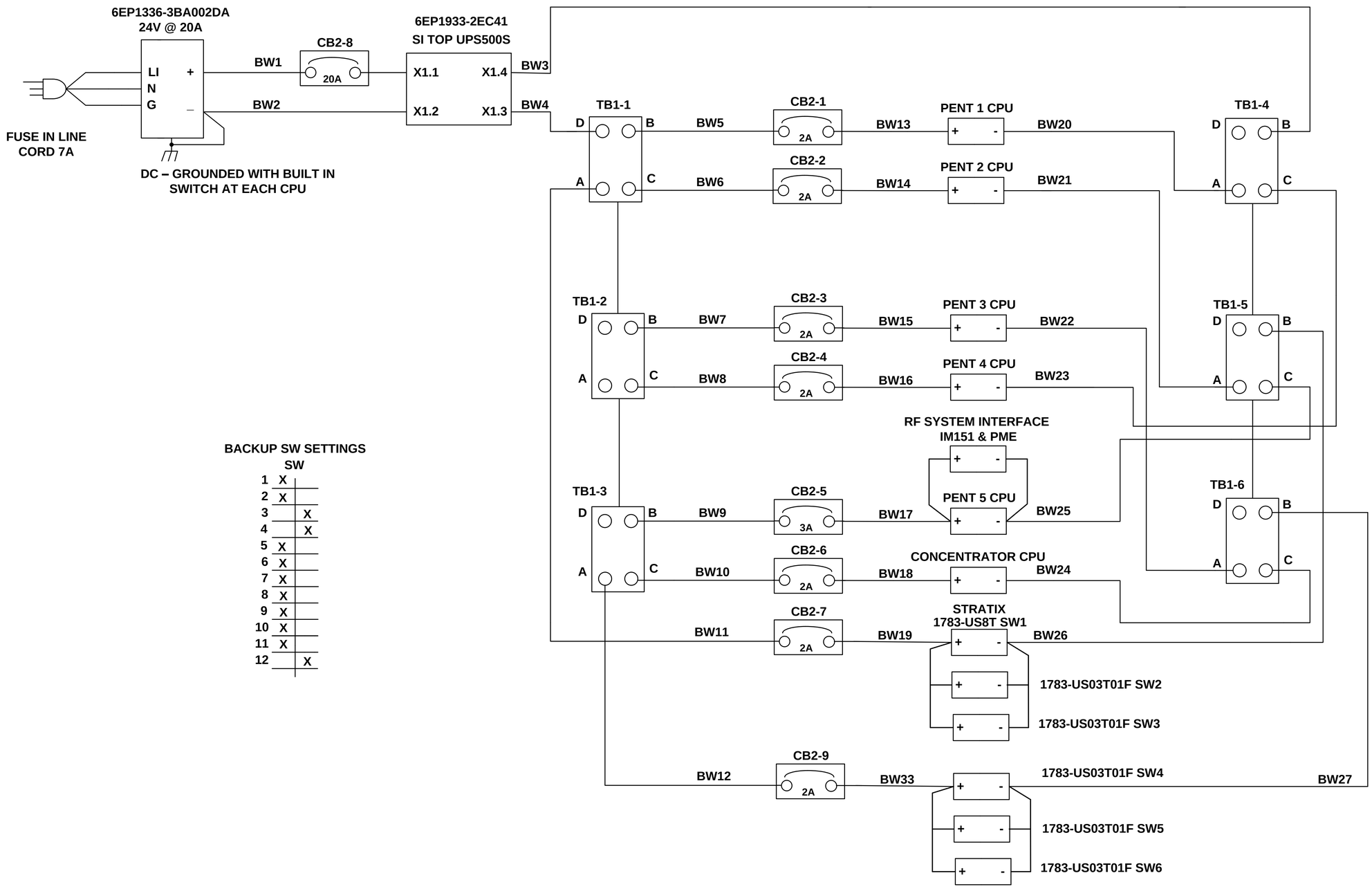

BACKUP SW SETTINGS

	SW	
1	X	
2	X	
3		X
4		X
5	X	
6	X	
7	X	
8	X	
9	X	
10	X	
11	X	
12		X

LT-EL-BL-EI-PPS-0101-91

LT-EL-BL-EI	LT-EL-BL-EI-PPS-0101-91	B
DRAWING DIRECTORY	DRAWING NUMBER	REV
COMPUTER REPRODUCIBLE	SCALE: N/A	SHEET 2 OF 5

REV	DESCRIPTION	BY	DATE	CHK	APP
	SEE SHEET 1				

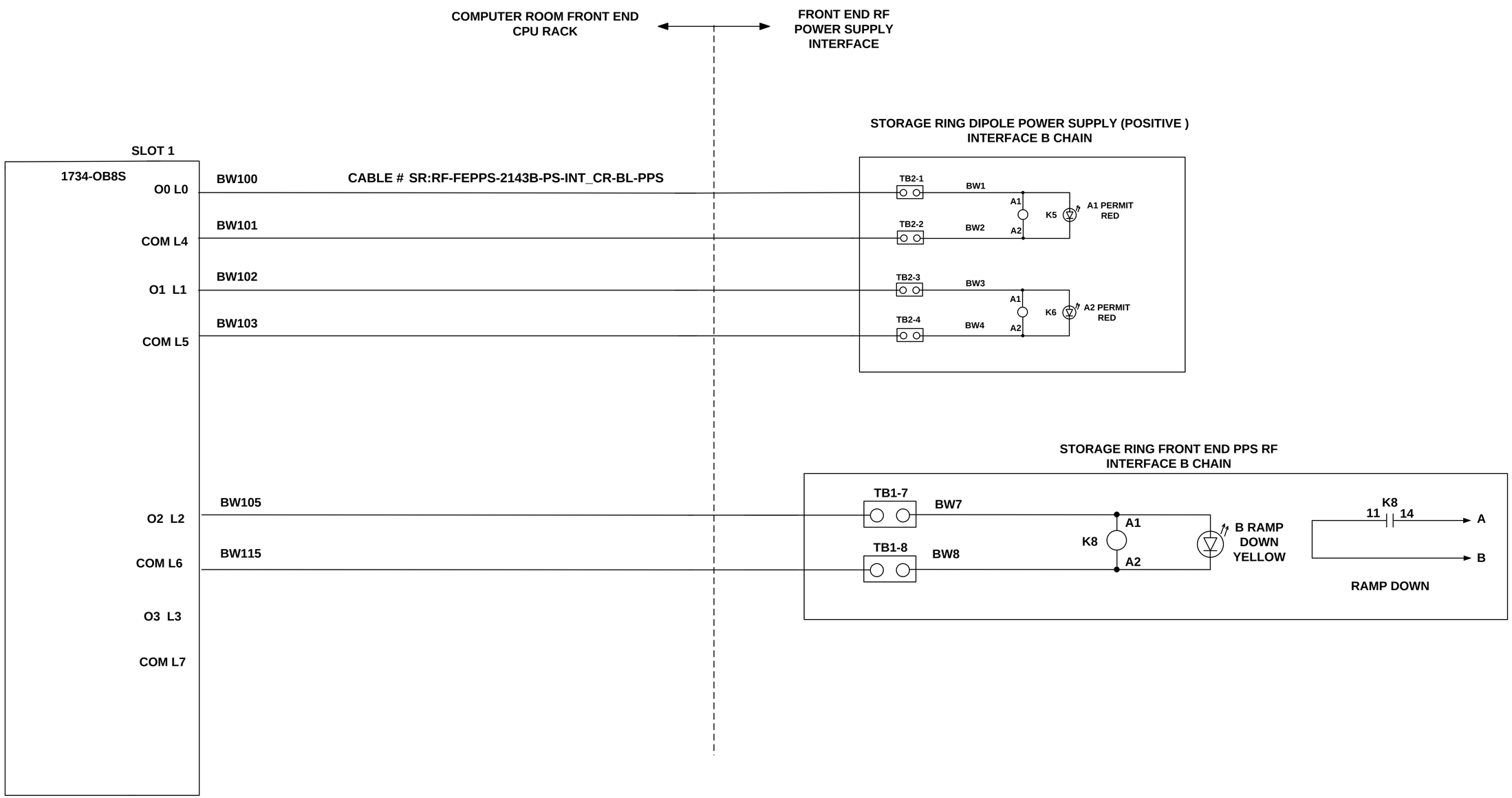

B

LT-EL-BL-EI	LT-EL-BL-EI-PPS-0101-91	B
DRAWING DIRECTORY	DRAWING NUMBER	REV

COMPUTER REPRODUCIBLE | SCALE: N/A | SHEET 3 OF 5

LT-EL-BL-EI-PPS-0101-91

REV	DESCRIPTION	BY	DATE	CHK	APP
	SEE SHEET 1				

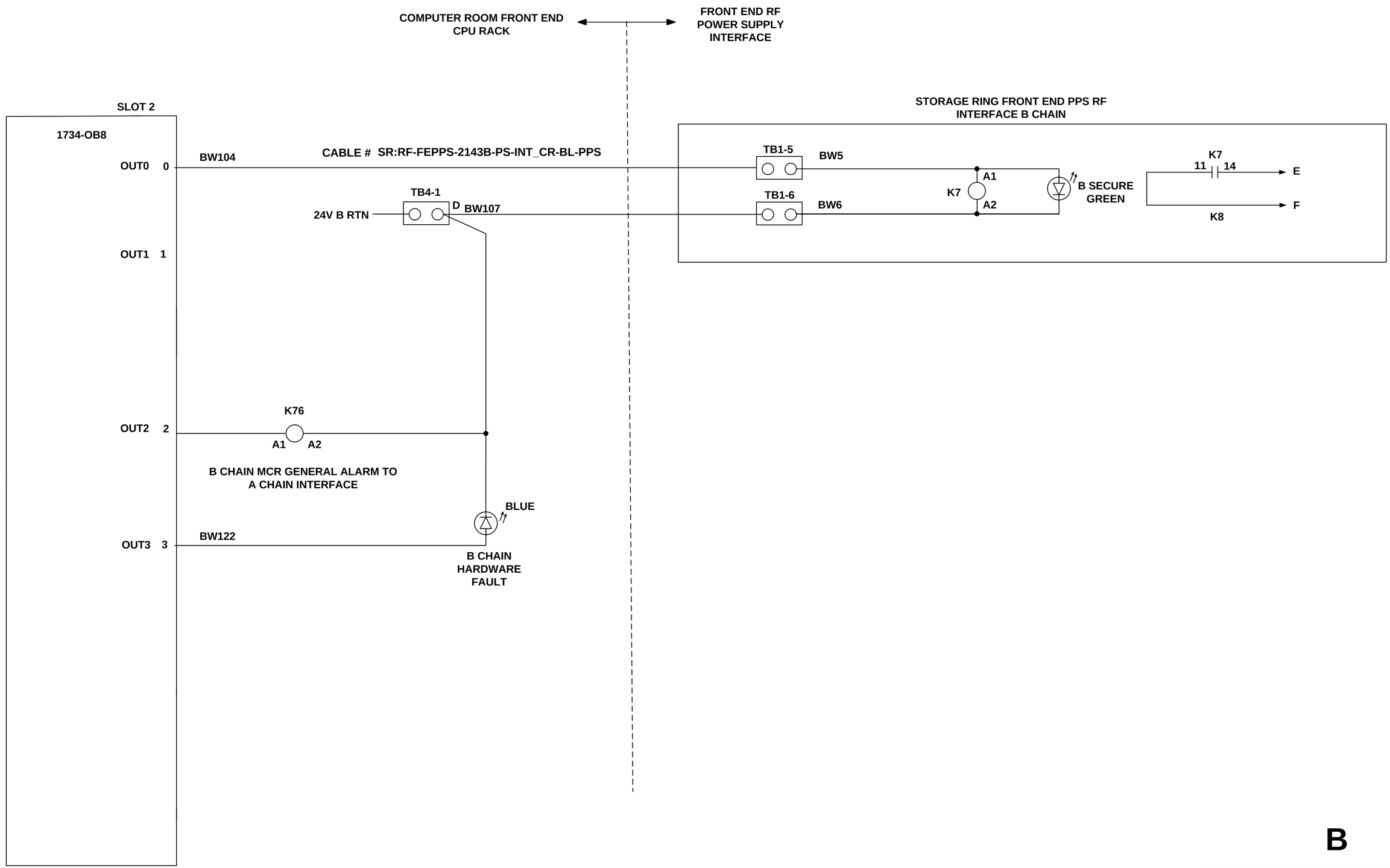

B

LT-EL-BL-EI	LT-EL-BL-EI-PPS-0101-91	B
DRAWING DIRECTORY	DRAWING NUMBER	REV.

COMPUTER REPRODUCIBLE | SCALE: N/A | SHEET 4 OF 5

LT-EL-BL-EI-PPS-0101-91

REV	DESCRIPTION	BY	DATE	CHK	APP
	SEE SHEET 1				

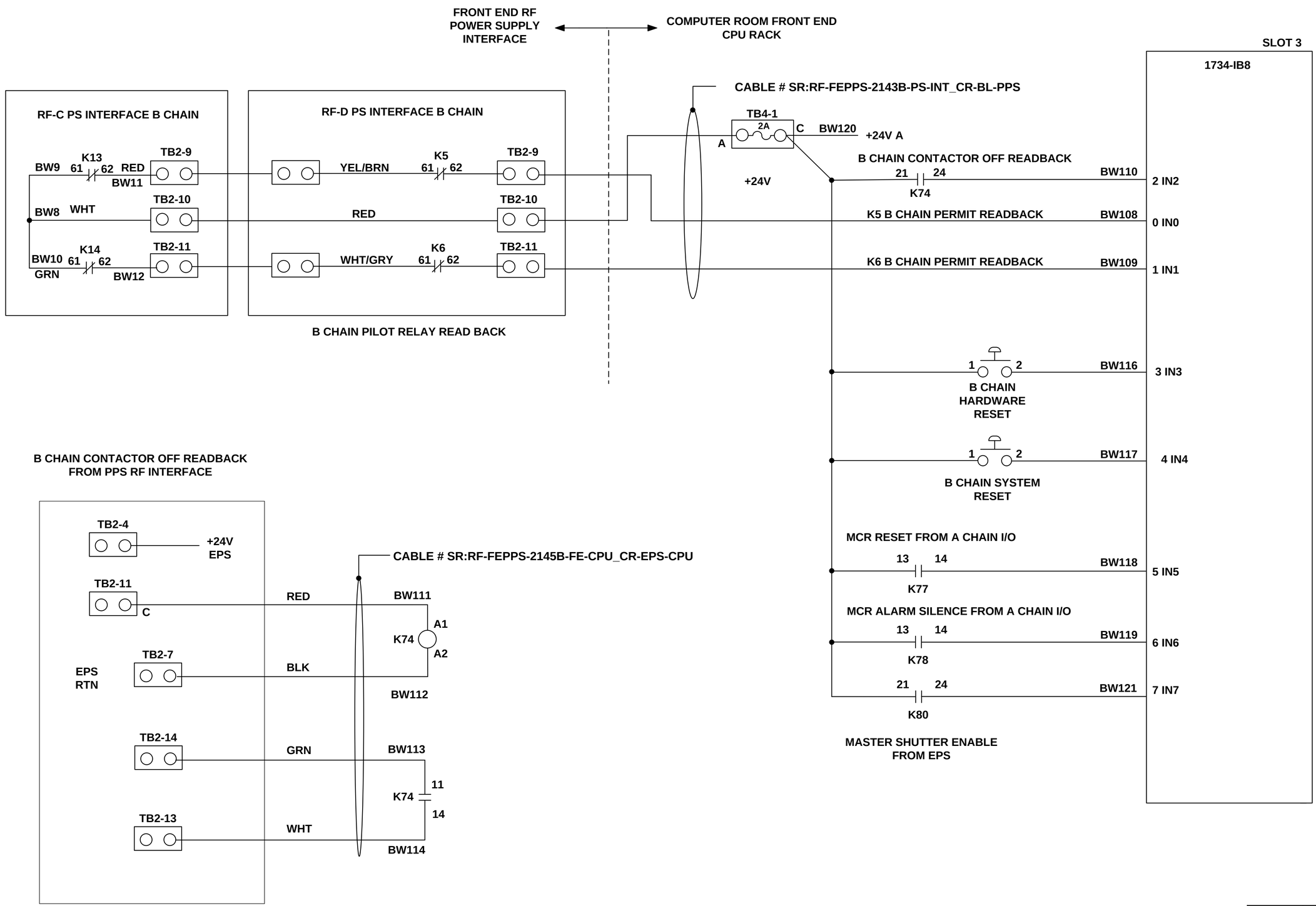

B

LT-EL-BL-EI (DRAWING DIRECTORY)	LT-EL-BL-EI-PPS-0101-91 (DRAWING NUMBER)	B (REV)
COMPUTER REPRODUCIBLE	SCALE: N/A	SHEET 5 OF 5

LT-EL-BL-EI-PPS-0101-91

REV	DESCRIPTION	DATE	BY	CHECKED	APP
A	INITIAL RELEASE	9/08/2014	SEJ	JM	SB
B	REVISED PER ECN LT-ECN-015-1257	7-29-15	CG	JM	SB
C	REVISED PER ECN LT-ECN-016-1373	12/03/2016	SEJ	JM	SB
D	REVISED PER ECN LT-ECN-016-1493	12/03/2016	SEJ	JM	SB
E	REVISED PER ECN LT-ECN-016-1606	9/08/2014	SEJ	JM	SB
F	REVISED PER ECN LT-ECN-017-1728	12/14/2016	SEJ	JM	SB

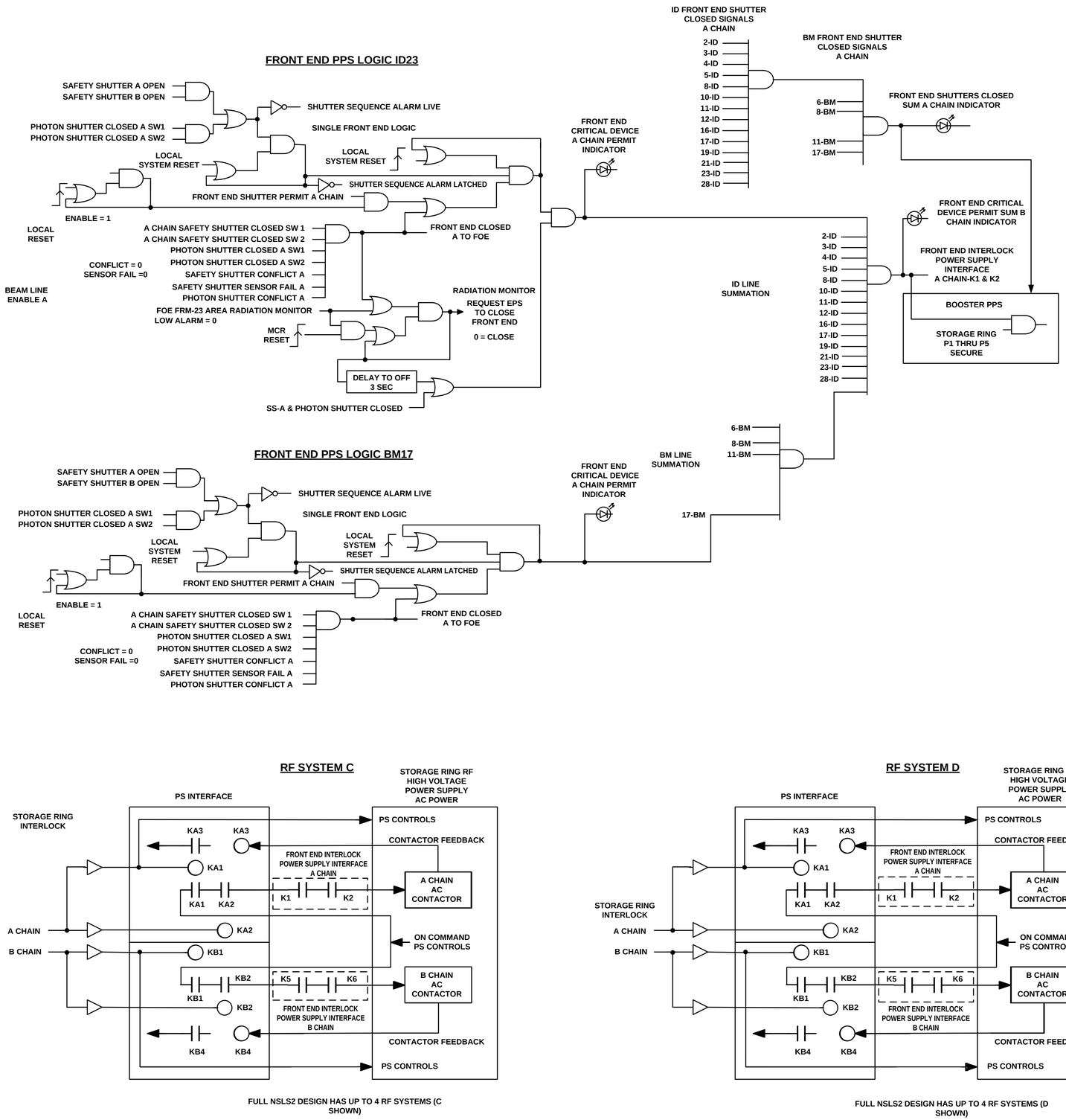

BROOKHAVEN NATIONAL LABORATORY

BROOKHAVEN NATIONAL LABORATORY
BROOKHAVEN SCIENCE ASSOCIATES
UPTON, NEW YORK 11973
Exploring Life's Mysteries, Protecting its Future

NSLSII NATIONAL SYNCHROTRON LIGHT SOURCE II

UNLESS OTHERWISE SPECIFIED
INTEGER TOLERANCES ± .06
DECIMAL TOLERANCES .X ± .030 .XX ± .015 .XXX ± .010
ANGULAR TOLERANCE ± 0.5°
UNSPECIFIED RADII .02 MAX
125 FINISH — BREAK SHARP CORNERS AND EDGES MAX .03 MIN .005

UNLESS OTHERWISE SPECIFIED DIMENSIONS ARE IN INCHES
DIMENSIONS IN [ ] ARE MILLIMETERS EQUIV. FOR REF. ONLY
INTERPRET DRAWING AS PER ANSI Y14.5 OR Y32.2

ESH&Q RISK LEVEL A-1
OUTSTANDING ECN'S

		DATE
DRWN BY	S. JARZABKOWSKI	9/08/2014
CHK BY	J. MALLEY	9/08/2014
ENG APP	S. BUDA	9/08/2014
SUPV APP	G. GANETIS	9/10/2014
QA APP	E. CHESWICK	9/08/2014
ESH APP	R. LEE	9/10/2014

JOB NUMBER | USED ON DWG. NO.

WIRING DIAGRAM, FRONT END PPS SYSTEM LOGIC

DRAWING DIRECTORY: LT-EL-BL-EI
DRAWING NUMBER: LT-EL-BL-EI-PPS-0101-92
REV: F

WBS # 1.03.06.01.03 | SCALE: N/A | SHEET 1 OF 3

LT-EL-BL-EI-PPS-0101-92

REV	DESCRIPTION	DATE	BY	CHECKED	APP
	SEE SHEET 1				

FRONT END PPS LOGIC ID23

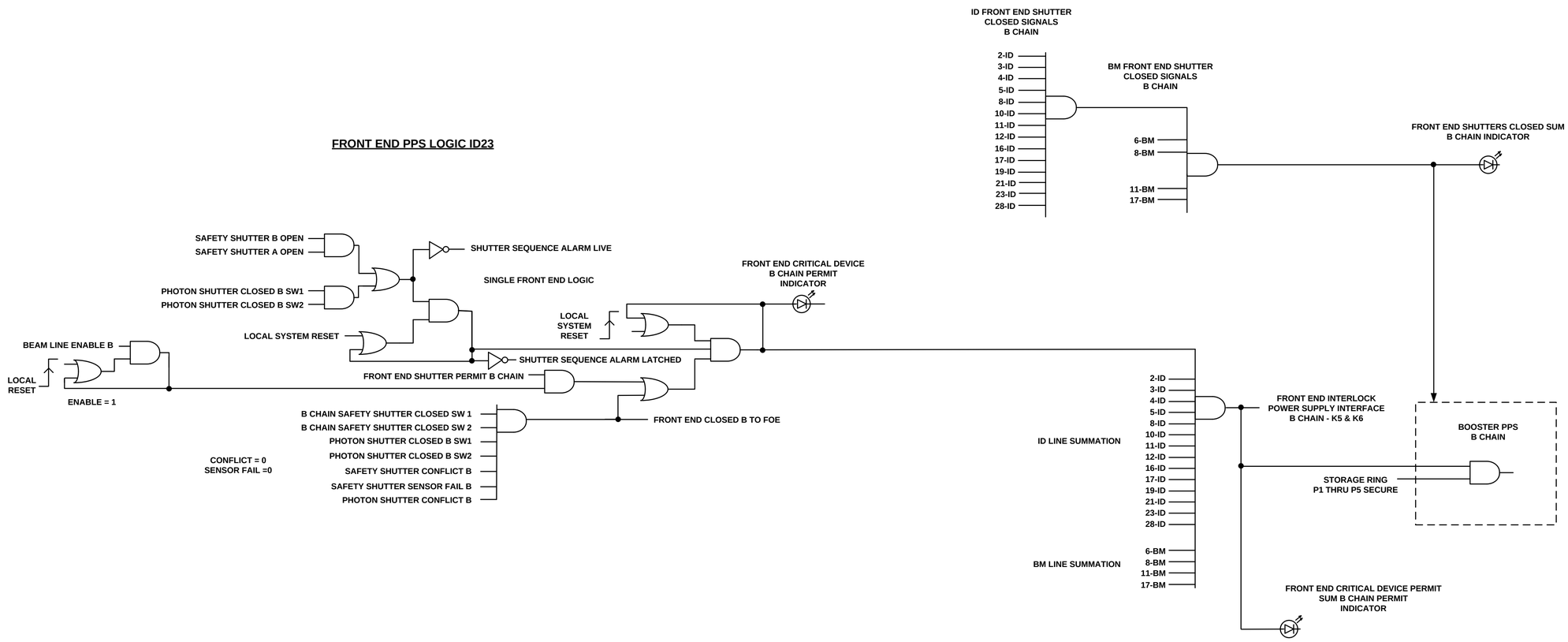

LT-EL-BL-EI	LT-EL-BL-EI-PPS-0101-92	F
DRAWING DIRECTORY	DRAWING NUMBER	REV

COMPUTER REPRODUCIBLE | SCALE: N/A | SHEET 2 OF 3

LT-EL-BL-EI-PPS-0101-92

REV	DESCRIPTION	DATE	BY	CHECKED	APP
	SEE SHEET 1				

A CHAIN

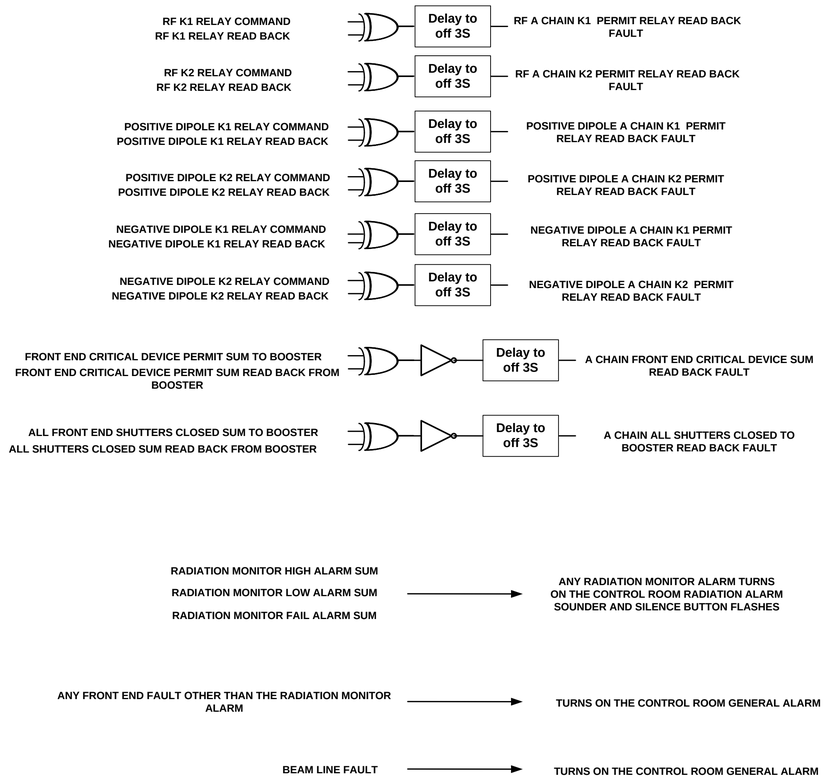

B CHAIN

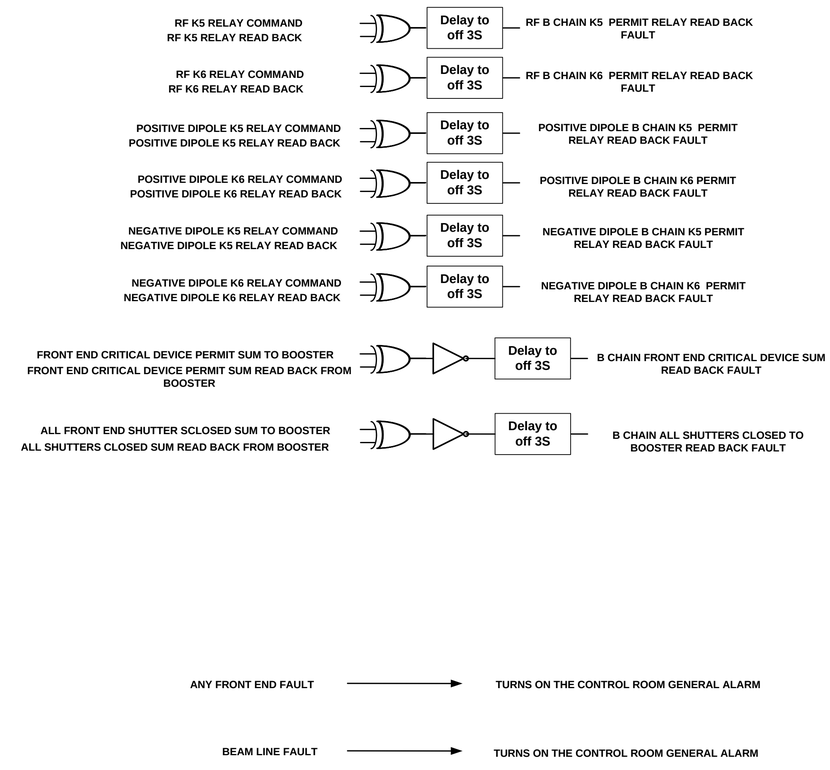

LT-EL-BL-EI-PPS-0101-92

LT-EL-BL-EI (DRAWING DIRECTORY)	LT-EL-BL-EI-PPS-0101-92 (DRAWING NUMBER)	F (REV)
COMPUTER REPRODUCIBLE	SCALE: N/A	SHEET 3 OF 3

FIRMWARE/SOFTWARE/PROGRAMMING LOGIC

DESCRIPTION:

7-BM A CHAIN BEAMLINE PPS PLC PROGRAM

PROGRAM	**SIEMENS STEP 7**	
VERSION	**VERSION 5.5 + SP4**	
DEVICE	**SIEMENS CPU319F-3-PN/DP**	
OPERATING SYSTEM	**WINDOWS**	
PROGRAMMING LANGUAGE	**LADDER LOGIC**	
FILE	**NSLS II Beamline_BM7 REV A**	
SAFETY SIGNATURE	**CB76139A**	

REV	DESCRIPTION	BY	DATE	CHK	APP
A	INITIAL RELEASE	EO	07/28/17	MP	SB

LT-EL-BL-EI-PPS-2070-70

BROOKHAVEN NATIONAL LABORATORY

BROOKHAVEN NATIONAL LABORATORY
BROOKHAVEN SCIENCE ASSOCIATES
UPTON, NEW YORK 11973
Exploring Life's Mysteries, Protecting its Future

NSLS II
NATIONAL SYNCHROTRON LIGHT SOURCE II

UNLESS OTHERWISE SPECIFIED
INTEGER TOLERANCES
± .06
DECIMAL TOLERANCES
.X ± .030
.XX ± .015
.XXX ± .010
ANGULAR TOLERANCE ± 0.5°
UNSPECIFIED RADII .02 MAX
125 BREAK SHARP CORNERS AND EDGES
FINISH MAX .03 MIN .005

UNLESS OTHERWISE SPECIFIED
DIMENSIONS ARE IN INCHES
DIMENSIONS IN [*.**] ARE
MILLIMETERS EQUIV. FOR REF. ONLY

ESH&Q RISK LEVEL A-1

INTERPRET DRAWING AS PER ANSI Y14.5 OR Y32.2

OUTSTANDING ECN'S

		DATE
DRWN BY	S.BUDA	07/14/16
CHK BY	M.PFEFFER	07/14/16
ENG APP	S.BUDA	07/14/16
SUPV APP	G.GANETIS	07/28/16
QA APP	E.CHESWICK	07/28/16
ESH APP	B.LEE	07/28/16

PROGRAMMABLE LOGIC,
A CHAIN BEAMLINE PPS PLC PROGRAM (7-BM)

LT-EL-BL-EI — DRAWING DIRECTORY
LT-EL-BL-EI-PPS-2070-70 — DRAWING NUMBER
A — REV

COMPUTER REPRODUCIBLE | SCALE: N/A | SHEET 1 OF 1

JOB NUMBER | USED ON DWG. NO.

FIRMWARE/SOFTWARE/PROGRAMMING LOGIC

DESCRIPTION:

7-BM B CHAIN BEAMLINE PPS PLC PROGRAM

PROGRAM	**RS LOGIX 5000**	
VERSION	**20.03**	
DEVICE	**ALLEN BRADLEY 1768 L43S SAFETY PLC**	
OPERATING SYSTEM	**WINDOWS**	
PROGRAMMING METHOD	**LADDER**	
FILE	**BM7_B_PLC_20170612.ACD**	

REV	DESCRIPTION	BY	DATE	CHK	APP
A	INITIAL RELEASE	SX	06/28/17	MP	SB

LT-EL-BL-EI-PPS-2070-71

BROOKHAVEN NATIONAL LABORATORY

BROOKHAVEN NATIONAL LABORATORY
BROOKHAVEN SCIENCE ASSOCIATES
UPTON, NEW YORK 11973
Exploring Life's Mysteries, Protecting its Future

NSLS II
NATIONAL SYNCHROTRON LIGHT SOURCE II

UNLESS OTHERWISE SPECIFIED
INTEGER TOLERANCES
± .06
DECIMAL TOLERANCES
.X ± .030
.XX ± .015
.XXX ± .010
ANGULAR TOLERANCE ± 0.5°
UNSPECIFIED RADII .02 MAX
125 BREAK SHARP CORNERS AND EDGES
FINISH MAX .03 MIN .005

UNLESS OTHERWISE SPECIFIED DIMENSIONS ARE IN INCHES DIMENSIONS IN [*.**] ARE MILLIMETERS EQUIV. FOR REF. ONLY

ESH&Q RISK LEVEL A-1

INTERPRET DRAWING AS PER ANSI Y14.5 OR Y32.2

		DATE	OUTSTANDING ECN'S
DRWN BY	S.Xin	06/28/17	
CHK BY	M.PFEFFER	06/28/17	
ENG APP	S.BUDA	06/28/17	
SUPV APP	G.GANETIS	07/06/17	
QA APP	E.CHESWICK	06/29/17	
ESH APP	B.LEE	06/29/17	

PROGRAMMABLE LOGIC

NSLS-II- B CHAIN BEAMLINE PPS PLC PROGRAM (7-BM)

LT-EL-BL-IN (DRAWING DIRECTORY)	LT-EL-BL-EI-PPS-2070-71 (DRAWING NUMBER)	A (REV)

COMPUTER REPRODUCIBLE | SCALE: N/A | SHEET 1 OF 1

JOB NUMBER	USED ON DWG. NO.

REV	DESCRIPTION	DATE	BY	CHECKED	APP
A	INITIAL RELEASE	6/9/2017	SEJ	JM	SB

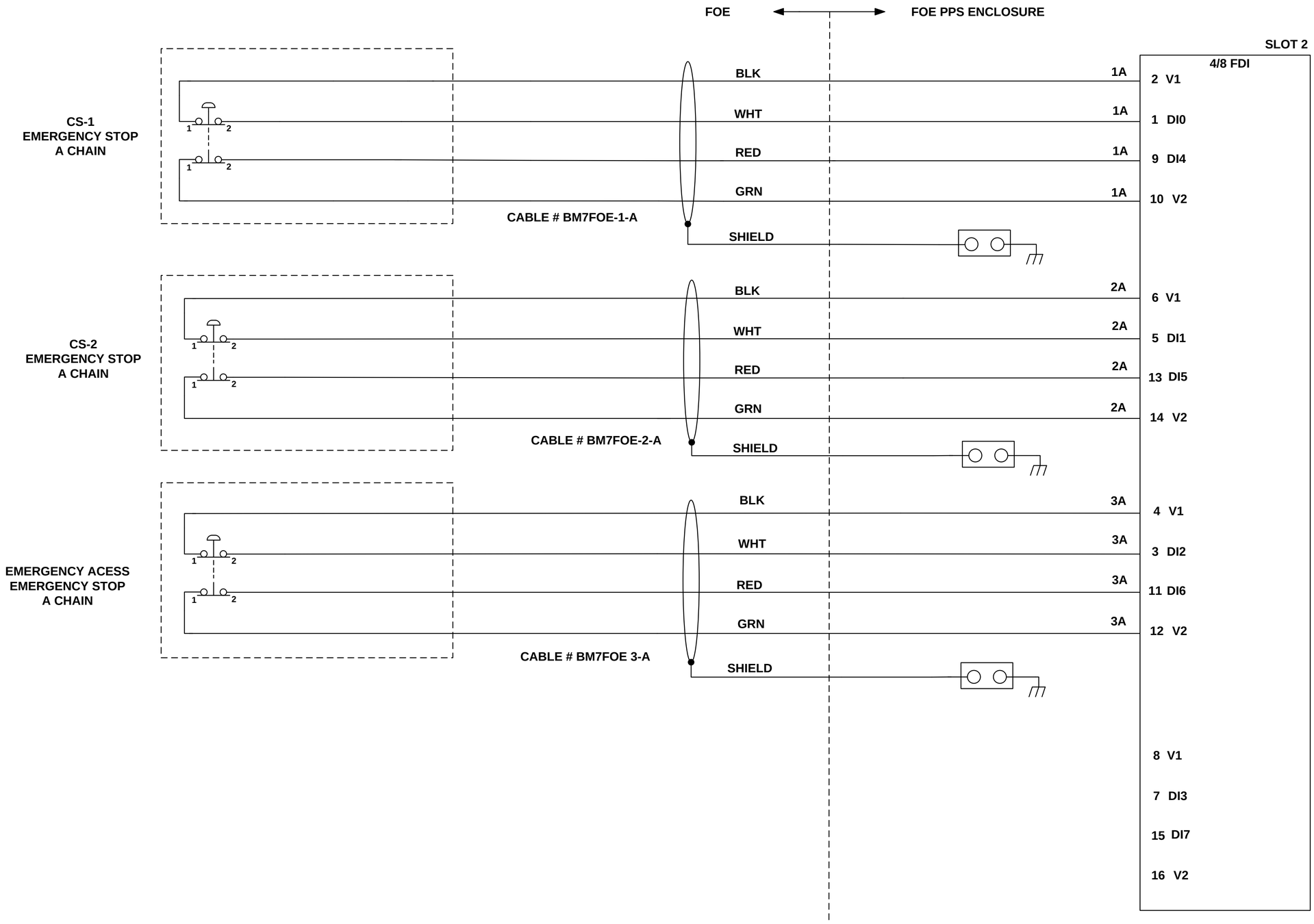

BROOKHAVEN NATIONAL LABORATORY

BROOKHAVEN NATIONAL LABORATORY
BROOKHAVEN SCIENCE ASSOCIATES
UPTON, NEW YORK 11973
Exploring Life's Mysteries, Protecting its Future

NSLS II NATIONAL SYNCHROTRON LIGHT SOURCE II

UNLESS OTHERWISE SPECIFIED
INTEGER TOLERANCES ± .06
DECIMAL TOLERANCES
.X ± .030
.XX ± .015
.XXX ± .010
ANGULAR TOLERANCE ± 0.5°
UNSPECIFIED RADII .02 MAX
125 BREAK SHARP CORNERS AND EDGES
FINISH MAX .03 MIN .005

UNLESS OTHERWISE SPECIFIED DIMENSIONS ARE IN INCHES DIMENSIONS IN [ ] ARE MILLIMETERS EQUIV. FOR REF. ONLY
INTERPRET DRAWING AS PER ANSI Y14.5 OR Y32.2

ESH&Q RISK LEVEL A-1
OUTSTANDING ECN'S

		DATE
DRWN BY	S. JARZABKOWSKI	6/9/2017
CHK BY	J.MALLEY	6/14/2017
ENG APP	S. XIN	6/13/2017
SUPV APP	G. GANETIS	6/21/2017
QA APP	E.CHESWICK	6/14/2017
ESH APP	R. LEE	6/14/2017

WIRING DIAGRAM, 7-BM-FOE (QAS-FOE) A CHAIN AND B CHAIN

DRAWING DIRECTORY	DRAWING NUMBER	REV
LT-EL-BL-EI	LT-EL-BL-EI-PPS-2070-91	A

COMPUTER REPRODUCABLE | SCALE: N/A | SHEET 1 OF 35

JOB NUMBER | USED ON DWG. NO.

LT-EL-BL-EI-PPS-2070-91

REV	DESCRIPTION	DATE	BY	CHECKED	APP
	SEE SHEET 1				

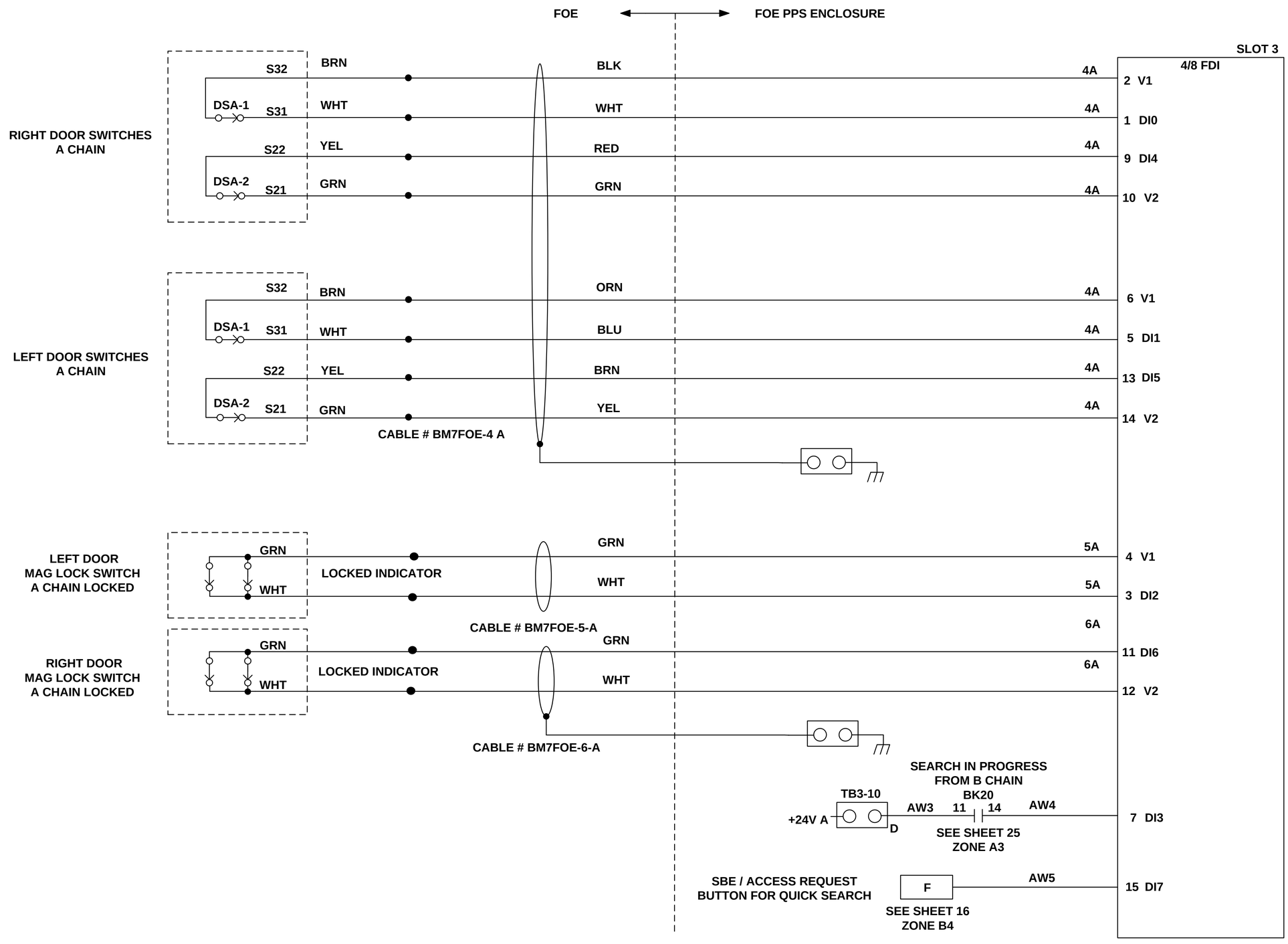

A

LT-EL-BL-EI (DRAWING DIRECTORY)	LT-EL-BL-EI-PPS-2070-91 (DRAWING NUMBER)	A (REV)
COMPUTER REPRODUCABLE	SCALE: N/A	SHEET 2 OF 35

LT-EL-BL-EI-PPS-2070-91

REV	DESCRIPTION	DATE	BY	CHECKED	APP
	SEE SHEET 1				

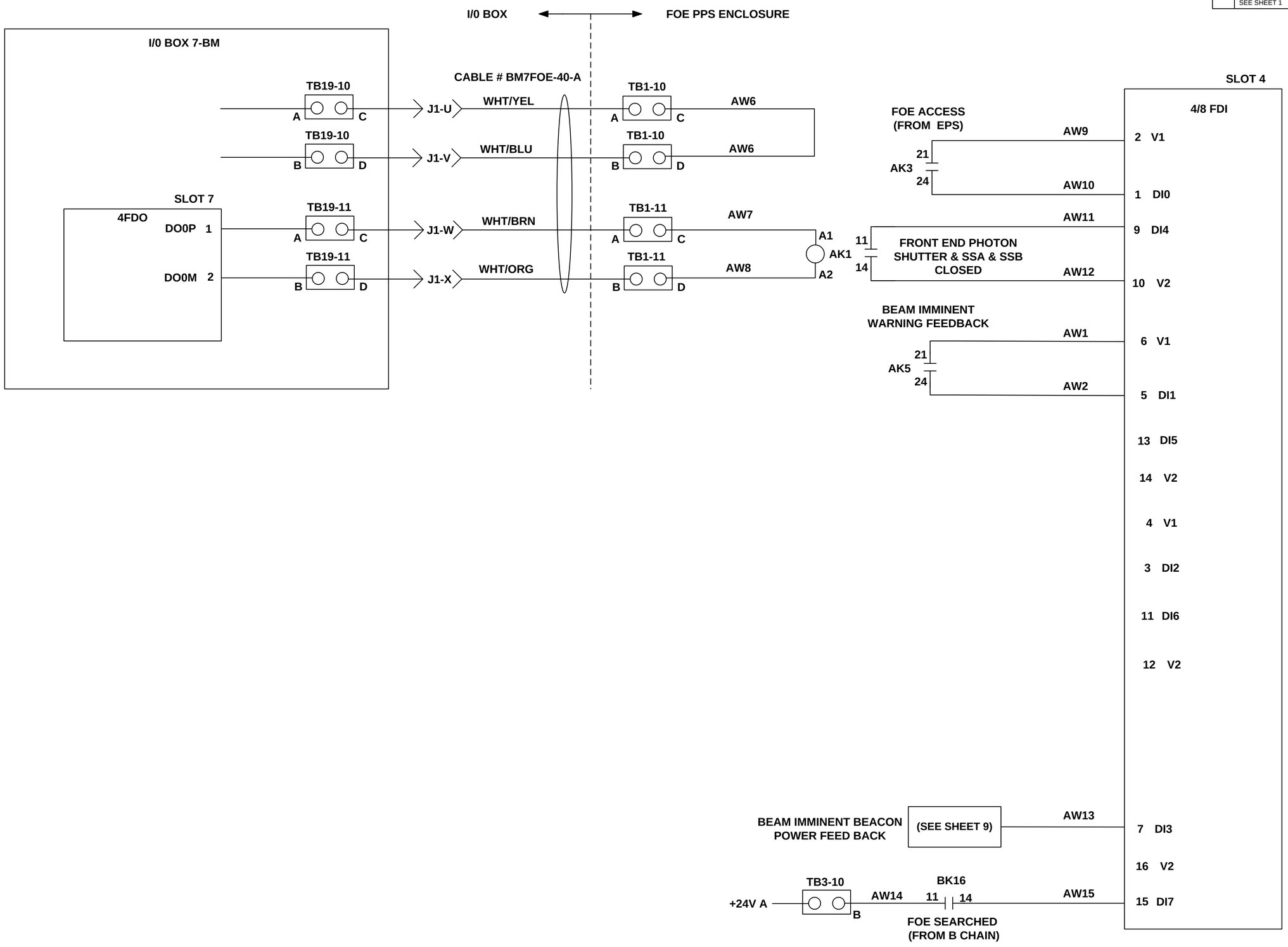

A

LT-EL-BL-EI (DRAWING DIRECTORY)	LT-EL-BL-EI-PPS-2070-91 (DRAWING NUMBER)	A (REV)
COMPUTER REPRODUCABLE	SCALE: N/A	SHEET 3 OF 35

LT-EL-BL-EI-PPS-2070-91

REV	DESCRIPTION	DATE	BY	CHECKED	APP
	SEE SHEET 1				

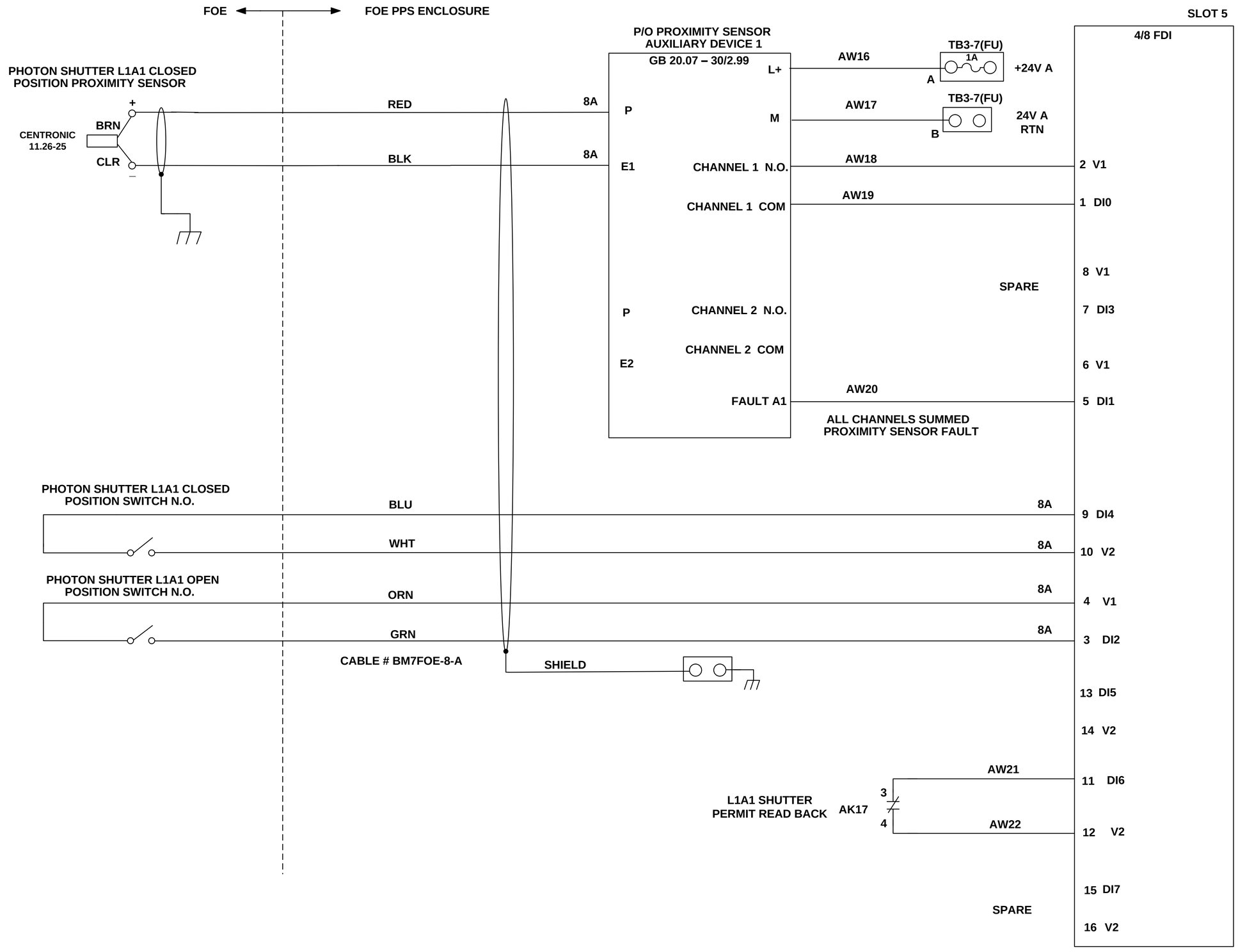

A

LT-EL-BL-EI	LT-EL-BL-EI-PPS-2070-91	A
DRAWING DIRECTORY	DRAWING NUMBER	REV

COMPUTER REPRODUCABLE | SCALE: N/A | SHEET 4 OF 35

LT-EL-BL-EI-PPS-2070-91

REV	DESCRIPTION	DATE	BY	CHECKED	APP
	SEE SHEET 1				

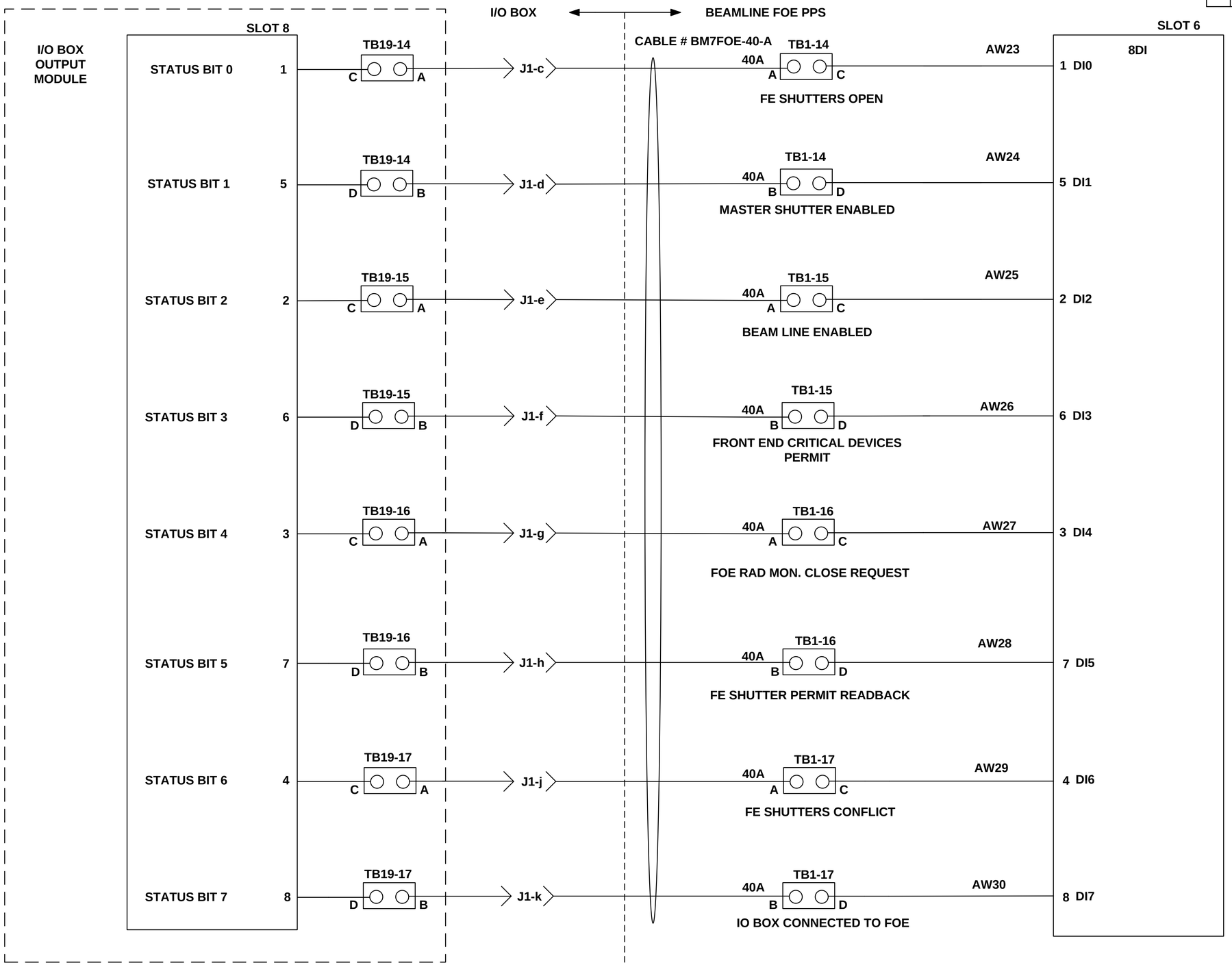

A

LT-EL-BL-EI (DRAWING DIRECTORY)	LT-EL-BL-EI-PPS-2070-91 (DRAWING NUMBER)	A (REV)
COMPUTER REPRODUCABLE	SCALE: N/A	SHEET 5 OF 35

LT-EL-BL-EI-PPS-2070-91

REV	DESCRIPTION	DATE	BY	CHECKED	APP
	SEE SHEET 1				

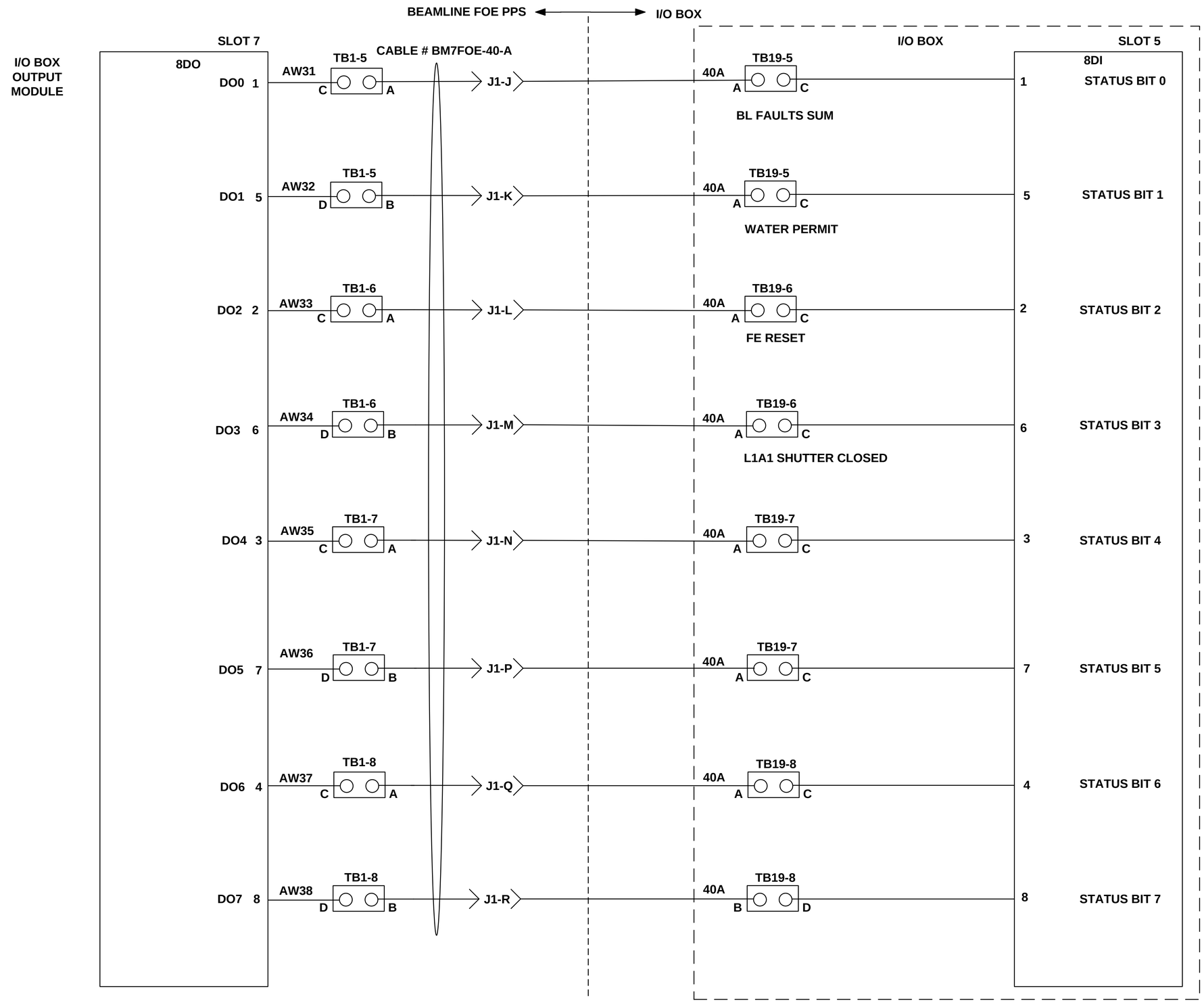

A

LT-EL-BL-EI (DRAWING DIRECTORY)	LT-EL-BL-EI-PPS-2070-91 (DRAWING NUMBER)	A (REV)
COMPUTER REPRODUCABLE	SCALE: N/A	SHEET 6 OF 35

LT-EL-BL-EI-PPS-2070-91

REV	DESCRIPTION	DATE	BY	CHECKED	APP
	SEE SHEET 1				

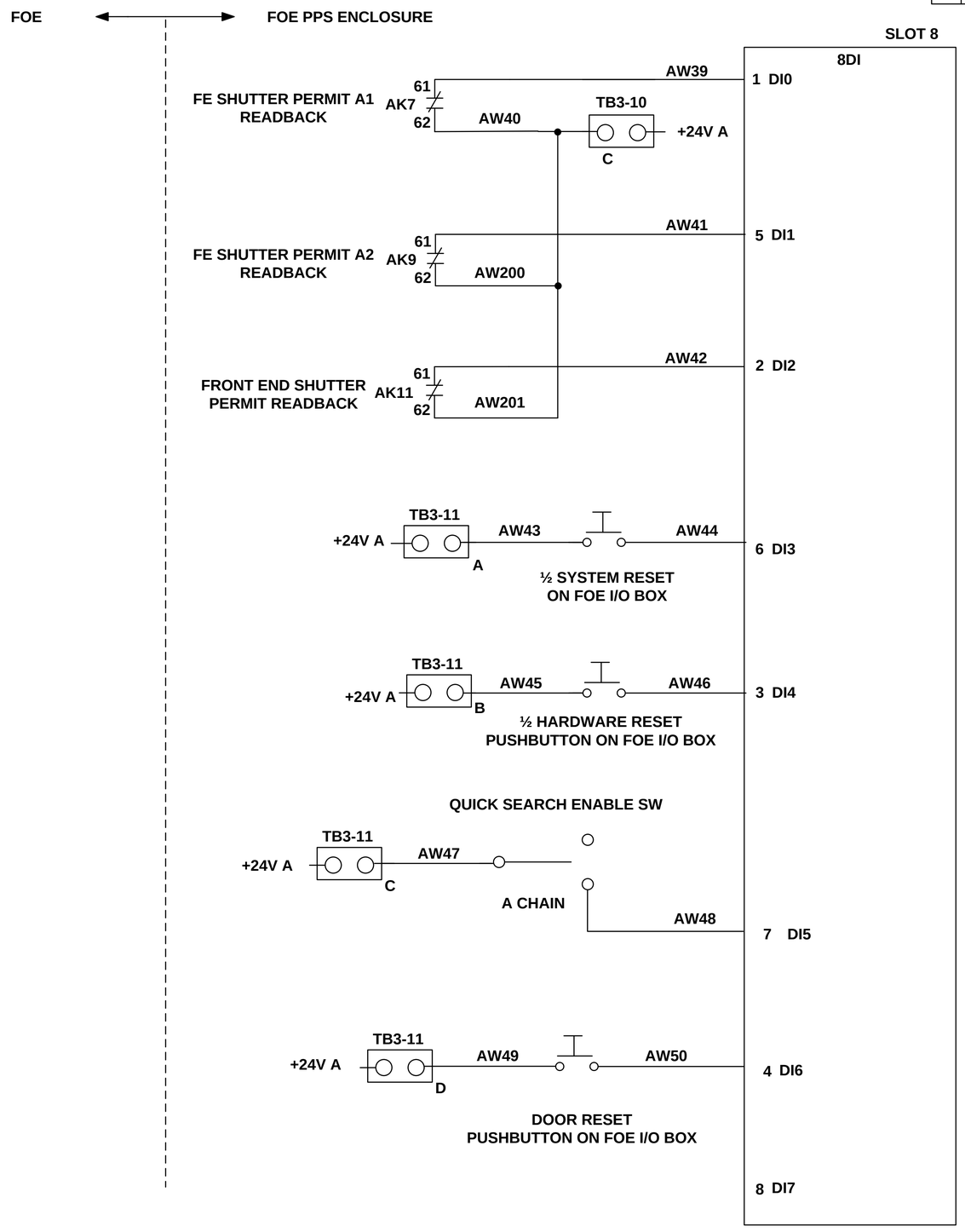

A

LT-EL-BL-EI DRAWING DIRECTORY	LT-EL-BL-EI-PPS-2070-91 DRAWING NUMBER	A REV
COMPUTER REPRODUCABLE	SCALE: N/A	SHEET 7 OF 35

LT-EL-BL-EI-PPS-2070-91

REV	DESCRIPTION	DATE	BY	CHECKED	APP
	SEE SHEET 1				

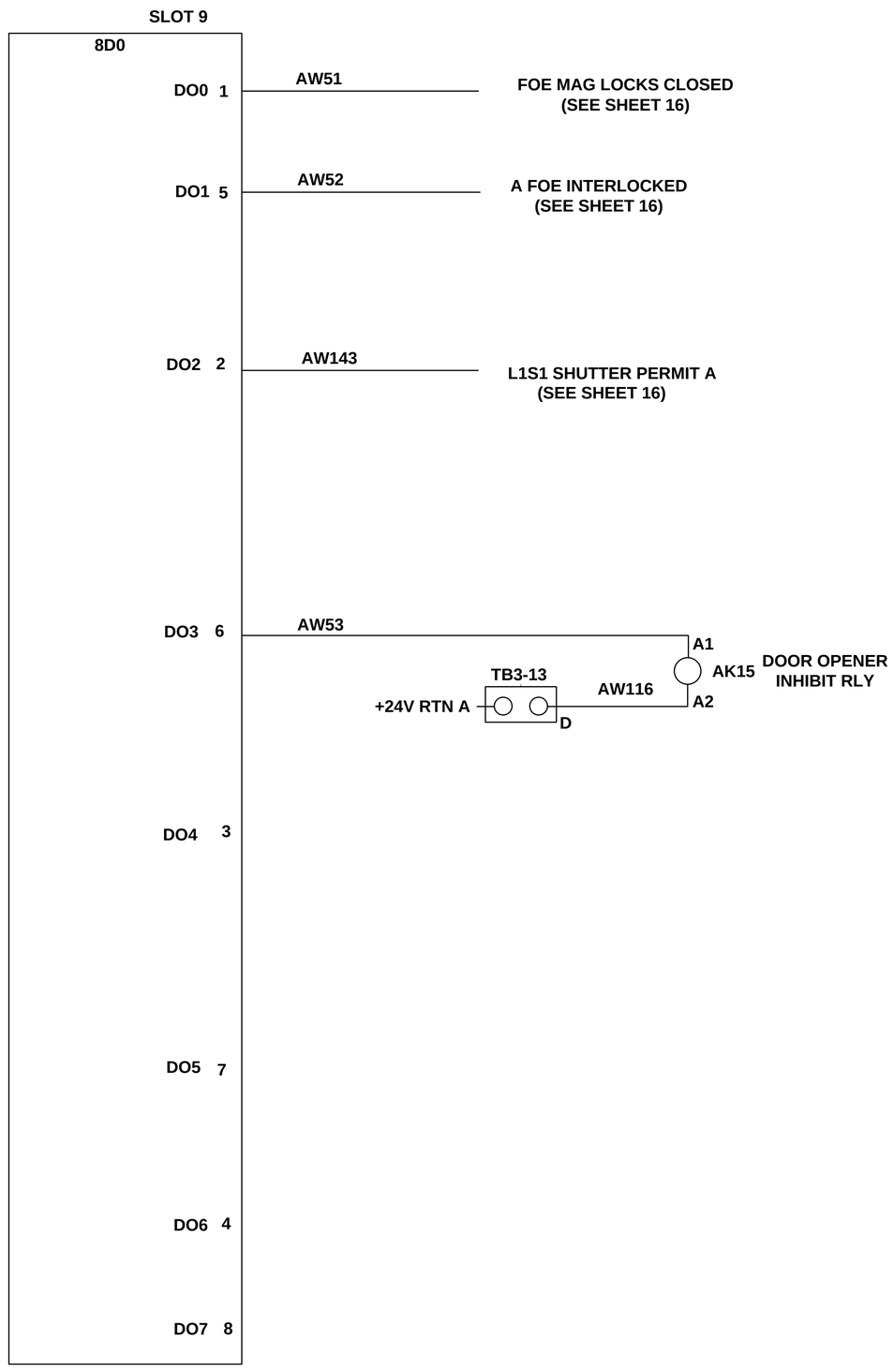

A

LT-EL-BL-EI DRAWING DIRECTORY	LT-EL-BL-EI-PPS-2070-91 DRAWING NUMBER	A REV
COMPUTER REPRODUCABLE	SCALE: N/A	SHEET 8 OF 35

LT-EL-BL-EI-PPS-2070-91

REV	DESCRIPTION	DATE	BY	CHECKED	APP
	SEE SHEET 1				

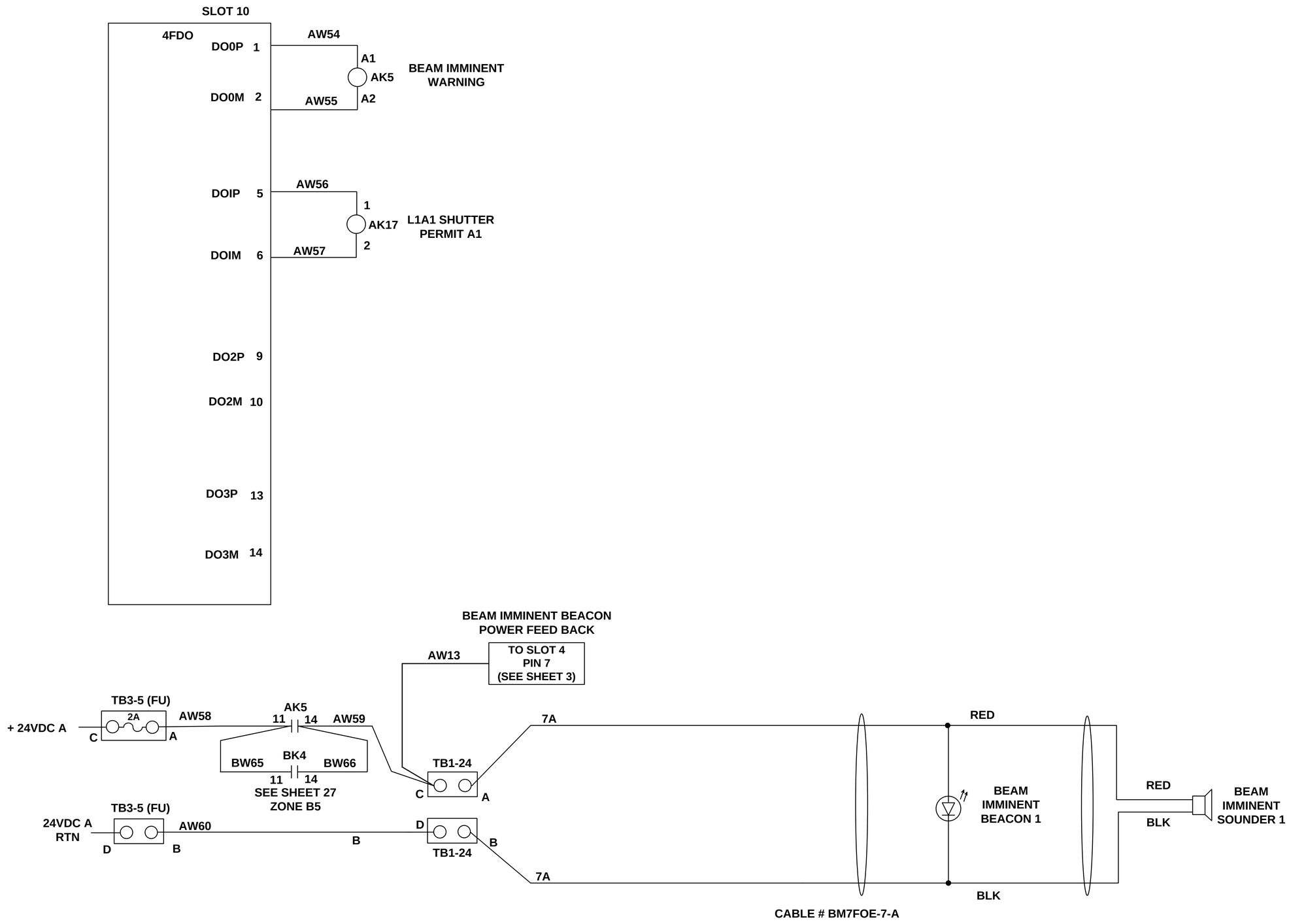

A

LT-EL-BL-EI DRAWING DIRECTORY	LT-EL-BL-EI-PPS-2070-91 DRAWING NUMBER	A REV
COMPUTER REPRODUCABLE	SCALE: N/A	SHEET 9 OF 35

LT-EL-BL-EI-PPS-2070-91

REV	DESCRIPTION	DATE	BY	CHECKED	APP
	SEE SHEET 1				

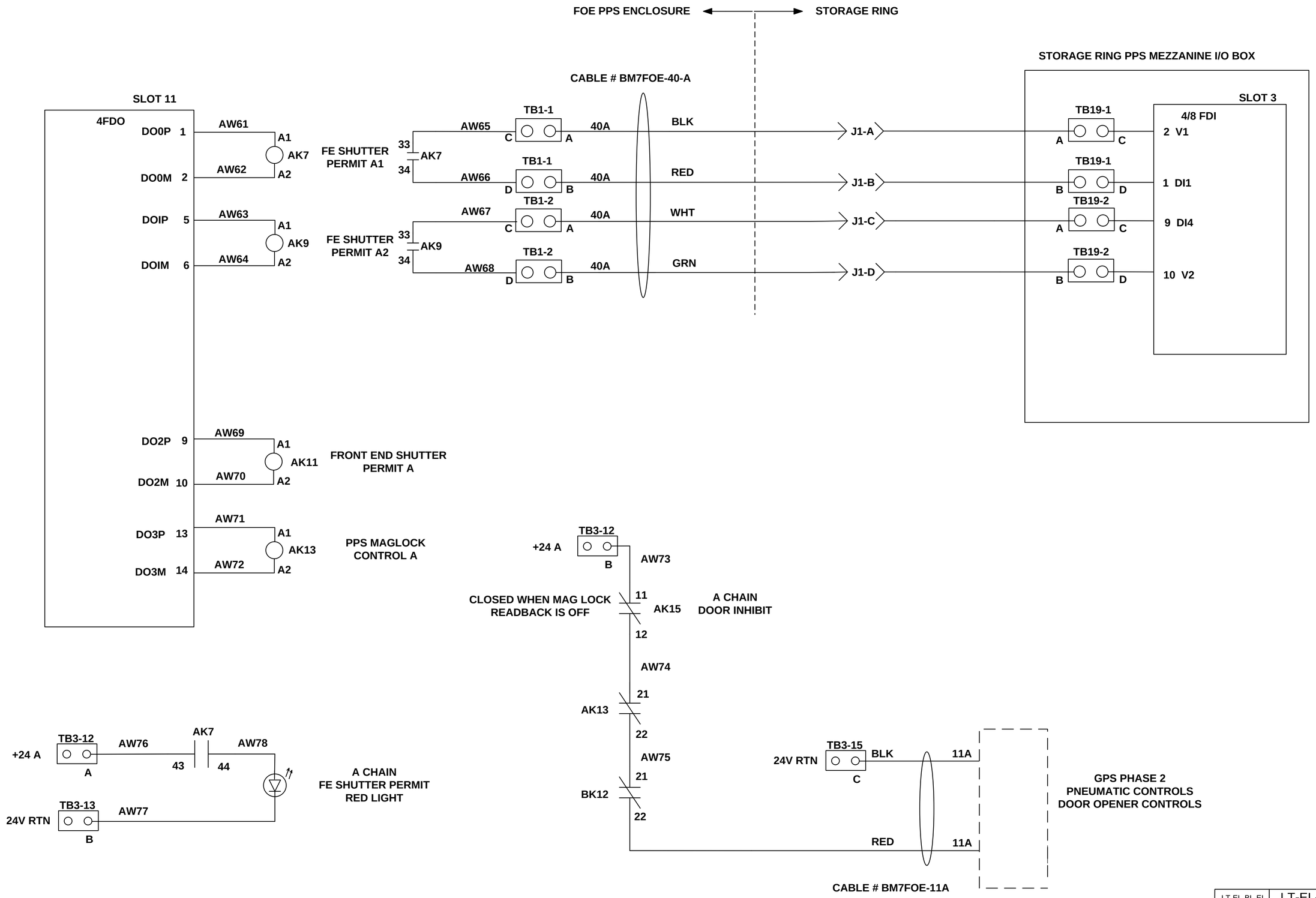

A

LT-EL-BL-EI (DRAWING DIRECTORY)	LT-EL-BL-EI-PPS-2070-91 (DRAWING NUMBER)	A (REV)
COMPUTER REPRODUCABLE	SCALE: N/A	SHEET 10 OF 35

LT-EL-BL-EI-PPS-2070-91

REV	DESCRIPTION	DATE	BY	CHECKED	APP
	SEE SHEET 1				

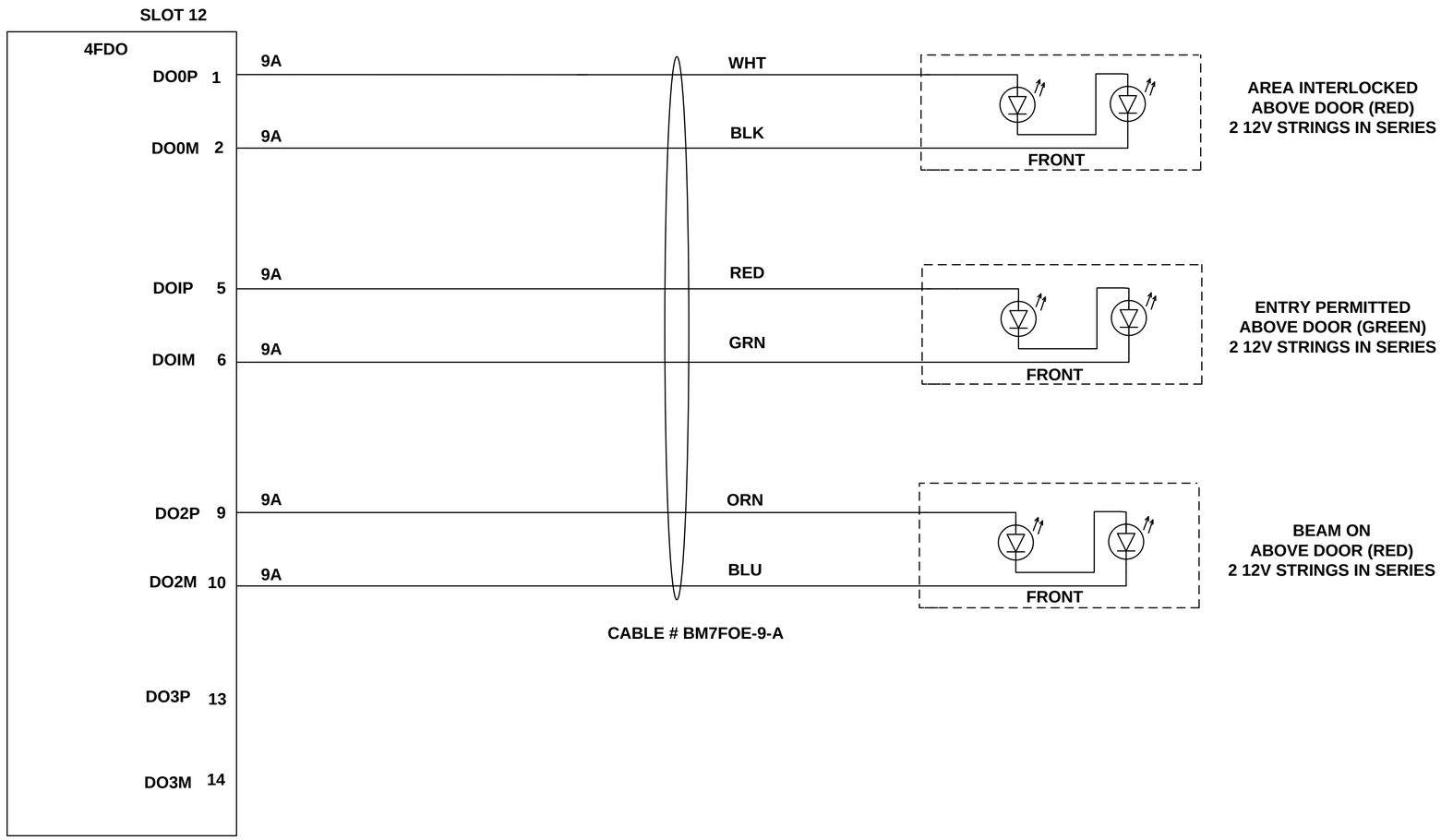

A

LT-EL-BL-EI (DRAWING DIRECTORY)	LT-EL-BL-EI-PPS-2070-91 (DRAWING NUMBER)	A (REV)
COMPUTER REPRODUCABLE	SCALE: N/A	SHEET 11 OF 35

LT-EL-BL-EI-PPS-2070-91

REV	DESCRIPTION	DATE	BY	CHECKED	APP
	SEE SHEET 1				

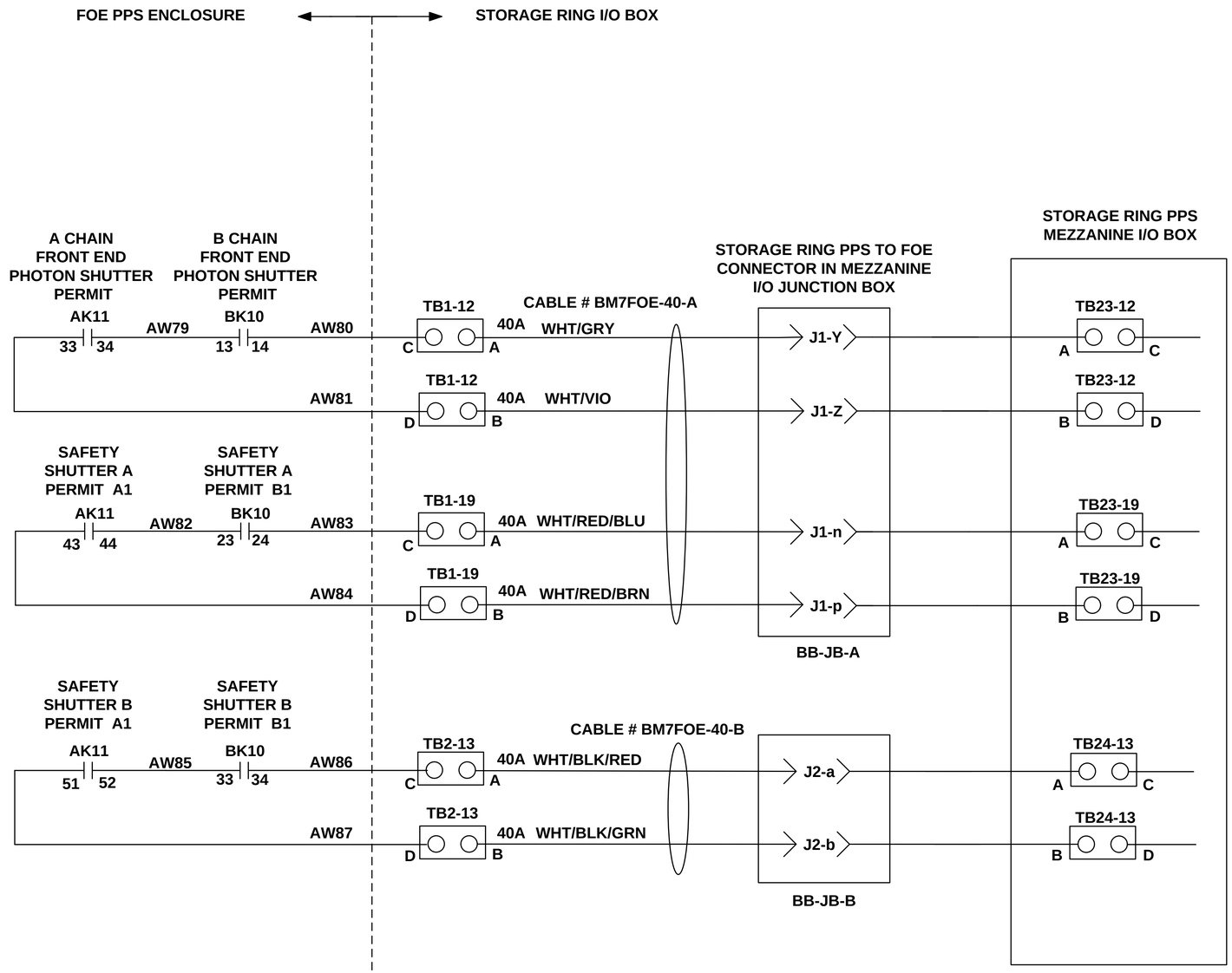

A

LT-EL-BL-EI DRAWING DIRECTORY	LT-EL-BL-EI-PPS-2070-91 DRAWING NUMBER	A REV
COMPUTER REPRODUCABLE	SCALE: N/A	SHEET 12 OF 35

LT-EL-BL-EI-PPS-2070-91

REV	DESCRIPTION	DATE	BY	CHECKED	APP
	SEE SHEET 1				

DOOR MAG LOCK

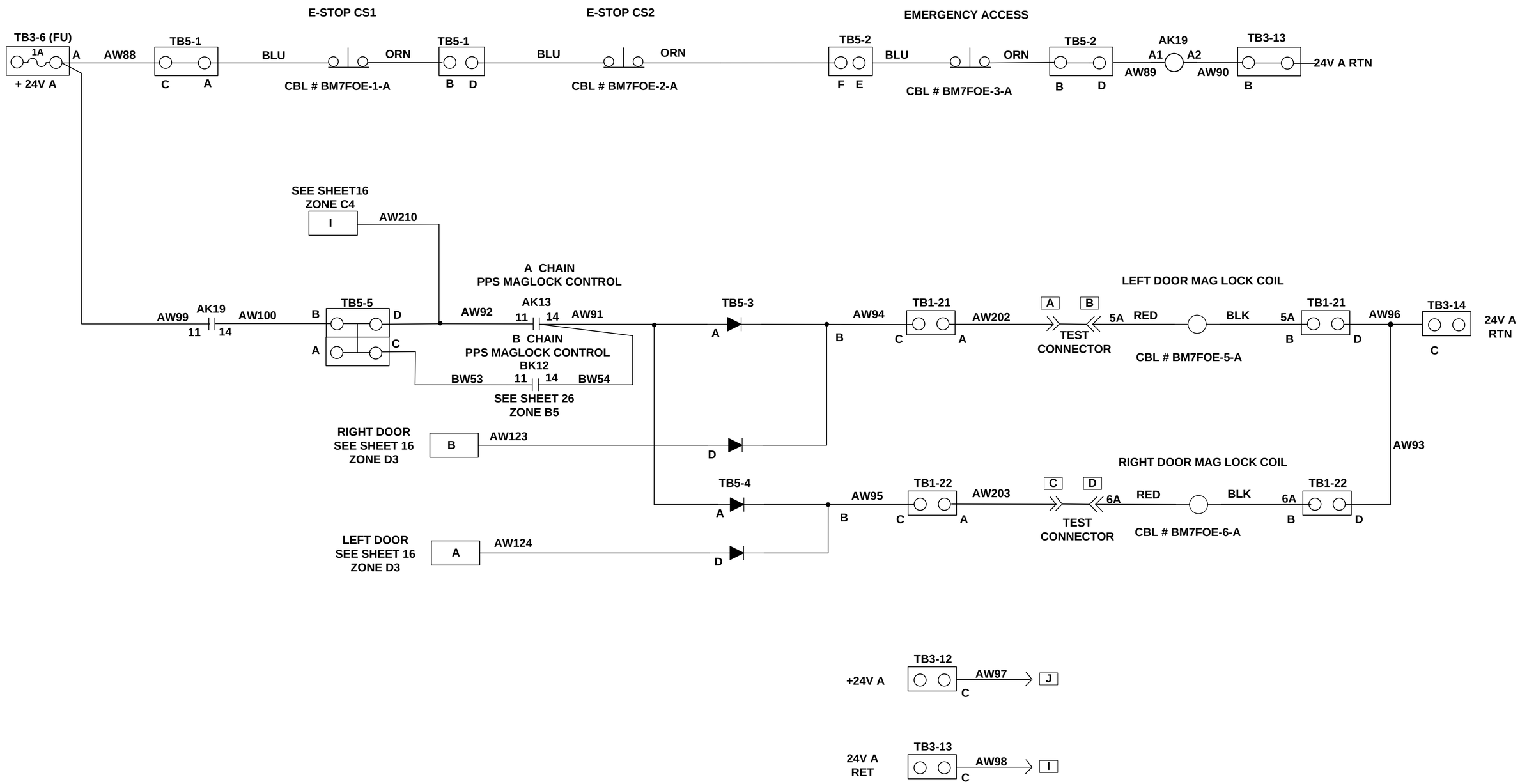

A

LT-EL-BL-EI	LT-EL-BL-EI-PPS-2070-91	A
DRAWING DIRECTORY	DRAWING NUMBER	REV

COMPUTER REPRODUCABLE | SCALE: N/A | SHEET 13 OF 35

LT-EL-BL-EI-PPS-2070-91

REV	DESCRIPTION	DATE	BY	CHECKED	APP
	SEE SHEET 1				

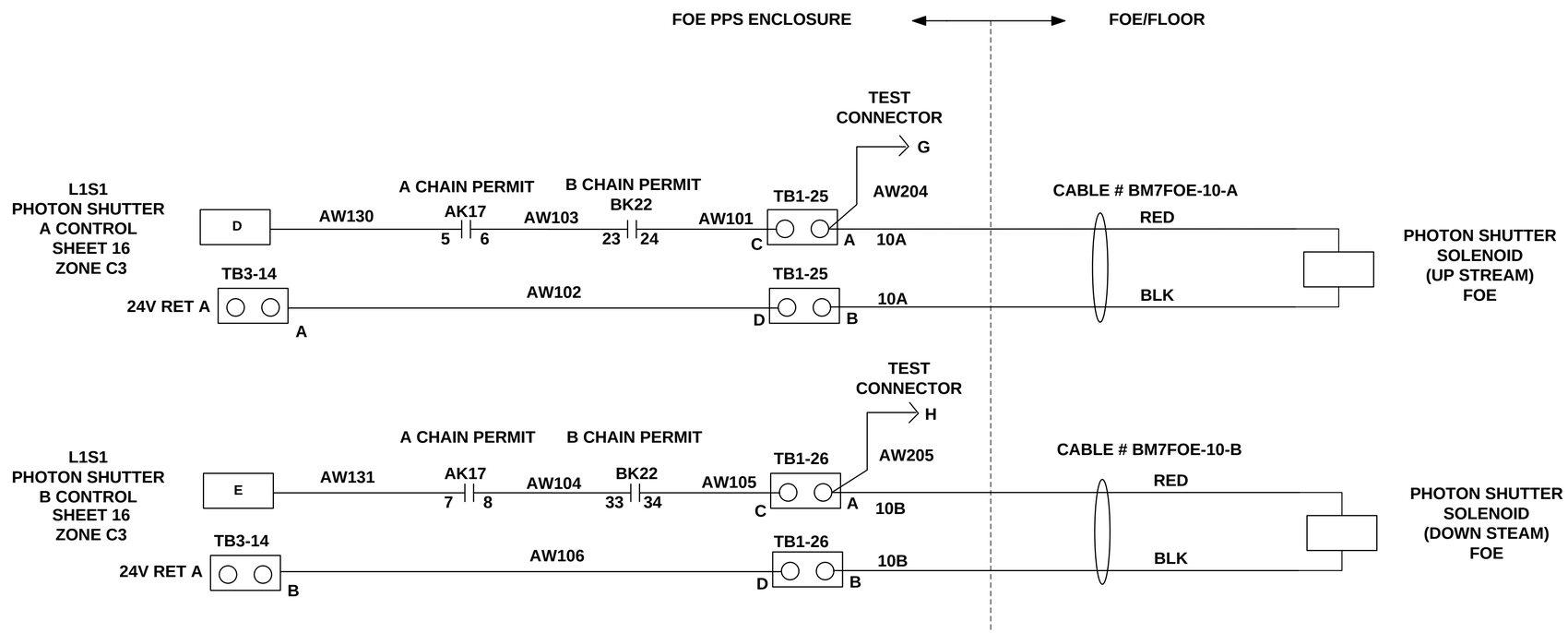

A

LT-EL-BL-EI DRAWING DIRECTORY	LT-EL-BL-EI-PPS-2070-91 DRAWING NUMBER	A REV
COMPUTER REPRODUCABLE	SCALE: N/A	SHEET 14 OF 35

LT-EL-BL-EI-PPS-2070-91

REV	DESCRIPTION	DATE	BY	CHECKED	APP
	SEE SHEET 1				

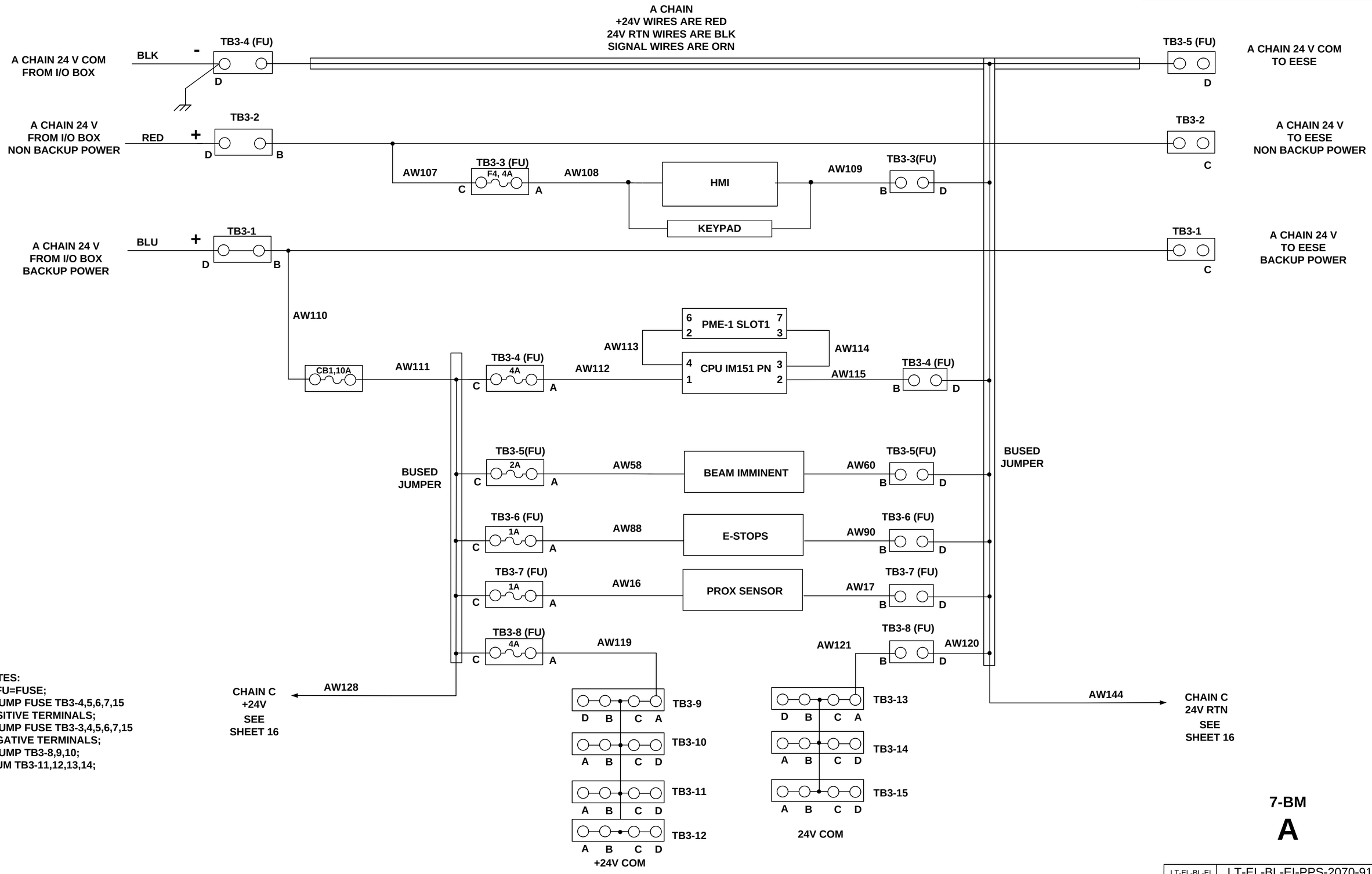

NOTES:
1. FU=FUSE;
2. JUMP FUSE TB3-4,5,6,7,15 POSITIVE TERMINALS;
3. JUMP FUSE TB3-3,4,5,6,7,15 NEGATIVE TERMINALS;
4. JUMP TB3-8,9,10;
5 JUM TB3-11,12,13,14;

7-BM

A

LT-EL-BL-EI (DRAWING DIRECTORY)	LT-EL-BL-EI-PPS-2070-91 (DRAWING NUMBER)	A (REV)
COMPUTER REPRODUCABLE	SCALE: N/A	SHEET 15 OF 35

LT-EL-BL-EI-PPS-2070-91

REV	DESCRIPTION	DATE	BY	CHECKED	APP
	SEE SHEET 1				

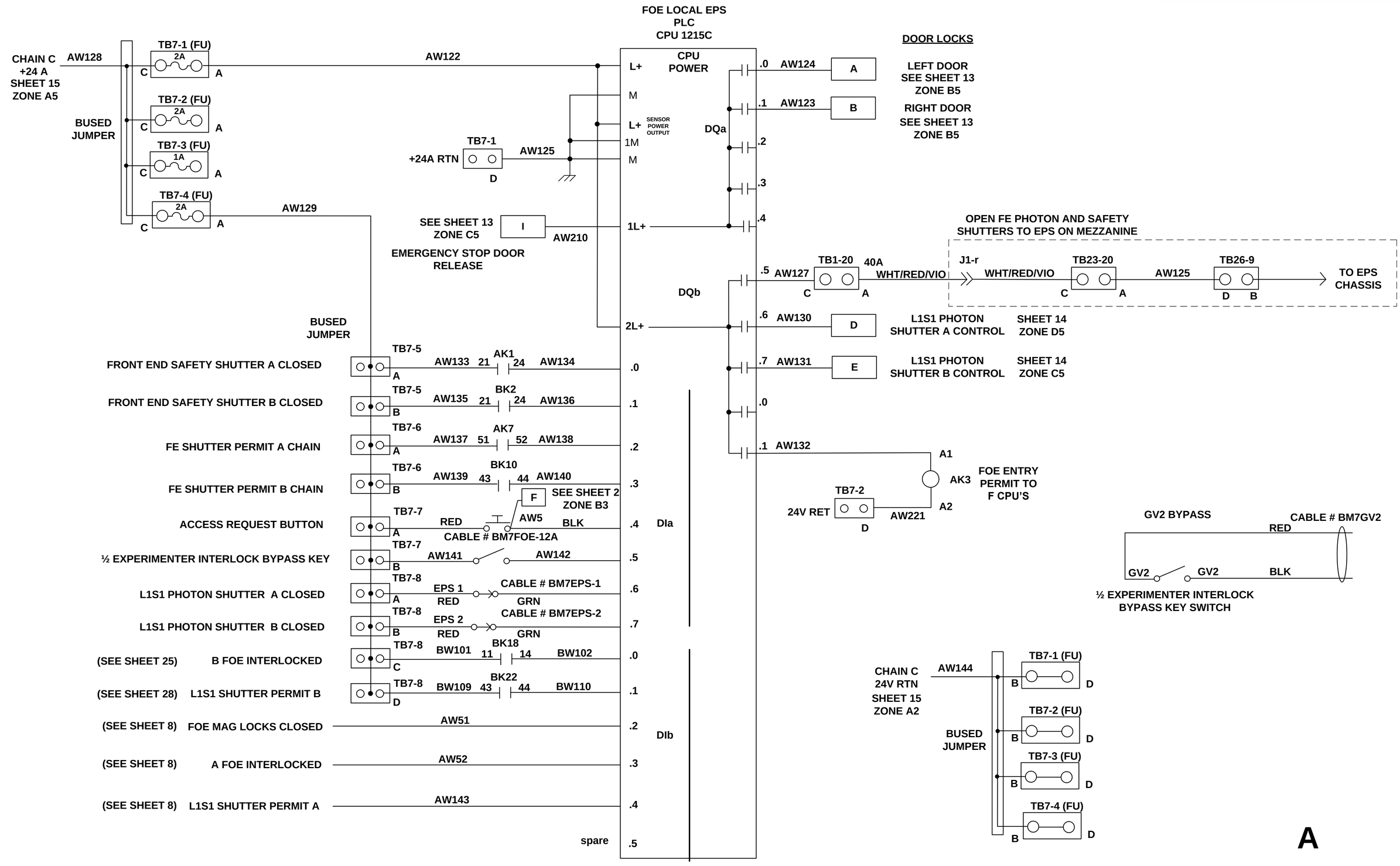

LT-EL-BL-EI (DRAWING DIRECTORY)	LT-EL-BL-EI-PPS-2070-91 (DRAWING NUMBER)	A (REV)
COMPUTER REPRODUCABLE	SCALE: N/A	SHEET 16 OF 35

LT-EL-BL-EI-PPS-2070-91

REV	DESCRIPTION	DATE	BY	CHECKED	APP
	SEE SHEET 1				

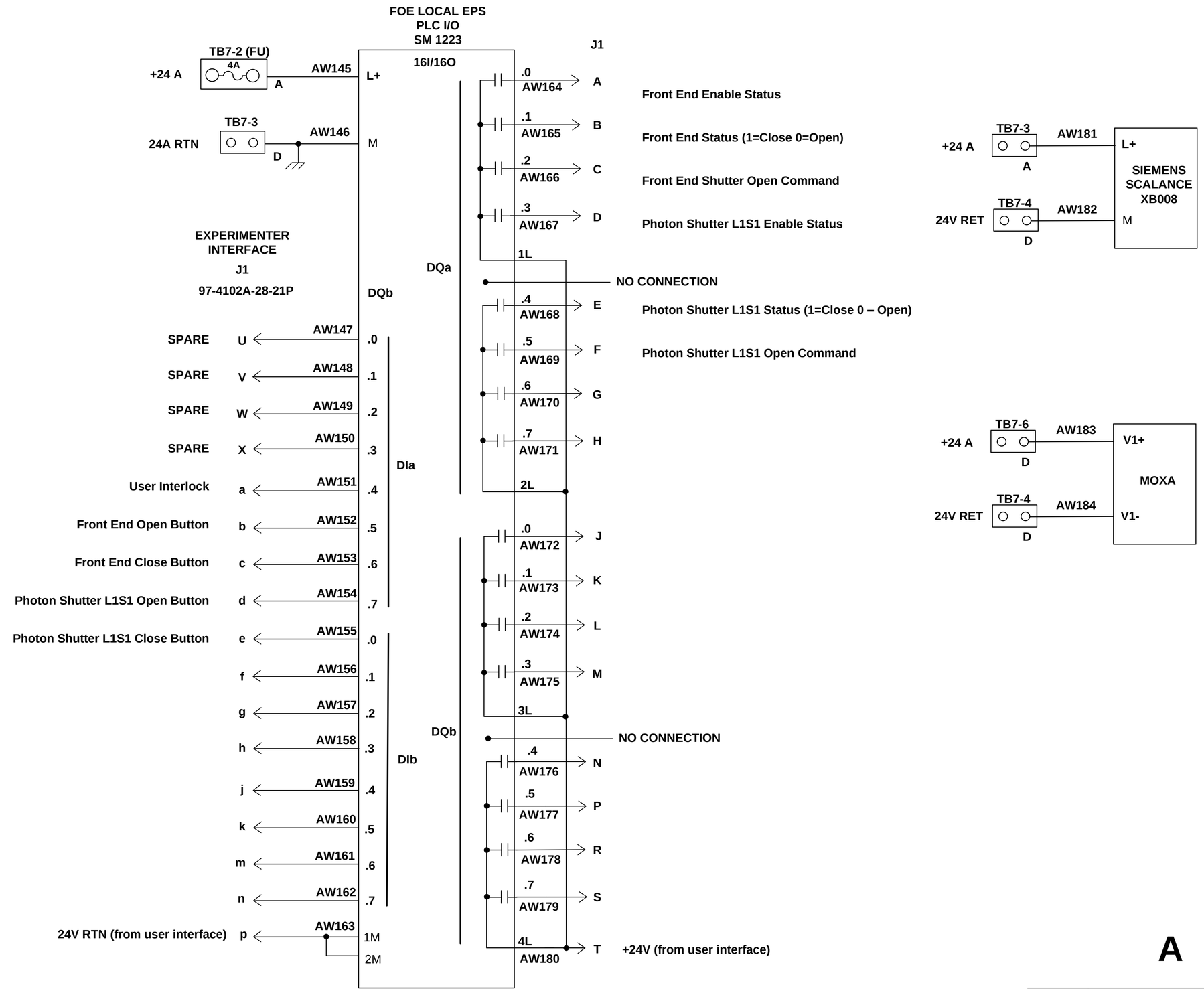

A

LT-EL-BL-EI (DRAWING DIRECTORY)	LT-EL-BL-EI-PPS-2070-91 (DRAWING NUMBER)	A (REV)
COMPUTER REPRODUCABLE	SCALE: N/A	SHEET 17 OF 35

LT-EL-BL-EI-PPS-2070-91

REV	DESCRIPTION	DATE	BY	CHECKED	APP
	SEE SHEET 1				

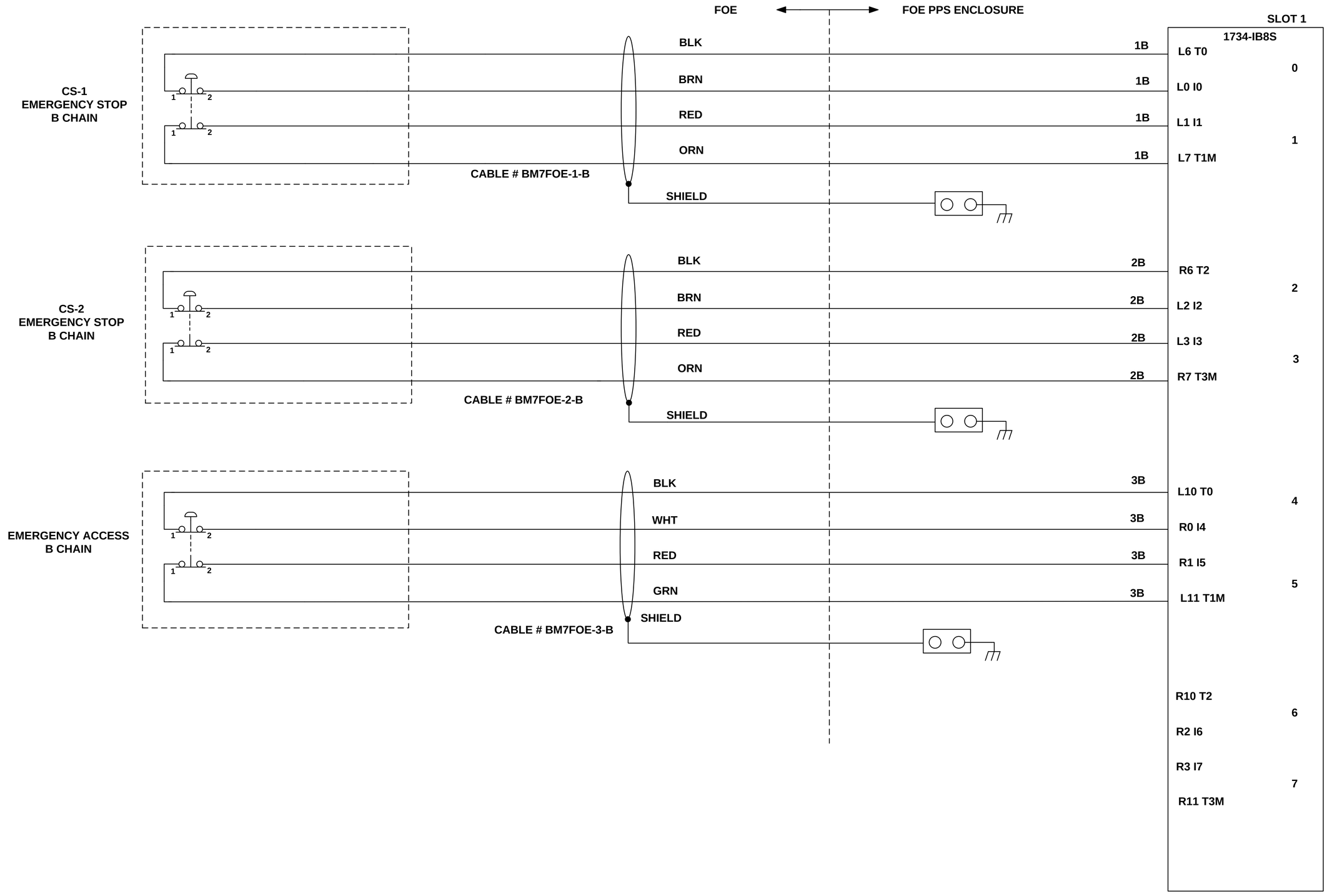

B

LT-EL-BL-EI DRAWING DIRECTORY	LT-EL-BL-EI-PPS-2070-91 DRAWING NUMBER	A REV
COMPUTER REPRODUCABLE	SCALE: N/A	SHEET 18 OF 35

LT-EL-BL-EI-PPS-2070-91

REV	DESCRIPTION	DATE	BY	CHECKED	APP
	SEE SHEET 1				

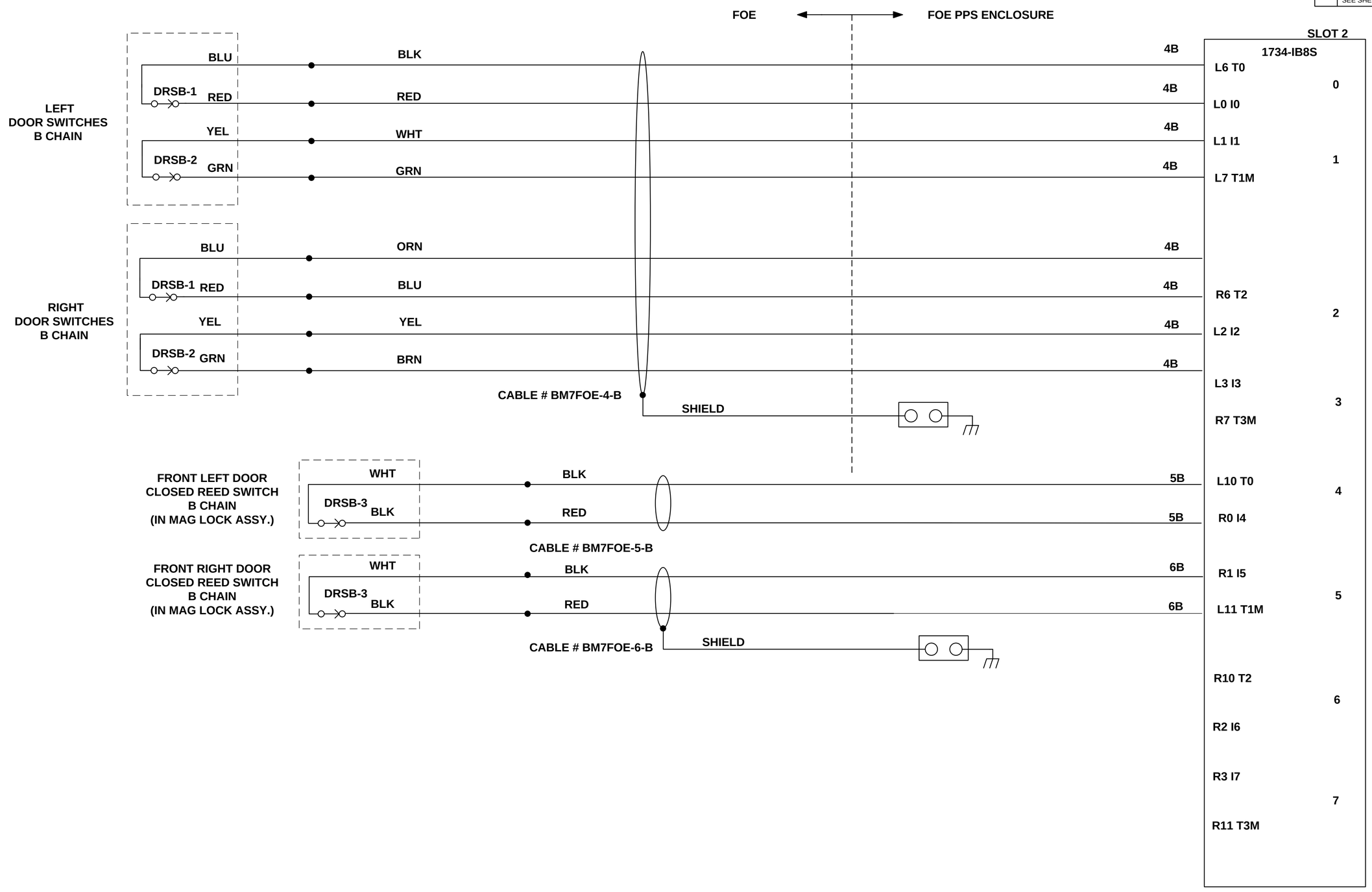

B

LT-EL-BL-EI (DRAWING DIRECTORY)	LT-EL-BL-EI-PPS-2070-91 (DRAWING NUMBER)	A (REV)
COMPUTER REPRODUCABLE	SCALE: N/A	SHEET 19 OF 35

LT-EL-BL-EI-PPS-2070-91

REV	DESCRIPTION	DATE	BY	CHECKED	APP
	SEE SHEET 1				

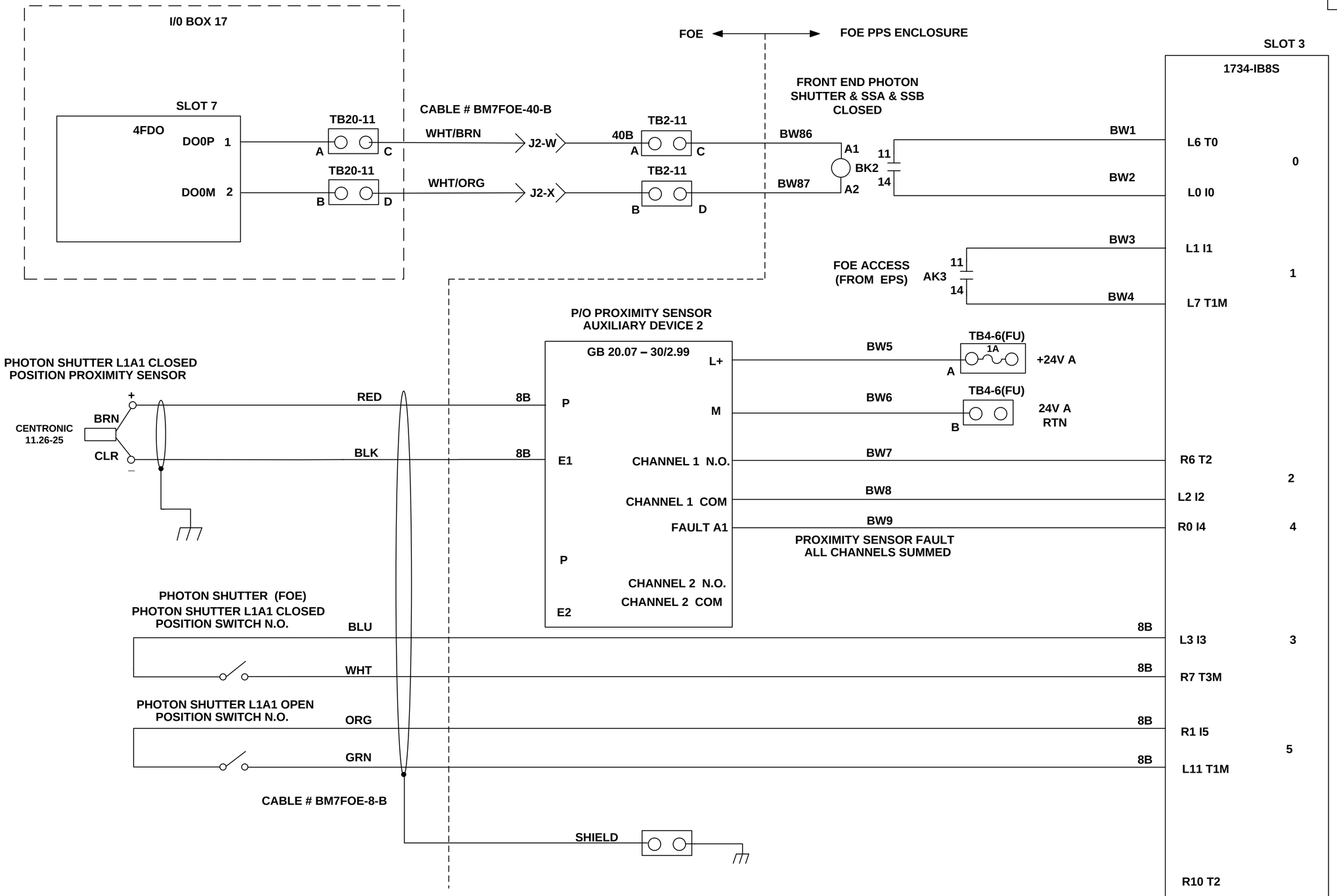

B

LT-EL-BL-EI (DRAWING DIRECTORY)	LT-EL-BL-EI-PPS-2070-91 (DRAWING NUMBER)	A (REV)
COMPUTER REPRODUCABLE	SCALE: N/A	SHEET 20 OF 35

LT-EL-BL-EI-PPS-2070-91

REV	DESCRIPTION	DATE	BY	CHECKED	APP
	SEE SHEET 1				

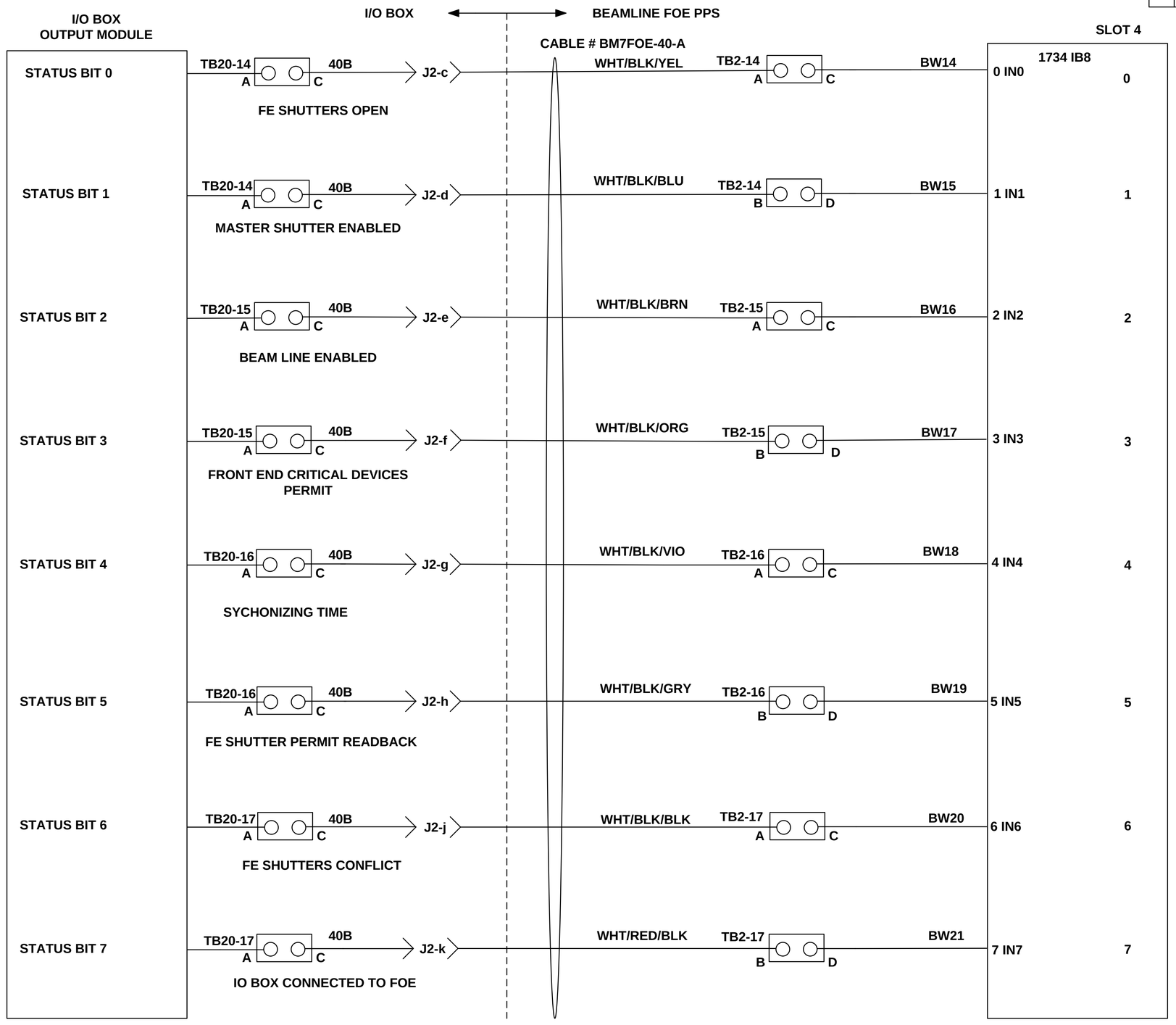

B

LT-EL-BL-EI (DRAWING DIRECTORY)	LT-EL-BL-EI-PPS-2070-91 (DRAWING NUMBER)	A (REV)
COMPUTER REPRODUCABLE	SCALE: N/A	SHEET 21 OF 35

LT-EL-BL-EI-PPS-2070-91

REV	DESCRIPTION	DATE	BY	CHECKED	APP
	SEE SHEET 1				

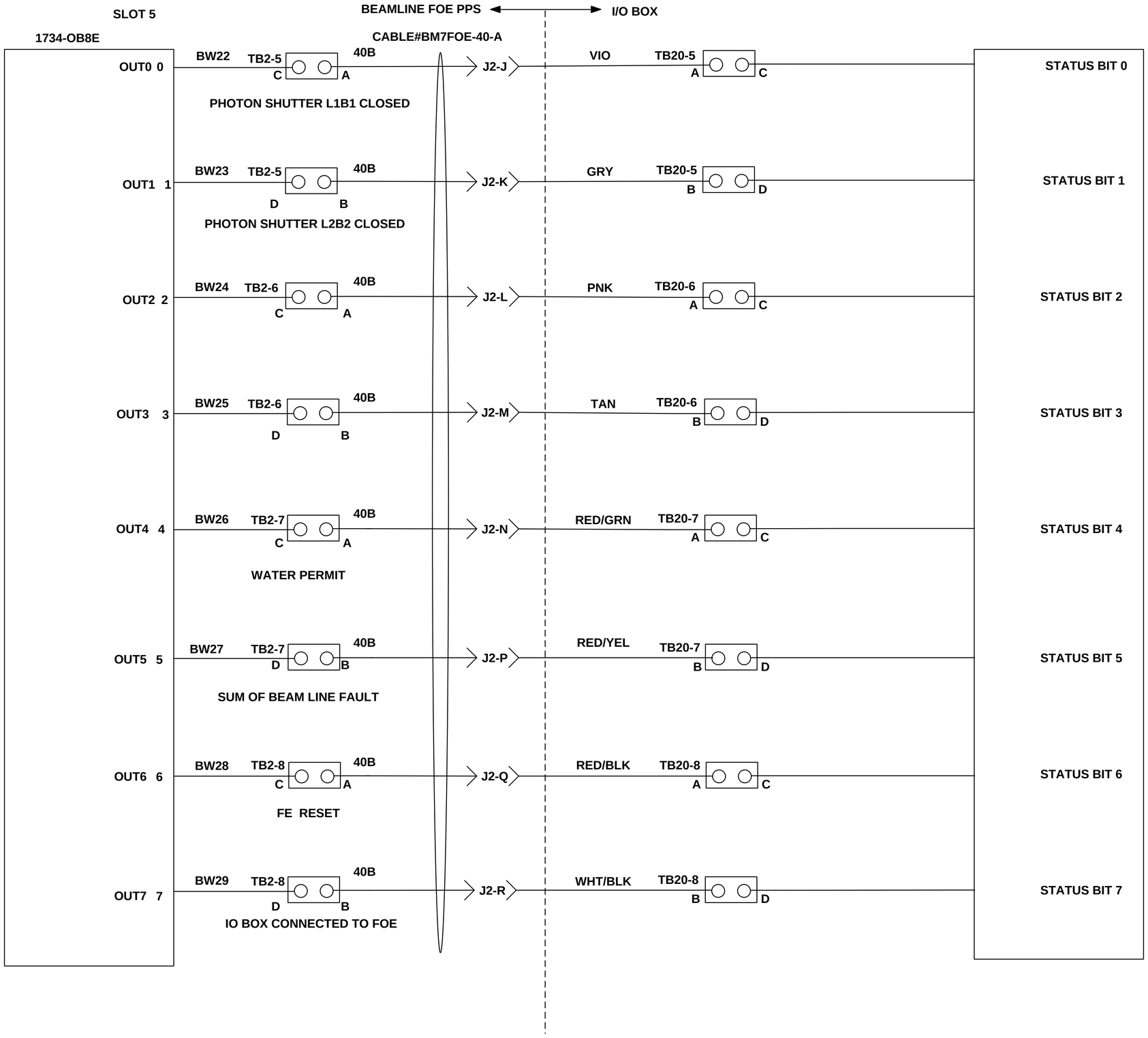

B

LT-EL-BL-EI (DRAWING DIRECTORY)	LT-EL-BL-EI-PPS-2070-91 (DRAWING NUMBER)	A (REV)
COMPUTER REPRODUCABLE	SCALE: N/A	SHEET 22 OF 35

LT-EL-BL-EI-PPS-2070-91

REV	DESCRIPTION	DATE	BY	CHECKED	APP
	SEE SHEET 1				

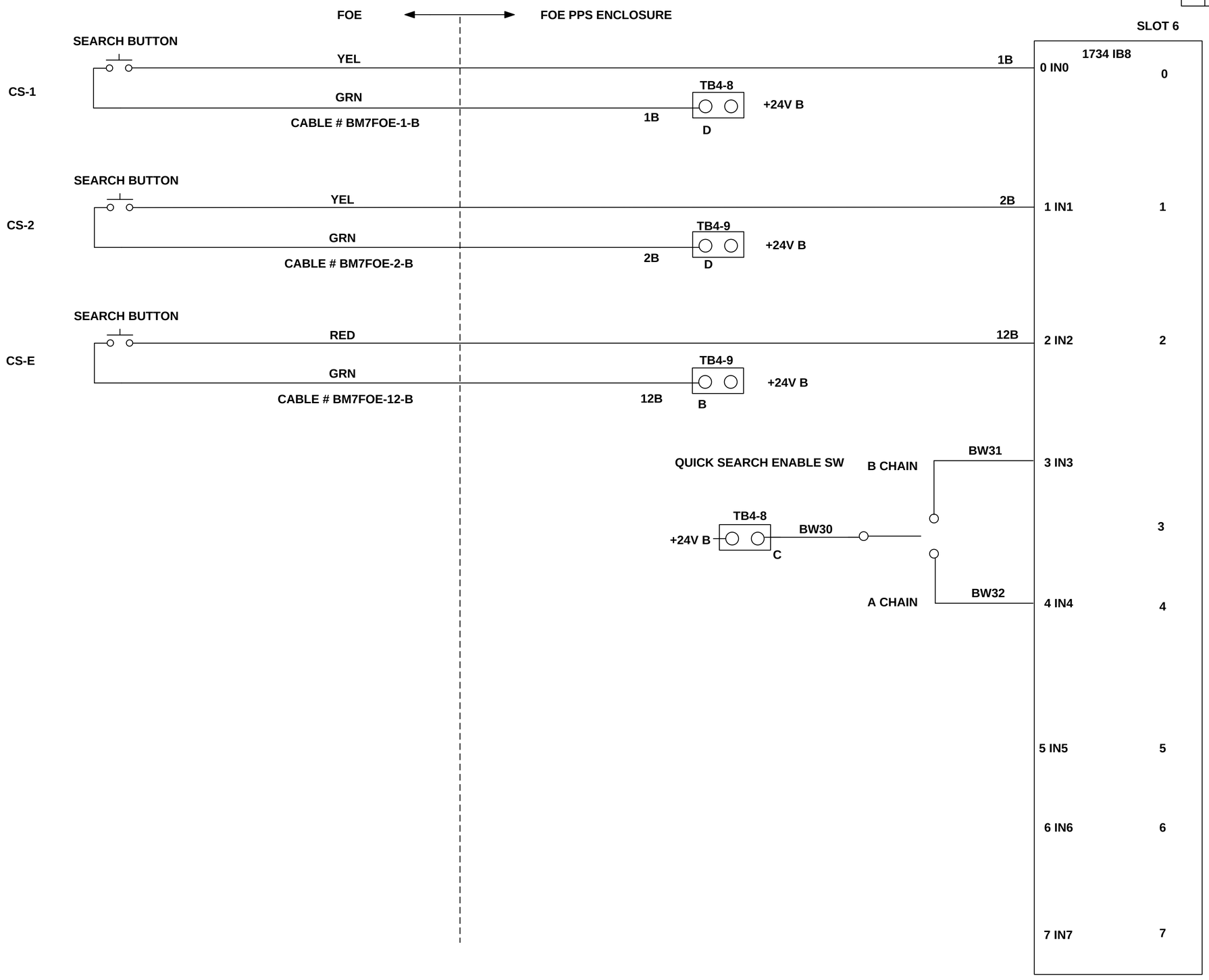

B

LT-EL-BL-EI DRAWING DIRECTORY	LT-EL-BL-EI-PPS-2070-91 DRAWING NUMBER	A REV
COMPUTER REPRODUCABLE	SCALE: N/A	SHEET 23 OF 35

LT-EL-BL-EI-PPS-2070-91

REV	DESCRIPTION	DATE	BY	CHECKED	APP
	SEE SHEET 1				

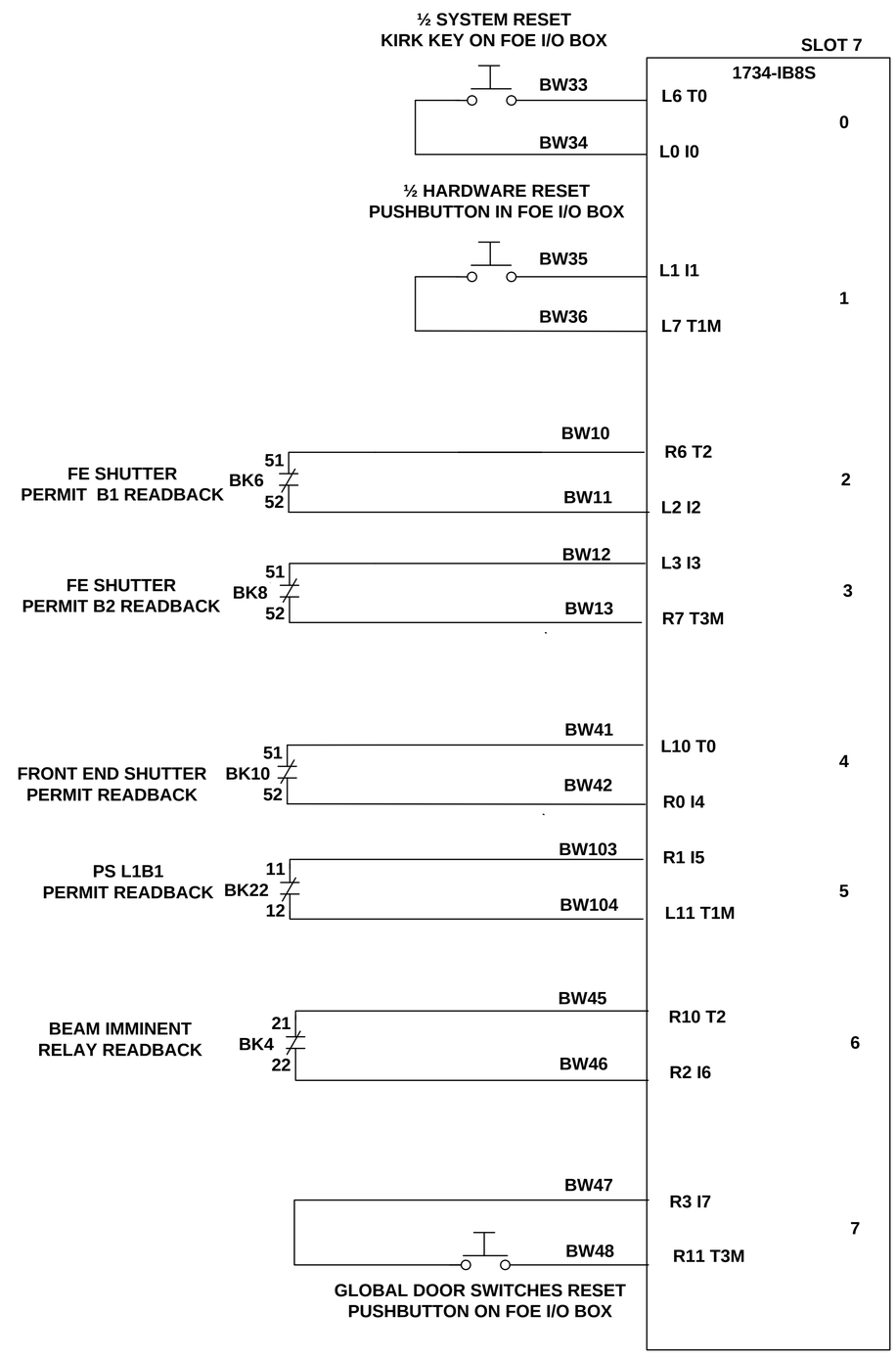

B

LT-EL-BL-EI DRAWING DIRECTORY	LT-EL-BL-EI-PPS-2070-91 DRAWING NUMBER	A REV
COMPUTER REPRODUCABLE	SCALE: N/A	SHEET 24 OF 35

LT-EL-BL-EI-PPS-2070-91

REV	DESCRIPTION	DATE	BY	CHECKED	APP
	SEE SHEET 1				

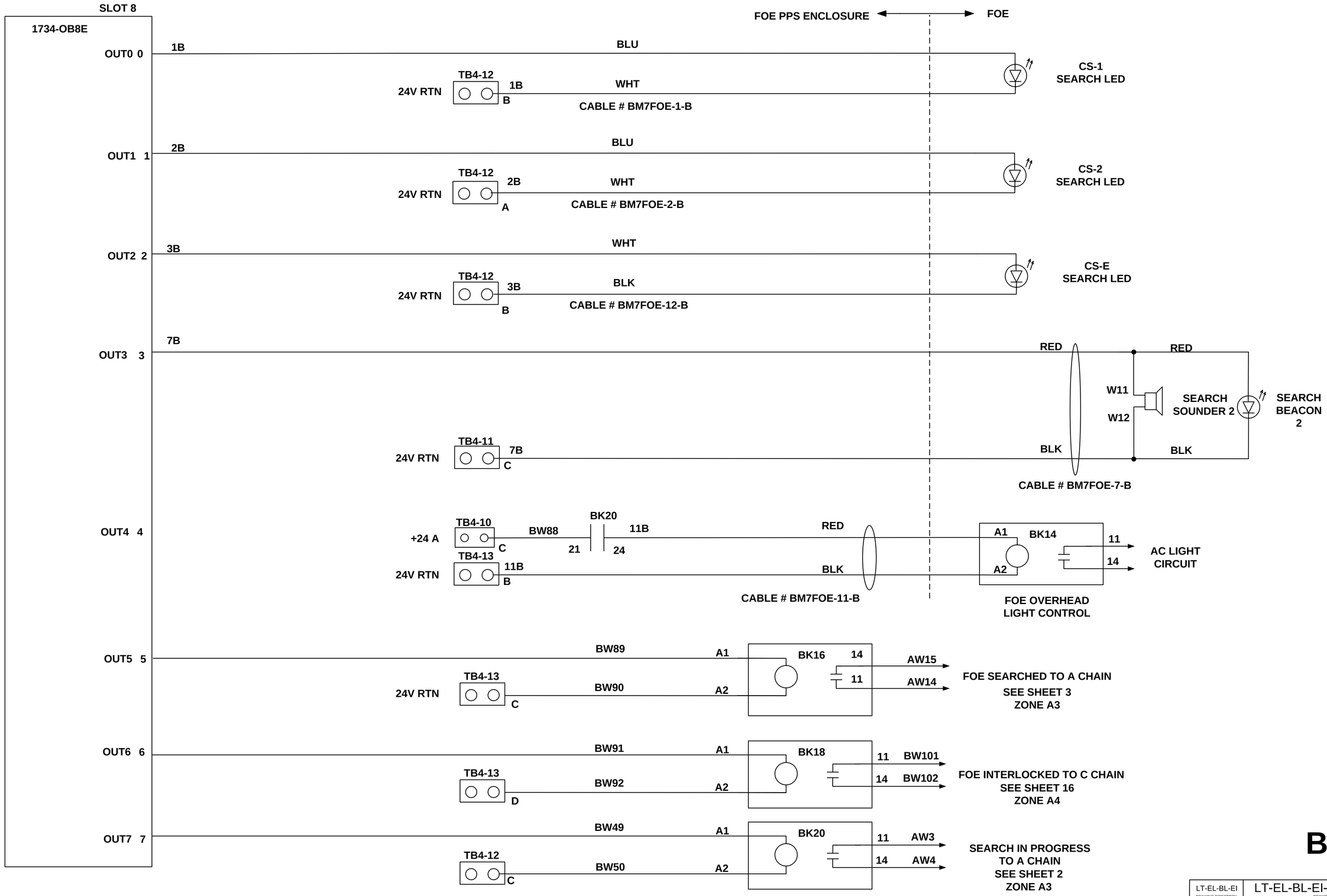

B

LT-EL-BL-EI DRAWING DIRECTORY	LT-EL-BL-EI-PPS-2070-91 DRAWING NUMBER	A REV
COMPUTER REPRODUCABLE	SCALE: N/A	SHEET 25 OF 35

LT-EL-BL-EI-PPS-2070-91

REV	DESCRIPTION	DATE	BY	CHECKED	APP
	SEE SHEET 1				

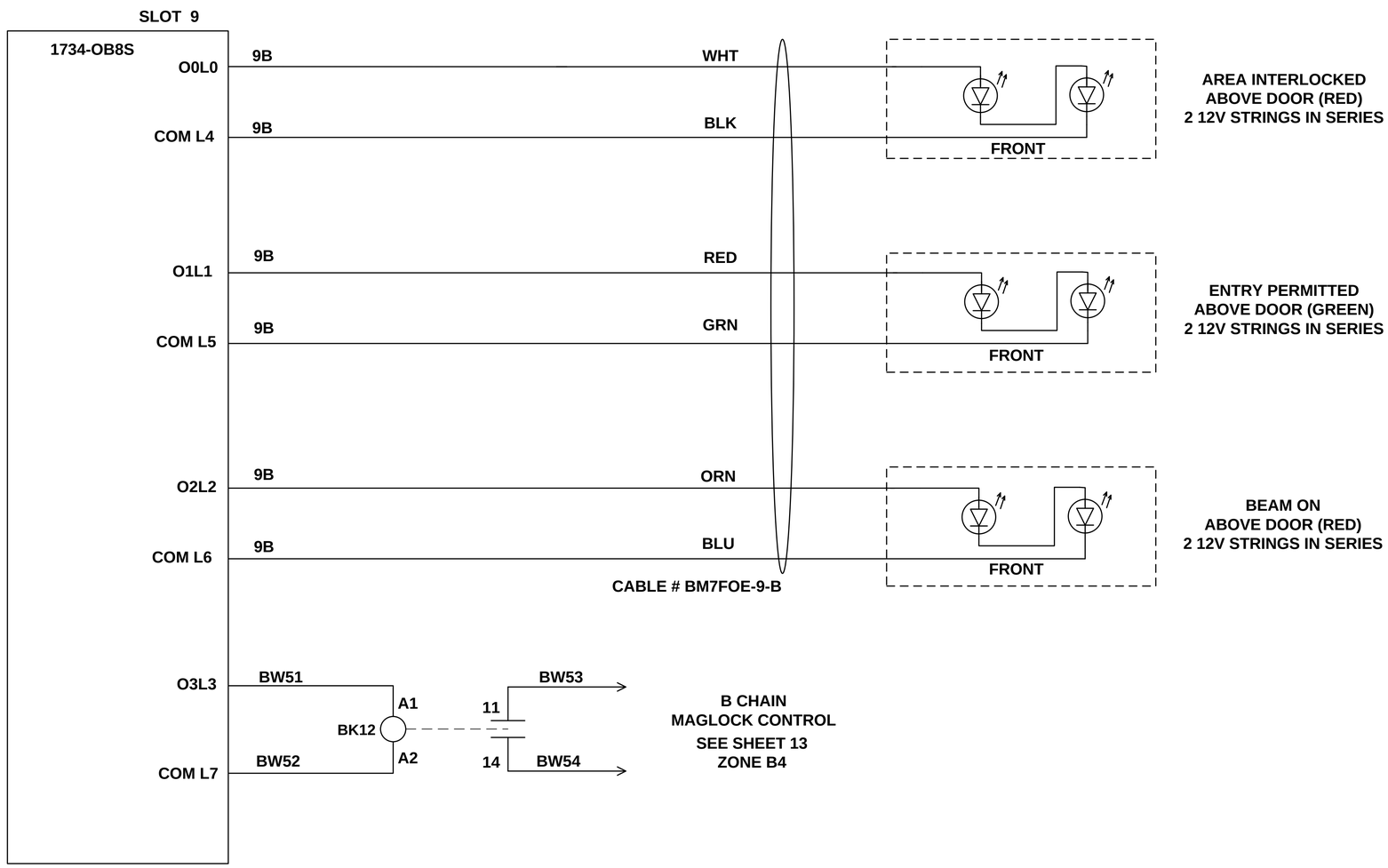

B

LT-EL-BL-EI (DRAWING DIRECTORY)	LT-EL-BL-EI-PPS-2070-91 (DRAWING NUMBER)	A (REV)
COMPUTER REPRODUCABLE	SCALE: N/A	SHEET 26 OF 35

LT-EL-BL-EI-PPS-2070-91

REV	DESCRIPTION	DATE	BY	CHECKED	APP
	SEE SHEET 1				

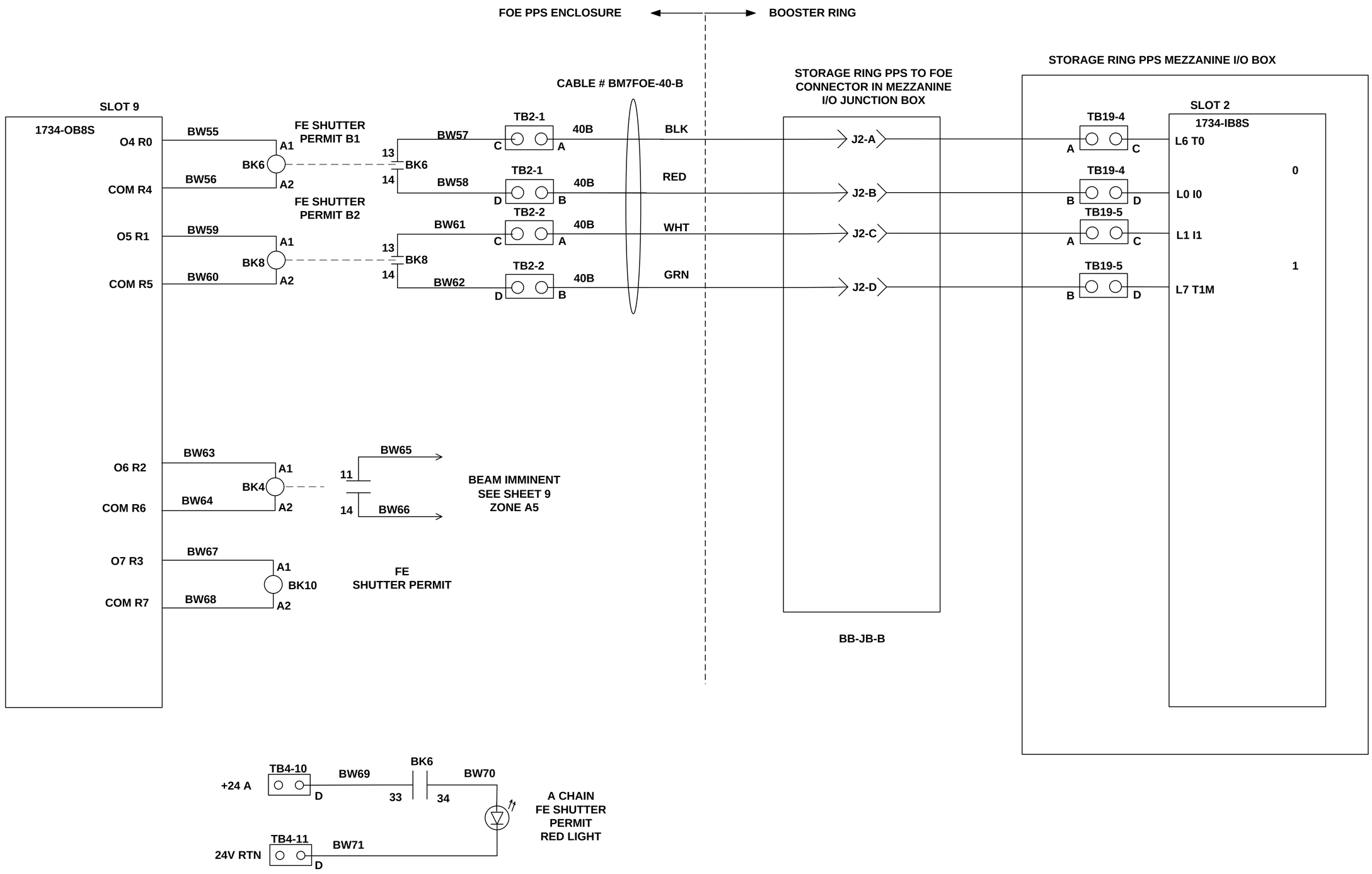

B

LT-EL-BL-EI (DRAWING DIRECTORY)	LT-EL-BL-EI-PPS-2070-91 (DRAWING NUMBER)	A (REV)
COMPUTER REPRODUCABLE	SCALE: N/A	SHEET 27 OF 35

LT-EL-BL-EI-PPS-2070-91

REV	DESCRIPTION	DATE	BY	CHECKED	APP
	SEE SHEET 1				

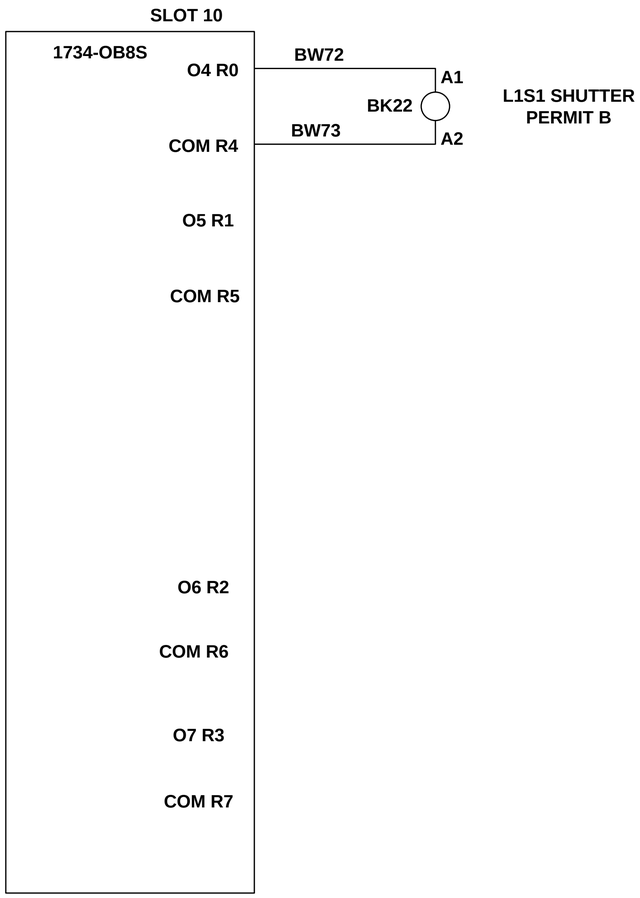

B

LT-EL-BL-EI DRAWING DIRECTORY	LT-EL-BL-EI-PPS-2070-91 DRAWING NUMBER	A REV
COMPUTER REPRODUCABLE	SCALE: N/A	SHEET 28 OF 35

LT-EL-BL-EI-PPS-2070-91

REV	DESCRIPTION	DATE	BY	CHECKED	APP
	SEE SHEET 1				

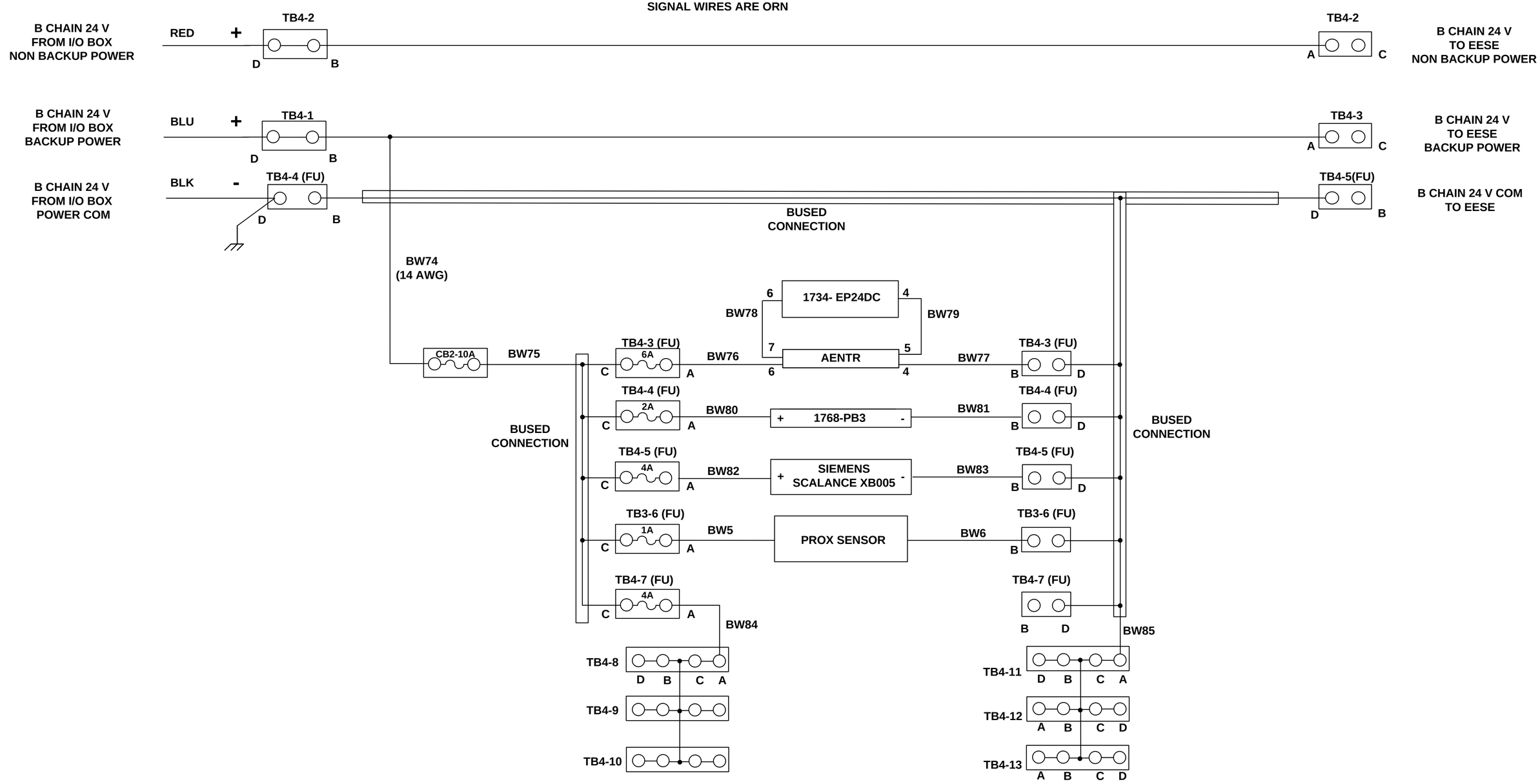

B

LT-EL-BL-EI	LT-EL-BL-EI-PPS-2070-91	A
DRAWING DIRECTORY	DRAWING NUMBER	REV
COMPUTER REPRODUCABLE	SCALE: N/A	SHEET 29 OF 35

LT-EL-BL-EI-PPS-2070-91

REV	DESCRIPTION	DATE	BY	CHECKED	APP
	SEE SHEET 1				

BM BEAM LINE 24 V POWER
LOCATED IN MEZZANINE I/O BOX

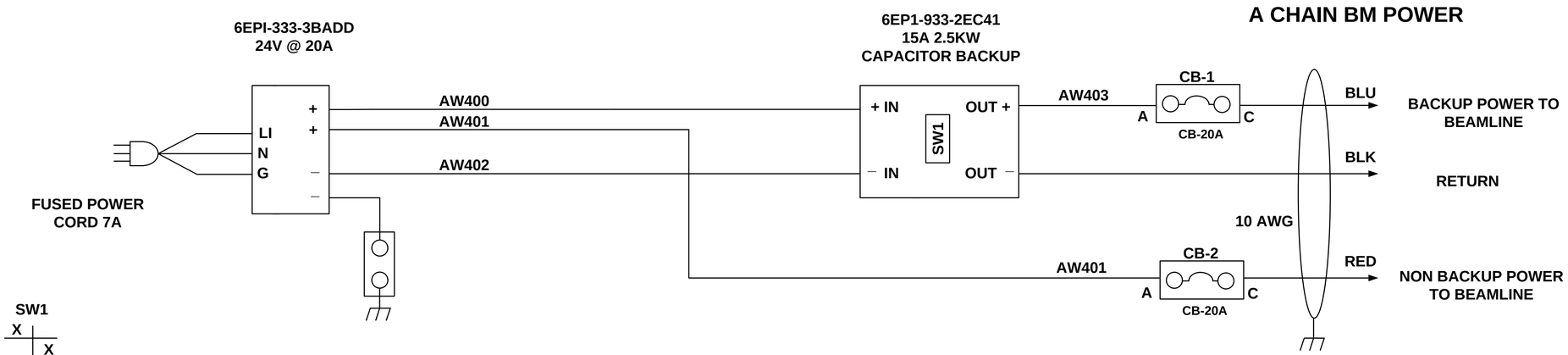

SW1

1	X	
2		X
3		X
4	X	
5	X	
6	X	
7	X	
8	X	
9	X	
10	X	
11		X
12	X	

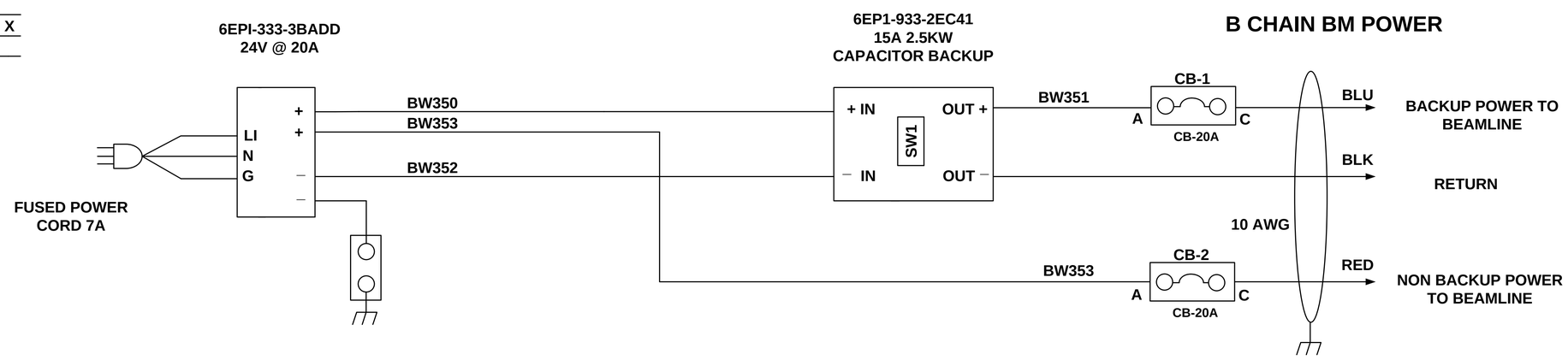

7-BM

B

LT-EL-BL-EI (DRAWING DIRECTORY)	LT-EL-BL-EI-PPS-2070-91 (DRAWING NUMBER)	A (REV)
COMPUTER REPRODUCABLE	SCALE: N/A	SHEET 30 OF 35

LT-EL-BL-EI-PPS-2070-91

REV	DESCRIPTION	DATE	BY	CHECKED	APP
	SEE SHEET 1				

7-BM NETWORK LAYOUT

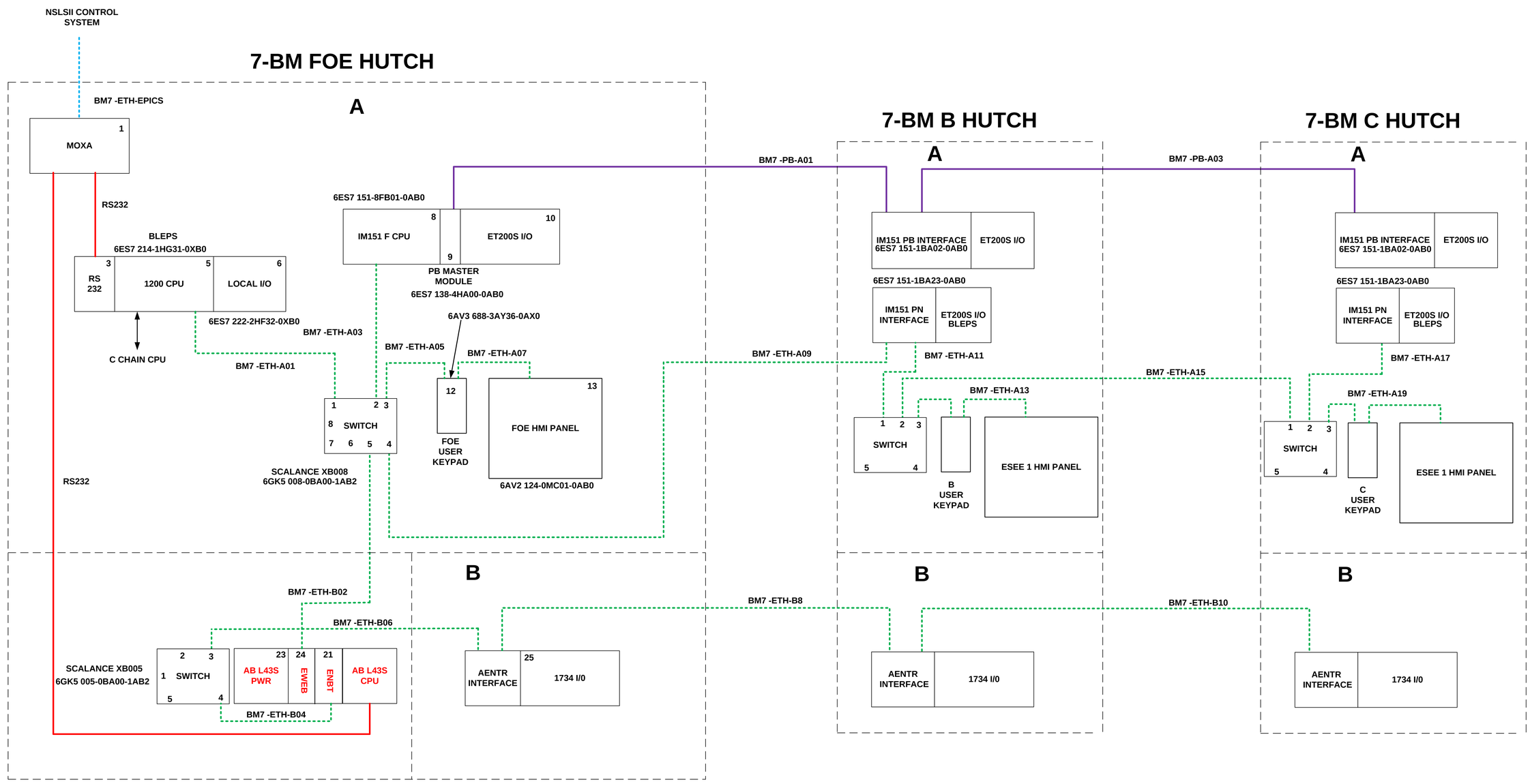

NOTES:
(1) FOE WATER INTERLOCK I/O IS NOT IN ALL BEAMLINE PPS. IF PPS DOES NOT HAS WATER INTERLOCK I/O, B CHAIN ETHERNET CABLE NUMBER WILL BE SEQUENTIALLY NAMED AFTER BM17-ETH-004.
(2) BEAM LINE BM17 HAVE WATER INTERLOCK I/O.

ETHERNET FRONT END SAFETY SUBNET
ETHERNET BEAMLINE SUBNET
PROFIBUS
RS 232

LT-EL-BL-EI (DRAWING DIRECTORY)	LT-EL-BL-EI-PPS-2070-91 (DRAWING NUMBER)	A (REV)
COMPUTER REPRODUCABLE	SCALE: N/A	SHEET 31 OF 35

LT-EL-BL-EI-PPS-2070-91

REV	DESCRIPTION	DATE	BY	CHECKED	APP
	SEE SHEET 1				

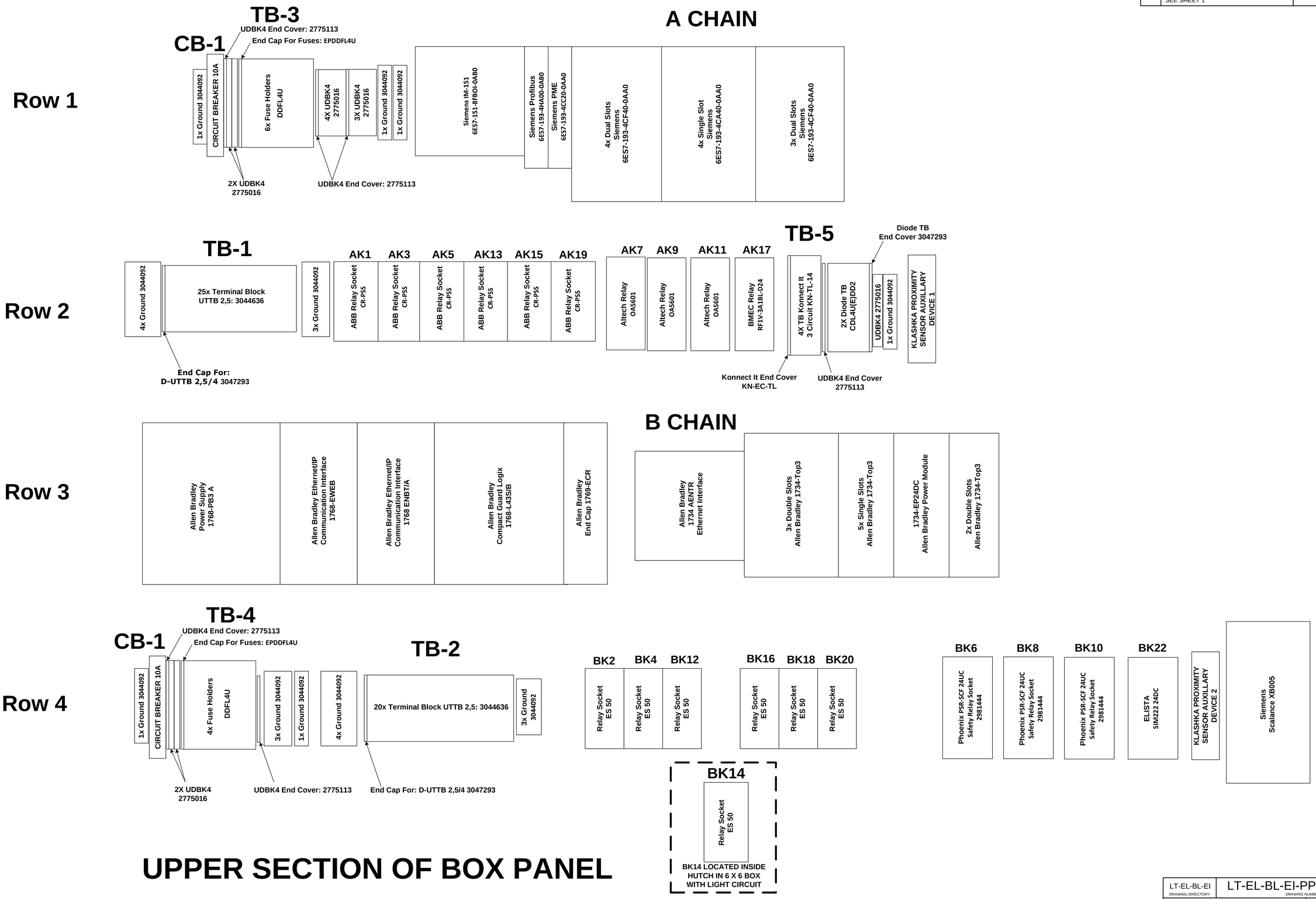

LT-EL-BL-EI-PPS-2070-91

LT-EL-BL-EI (DRAWING DIRECTORY)	LT-EL-BL-EI-PPS-2070-91 (DRAWING NUMBER)	A (REV)
COMPUTER REPRODUCABLE	SCALE: N/A	SHEET 32 OF 35

REV	DESCRIPTION	DATE	BY	CHECKED	APP
	SEE SHEET 1				

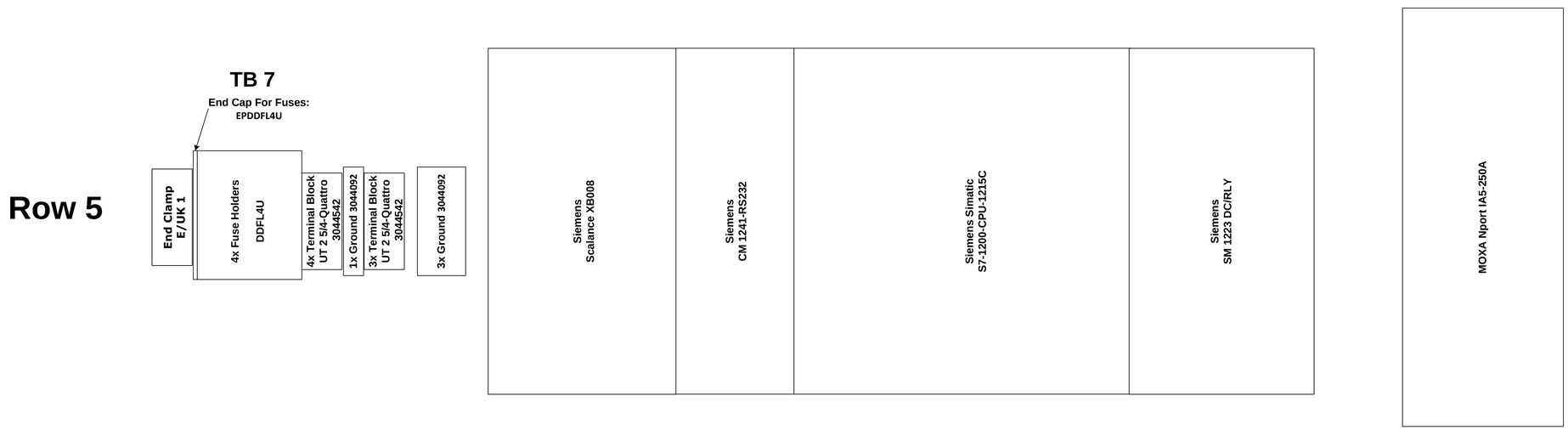

LOWER SECTION OF BOX PANEL

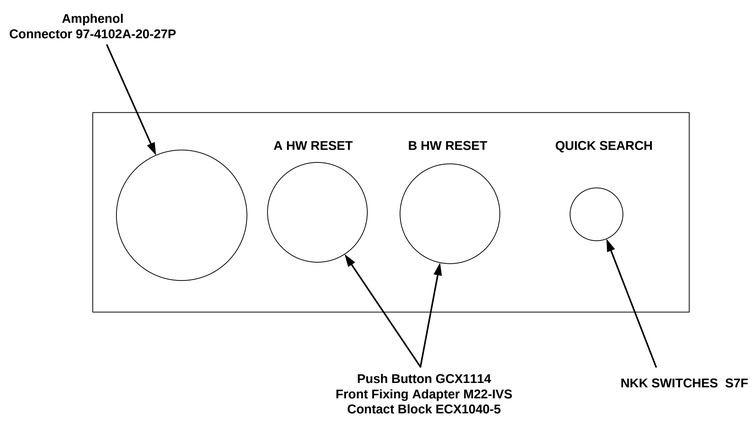

ENCLOSURE INSIDE WALL

LT-EL-BL-EI (DRAWING DIRECTORY)	LT-EL-BL-EI-PPS-2070-91 (DRAWING NUMBER)	A (REV)
COMPUTER REPRODUCABLE	SCALE: N/A	SHEET 33 OF 35

LT-EL-BL-EI-PPS-2070-91

REV	DESCRIPTION	DATE	BY	CHECKED	APP
	SEE SHEET 1				

ROW 1:				
CB 1	WMZS1B10	N/A	Circuit Breaker B10	Eaton
TB 3				
SLOT	MODULE	SOCKET	DESCRIPTION	VENDOR
	6ES7-151-8FB00-0AB0	N/A	IM-151-8 F CPU	SIEMENS
	6ES7-138-4HA00-0AB0	N/A	DP MASTER INTERFACE	SIEMENS
1	6ES7-138-4CA50-0AB0	6ES7-193-4CC20-0AA0	POWER MODULE PM-E	SIEMENS
2	6ES7-138-4FA04-0AB0	6ES7-193-4CF40-0AA0	4/8FDI SAFETY INPUT	SIEMENS
3	6ES7-138-4FA04-0AB0	6ES7-193-4CF40-0AA0	4/8FDI SAFETY INPUT	SIEMENS
4	6ES7-138-4FA04-0AB0	6ES7-193-4CF40-0AA0	4/8FDI SAFETY INPUT	SIEMENS
5	6ES7-138-4FA04-0AB0	6ES7-193-4CF40-0AA0	4/8FDI SAFETY INPUT	SIEMENS
6	6ES7-131-4BF00-0AB0	6ES7-193-4CA40-0AA0	8DI STANDARD IN	SIEMENS
7	6ES7-132-4BF00-0AA0	6ES7-193-4CA40-0AA0	8DO STANDARD OUT	SIEMENS
8	6ES7-131-4BF00-0AB0	6ES7-193-4CA40-0AA0	8DI STANDARD IN	SIEMENS
9	6ES7-132-4BF00-0AA0	6ES7-193-4CA40-0AA0	8DO STANDARD OUT	SIEMENS
10	6ES7-138-4FB03-0AB0	6ES7-193-4CF40-0AA0	4FDO SAFETY OUTPUT	SIEMENS
11	6ES7-138-4FB03-0AB0	6ES7-193-4CF40-0AA0	4FDO SAFETY OUTPUT	SIEMENS
12	6ES7-138-4FB03-0AB0	6ES7-193-4CF40-0AA0	4FDO SAFETY OUTPUT	SIEMENS
13	6ES7-193-4JA00-0AA0	N/A	SOCKET COVER	SIEMENS
14				
15				
ROW 2:				
TB 1				
RELAY	MODULE	SOCKET	DESCRIPTION	VENDOR
AK1	OW5669.12/983/61	RT 78626	RELAY	ALTECH/DOLD
AK3	OW5669.12/983/61	RT 78626	RELAY	ALTECH/DOLD
AK5	OW5669.12/983/61	RT 78626	RELAY	ALTECH/DOLD
AK7	OA5601	N/A	ALTECH RELAY	BNL
AK9	OA5601	N/A	ALTECH RELAY	BNL
AK11	OA5601	N/A	ALTECH RELAY	BNL
AK13	OW5669.12/983/61	RT 78626	RELAY	ALTECH/DOLD
AK15	OW5669.12/983/61	RT 78626	RELAY	ALTECH/DOLD
AK17	RF1V-3A1BL-D24	SF1V-4-07L	IDEC	IDEC
AK19	OW5669.12/983/61	RT 78626	RELAY	ALTECH/DOLD

	A CHAIN RELAY DESCRIPTIONS
AK1	FRONT END PHOTON AND SAFETY SHUTTERS CLOSED
AK3	FOE ACCESS FROM EPS
AK5	BEAM IMMINENT WARNING
AK7	FE SHUTTER PERMIT A1
AK9	FE SHUTTER PERMIT A2
AK11	A CHAIN FRONT END SHUTTER PERMIT
AK13	A CHAIN PPS MAG LOCK CONTROL
AK15	DOOR OPENER INHIBIT RELAY
AK17	A CHAIN FOE SHUTTER PERMIT
AK19	E STOP HARDWIRE RELAY
	B CHAIN RELAY DESCRIPTIONS
BK2	FRONT END PHOTON AND SAFETY SHUTTERS CLOSED
BK4	BEAM IMMINENT RELAY
BK6	FE SHUTTER PERMIT B1
BK8	FE SHUTTER PERMIT B2
BK10	B CHAIN FRONT END SHUTTER PERMIT
BK12	B CHAIN PPS MAG LOCK CONTROL
BK14	OVERHEAD LIGHT CONTROL
BK16	B CHAIN FOE SEARCHED TO A CHAIN CPU
BK18	B CHAIN FOE SECURE TO C CHAIN
BK20	B CHAIN SEARCH IN PROGRESS
BK22	B CHAIN FOR SHUTTER PERMIT

SLOT	MODULE	SOCKET	DESCRIPTION	VENDOR
	1734-AENTR	N/A	24V DC EHTERNET ADAPTER	AB
1	1734-IB8S	1734-TOP3 (2)	8 INPUT SAFETY	AB
2	1734-IB8S	1734-TOP3 (2)	8 INPUT SAFETY	AB
3	1734-IB8S	1734-TOP3 (2)	8 INPUT SAFETY	AB
4	1734-IB8	1734-TOP3	STANDARD 8 INPUT MODULE	AB
5	1734-OB8E	1734-TOP3	8 CURRENT SOURCE	AB
6	1734-IB8	1734-TOP3	STANDARD 8 INPUT MODULE	AB
	1734-EP24DC	N/A	POWER MODULE PM-E	AB
7	1734-IB8	1734-TOP3	STANDARD 8 INPUT MODULE	AB
8	1734-OB8E	1734-TOP3	8 CURRENT SOURCE	AB
9	1734-OB8S	1734-TOP3 (2)	8 OUTPUT SAFETY	AB
10	1734-OB8S	1734-TOP3 (2)	8 OUTPUT SAFETY	AB
AMPLIFIER	ZSS2/b00ca-1.68	N/A	SENSOR SWITCH AMPLIFIER	KLASCHKA
AMPLIFIER	ZSS2/b00ca-1.68	N/A	SENSOR SWITCH AMPLIFIER	KLASCHKA
TB 5				
ROW 4:				
TB 2				
RELAY	MODULE	SOCKET	DESCRIPTION	VENDOR
BK2	SGR282Z	RT 78626	RELAY	SHRACK
BK4	SGR282Z	RT 78626	RELAY	SHRACK
BK6	2981444		PSR-SCF 24UC SAFETY RELAY	PHOENIX
BK8	2981444		PSR-SCF 24UC SAFETY RELAY	PHOENIX
BK10	2981444		PSR-SCF 24UC SAFETY RELAY	PHOENIX
BK12	SGR282Z	RT 78626	RELAY	SHRACK
BK18	SGR282Z	RT 78626	RELAY	SHRACK
BK14	SGR282Z	RT 78626	RELAY	SHRACK
BK16	SIM222 24VDC	SRD-SIM4	24V RELAY	ELESTA
BK20	SIM222 24VDC	SRD-SIM4	24V RELAY	ELESTA
BK22	SIM222 24VDC	SRD-SIM4	24V RELAY	ELESTA
ROW 5:				
TB7				
SCALANCE XB008 SIEMENS				
SLOT	MODULE	SOCKET	DESCRIPTION	VENDOR
1	CM1241-RS232		SERIAL MODULE	SIEMENS
2	S7-1200-CPU-1215C		CPU	SIEMENS
3	SM1222 RLY		RELAY MODULE	SIEMENS
4	SM1223 DC/RLY		RELAY I/O MODULE	SIEMENS
MOXA Nport IA5-250A				

LT-EL-BL-EI-PPS-2070-91

LT-EL-BL-EI (DRAWING DIRECTORY)	LT-EL-BL-EI-PPS-2070-91 (DRAWING NUMBER)	A (REV)
COMPUTER REPRODUCABLE	SCALE: N/A	SHEET 34 OF 35

REV	DESCRIPTION	DATE	BY	CHECKED	APP
	SEE SHEET 1				

CABLE Num.	CHAIN	From LOCATION	To LOCATION	CONDUCTORS Needed
BM7FOE-1-A	A	FOE	Emergency stop1	6
BM7FOE-1-B	B	FOE	CS1&Emergency stop	8
BM7FOE-2-A	A	FOE	Emergency stop2	6
BM7FOE-2-B	B	FOE	CS2&Emergency stop	8
BM7FOE-3-A	A	FOE	Emergency Access E-Stop	6
BM7FOE-3-B	B	FOE	Emergency Access E-Stop	4
BM7FOE-4-A	A	FOE	Left&Right Door Switches	8
BM7FOE-4-B	B	FOE	Left&Right Door Switches	8
BM7FOE-5-A	A	FOE	Left Door Maglock Switches&Maglock Solenoid	4
BM7FOE-5-B	B	FOE	Left Door Reed Switch	2
BM7FOE-6-A	A	FOE	Right Door Maglock Switches& Maglock Solenoid	4
BM7FOE-6-B	B	FOE	Right Door Reed switch	2
BM7FOE-7-A	A	FOE	Beam Imminent Beacon&Sounder 1	2
BM7FOE-7-B	B	FOE	Search Beacon and Sounder	2
BM7FOE-8-A	A	FOE	FOE Photon Shutter A, Switches and Proximity Sensor	6
BM7FOE-8-B	B	FOE	FOE Photon Shutter B, Switches and Proximity Sensor	6
BM7FOE-9-A	A	FOE	FRONT A Chain Interlock, Entry Permit, Beam lights	6
BM7FOE-9-B	B	FOE	FRONT B Chain Interlock, Entry Permit, Beam lights	6
BM7FOE-10-A	A	FOE	FOE Photon Shutter Solenoid A	2
BM7FOE-10-B	B	FOE	FOE Photon Shutter Solenoid B	2
BM7FOE-11-A	A	FOE	Door Opener Inhibiting Relay	2
BM7FOE-11-B	B	FOE	OverHead Lights	2
BM7FOE-12-A	A	FOE	CS-E/ACCESS TO C Chain	2
BM7FOE-12-B	B	FOE	CS-E	4
BM7FOE-40-A	A	FOE	STORAGE RING I/O BOX	39
BM7FOE-40-B	B	FOE	STORAGE RING I/O BOX	39
BM7EPS-1	EPS		Photon Shutter A open and closed switches	4
BM7EPS-2	EPS		Photon Shutter B open and closed switches	4
BM7GV2	EPS		GV2 Valve	4

LT-EL-BL-EI-PPS-2070-91

LT-EL-BL-EI (DRAWING DIRECTORY)	LT-EL-BL-EI-PPS-2070-91 (DRAWING NUMBER)	A (REV)
COMPUTER REPRODUCABLE	SCALE: N/A	SHEET 35 OF 35

REV	DESCRIPTION	DATE	BY	CHECKED	APP
A	INITIAL RELEASE	6/9/2017	SEJ	JM	SX

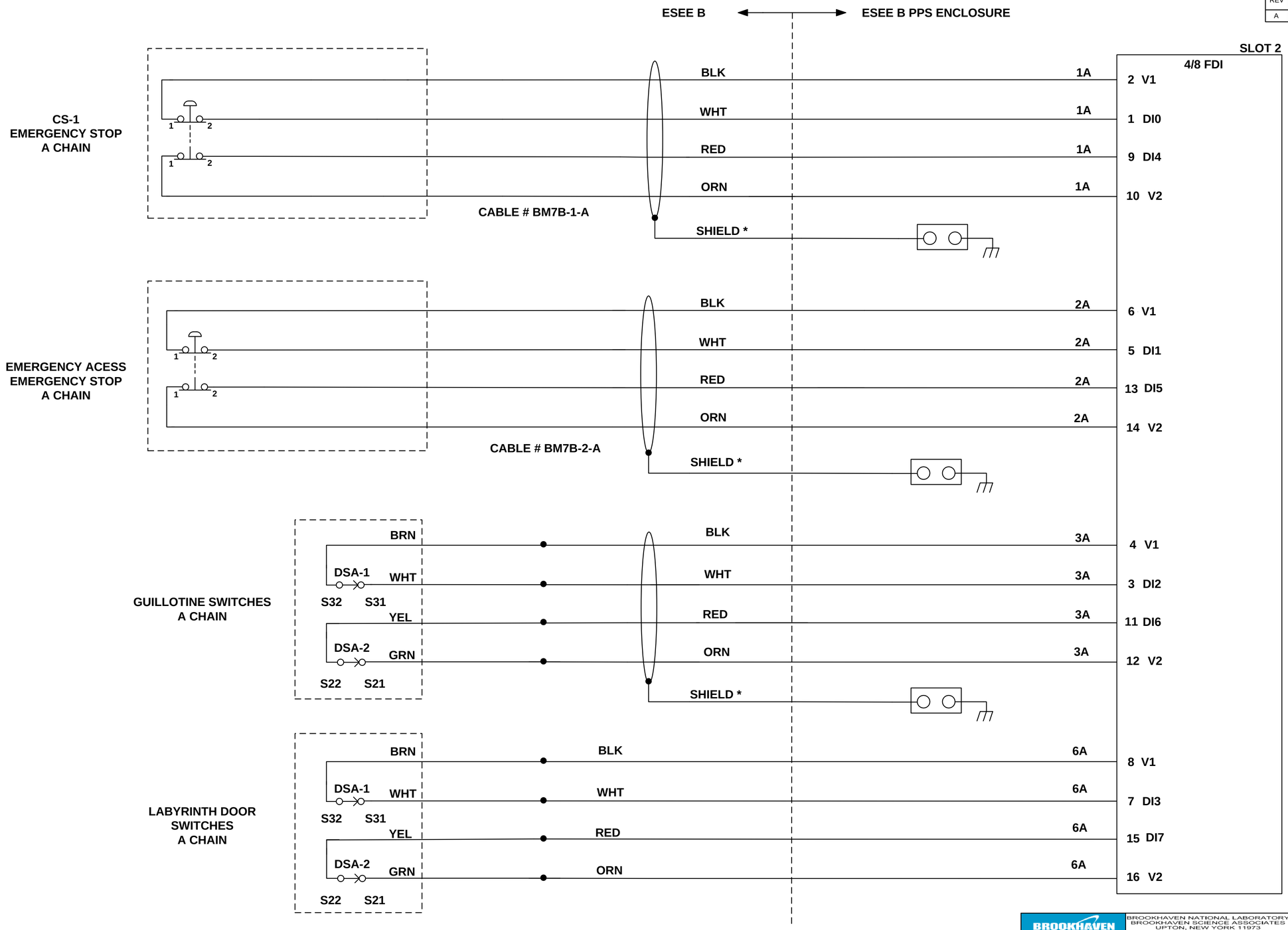

A

LT-EL-SR-EI-PPS-2070-93

* TIE ALL SHIELDS TO CHASSIS GROUND

JOB NUMBER	USED ON DWG. NO.

BROOKHAVEN NATIONAL LABORATORY

BROOKHAVEN NATIONAL LABORATORY
BROOKHAVEN SCIENCE ASSOCIATES
UPTON, NEW YORK 11973
Exploring Life's Mysteries, Protecting its Future

UNLESS OTHERWISE SPECIFIED
INTEGER TOLERANCES ± .06
DECIMAL TOLERANCES
.X ± .030
.XX ± .015
.XXX ± .010
ANGULAR TOLERANCE ± 0.5°
UNSPECIFIED RADII .02 MAX
125 FINISH — BREAK SHARP CORNERS AND EDGES MAX .03 MIN .005

UNLESS OTHERWISE SPECIFIED DIMENSIONS ARE IN INCHES DIMENSIONS IN [**] ARE MILLIMETERS EQUIV. FOR REF. ONLY

ESH&Q RISK LEVEL A-1

INTERPRET DRAWING AS PER ANSI Y14.5 OR Y32.2

OUTSTANDING ECN'S

		DATE
DRWN BY	S. JARZABKOWSKI	6/9/2017
CHK BY	J.MALLEY	6/14/2017
ENG APP	S. Xin	6/13/2017
SUPV APP	G. GANETIS	6/21/2017
QA APP	E.CHESWICK	6/14/2017
ESH APP	R. LEE	6/14/2017

NSLS II NATIONAL SYNCHROTRON LIGHT SOURCE II

WIRING DIAGRAM, 7-BM-B (QAS-B HUTCH) A CHAIN AND B CHAIN

DRAWING DIRECTORY	DRAWING NUMBER	REV
LT-EL-BL-EI	LT-EL-BL-EI-PPS-2070-93	A

COMPUTER REPRODUCABLE | SCALE: N/A | SHEET 1 OF 21

REV	DESCRIPTION	DATE	BY	CHECKED	APP
	SEE SHEET 1				

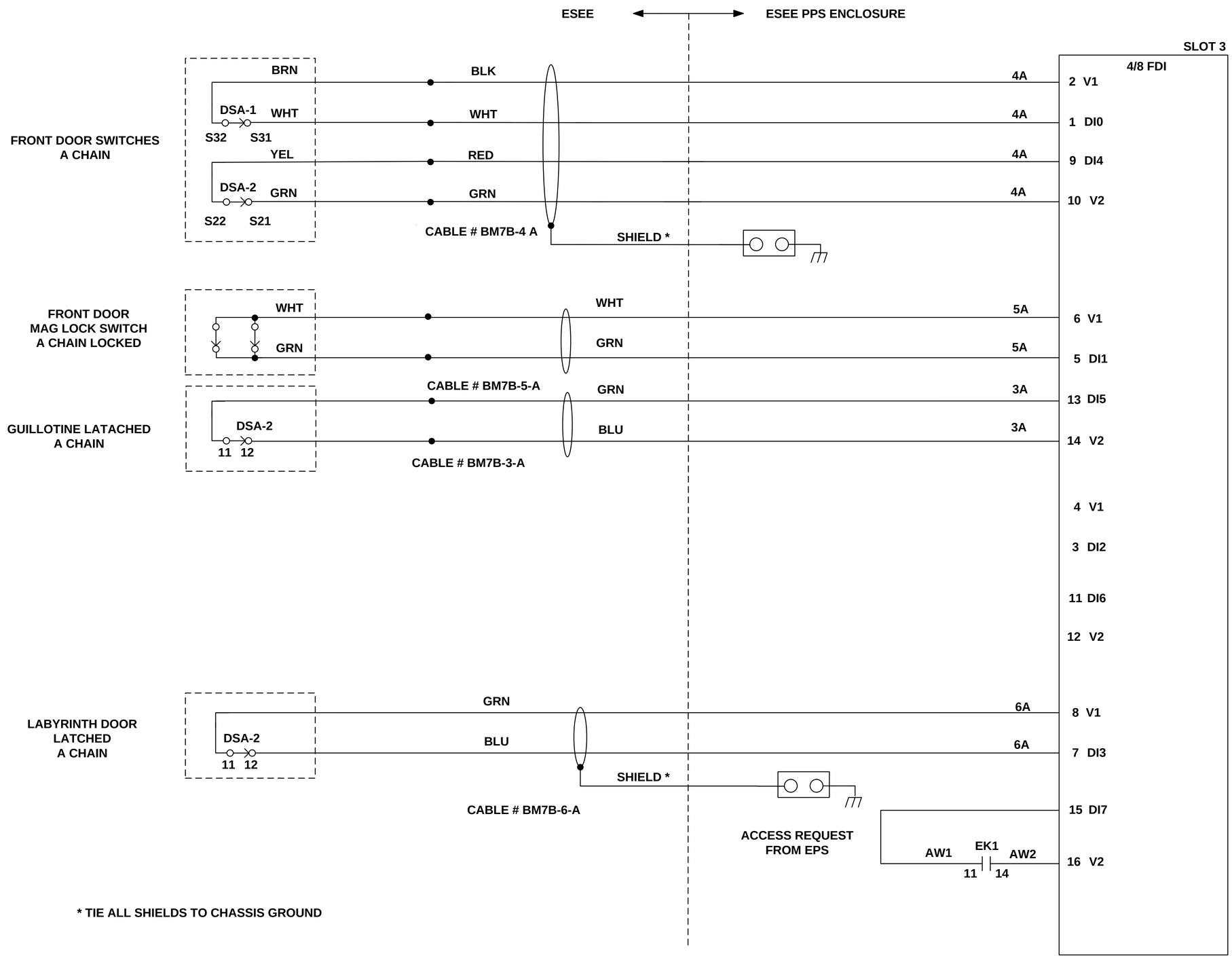

* TIE ALL SHIELDS TO CHASSIS GROUND

A

LT-EL-BL-EI (DRAWING DIRECTORY)	LT-EL-SR-EI-PPS-2070-93 (DRAWING NUMBER)	A (REV)
COMPUTER REPRODUCABLE	SCALE: N/A	SHEET 2 OF 21

LT-EL-SR-EI-PPS-2070-93

REV	DESCRIPTION	DATE	BY	CHECKED	APP
	SEE SHEET 1				

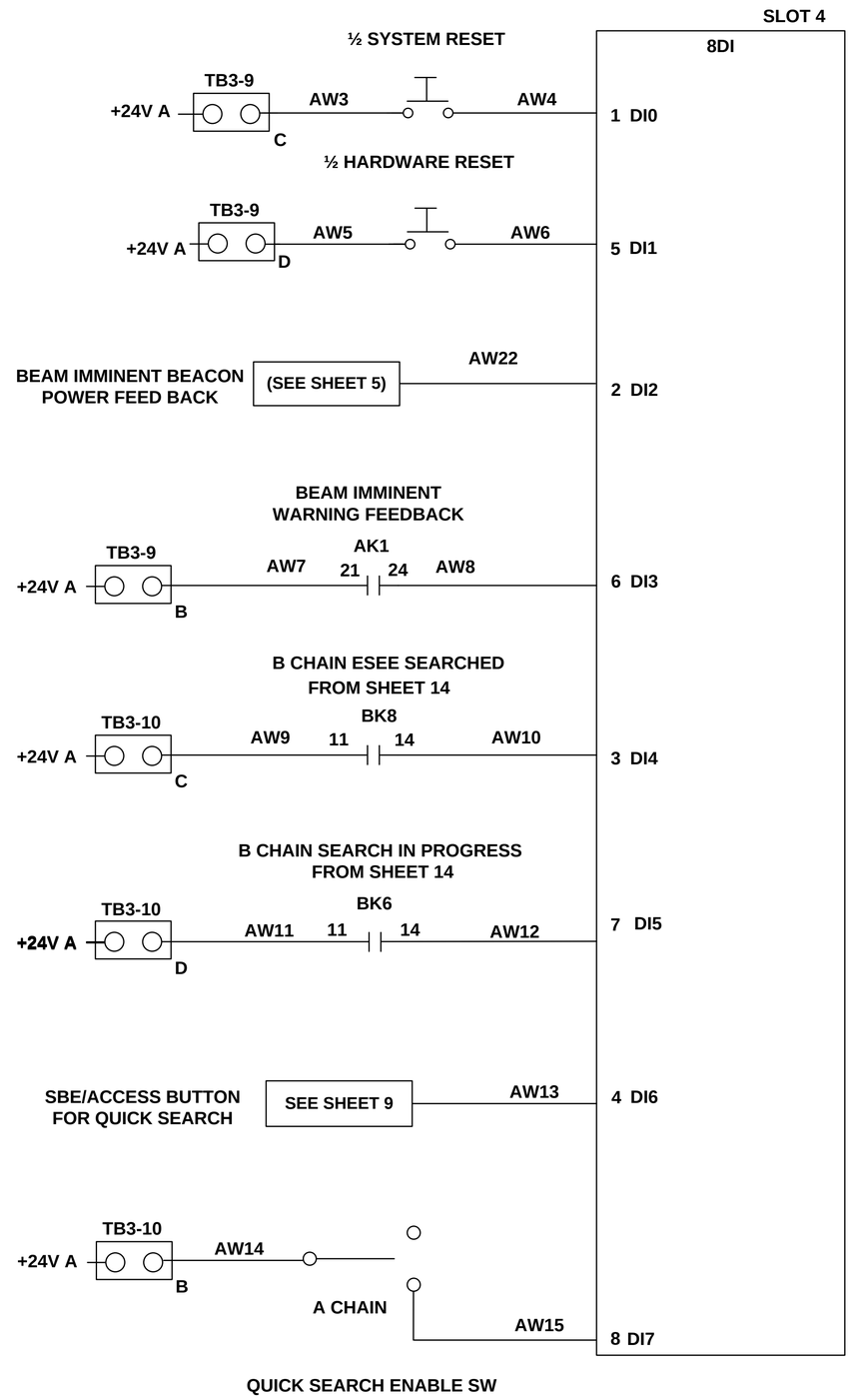

A

LT-EL-BL-EI (DRAWING DIRECTORY)	LT-EL-SR-EI-PPS-2070-93 (DRAWING NUMBER)	A (REV)
COMPUTER REPRODUCABLE	SCALE: N/A	SHEET 3 OF 21

LT-EL-SR-EI-PPS-2070-93

REV	DESCRIPTION	DATE	BY	CHECKED	APP
	SEE SHEET 1				

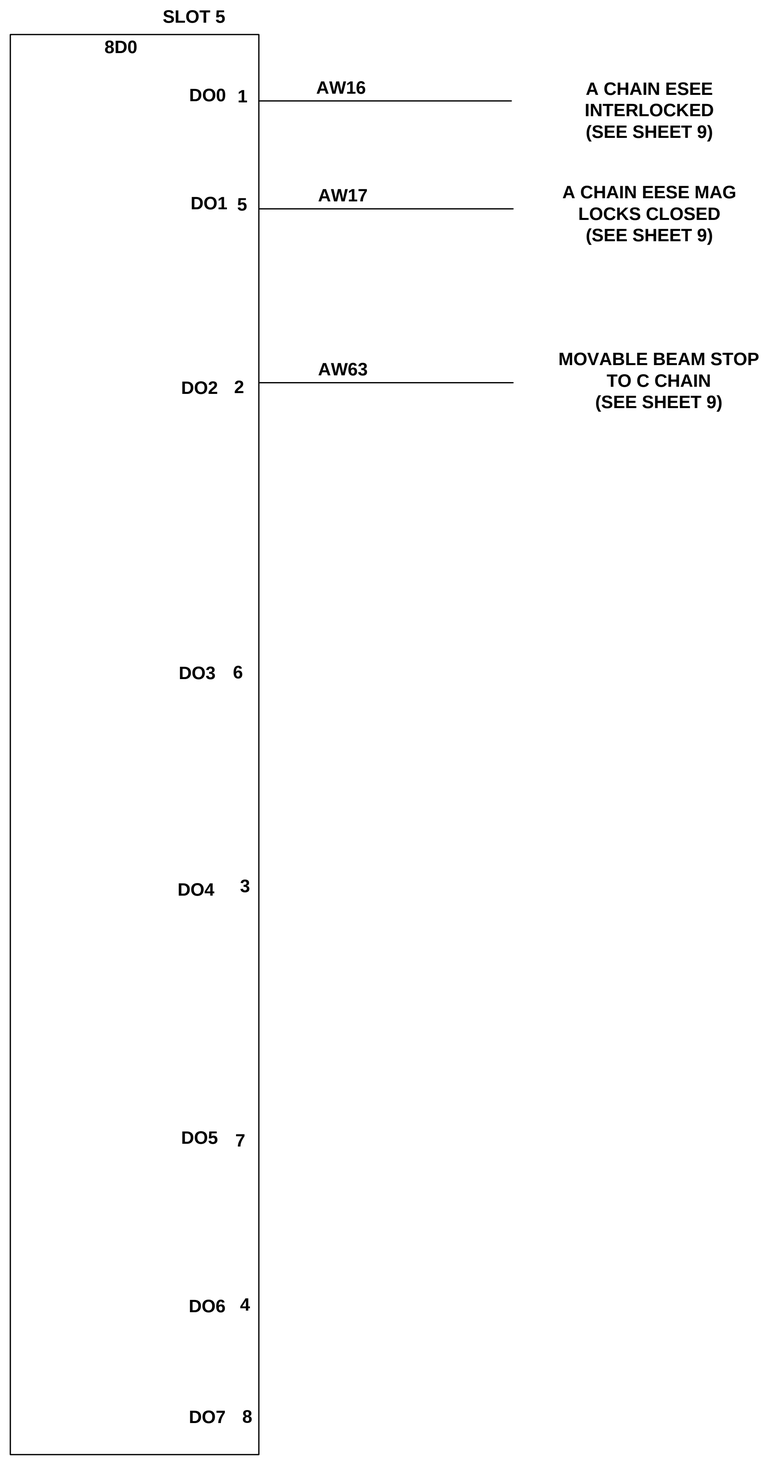

A

LT-EL-BL-EI (DRAWING DIRECTORY)	LT-EL-SR-EI-PPS-2070-93 (DRAWING NUMBER)	A (REV)
COMPUTER REPRODUCABLE	SCALE: N/A	SHEET 4 OF 21

LT-EL-SR-EI-PPS-2070-93

REV	DESCRIPTION	DATE	BY	CHECKED	APP
	SEE SHEET 1				

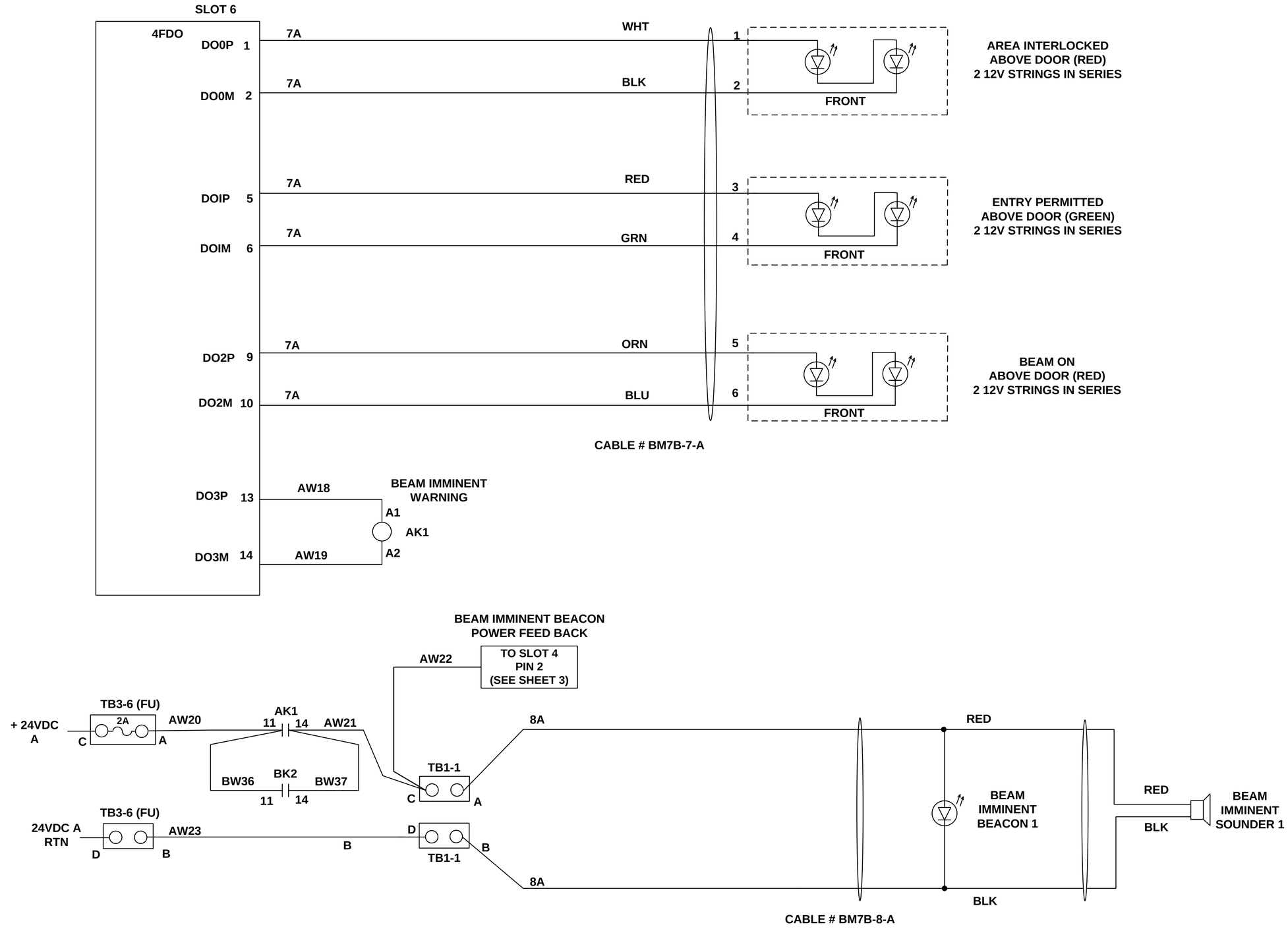

* TIE ALL SHIELDS TO CHASSIS GROUND

A

LT-EL-BL-EI (DRAWING DIRECTORY)	LT-EL-SR-EI-PPS-2070-93 (DRAWING NUMBER)	A (REV)
COMPUTER REPRODUCABLE	SCALE: N/A	SHEET 5 OF 21

LT-EL-SR-EI-PPS-2070-93

REV	DESCRIPTION	DATE	BY	CHECKED	APP
	SEE SHEET 1				

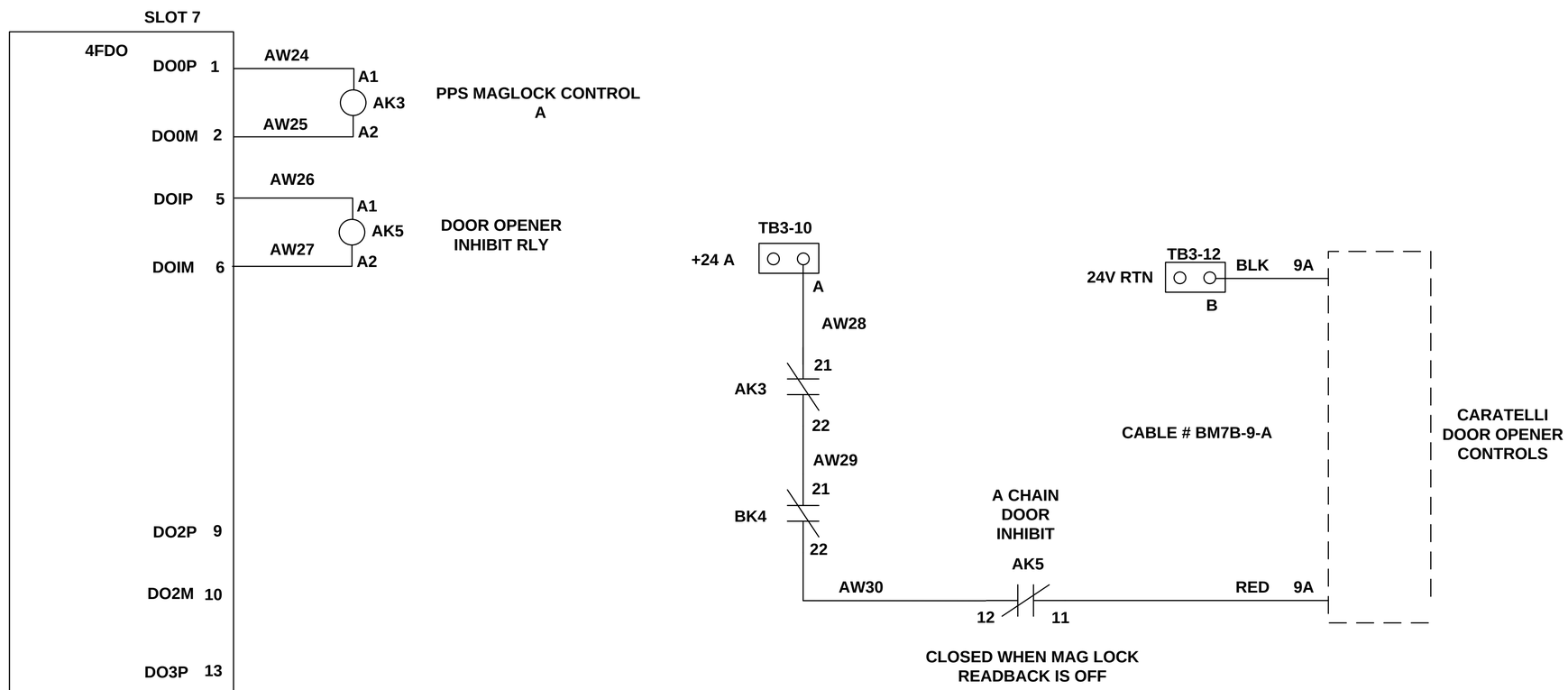

A

LT-EL-BL-EI (DRAWING DIRECTORY)	LT-EL-SR-EI-PPS-2070-93 (DRAWING NUMBER)	A (REV)
COMPUTER REPRODUCABLE	SCALE: N/A	SHEET 6 OF 21

LT-EL-SR-EI-PPS-2070-93

REV	DESCRIPTION	DATE	BY	CHECKED	APP
	SEE SHEET 1				

DOOR MAG LOCK

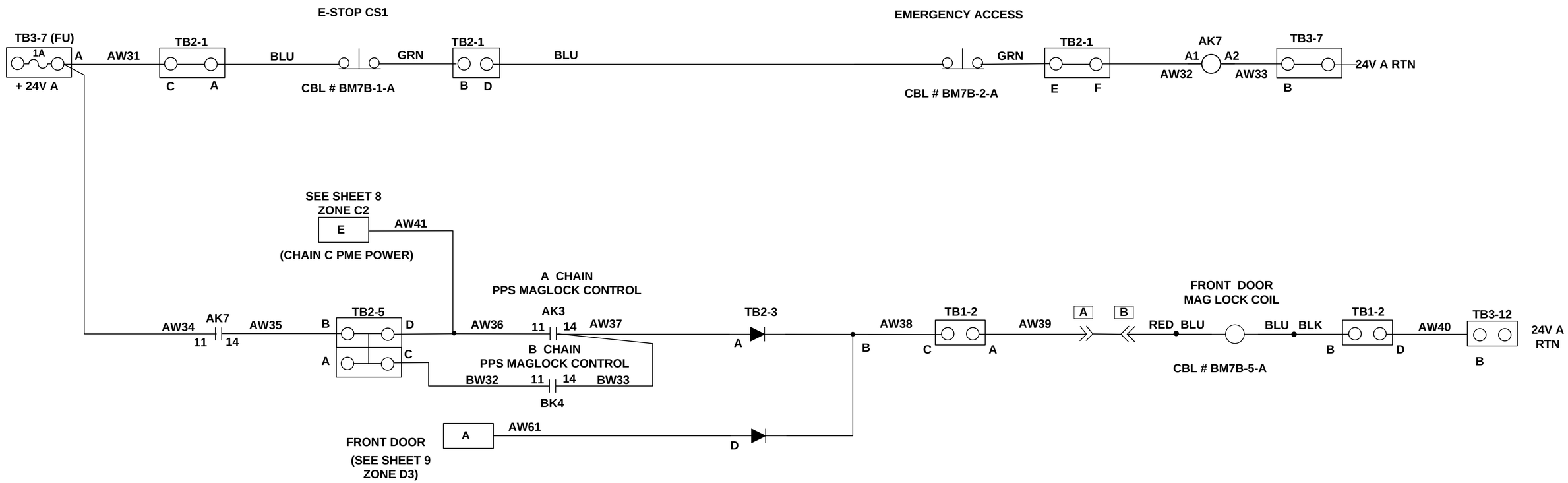

A

LT-EL-BL-EI	LT-EL-SR-EI-PPS-2070-93	A
DRAWING DIRECTORY	DRAWING NUMBER	REV

COMPUTER REPRODUCABLE | SCALE: N/A | SHEET 7 OF 21

LT-EL-SR-EI-PPS-2070-93

REV	DESCRIPTION	DATE	BY	CHECKED	APP
	SEE SHEET 1				

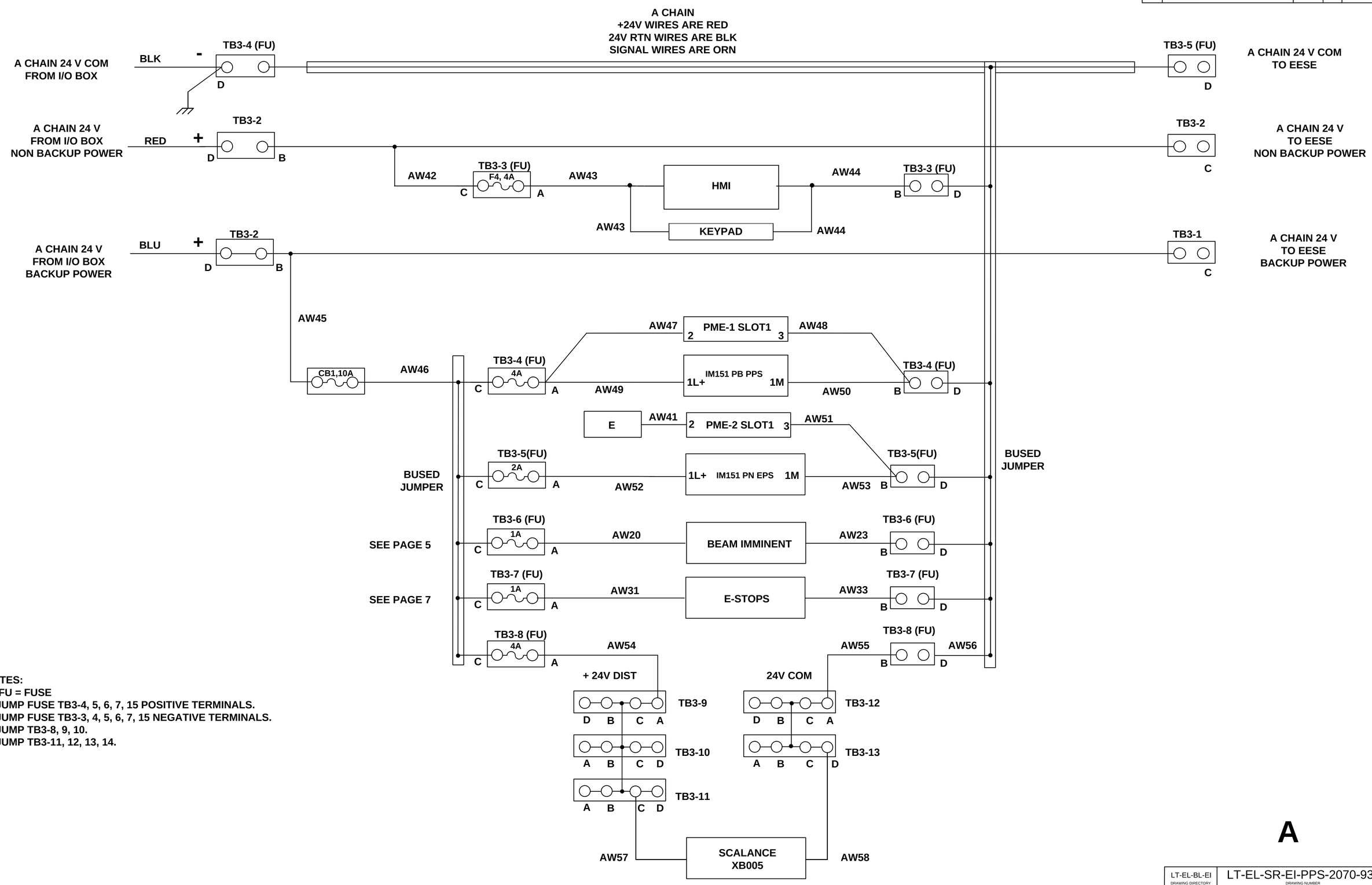

NOTES:
1. FU = FUSE
2. JUMP FUSE TB3-4, 5, 6, 7, 15 POSITIVE TERMINALS.
3. JUMP FUSE TB3-3, 4, 5, 6, 7, 15 NEGATIVE TERMINALS.
4. JUMP TB3-8, 9, 10.
5. JUMP TB3-11, 12, 13, 14.

A

LT-EL-BL-EI (DRAWING DIRECTORY)	LT-EL-SR-EI-PPS-2070-93 (DRAWING NUMBER)	A (REV)
COMPUTER REPRODUCABLE	SCALE: N/A	SHEET 8 OF 21

LT-EL-SR-EI-PPS-2070-93

REV	DESCRIPTION	DATE	BY	CHECKED	APP
	SEE SHEET 1				

EPS

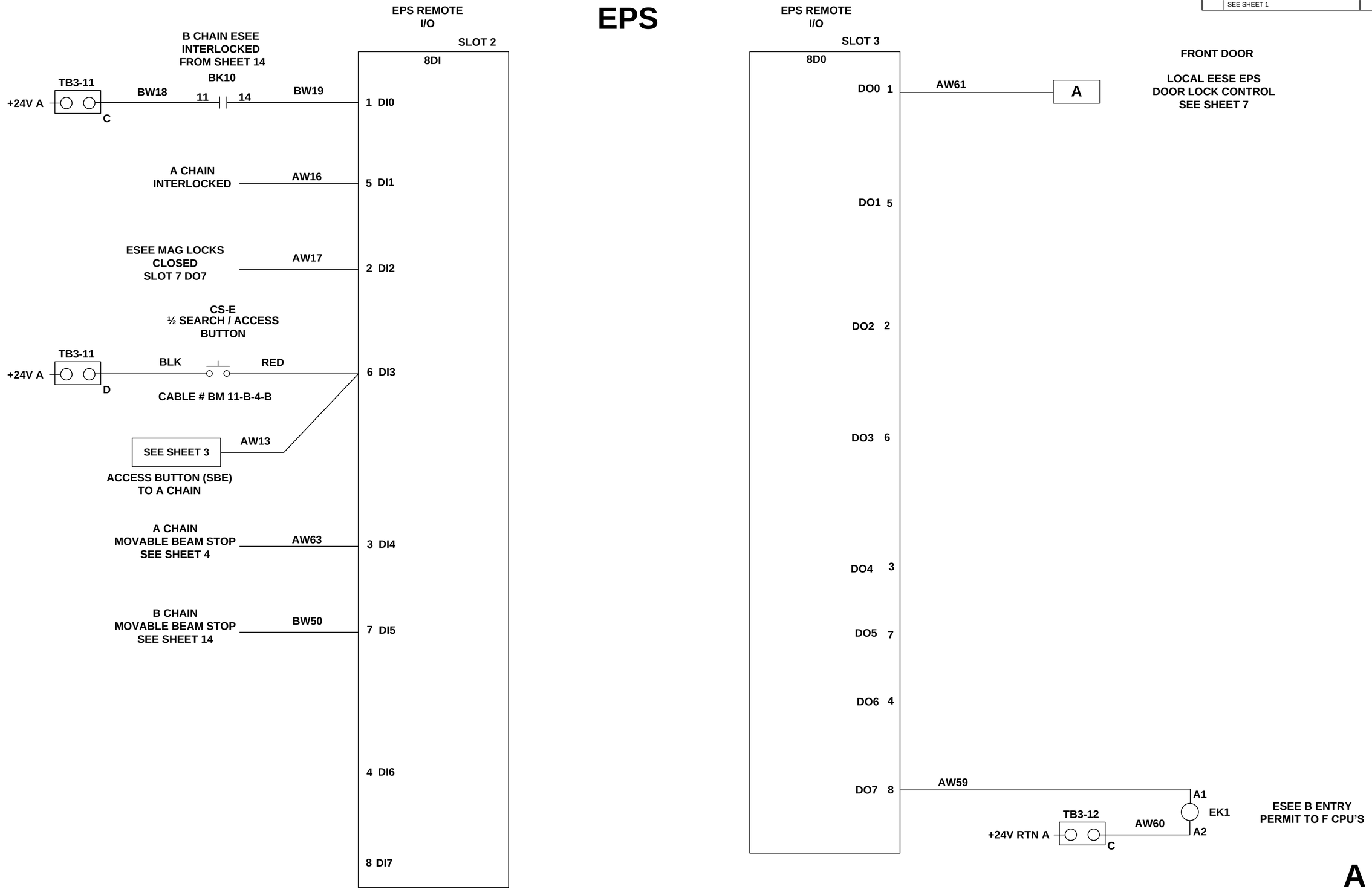

A

LT-EL-BL-EI (DRAWING DIRECTORY)	LT-EL-SR-EI-PPS-2070-93 (DRAWING NUMBER)	A (REV)
COMPUTER REPRODUCABLE	SCALE: N/A	SHEET 9 OF 21

LT-EL-SR-EI-PPS-2070-93

REV	DESCRIPTION	DATE	BY	CHECKED	APP
	SEE SHEET 1				

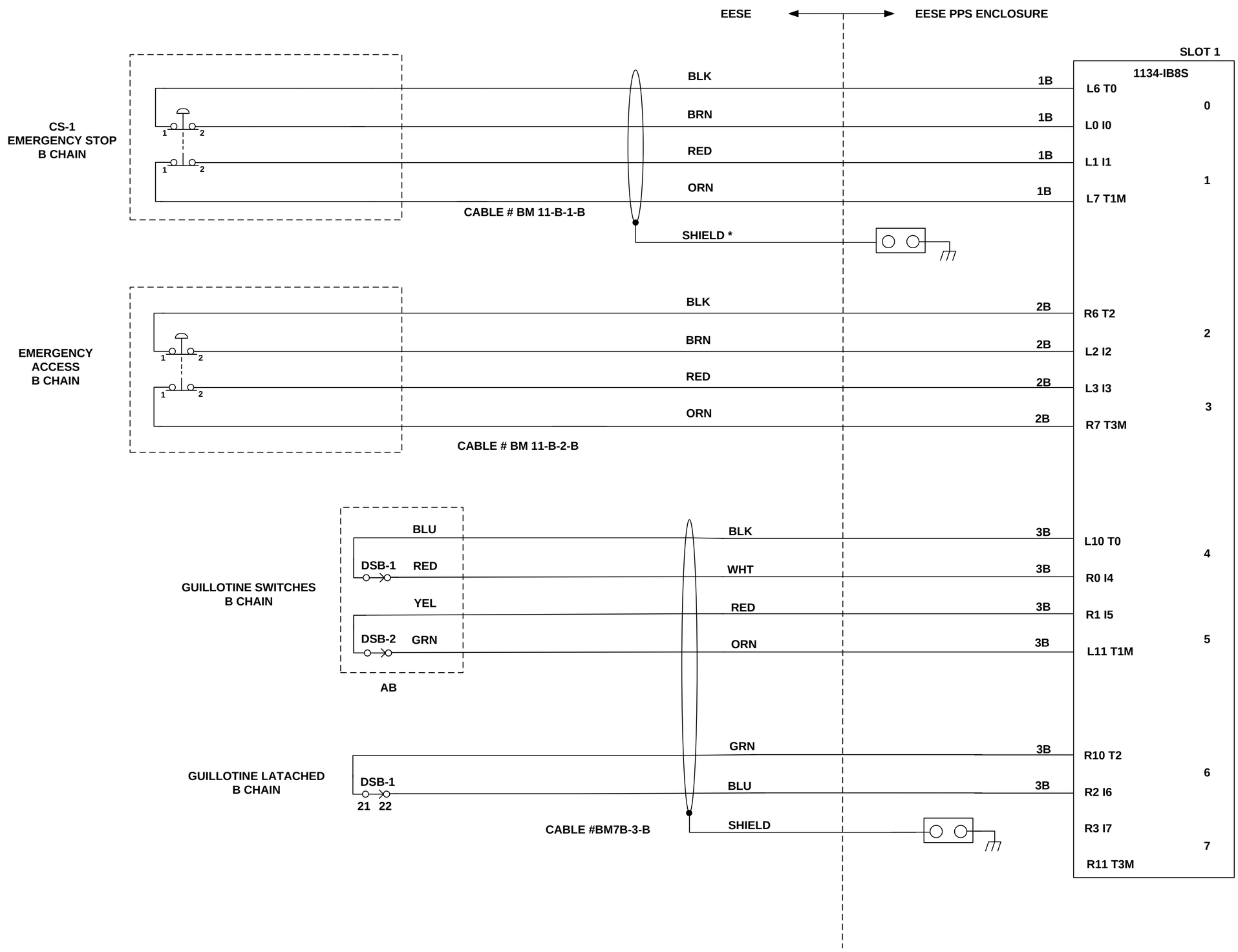

*** TIE ALL SHIELDS TO CHASSIS GROUND**

B

LT-EL-BL-EI (DRAWING DIRECTORY)	LT-EL-SR-EI-PPS-2070-93 (DRAWING NUMBER)	A (REV)
COMPUTER REPRODUCABLE	SCALE: N/A	SHEET 10 OF 21

LT-EL-SR-EI-PPS-2070-93

REV	DESCRIPTION	DATE	BY	CHECKED	APP
	SEE SHEET 1				

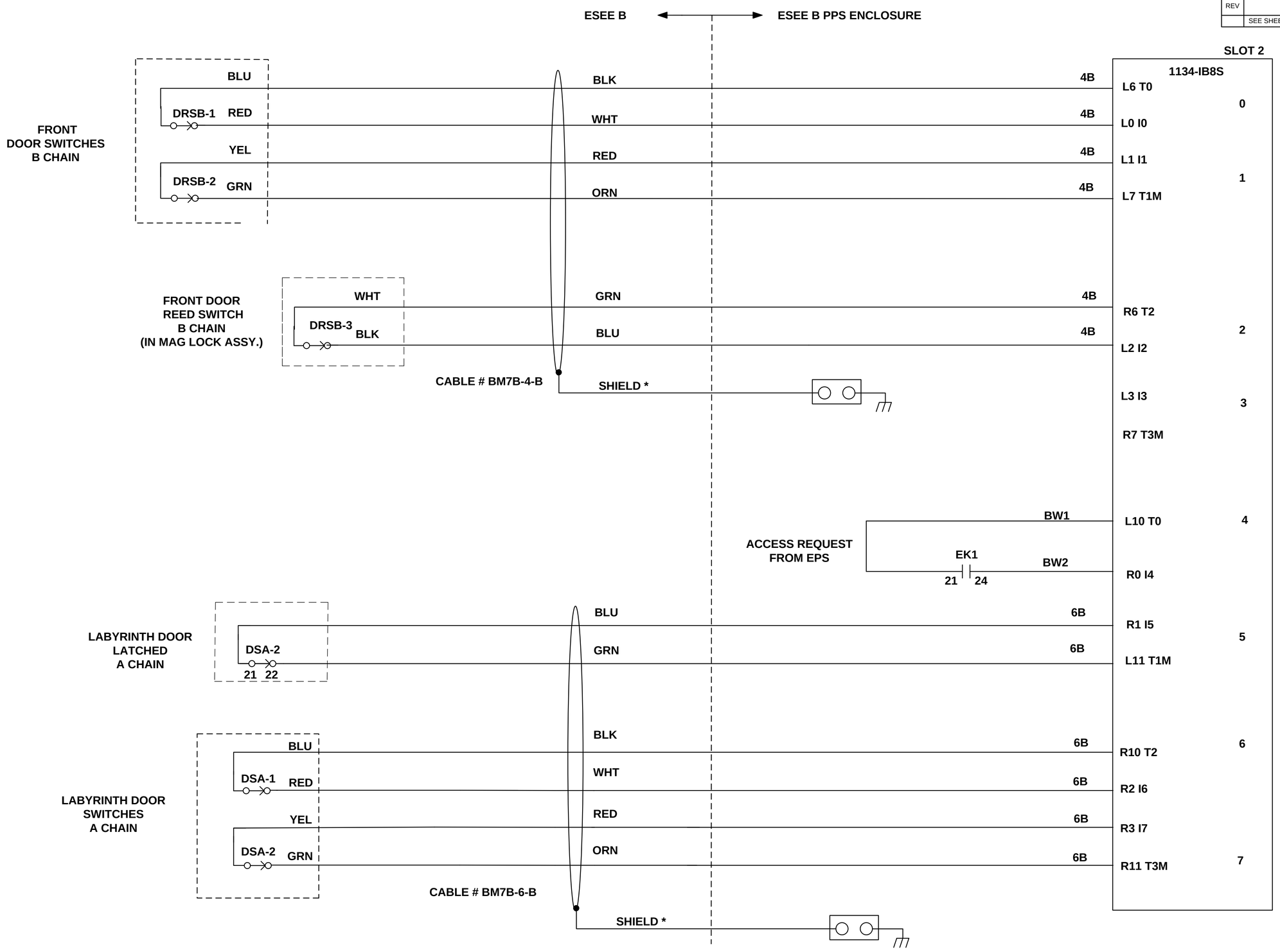

B

* TIE ALL SHIELDS TO CHASSIS GROUND

LT-EL-BL-EI (DRAWING DIRECTORY)	LT-EL-SR-EI-PPS-2070-93 (DRAWING NUMBER)	A (REV)
COMPUTER REPRODUCABLE	SCALE: N/A	SHEET 11 OF 21

LT-EL-SR-EI-PPS-2070-93

REV	DESCRIPTION	DATE	BY	CHECKED	APP
	SEE SHEET 1				

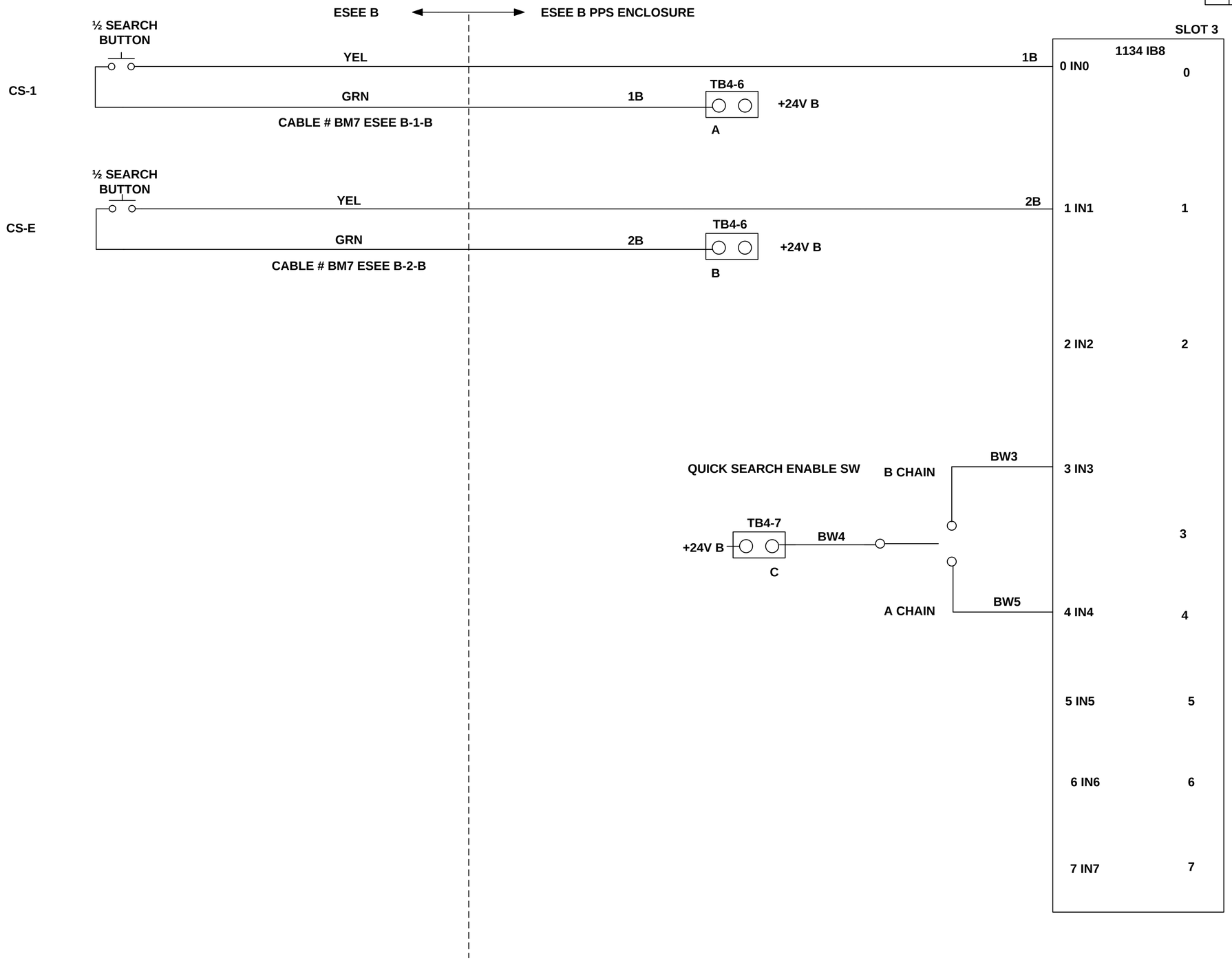

B

LT-EL-BL-EI (DRAWING DIRECTORY)	LT-EL-SR-EI-PPS-2070-93 (DRAWING NUMBER)	A (REV)
COMPUTER REPRODUCABLE	SCALE: N/A	SHEET 12 OF 21

LT-EL-SR-EI-PPS-2070-93

REV	DESCRIPTION	DATE	BY	CHECKED	APP
	SEE SHEET 1				

ESEE B PPS ENCLOSURE

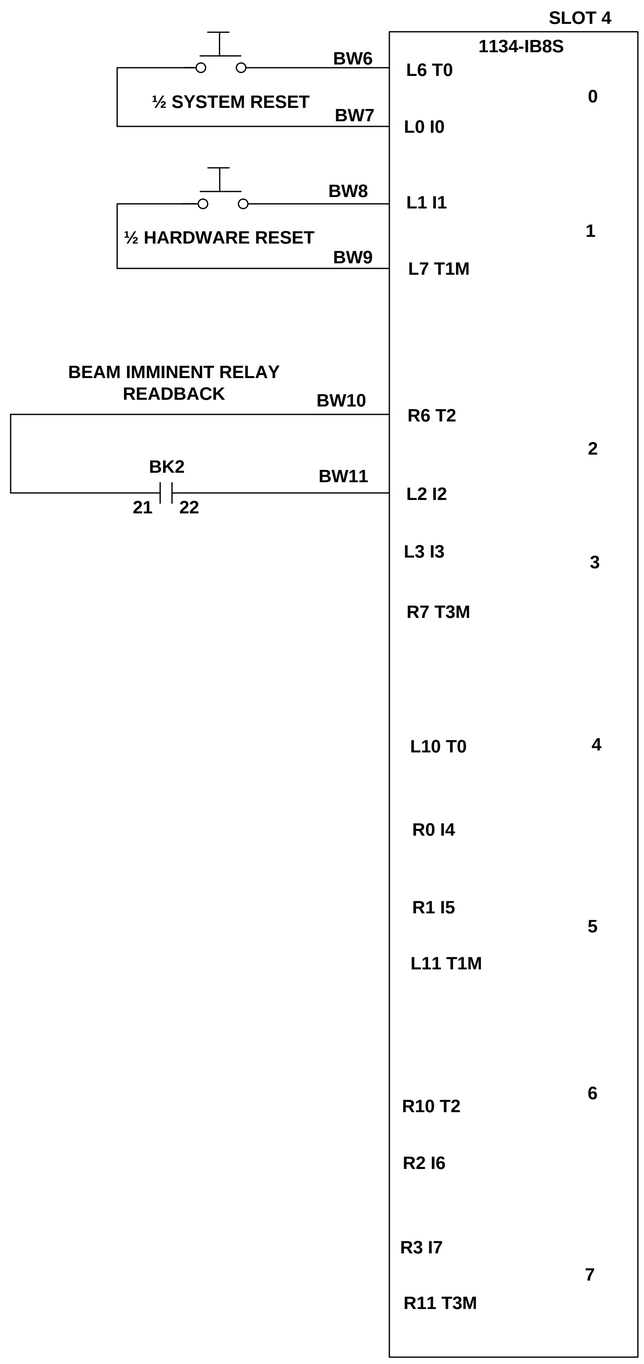

B

LT-EL-BL-EI (DRAWING DIRECTORY)	LT-EL-SR-EI-PPS-2070-93 (DRAWING NUMBER)	A (REV)
COMPUTER REPRODUCABLE	SCALE: N/A	SHEET 13 OF 21

LT-EL-SR-EI-PPS-2070-93

REV	DESCRIPTION	DATE	BY	CHECKED	APP
	SEE SHEET 1				

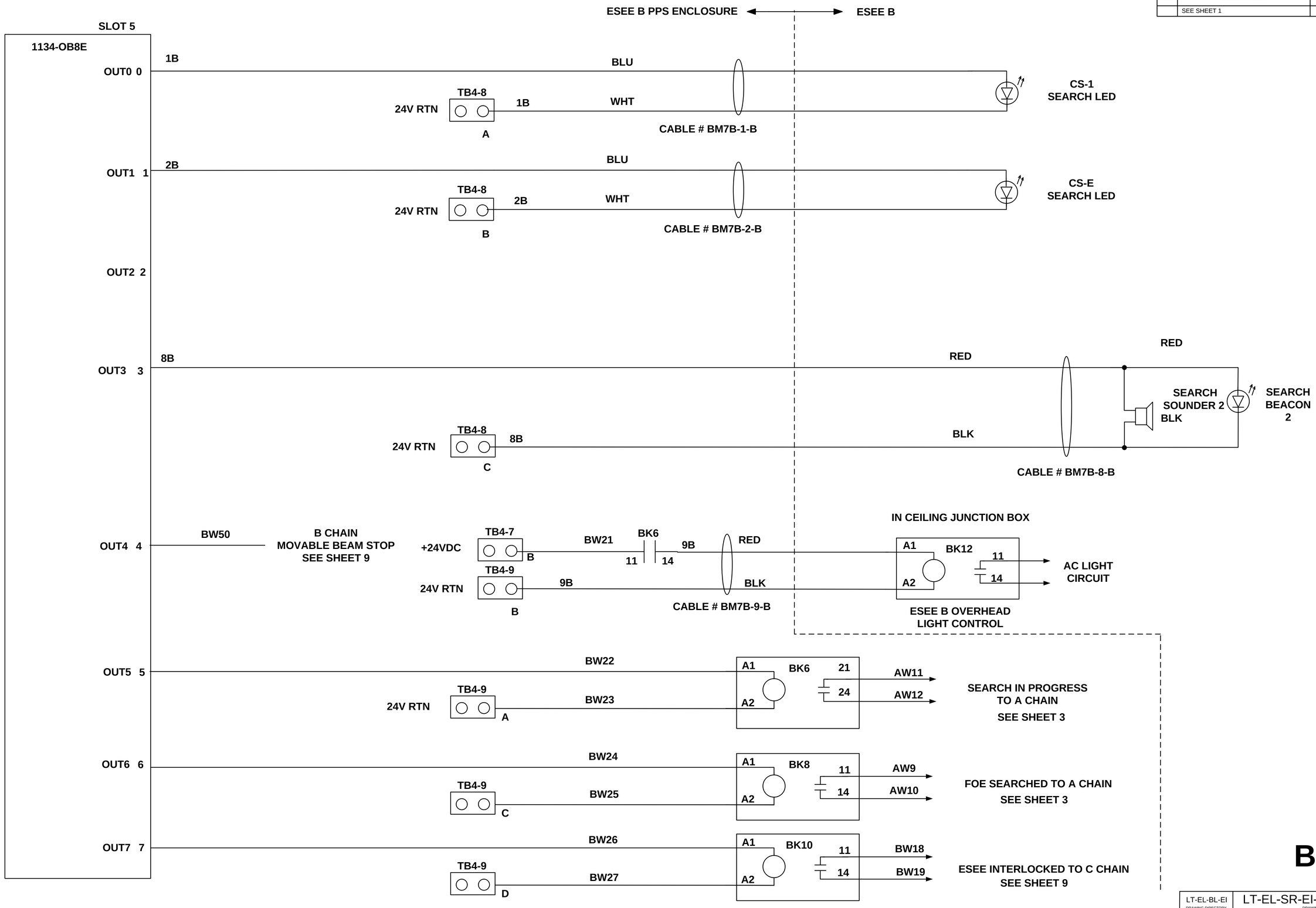

B

LT-EL-BL-EI (DRAWING DIRECTORY)	LT-EL-SR-EI-PPS-2070-93 (DRAWING NUMBER)	A (REV)
COMPUTER REPRODUCABLE	SCALE: N/A	SHEET 14 OF 21

LT-EL-SR-EI-PPS-2070-93

REV	DESCRIPTION	DATE	BY	CHECKED	APP
	SEE SHEET 1				

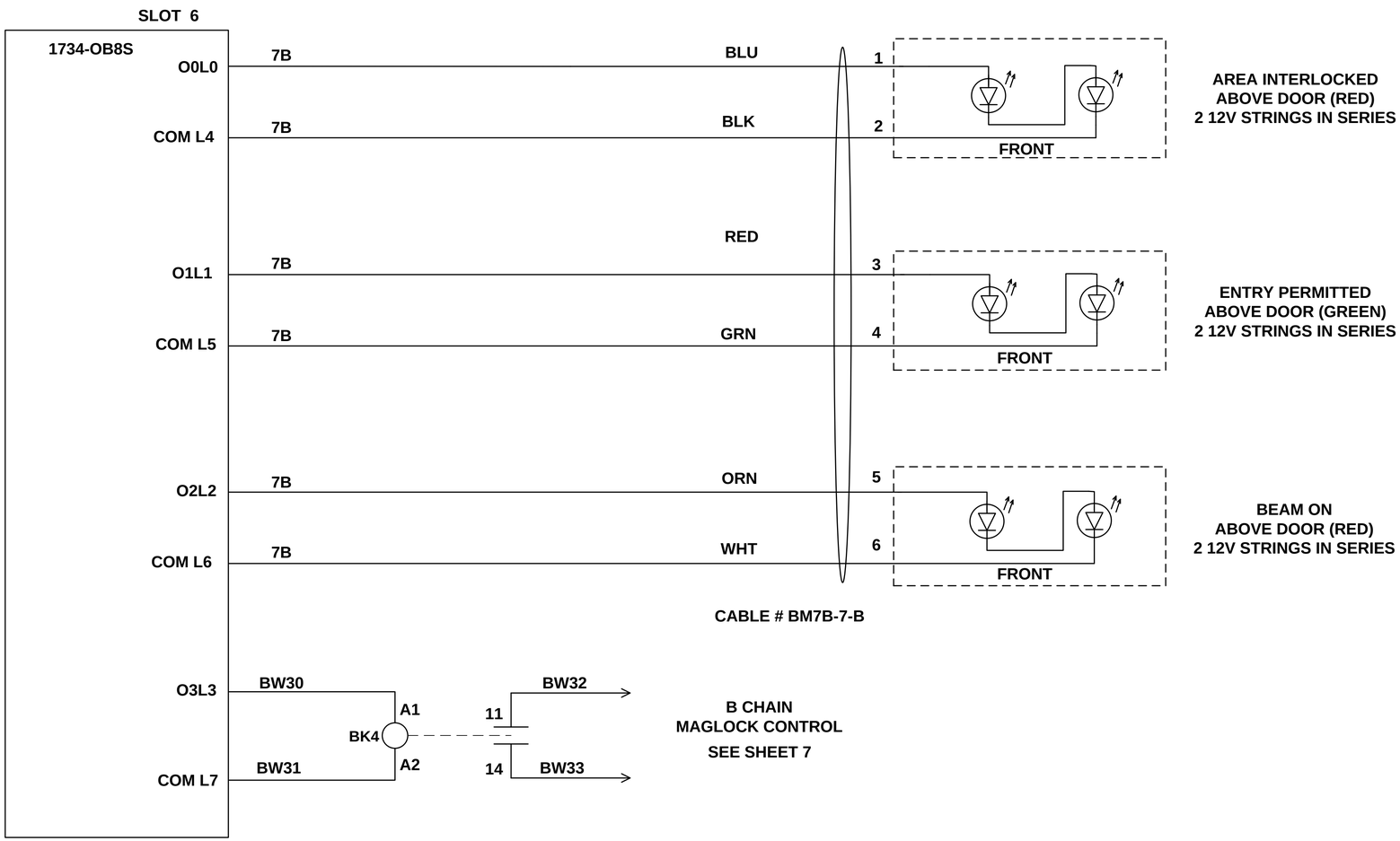

B

LT-EL-BL-EI (DRAWING DIRECTORY)	LT-EL-SR-EI-PPS-2070-93 (DRAWING NUMBER)	A (REV)
COMPUTER REPRODUCABLE	SCALE: N/A	SHEET 15 OF 21

LT-EL-SR-EI-PPS-2070-93

REV	DESCRIPTION	DATE	BY	CHECKED	APP
	SEE SHEET 1				

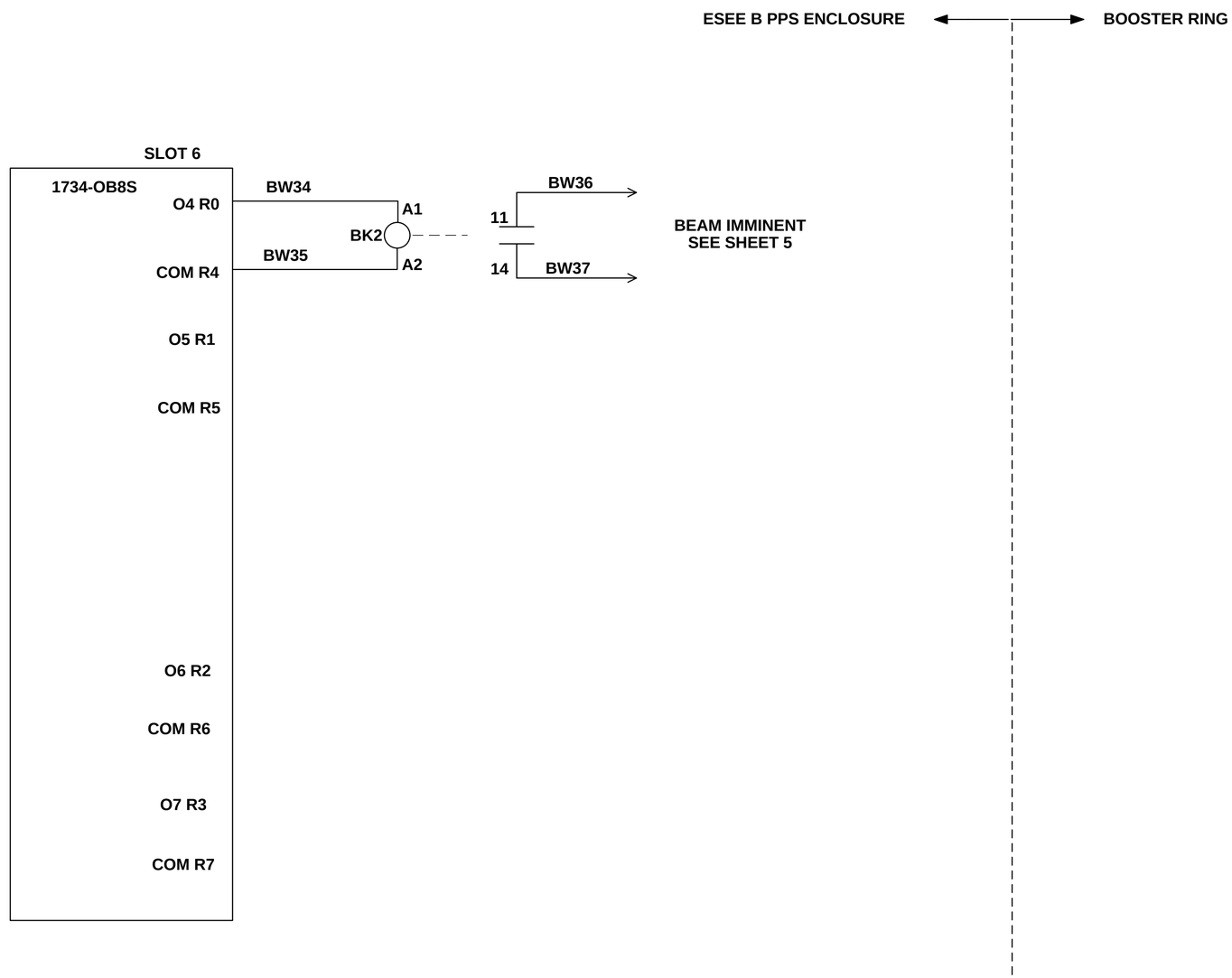

B

LT-EL-BL-EI DRAWING DIRECTORY	LT-EL-SR-EI-PPS-2070-93 DRAWING NUMBER	A REV
COMPUTER REPRODUCABLE	SCALE: N/A	SHEET 16 OF 21

LT-EL-SR-EI-PPS-2070-93

REV	DESCRIPTION	DATE	BY	CHECKED	APP
	SEE SHEET 1				

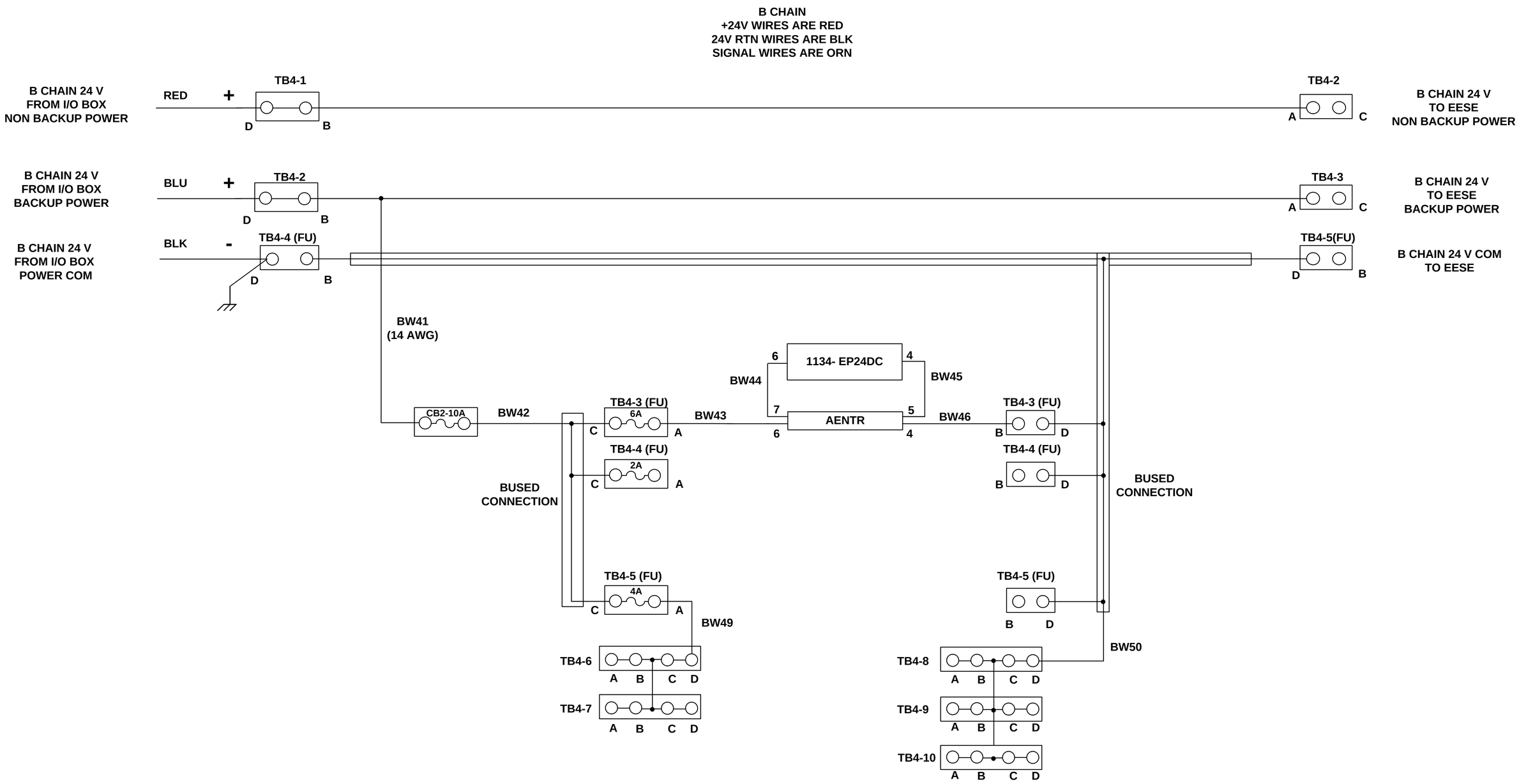

B

LT-EL-BL-EI (DRAWING DIRECTORY)	LT-EL-SR-EI-PPS-2070-93 (DRAWING NUMBER)	A (REV)
COMPUTER REPRODUCABLE	SCALE: N/A	SHEET 17 OF 21

LT-EL-SR-EI-PPS-2070-93

REV	DESCRIPTION	DATE	BY	CHECKED	APP
	SEE SHEET 1				

7-BM NETWORK LAYOUT

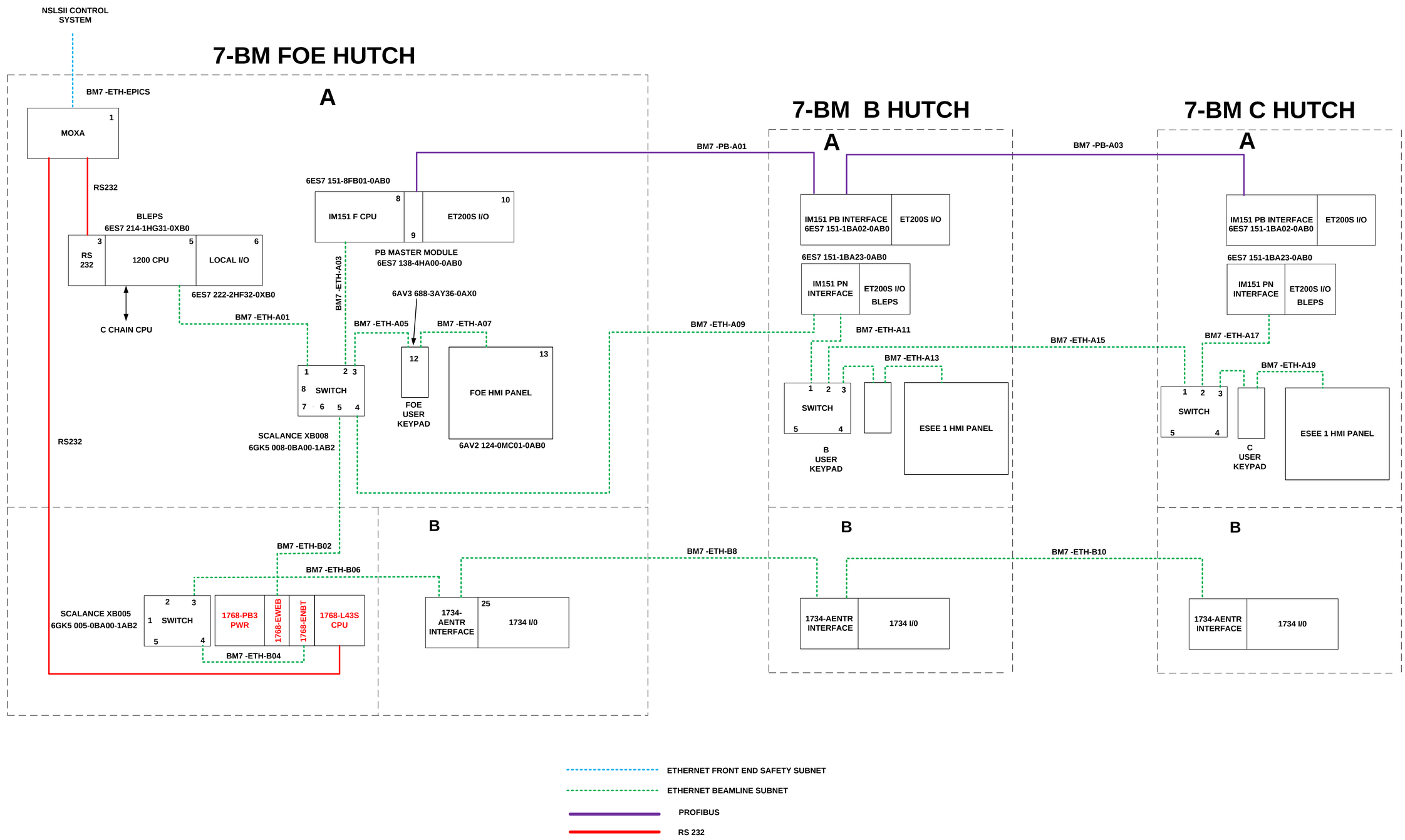

LT-EL-BL-EI (DRAWING DIRECTORY)	LT-EL-SR-EI-PPS-2070-93 (DRAWING NUMBER)	A (REV)
COMPUTER REPRODUCABLE	SCALE: N/A	SHEET 18 OF 21

LT-EL-SR-EI-PPS-2070-93

REV	DESCRIPTION	DATE	BY	CHECKED	APP
	SEE SHEET 1				

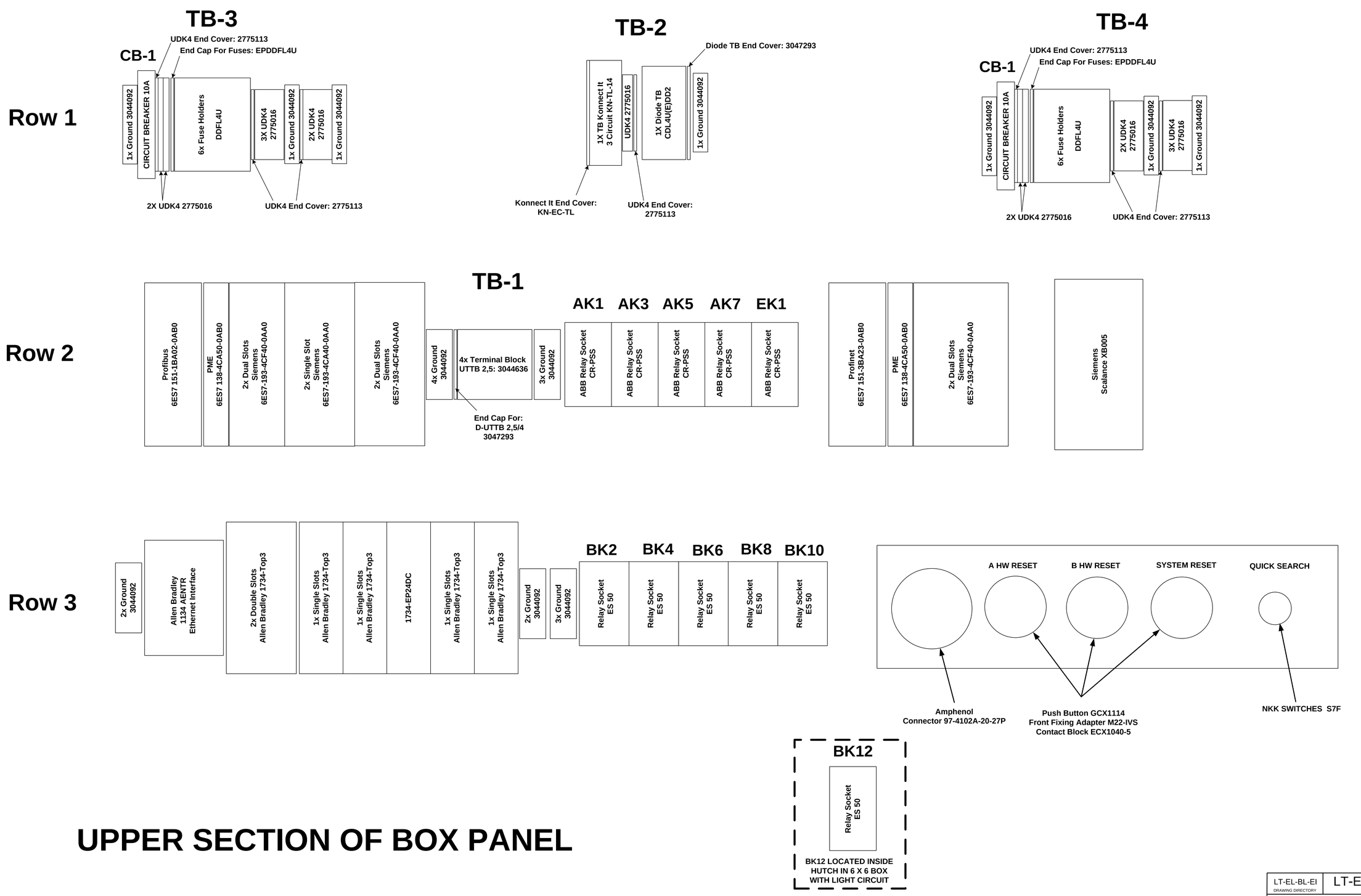

UPPER SECTION OF BOX PANEL

LT-EL-BL-EI (DRAWING DIRECTORY)	LT-EL-SR-EI-PPS-2070-93 (DRAWING NUMBER)	A (REV)
COMPUTER REPRODUCABLE	SCALE: N/A	SHEET 19 OF 21

LT-EL-SR-EI-PPS-2070-93

REV	DESCRIPTION	DATE	BY	CHECKED	APP
	SEE SHEET 1				

ROW 1:						
	[20]					
	[2]					
CB 1	WMZS1B10	N/A	Circuit Breaker B10	Eaton		
TB 3	[19]	x2 [13]	[6]	x6 [8]		
	[19]	x3 [13]	[2]	[19]	x4 [13]	[2]
TB 5	[15]	x1 [14]	[19]	[13]	x1 [16]	[17]
	[20]					
	[2]					
CB 2	WMZS1B10	N/A	Circuit Breaker B10	Eaton		
TB 4	[19]	x2 [13]	[6]	x4 [8]		
	[19]	x3 [13]	[2]	[19]	x3 [13]	[2]
ROW 2:						
SLOT	MODULE	SOCKET	DESCRIPTION	VENDOR		
	6ES7-151-1BA02-0AB0	N/A	DP INTERFACE	SIEMENS		
1	6ES7-138-4CA50-0AB0	6ES7-193-4CC20-0AA0	POWER MODULE PM-E	SIEMENS		
2	6ES7-138-4FA04-0AB0	6ES7-193-4CF40-0AA0	4/8FDI SAFETY INPUT	SIEMENS		
3	6ES7-138-4FA04-0AB0	6ES7-193-4CF40-0AA0	4/8FDI SAFETY INPUT	SIEMENS		
4	6ES7-131-4BF00-0AB0	6ES7-193-4CA40-0AA0	8DI STANDARD IN	SIEMENS		
5	6ES7-132-4BF00-0AA0	6ES7-193-4CA40-0AA0	8DO STANDARD OUT	SIEMENS		
6	6ES7-138-4FB03-0AB0	6ES7-193-4CF40-0AA0	4FDO SAFETY OUTPUT	SIEMENS		
7	6ES7-138-4FB03-0AB0	6ES7-193-4CF40-0AA0	4FDO SAFETY OUTPUT	SIEMENS		
8	6ES7-193-4JA00-0AA0	N/A	SOCKET COVER	SIEMENS		
TB 1	[2]	[2]	[3]	x81 [1]	[2]	[2]
RELAY	MODULE	SOCKET	DESCRIPTION	VENDOR		
AK1	OW5669.12/983/61	RT 78626	RELAY	ALTECH/DOLD		
AK3	OW5669.12/983/61	RT 78626	RELAY	ALTECH/DOLD		
AK5	OW5669.12/983/61	RT 78626	RELAY	ALTECH/DOLD		
AK7	OW5669.12/983/61	RT 78626	RELAY	ALTECH/DOLD		
EK1	OW5669.12/983/61	RT 78626	RELAY	ALTECH/DOLD		
	6ES7-151-3BA23-0AB0	N/A	PN INTERFACE	SIEMENS		
1	6ES7-138-4CA50-0AB0	6ES7-193-4CC20-0AA0	POWER MODULE PM-E	SIEMENS		
2	6ES7-131-4BF00-0AB0	6ES7-193-4CA40-0AA0	8DI STANDARD IN	SIEMENS		
3	6ES7-132-4BF00-0AA0	6ES7-193-4CA40-0AA0	8DO STANDARD OUT	SIEMENS		
	6GK50050BA001AB2	N/A	6 PORT SWITCH	SIEMENS		

ROW 3:				
SLOT	MODULE	SOCKET	DESCRIPTION	VENDOR
	1734-AENTR	N/A	24V DC EHTERNET ADAPTER	AB
1	1734-IB8S	1734-TOP3 (2)	8 INPUT SAFETY	AB
2	1734-IB8S	1734-TOP3 (2)	8 INPUT SAFETY	AB
3	1734-IB8	1734-TOP3	STANDARD 8 INPUT MODULE	AB
4	1734-IB8S	1734-TOP3	8 INPUT SAFETY	AB
5	1734-OB8E	1734-TOP3	8 CURRENT SOURCE OUTPUT	AB
6	1734-OB8S	1734-TOP3 (2)	8 OUTPUT SAFETY	AB
	[2]	[2]		
RELAY	MODULE	SOCKET	DESCRIPTION	VENDOR
BK2	SGR282Z	RT 78626	RELAY	SHRACK
BK4	SGR282Z	RT 78626	RELAY	SHRACK
BK6	SGR282Z	RT 78626	RELAY	SHRACK
BK8	SGR282Z	RT 78626	RELAY	SHRACK
BK10	SGR282Z	RT 78626	RELAY	SHRACK
BK12	SGR282Z	RT 78626	RELAY	SHRACK
	[2]	[2]		
TEST CONNECTOR	A HW RESET BTN	SYSTEM RESET BTN	B HW RESET BTN	QUICK SERCH SW

	A CHAIN RELAYS
AK1	A CHAIN BEAM IMMINENT WARNING
AK3	A CHAIN MAG LOCK CONTROL
AK5	A CHAIN DOOR OPENER INHIBIT
AK7	E STOP HARDWIRE RELAY
	B CHAIN RELAYS
BK2	B CHAIN BEAM IMMINENT RELAY
BK4	B CHAIN MAG LOCK RELAY
BK6	B CHAIN SEARCH IN PROGRESS
BK8	B CHAIN ESEE SEARCHED
BK10	B CHAIN ESEE INTERLOCKED
BK12	OVERHEAD LIGHT CONTROL
EK1	ACCESS REQUEST FROM EPS

LT-EL-SR-EI-PPS-2070-93

LT-EL-BL-EI (DRAWING DIRECTORY)	LT-EL-SR-EI-PPS-2070-93 (DRAWING NUMBER)	A (REV)
COMPUTER REPRODUCABLE	SCALE: N/A	SHEET 20 OF 21

REV	DESCRIPTION	DATE	BY	CHECKED	APP
	SEE SHEET 1				

CABLE Num.	CHAIN	From LOCATION	To LOCATION	CONDUCTORS Needed
BM7B-1-A	A	BM7 B	CS1 & Emergency stop	6
BM7B-1-B	B	BM7 B	CS1 & Emergency stop	8
BM7B-2-A	A	BM7 B	Emergency Access E-Stop	6
BM7B-2-B	B	BM7 B	Emergency Access E-Stop & CS-E	8
BM7B-3-A	A	BM7 B	Guillotine switches	6
BM7B-3-B	B	BM7 B	Guillotine switches	6
BM7B-4-A	A	BM7 B	Front Door Switches	4
BM7B-4-B	B	BM7 B	Front Door Switches & REED Switch	6
BM7B-5-A	A	BM7 B	Front Door Maglock Locked Switches & Solenoid	4
BM7B-5-B	B	BM7 B	Spare	
BM7B-6-A	A	BM7 B	Labyrinth switches and latch	6
BM7B-6-B	B	BM7 B	Labyrinth switches and latch	6
BM7B-7-A	A	BM7 B	Front A Chain Interlock, Entry Permit, Beam lights	6
BM7B-7-B	B	BM7 B	Front B Chain Interlock, Entry Permit, Beam lights	6
BM7B-8-A	A	BM7 B	Beam Imminent Beacon & Sounder 1	2
BM7B-8-B	B	BM7 B	Search Beacon & Sounder 1	2
BM7B-9-A	A	BM7 B	Door Opener Inhibiting Relay	2
BM7B-9-B	B	BM7 B	OverHead Lights	2

REV	DESCRIPTION	DATE	BY	CHECKED	APP
A	INITIAL RELEASE	6/9/2017	SEJ	JM	SX

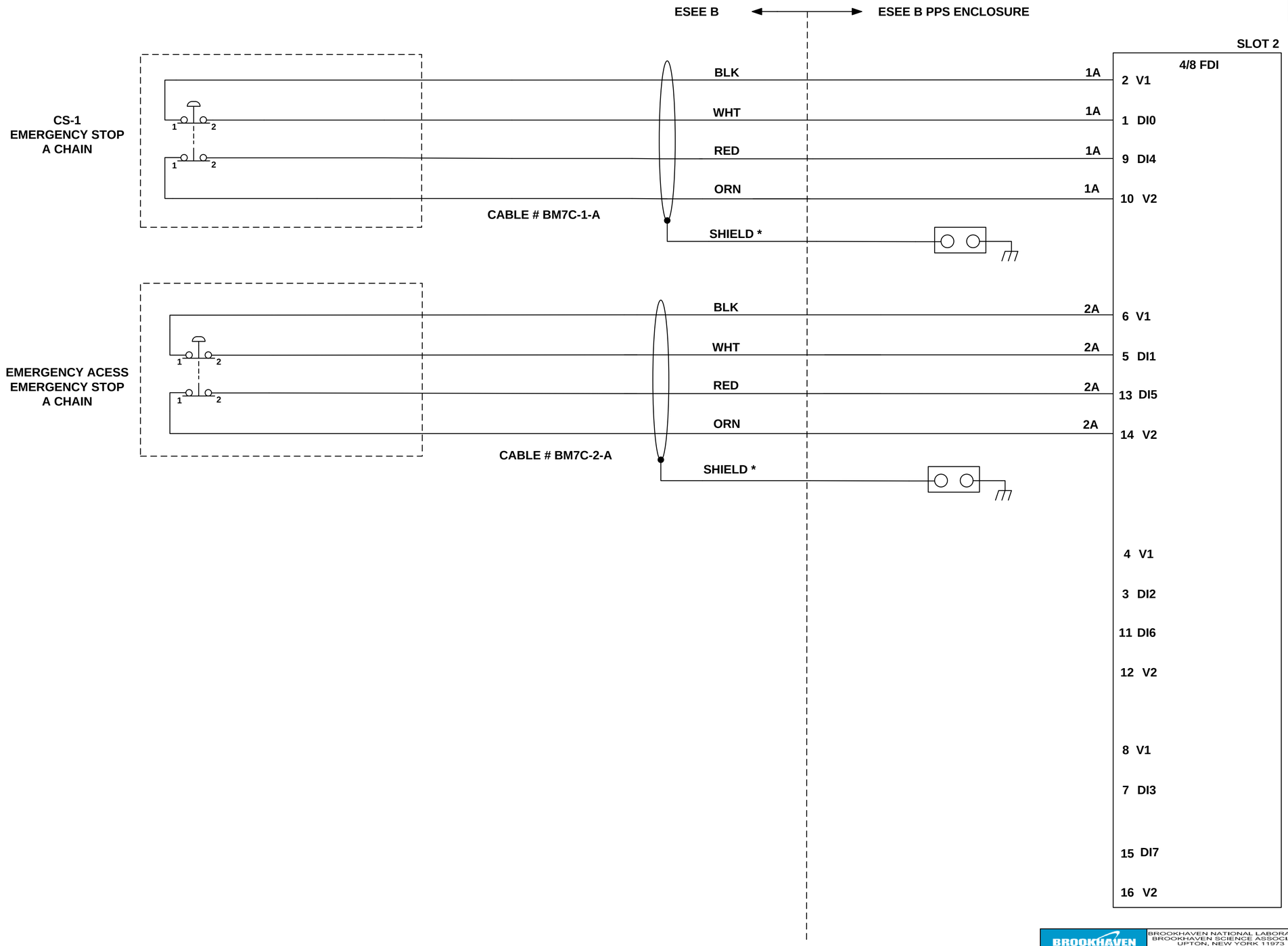

*** TIE ALL SHIELDS TO CHASSIS GROUND**

A

LT-EL-SR-EI-PPS-2070-94

BROOKHAVEN NATIONAL LABORATORY

BROOKHAVEN NATIONAL LABORATORY
BROOKHAVEN SCIENCE ASSOCIATES
UPTON, NEW YORK 11973
Exploring Life's Mysteries, Protecting its Future

NSLSII NATIONAL SYNCHROTRON LIGHT SOURCE II

UNLESS OTHERWISE SPECIFIED
INTEGER TOLERANCES ± .06
DECIMAL TOLERANCES
.X ± .030
.XX ± .015
.XXX ± .010
ANGULAR TOLERANCE ± 0.5°
UNSPECIFIED RADII .02 MAX
125 FINISH — BREAK SHARP CORNERS AND EDGES
MAX .03 MIN .005

UNLESS OTHERWISE SPECIFIED DIMENSIONS ARE IN INCHES
DIMENSIONS IN [*.**] ARE MILLIMETERS EQUIV. FOR REF. ONLY

ESH&Q RISK LEVEL A-1

INTERPRET DRAWING AS PER ANSI Y14.5 OR Y32.2

OUTSTANDING ECN'S

		DATE
DRWN BY	S. JARZABKOWSKI	6/9/2017
CHK BY	J.MALLEY	6/14/2017
ENG APP	S. XIN	6/13/2017
SUPV APP	G. GANETIS	6/21/2017
QA APP	E.CHESWICK	6/14/2017
ESH APP	R. LEE	6/14/2017

WIRING DIAGRAM
7-BM-C (QAS-C HUTCH)
A CHAIN AND B CHAIN

LT-EL-BL-EI — DRAWING DIRECTORY
LT-EL-SR-EI-PPS-2070-94 — DRAWING NUMBER
A — REV

COMPUTER REPRODUCABLE
SCALE: N/A
SHEET 1 OF 20

JOB NUMBER
USED ON DWG. NO.

REV	DESCRIPTION	DATE	BY	CHECKED	APP
	SEE SHEET 1				

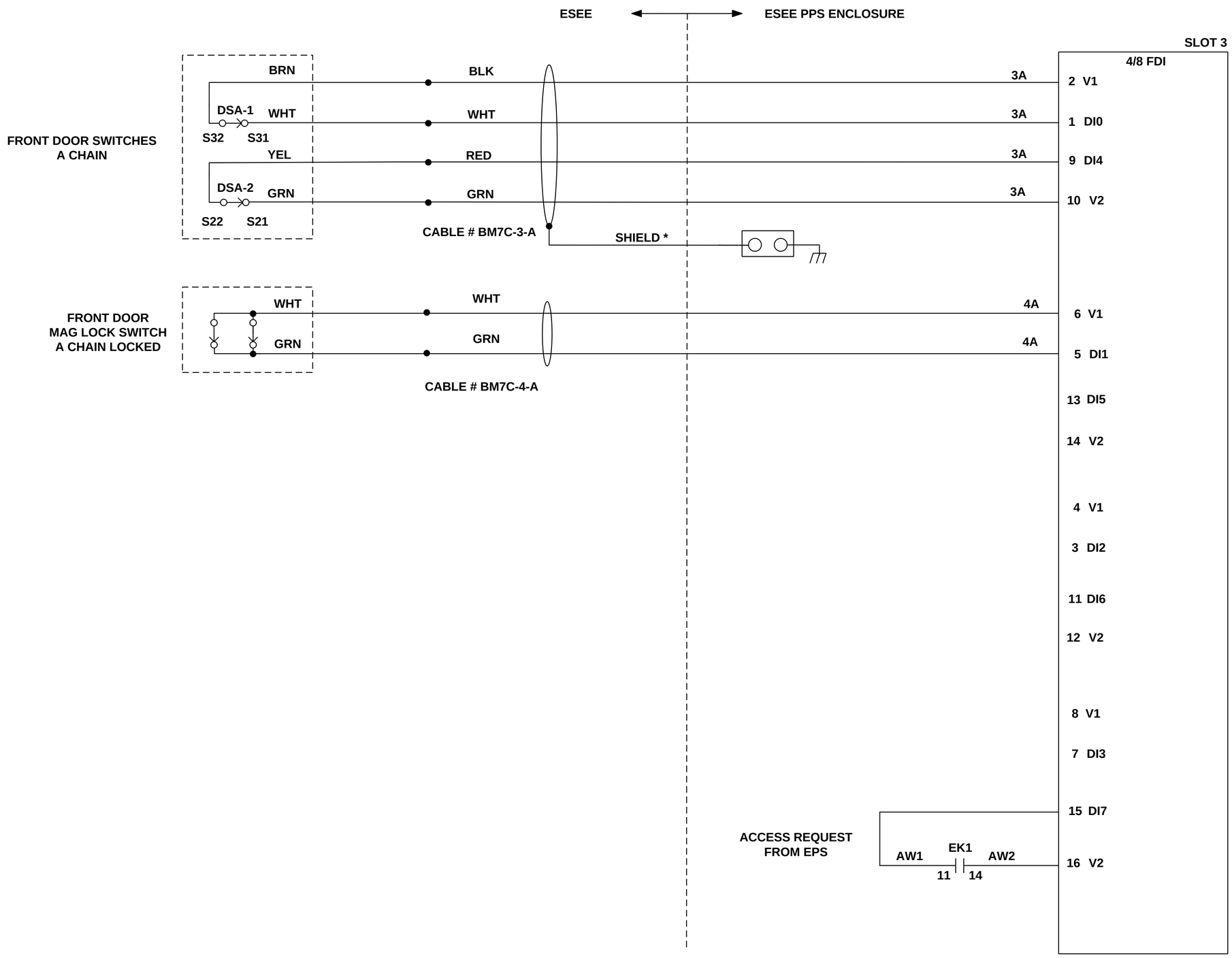

*** TIE ALL SHIELDS TO CHASSIS GROUND**

A

LT-EL-BL-EI (DRAWING DIRECTORY)	LT-EL-SR-EI-PPS-2070-94 (DRAWING NUMBER)	A (REV)
COMPUTER REPRODUCABLE	SCALE: N/A	SHEET 2 OF 20

LT-EL-SR-EI-PPS-2070-94

REV	DESCRIPTION	DATE	BY	CHECKED	APP
	SEE SHEET 1				

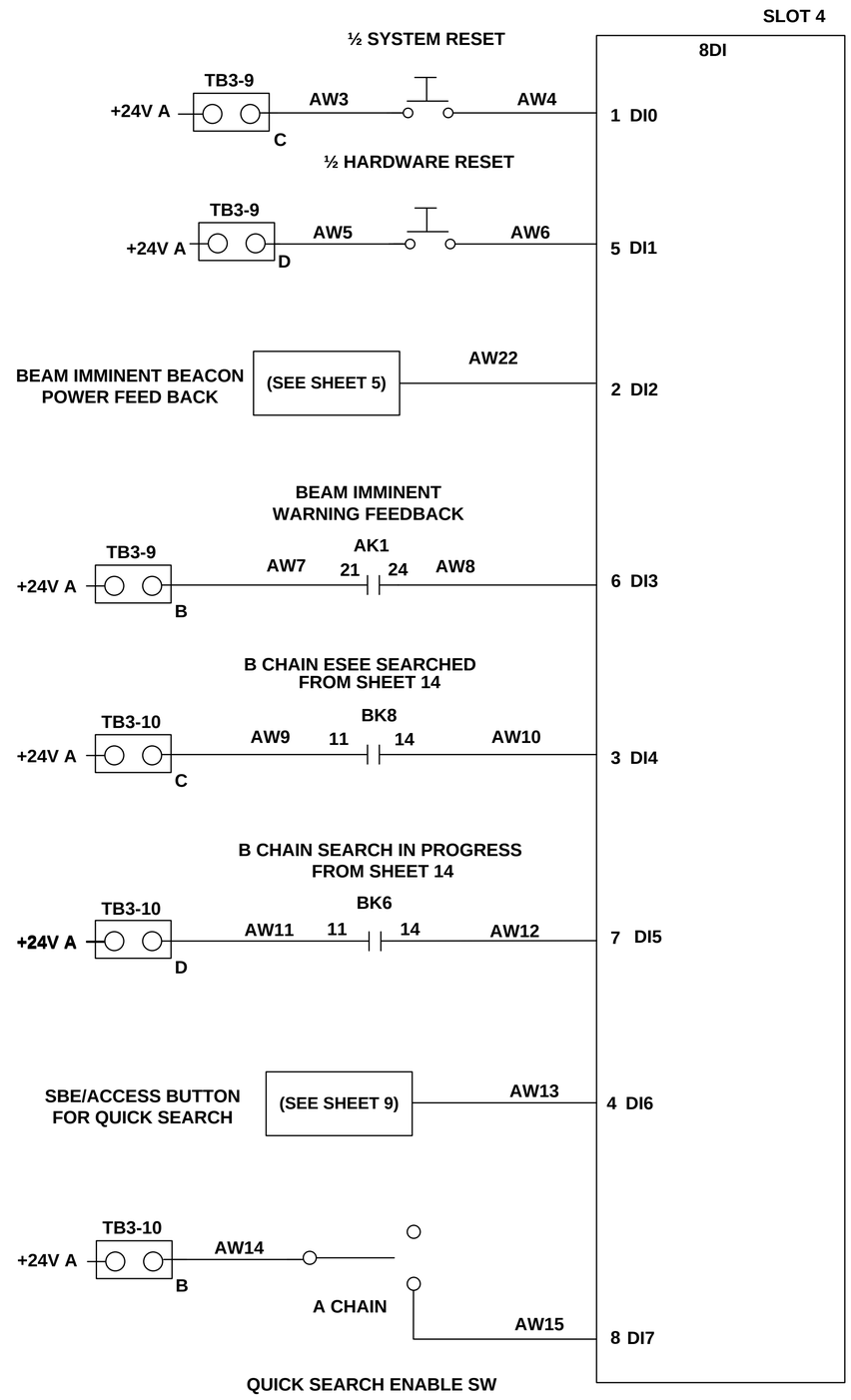

A

LT-EL-BL-EI	LT-EL-SR-EI-PPS-2070-94	A
DRAWING DIRECTORY	DRAWING NUMBER	REV

COMPUTER REPRODUCABLE | SCALE: N/A | SHEET 3 OF 20

LT-EL-SR-EI-PPS-2070-94

REV	DESCRIPTION	DATE	BY	CHECKED	APP
	SEE SHEET 1				

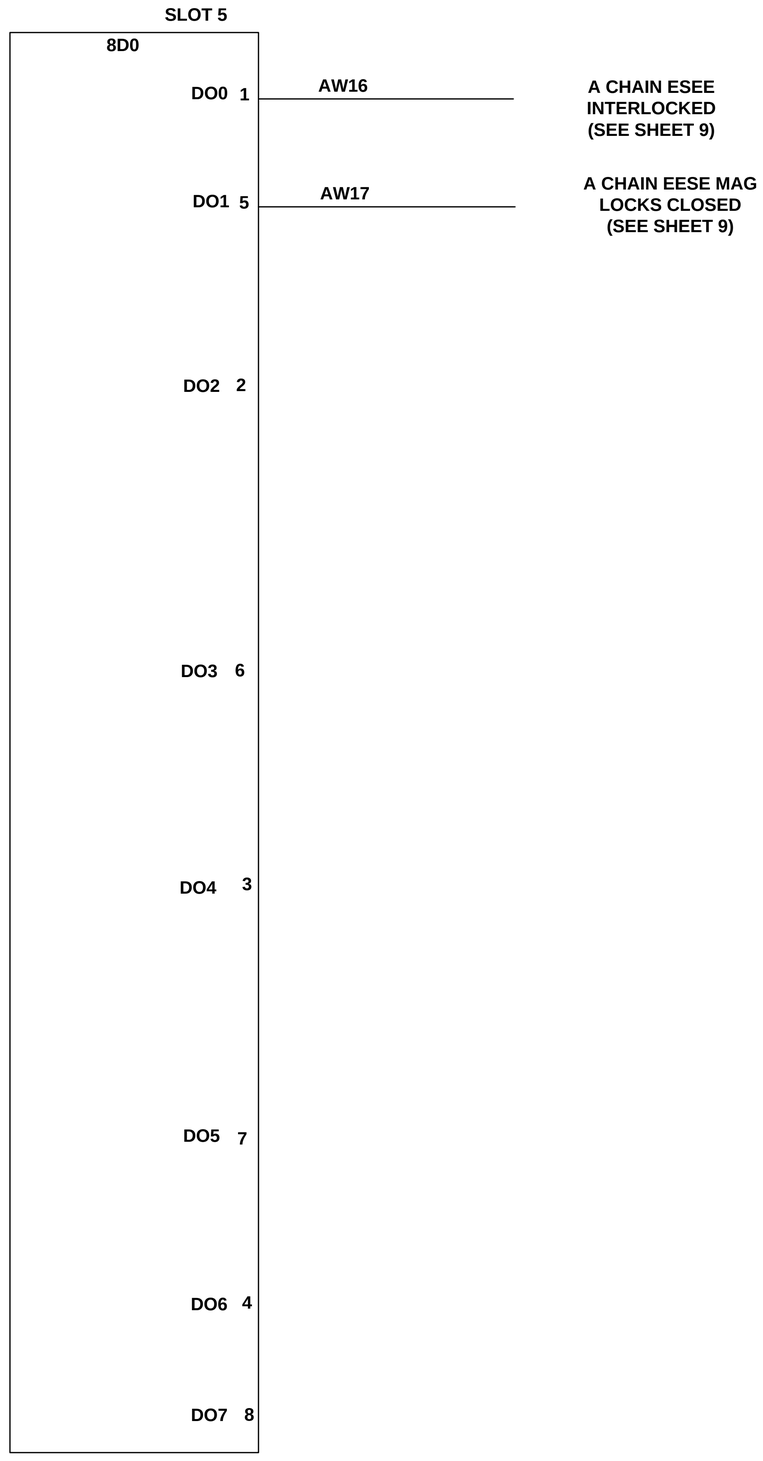

A

LT-EL-BL-EI DRAWING DIRECTORY	LT-EL-SR-EI-PPS-2070-94 DRAWING NUMBER	A REV
COMPUTER REPRODUCABLE	SCALE: N/A	SHEET 4 OF 20

LT-EL-SR-EI-PPS-2070-94

REV	DESCRIPTION	DATE	BY	CHECKED	APP
	SEE SHEET 1				

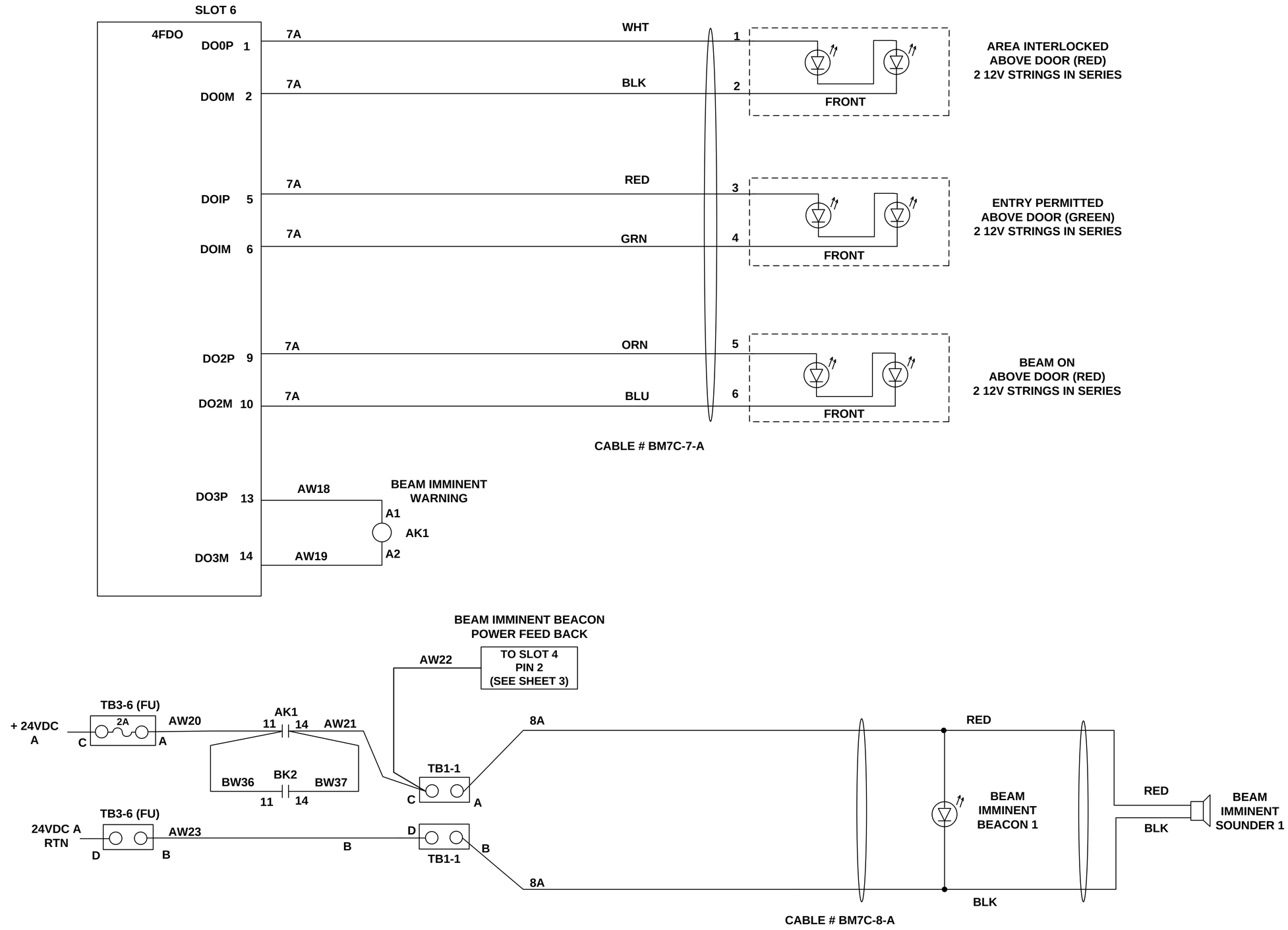

* TIE ALL SHIELDS TO CHASSIS GROUND

A

LT-EL-BL-EI (DRAWING DIRECTORY)	LT-EL-SR-EI-PPS-2070-94 (DRAWING NUMBER)	A (REV)
COMPUTER REPRODUCABLE	SCALE: N/A	SHEET 5 OF 20

LT-EL-SR-EI-PPS-2070-94

REV	DESCRIPTION	DATE	BY	CHECKED	APP
	SEE SHEET 1				

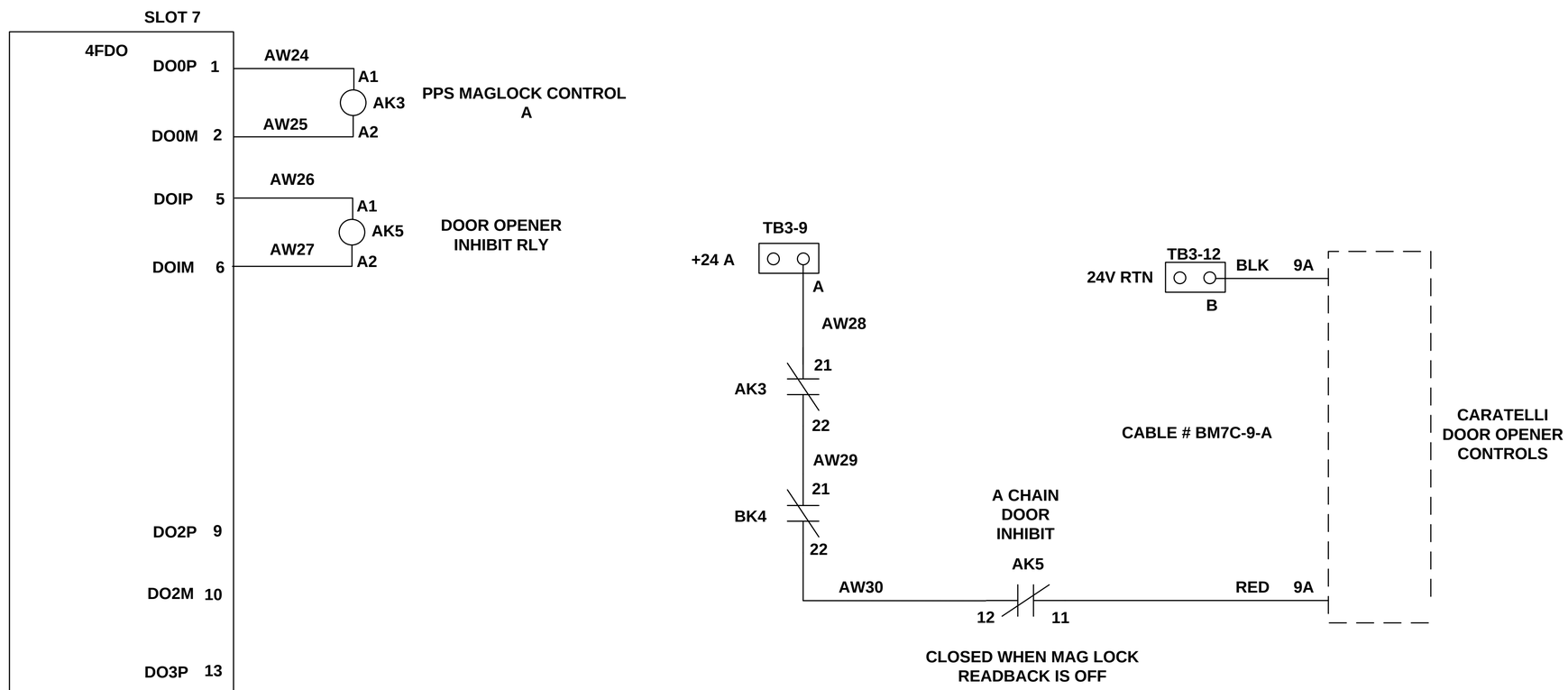

A

LT-EL-BL-EI (DRAWING DIRECTORY)	LT-EL-SR-EI-PPS-2070-94 (DRAWING NUMBER)	A (REV)
COMPUTER REPRODUCABLE	SCALE: N/A	SHEET 6 OF 20

LT-EL-SR-EI-PPS-2070-94

REV	DESCRIPTION	DATE	BY	CHECKED	APP
	SEE SHEET 1				

DOOR MAG LOCK

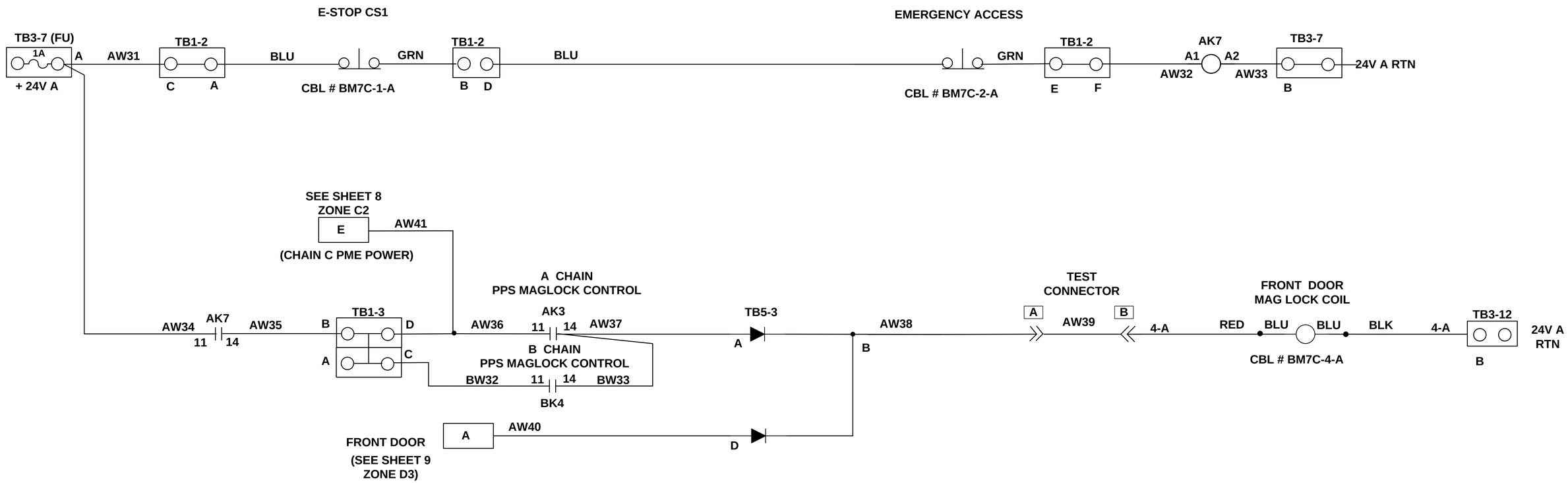

A

LT-EL-BL-EI	LT-EL-SR-EI-PPS-2070-94	A
DRAWING DIRECTORY	DRAWING NUMBER	REV

COMPUTER REPRODUCABLE | SCALE: N/A | SHEET 7 OF 20

LT-EL-SR-EI-PPS-2070-94

REV	DESCRIPTION	DATE	BY	CHECKED	APP
	SEE SHEET 1				

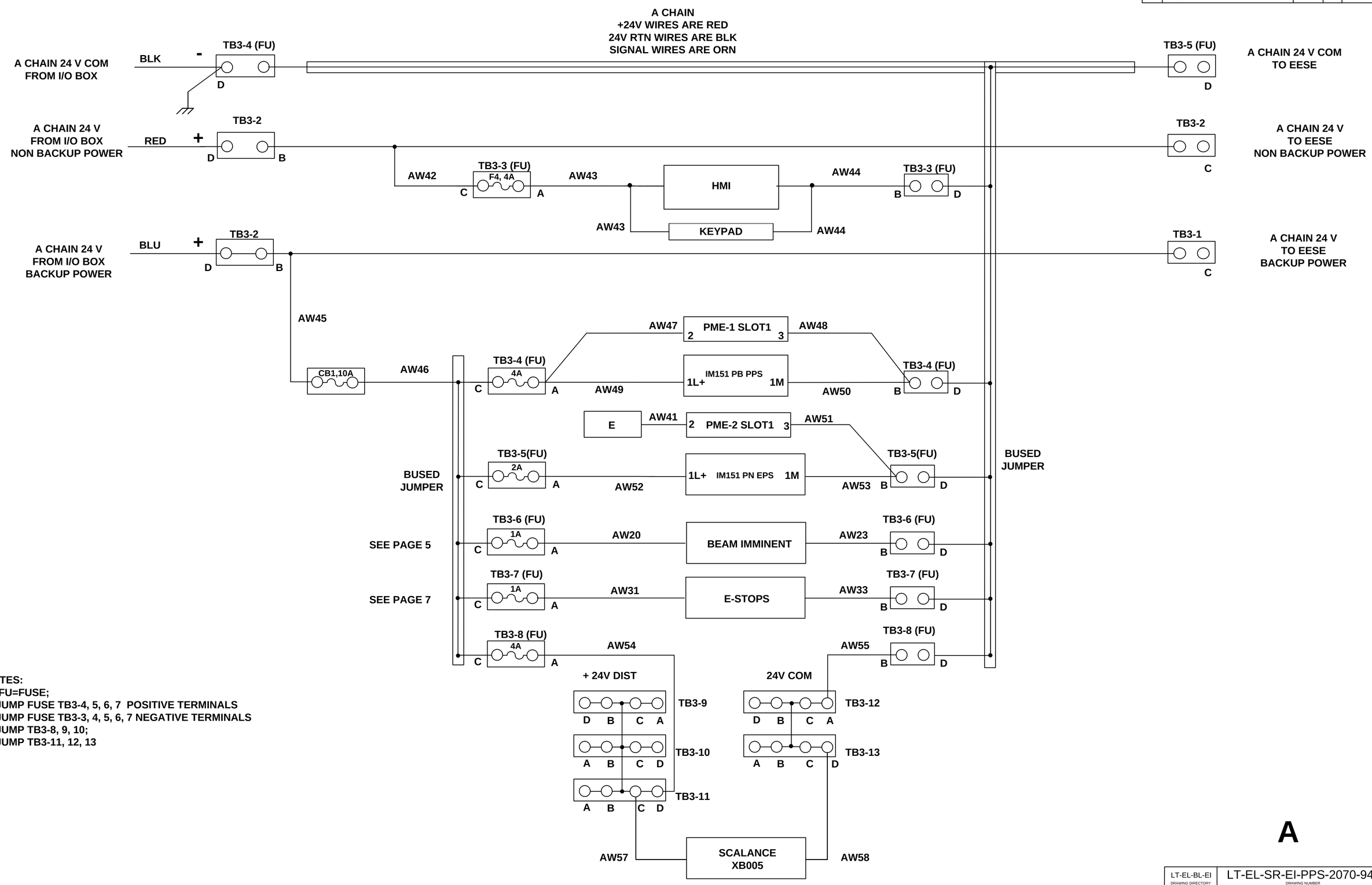

NOTES:
1. FU=FUSE;
2. JUMP FUSE TB3-4, 5, 6, 7 POSITIVE TERMINALS
3. JUMP FUSE TB3-3, 4, 5, 6, 7 NEGATIVE TERMINALS
4. JUMP TB3-8, 9, 10;
5. JUMP TB3-11, 12, 13

A

LT-EL-BL-EI (DRAWING DIRECTORY)	LT-EL-SR-EI-PPS-2070-94 (DRAWING NUMBER)	A (REV)
COMPUTER REPRODUCABLE	SCALE: N/A	SHEET 8 OF 20

LT-EL-SR-EI-PPS-2070-94

REV	DESCRIPTION	DATE	BY	CHECKED	APP
	SEE SHEET 1				

EPS

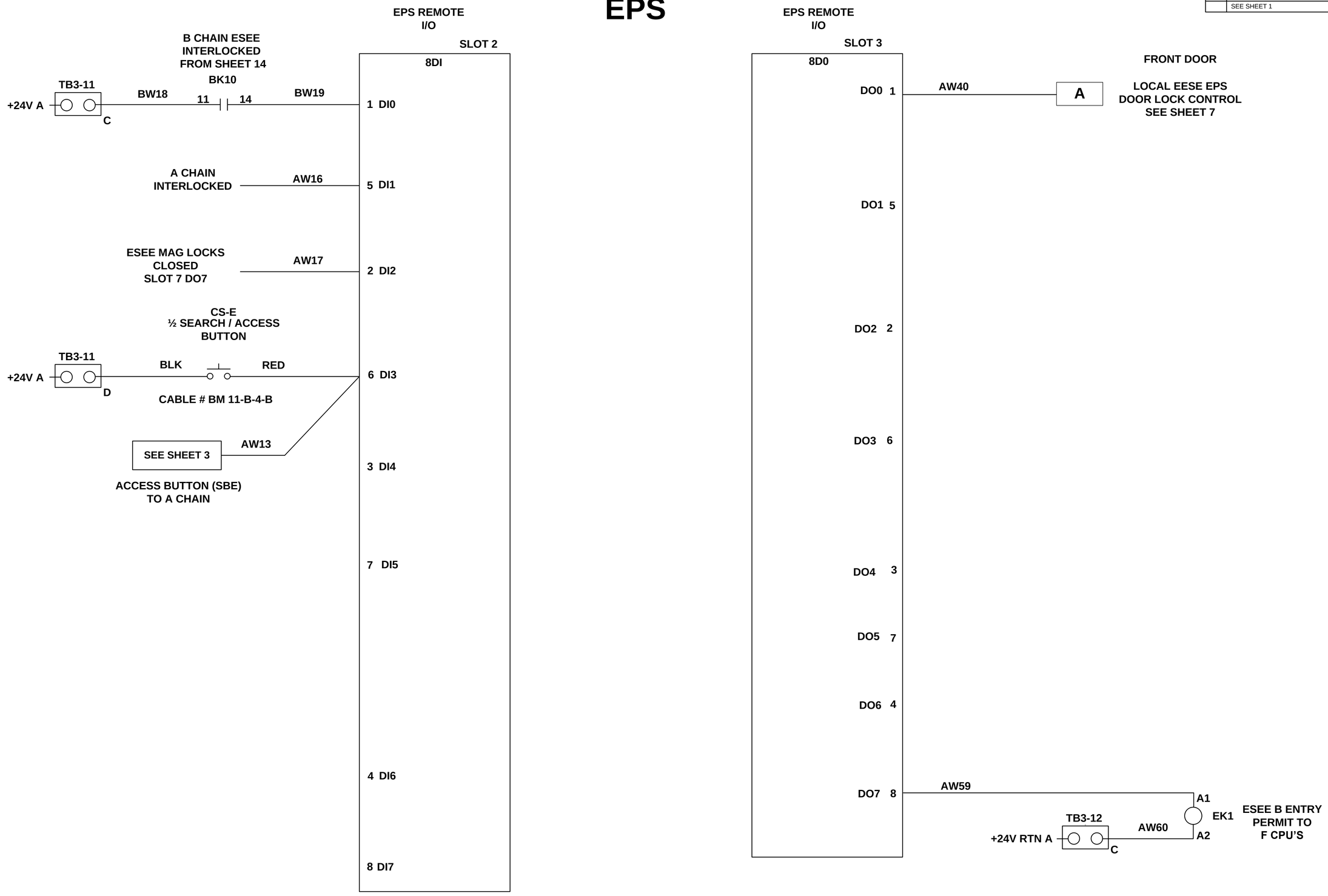

A

LT-EL-BL-EI (DRAWING DIRECTORY)	LT-EL-SR-EI-PPS-2070-94 (DRAWING NUMBER)	A (REV)
COMPUTER REPRODUCABLE	SCALE: N/A	SHEET 9 OF 20

LT-EL-SR-EI-PPS-2070-94

REV	DESCRIPTION	DATE	BY	CHECKED	APP
	SEE SHEET 1				

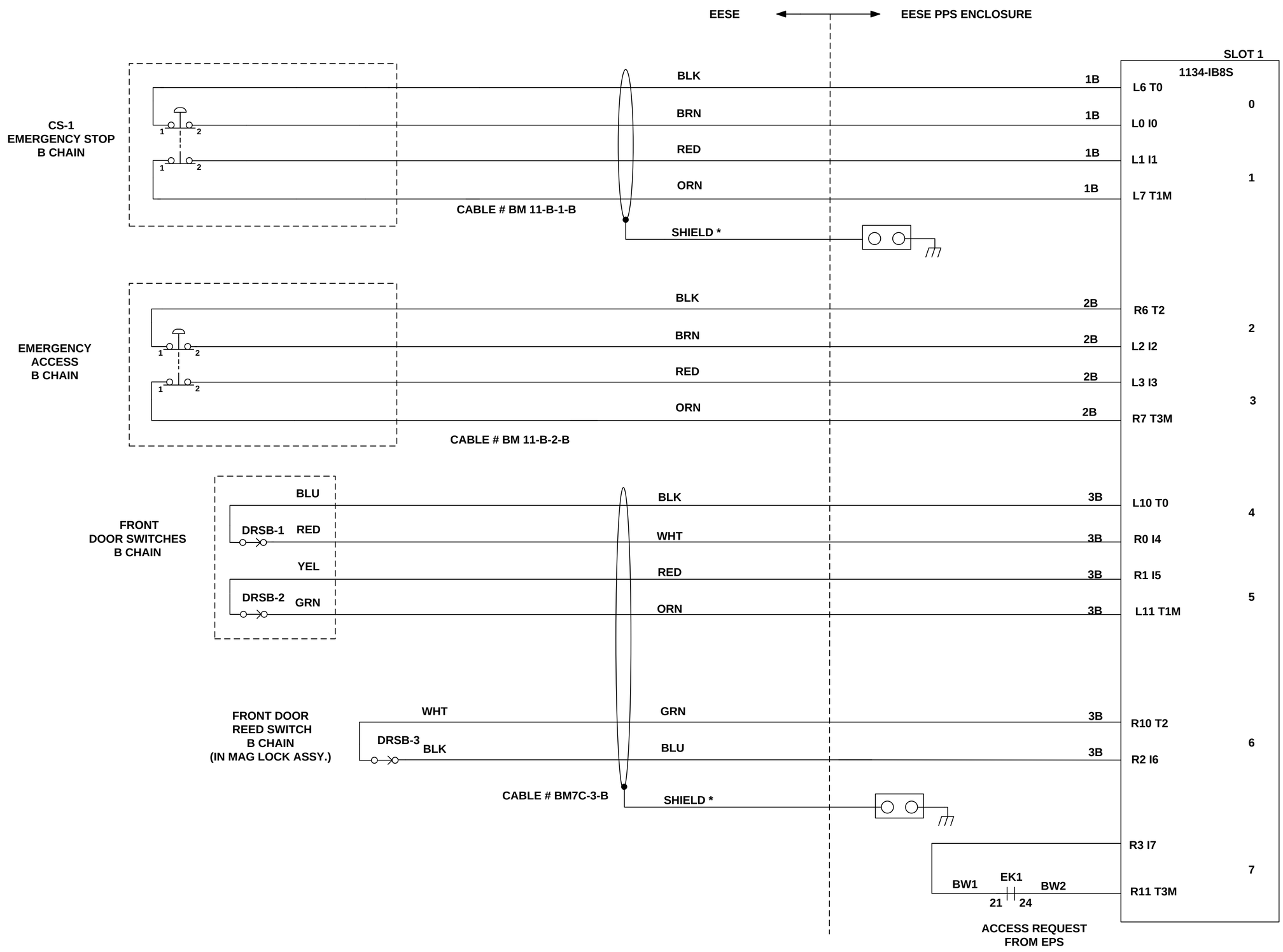

B

* TIE ALL SHIELDS TO CHASSIS GROUND

LT-EL-BL-EI (DRAWING DIRECTORY)	LT-EL-SR-EI-PPS-2070-94 (DRAWING NUMBER)	A (REV)
COMPUTER REPRODUCABLE	SCALE: N/A	SHEET 10 OF 20

LT-EL-SR-EI-PPS-2070-94

REV	DESCRIPTION	DATE	BY	CHECKED	APP
	SEE SHEET 1				

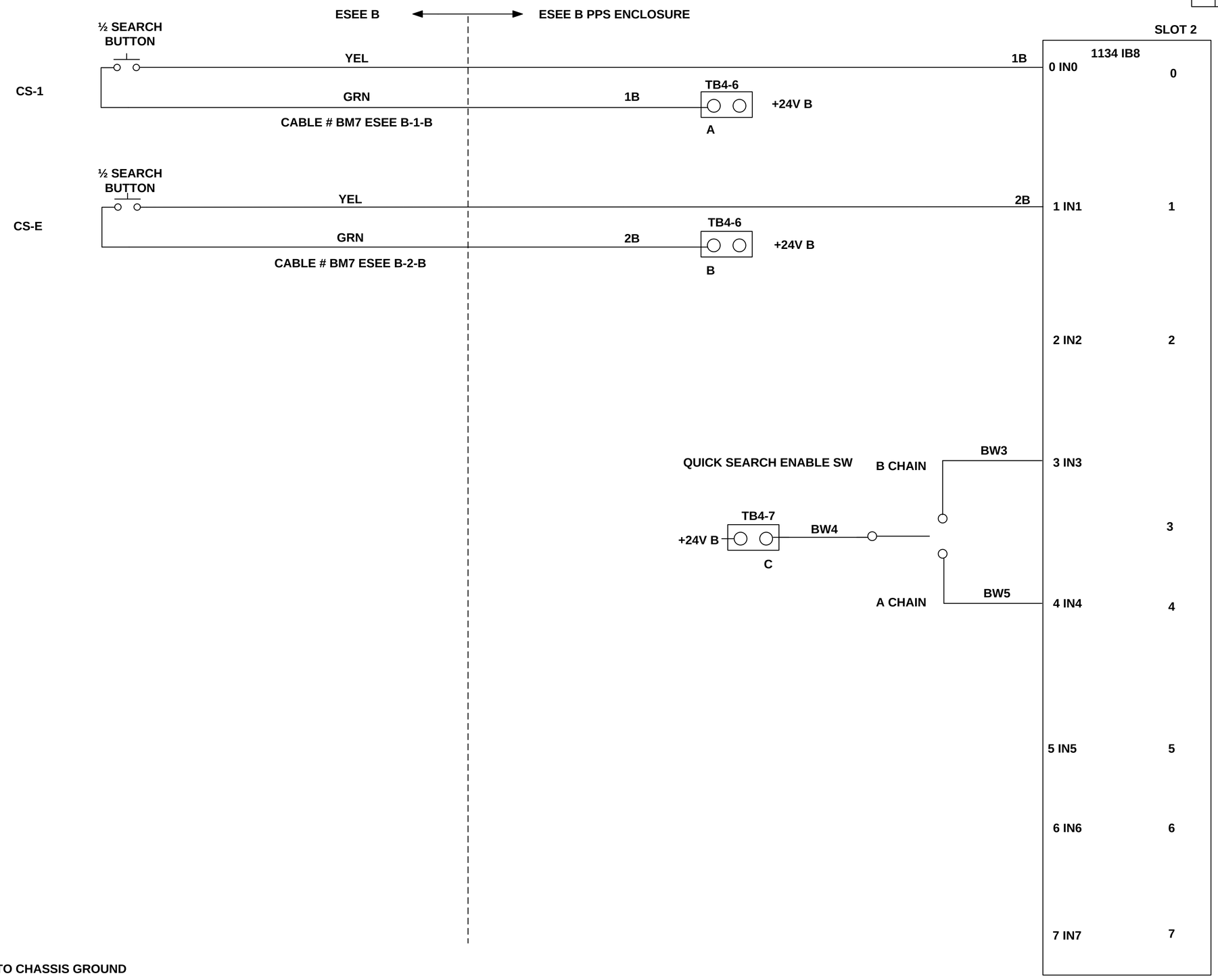

* TIE ALL SHIELDS TO CHASSIS GROUND

B

LT-EL-BL-EI DRAWING DIRECTORY	LT-EL-SR-EI-PPS-2070-94 DRAWING NUMBER	A REV
COMPUTER REPRODUCABLE	SCALE: N/A	SHEET 11 OF 20

LT-EL-SR-EI-PPS-2070-94

REV	DESCRIPTION	DATE	BY	CHECKED	APP
	SEE SHEET 1				

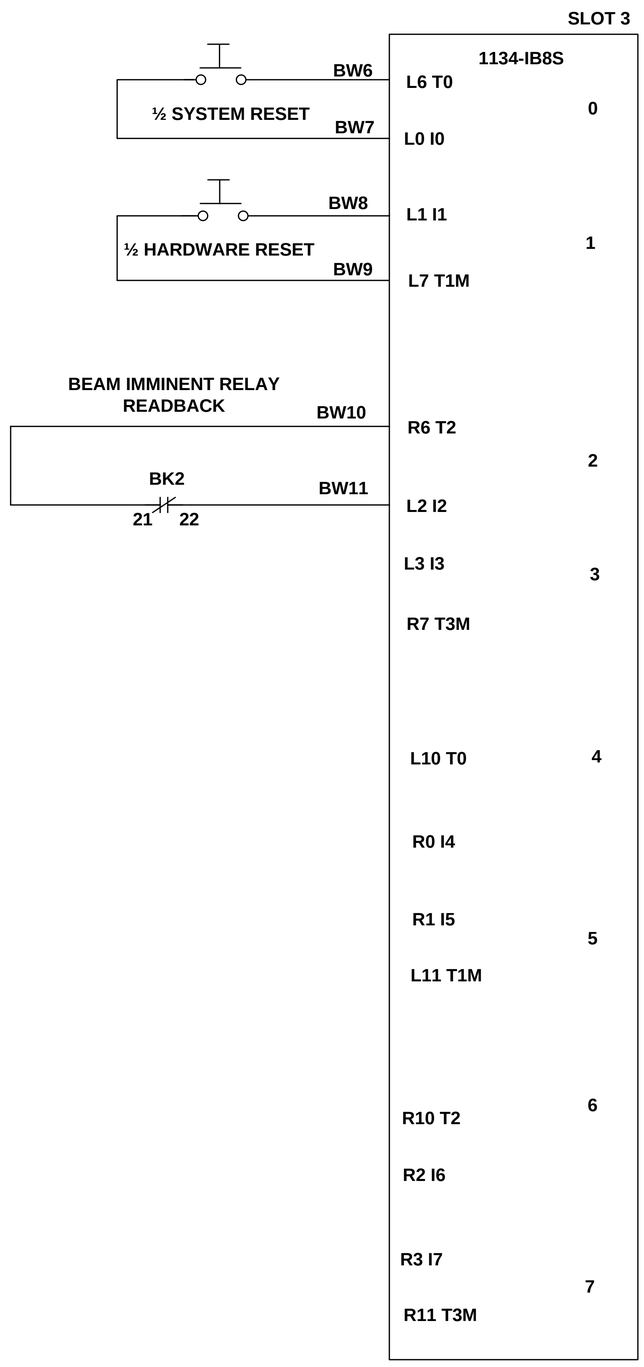

B

LT-EL-BL-EI (DRAWING DIRECTORY)	LT-EL-SR-EI-PPS-2070-94 (DRAWING NUMBER)	A (REV)
COMPUTER REPRODUCABLE	SCALE: N/A	SHEET 12 OF 20

LT-EL-SR-EI-PPS-2070-94

REV	DESCRIPTION	DATE	BY	CHECKED	APP
	SEE SHEET 1				

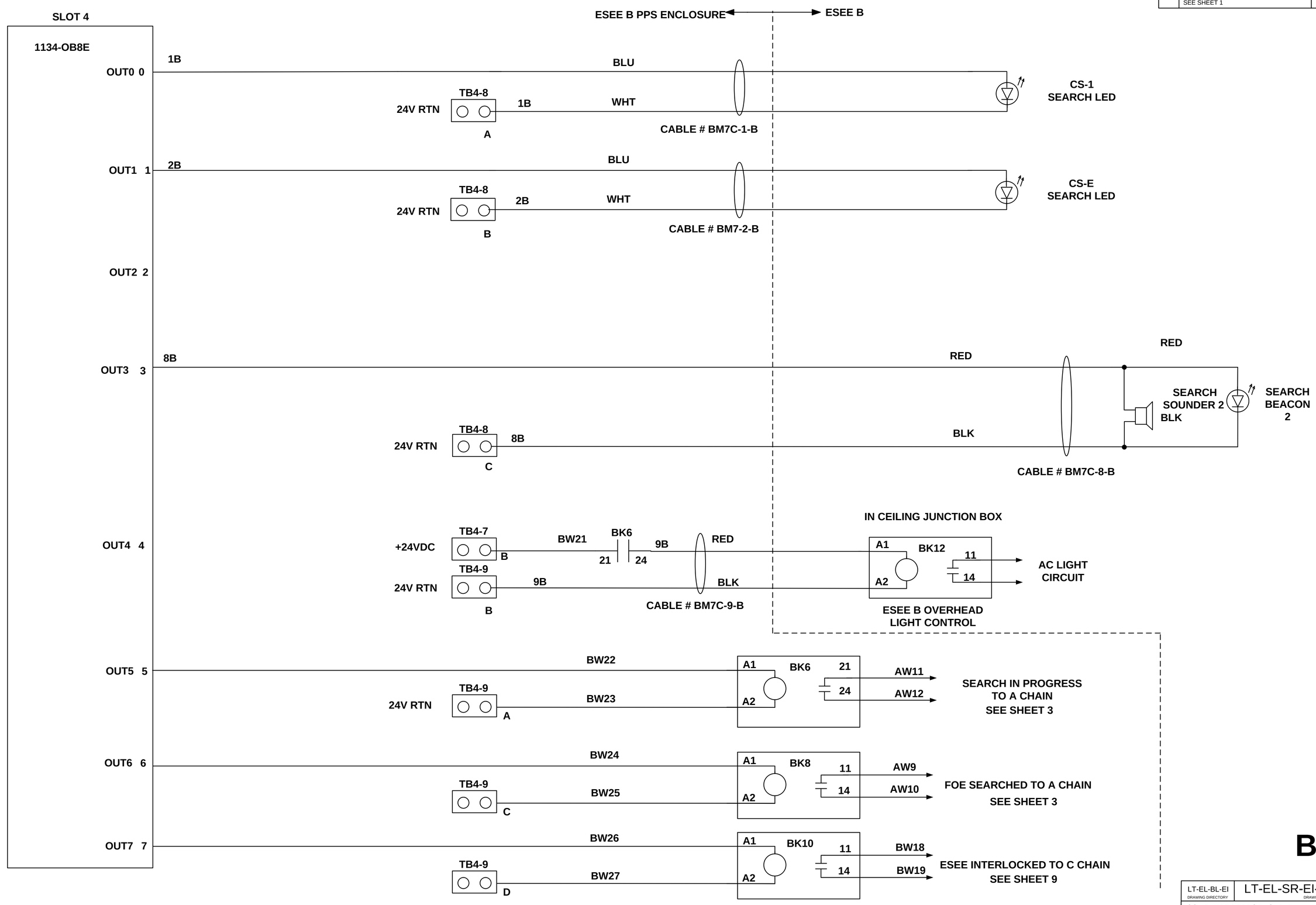

B

LT-EL-BL-EI	LT-EL-SR-EI-PPS-2070-94	A
DRAWING DIRECTORY	DRAWING NUMBER	REV

COMPUTER REPRODUCABLE | SCALE: N/A | SHEET 13 OF 20

LT-EL-SR-EI-PPS-2070-94

REV	DESCRIPTION	DATE	BY	CHECKED	APP
	SEE SHEET 1				

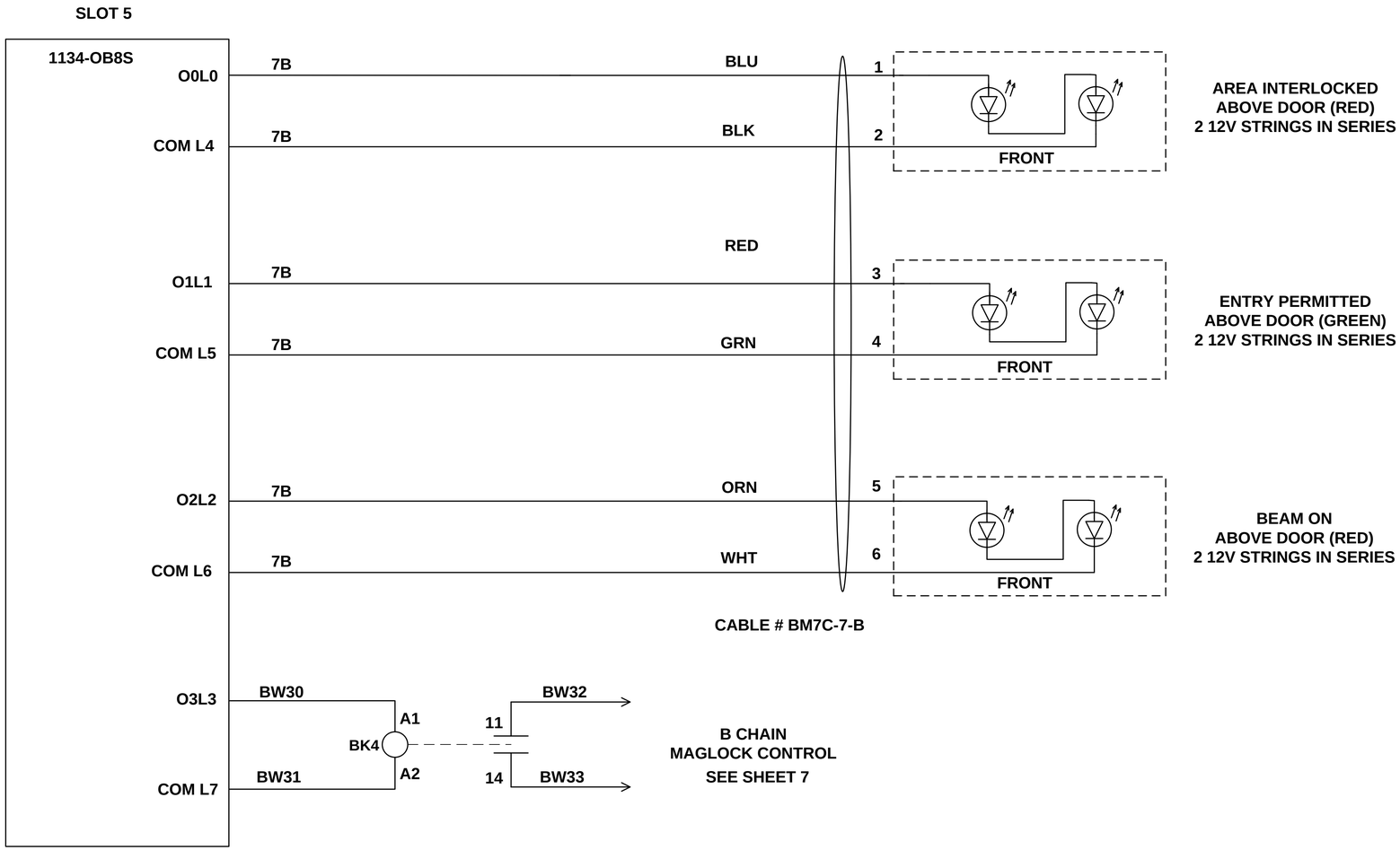

B

LT-EL-BL-EI (DRAWING DIRECTORY)	LT-EL-SR-EI-PPS-2070-94 (DRAWING NUMBER)	A (REV)
COMPUTER REPRODUCABLE	SCALE: N/A	SHEET 14 OF 20

LT-EL-SR-EI-PPS-2070-94

REV	DESCRIPTION	DATE	BY	CHECKED	APP
	SEE SHEET 1				

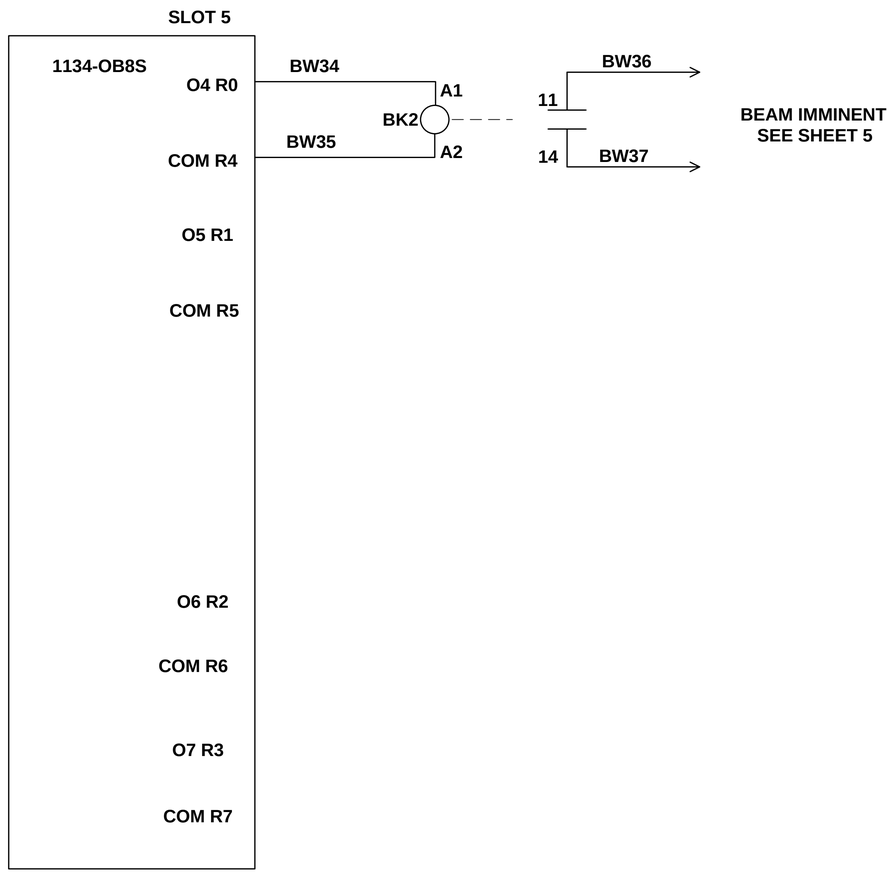

B

LT-EL-BL-EI DRAWING DIRECTORY	LT-EL-SR-EI-PPS-2070-94 DRAWING NUMBER	A REV
COMPUTER REPRODUCABLE	SCALE: N/A	SHEET 15 OF 20

LT-EL-SR-EI-PPS-2070-94

REV	DESCRIPTION	DATE	BY	CHECKED	APP
	SEE SHEET 1				

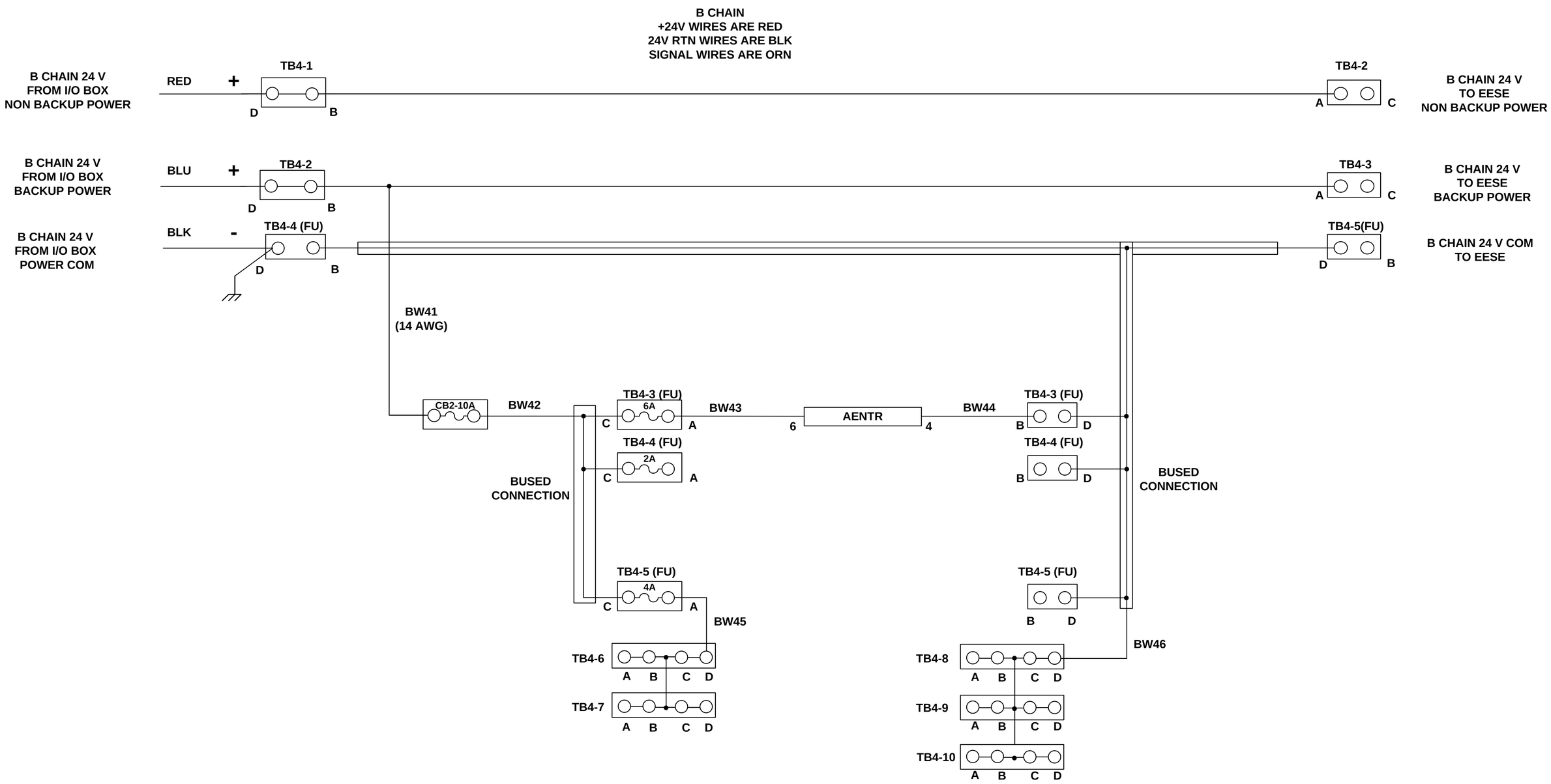

B

LT-EL-BL-EI	LT-EL-SR-EI-PPS-2070-94	A
DRAWING DIRECTORY	DRAWING NUMBER	REV

COMPUTER REPRODUCABLE | SCALE: N/A | SHEET 16 OF 20

LT-EL-SR-EI-PPS-2070-94

REV	DESCRIPTION	DATE	BY	CHECKED	APP
	SEE SHEET 1				

7-BM NETWORK LAYOUT

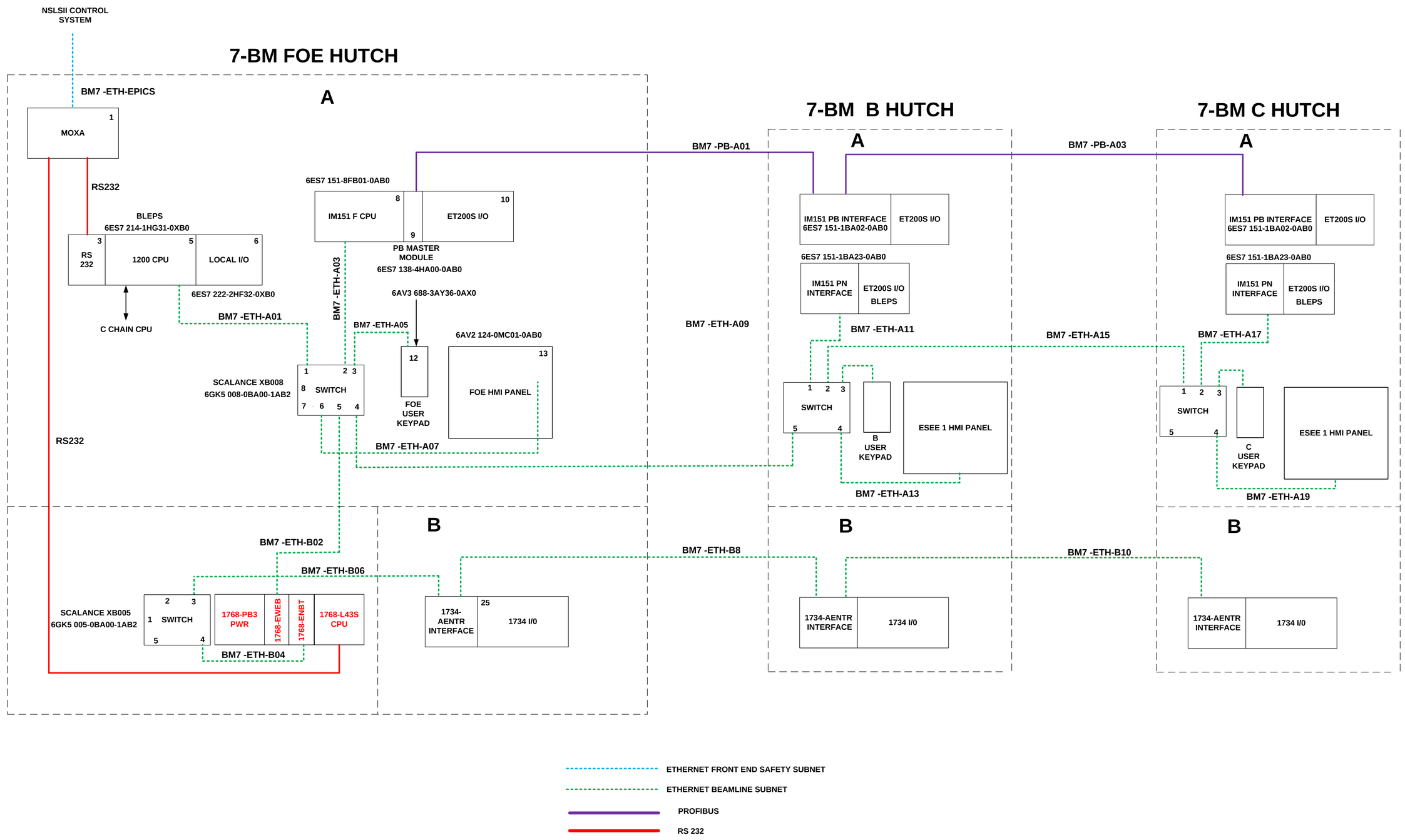

LT-EL-BL-EI (DRAWING DIRECTORY)	LT-EL-SR-EI-PPS-2070-94 (DRAWING NUMBER)	A (REV)
COMPUTER REPRODUCABLE	SCALE: N/A	SHEET 17 OF 20

LT-EL-SR-EI-PPS-2070-94

REV	DESCRIPTION	DATE	BY	CHECKED	APP
	SEE SHEET 1				

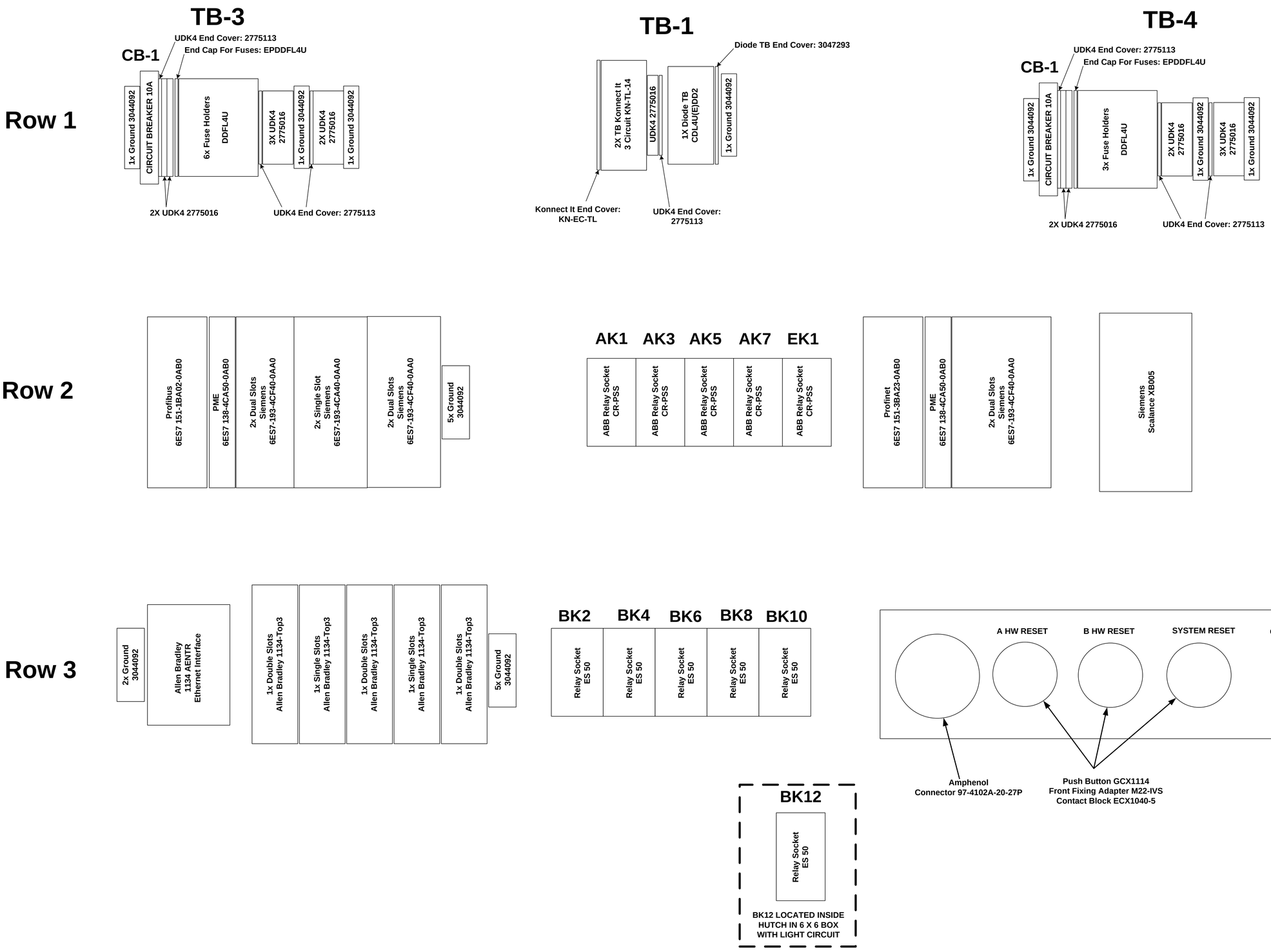

LT-EL-SR-EI-PPS-2070-94

LT-EL-BL-EI	LT-EL-SR-EI-PPS-2070-94	A
DRAWING DIRECTORY	DRAWING NUMBER	REV

COMPUTER REPRODUCABLE | SCALE: N/A | SHEET 18 OF 20

REV	DESCRIPTION	DATE	BY	CHECKED	APP
	SEE SHEET 1				

ROW 1:						
	[20]					
	[2]					
CB 1	WMZS1B10	N/A	Circuit Breaker B10	Eaton		
TB 3	[19]	x2 [13]	[6]	x6 [8]		
	[19]	x3 [13]	[2]	[19]	x4 [13]	[2]
TB 5	[15]	x1 [14]	[19]	[13]	x1 [16]	[17]
	[20]					
	[2]					
CB 2	WMZS1B10	N/A	Circuit Breaker B10	Eaton		
TB 4	[19]	x2 [13]	[6]	x4 [8]		
	[19]	x3 [13]	[2]	[19]	x3 [13]	[2]
ROW 2:						
SLOT	MODULE	SOCKET	DESCRIPTION	VENDOR		
	6ES7-151-1BA02-0AB0	N/A	DP INTERFACE	SIEMENS		
1	6ES7-138-4CA50-0AB0	6ES7-193-4CC20-0AA0	POWER MODULE PM-E	SIEMENS		
2	6ES7-138-4FA04-0AB0	6ES7-193-4CF40-0AA0	4/8FDI SAFETY INPUT	SIEMENS		
3	6ES7-138-4FA04-0AB0	6ES7-193-4CF40-0AA0	4/8FDI SAFETY INPUT	SIEMENS		
4	6ES7-131-4BF00-0AB0	6ES7-193-4CA40-0AA0	8DI STANDARD IN	SIEMENS		
5	6ES7-132-4BF00-0AA0	6ES7-193-4CA40-0AA0	8DO STANDARD OUT	SIEMENS		
6	6ES7-138-4FB03-0AB0	6ES7-193-4CF40-0AA0	4FDO SAFETY OUTPUT	SIEMENS		
7	6ES7-138-4FB03-0AB0	6ES7-193-4CF40-0AA0	4FDO SAFETY OUTPUT	SIEMENS		
8	6ES7-193-4JA00-0AA0	N/A	SOCKET COVER	SIEMENS		
TB 1	[2]	[2]	[3]	x81 [1]	[2]	[2]
RELAY	MODULE	SOCKET	DESCRIPTION	VENDOR		
AK1	OW5669.12/983/61	RT 78626	RELAY	ALTECH/DOLD		
AK3	OW5669.12/983/61	RT 78626	RELAY	ALTECH/DOLD		
AK5	OW5669.12/983/61	RT 78626	RELAY	ALTECH/DOLD		
AK7	OW5669.12/983/61	RT 78626	RELAY	ALTECH/DOLD		
EK1	OW5669.12/983/61	RT 78626	RELAY	ALTECH/DOLD		
	6ES7-151-3BA23-0AB0	N/A	PN INTERFACE	SIEMENS		
1	6ES7-138-4CA50-0AB0	6ES7-193-4CC20-0AA0	POWER MODULE PM-E	SIEMENS		
2	6ES7-131-4BF00-0AB0	6ES7-193-4CA40-0AA0	8DI STANDARD IN	SIEMENS		
3	6ES7-132-4BF00-0AA0	6ES7-193-4CA40-0AA0	8DO STANDARD OUT	SIEMENS		
	6GK50050BA001AB2	N/A	6 PORT SWITCH	SIEMENS		

ROW 3:				
SLOT	MODULE	SOCKET	DESCRIPTION	VENDOR
	1734-AENTR	N/A	24V DC EHTERNET ADAPTER	AB
1	1734-IB8S	1734-TOP3 (2)	8 INPUT SAFETY	AB
2	1734-IB8S	1734-TOP3 (2)	8 INPUT SAFETY	AB
3	1734-IB8	1734-TOP3	STANDARD 8 INPUT MODULE	AB
4	1734-IB8S	1734-TOP3	8 INPUT SAFETY	AB
5	1734-OB8E	1734-TOP3	8 CURRENT SOURCE	AB
6	1734-OW4	1734-TOP3	4 FORM RELAY MODULE	AB
7	1734-OB8S	1734-TOP3 (2)	8 OUTPUT SAFETY	AB
	[2]	[2]		
RELAY	MODULE	SOCKET	DESCRIPTION	VENDOR
BK2	SGR282Z	RT 78626	RELAY	SHRACK
BK4	SGR282Z	RT 78626	RELAY	SHRACK
BK6	SGR282Z	RT 78626	RELAY	SHRACK
BK8	SGR282Z	RT 78626	RELAY	SHRACK
BK10	SGR282Z	RT 78626	RELAY	SHRACK
BK12	SGR282Z	RT 78626	RELAY	SHRACK
	[2]	[2]		
TEST CONNECTOR	A HW RESET BTN	SYSTEM RESET BTN	B HW RESET BTN	QUICK SEARCH SW

	A CHAIN RELAYS
AK1	A CHAIN BEAM IMMINENT WARNING
AK3	A CHAIN MAG LOCK CONTROL
AK5	A CHAIN DOOR OPENER INHIBIT
AK7	E STOP HARDWIRE RELAY
	B CHAIN RELAYS
BK2	B CHAIN BEAM IMMINENT RELAY
BK4	B CHAIN MAG LOCK RELAY
BK6	B CHAIN SEARCH IN PROGRESS
BK8	B CHAIN ESEE SEARCHED
BK10	B CHAIN ESEE INTERLOCKED
BK12	OVERHEAD LIGHT CONTROL
EK1	ACCESS REQUEST FROM EPS

LT-EL-SR-EI-PPS-2070-94

LT-EL-BL-EI (DRAWING DIRECTORY)	LT-EL-SR-EI-PPS-2070-94 (DRAWING NUMBER)	A (REV)
COMPUTER REPRODUCABLE	SCALE: N/A	SHEET 19 OF 20

REV	DESCRIPTION	DATE	BY	CHECKED	APP
	SEE SHEET 1				

CABLE Num.	CHAIN	From LOCATION	To LOCATION	CONDUCTORS Needed
BM7C-1-A	A	BM7C	CS1&Emergency stop	6
BM7C-1-B	B	BM7C	CS1&Emergency stop	8
BM7C-2-A	A	BM7C	Emergency Access E-Stop	6
BM7C-2-B	B	BM7C	Emergency Access E-Stop & CS-E	8
BM7C-3-A	A	BM7C	Front Door Switches	4
BM7C-3-B	B	BM7C	Front Door Switches& REED Switch	6
BM7C-4-A	A	BM7C	Front Door Maglock Locked Switches&Solen	4
BM7C-4-B	B	BM7C	SPARE	
BM7C-5-A	A	BM7C	SPARE	
BM7C-5-B	B	BM7C	SPARE	
BM7C-6-A	A	BM7C	SPARE	
BM7C-6-B	B	BM7C	SPARE	
BM7C-7-A	A	BM7C	FRONT A Chain Interlock, Entry Permit, Bean	6
BM7C-7-B	B	BM7C	FRONT BChain Interlock, Entry Permit, Beam	6
BM7C-8-A	A	BM7C	Beam Imminent Beacon&Sounder 1	2
BM7C-8-B	B	BM7C	Search Beacon&Sounder1	2
BM7C-9-A	A	BM7C	Door Opener Inhibiting Relay	2
BM7C-9-B	B	BM7C	OverHead Lights	2

REV	DESCRIPTION	DATE	BY	CHECKED	APP
A	INITIAL RELEASE	8/01/2017	SEJ	JM	SB

7-BM FOE SEARCH LOGIC

(SEARCH IN B CHAIN ONLY)

GEN II

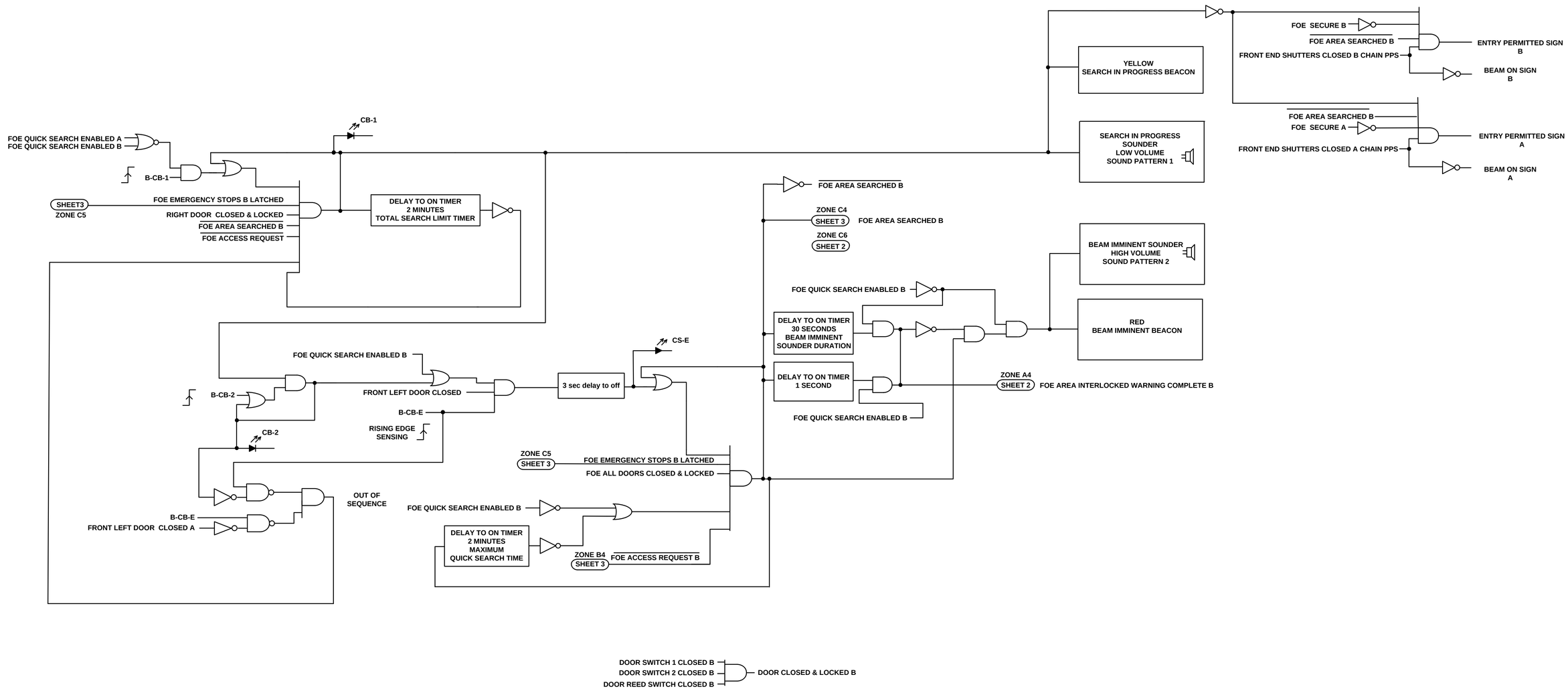

FOE LOGIC

LT-EL-BL-EI-PPS-2070-96

JOB NUMBER	USED ON DWG. NO.

BROOKHAVEN NATIONAL LABORATORY

BROOKHAVEN NATIONAL LABORATORY
BROOKHAVEN SCIENCE ASSOCIATES
UPTON, NEW YORK 11973
Exploring Life's Mysteries, Protecting its Future

NSLS II NATIONAL SYNCHROTRON LIGHT SOURCE II

UNLESS OTHERWISE SPECIFIED
INTEGER TOLERANCES ± .06
DECIMAL TOLERANCES
.X ± .030
.XX ± .015
.XXX ± .010
ANGULAR TOLERANCE ± 0.5°
UNSPECIFIED RADII .02 MAX
125 FINISH — BREAK SHARP CORNERS AND EDGES
MAX .03 MIN .005

UNLESS OTHERWISE SPECIFIED DIMENSIONS ARE IN INCHES
DIMENSIONS IN [ ] ARE MILLIMETERS EQUIV. FOR REF. ONLY

ESH&Q RISK LEVEL A-1

INTERPRET DRAWING AS PER ANSI Y14.5 OR Y32.2

OUTSTANDING ECN'S

		DATE
DRWN BY	S. JARZABKOWSKI	8/01/2017
CHK BY	J. MALLEY	8/03/2017
ENG APP	S. BUDA	8/01/2017
SUPV APP	G. GANETIS	8/04/2017
QA APP	E. CHESWICK	8/02/2017
ESH APP	B. LEE	8/03/2017

WIRING DIAGRAM,
7-BM EESE B SEARCH LOGIC

DRAWING DIRECTORY	DRAWING NUMBER	REV
LT-EL-BL-EI	LT-EL-BL-EI-PPS-2070-96	A

COMPUTER REPRODUCABLE | SCALE: N/A | SHEET 1 OF 15

REV	DESCRIPTION	DATE	BY	CHECKED	APP
	SEE SHEET 1				

7-BM FOE A CHAIN LOGIC

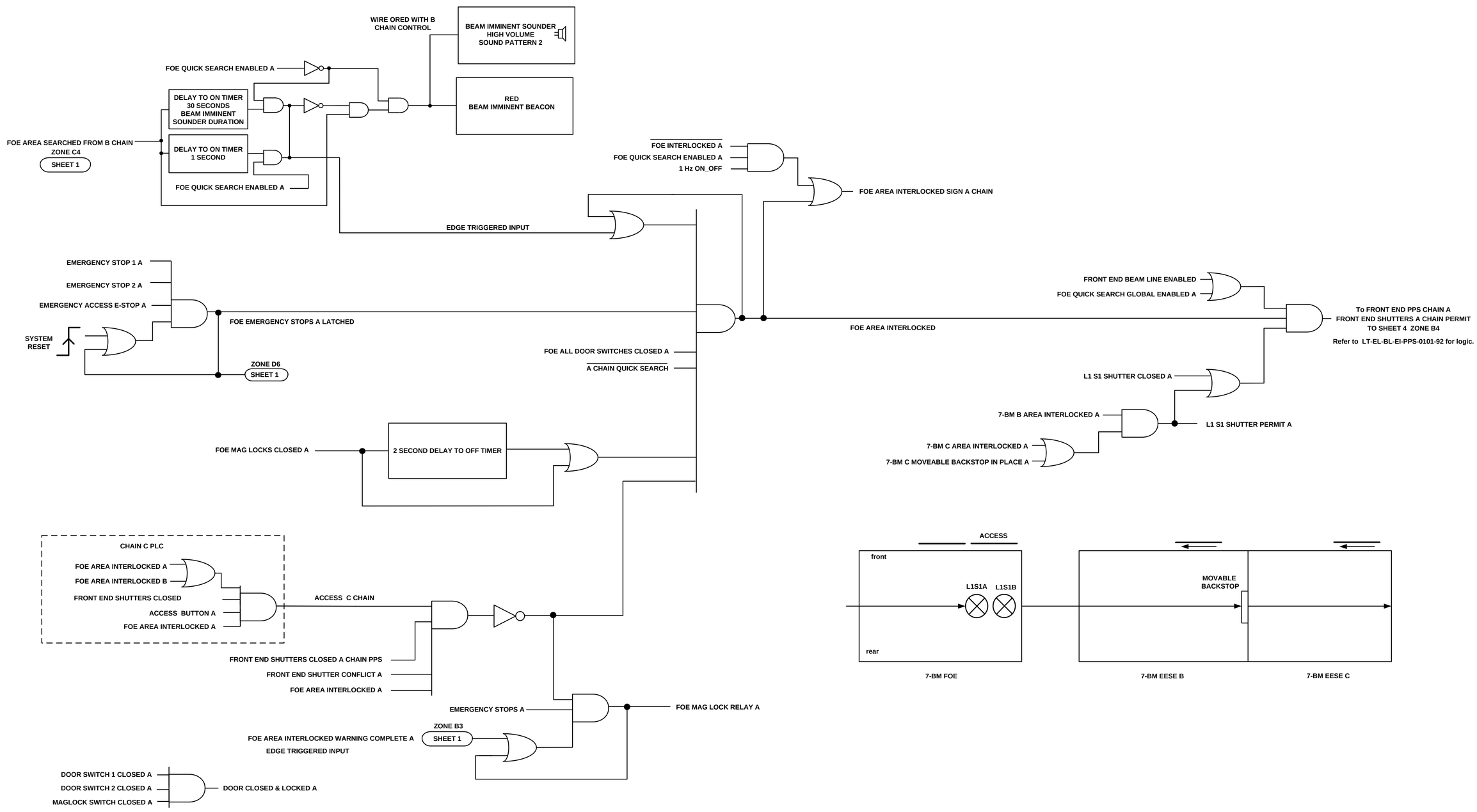

A

LT-EL-BL-EI	LT-EL-BL-EI-PPS-2070-96	A
DRAWING DIRECTORY	DRAWING NUMBER	REV

COMPUTER REPRODUCABLE | SCALE: N/A | SHEET 2 OF 15

LT-EL-BL-EI-PPS-2070-96

REV	DESCRIPTION	DATE	BY	CHECKED	APP
	SEE SHEET 1				

7-BM FOE B CHAIN LOGIC

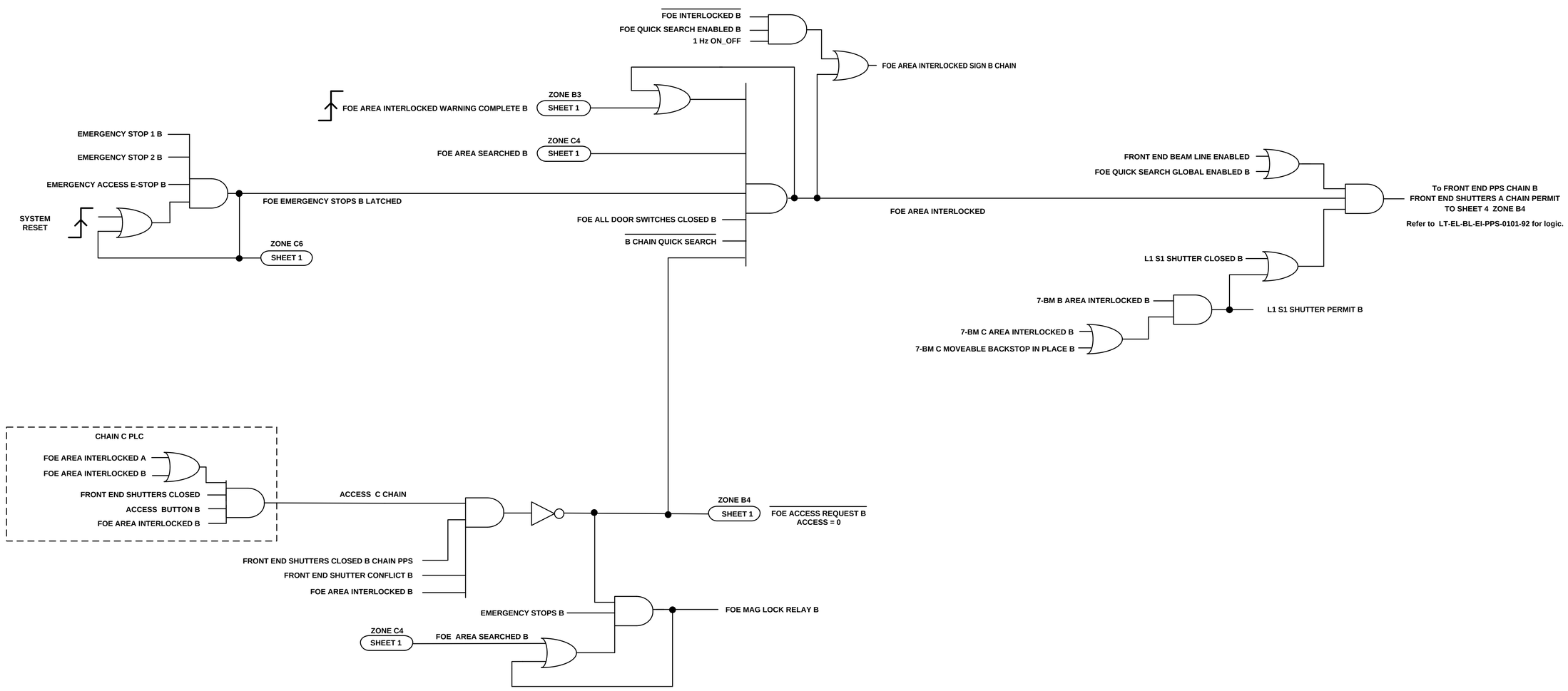

B

LT-EL-BL-EI DRAWING DIRECTORY	LT-EL-BL-EI-PPS-2070-96 DRAWING NUMBER	A REV
COMPUTER REPRODUCABLE	SCALE: N/A	SHEET 3 OF 15

LT-EL-BL-EI-PPS-2070-96

REV	DESCRIPTION	DATE	BY	CHECKED	APP
	SEE SHEET 1				

7-BM ESEE B SEARCH LOGIC

(SEARCH IN B CHAIN ONLY)

GEN II

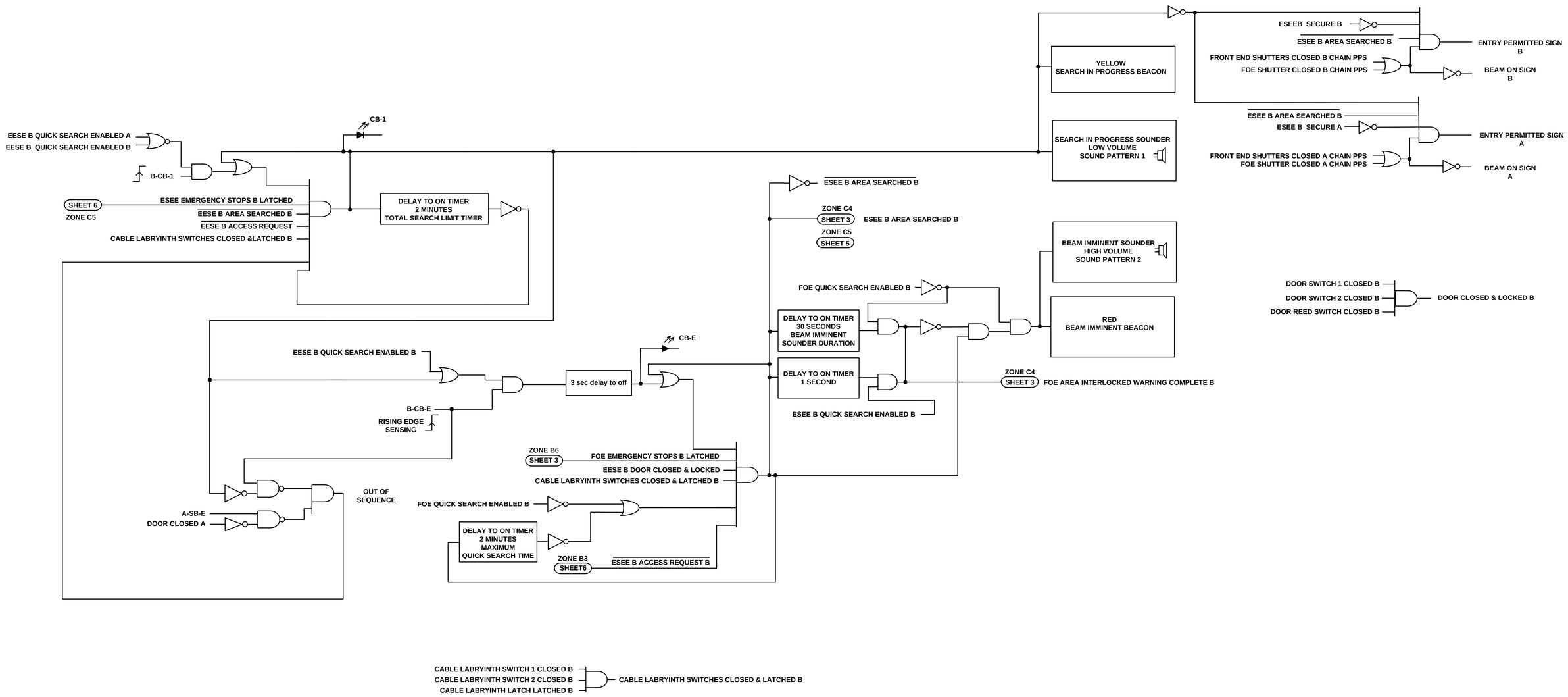

LT-EL-BL-EI	LT-EL-BL-EI-PPS-2070-96	A
DRAWING DIRECTORY	DRAWING NUMBER	REV

COMPUTER REPRODUCABLE | SCALE: N/A | SHEET 4 OF 15

LT-EL-BL-EI-PPS-2070-96

REV	DESCRIPTION	DATE	BY	CHECKED	APP
	SEE SHEET 1				

7-BM ESEE B A CHAIN LOGIC

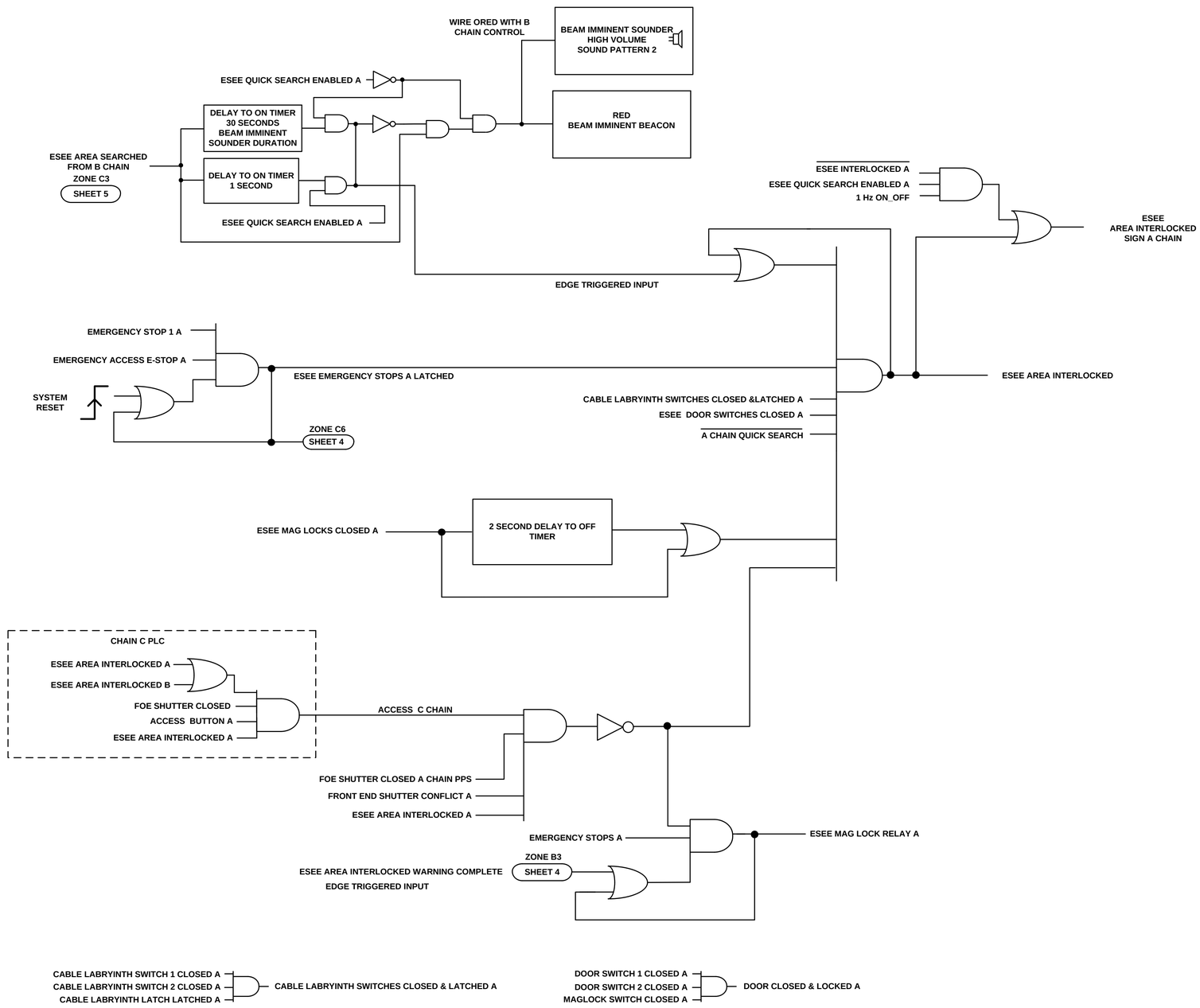

A

LT-EL-BL-EI DRAWING DIRECTORY	LT-EL-BL-EI-PPS-2070-96 DRAWING NUMBER	A REV
COMPUTER REPRODUCABLE	SCALE: N/A	SHEET 5 OF 15

LT-EL-BL-EI-PPS-2070-96

7-BM ESEE B B CHAIN LOGIC

REV	DESCRIPTION	DATE	BY	CHECKED	APP
	SEE SHEET 1				

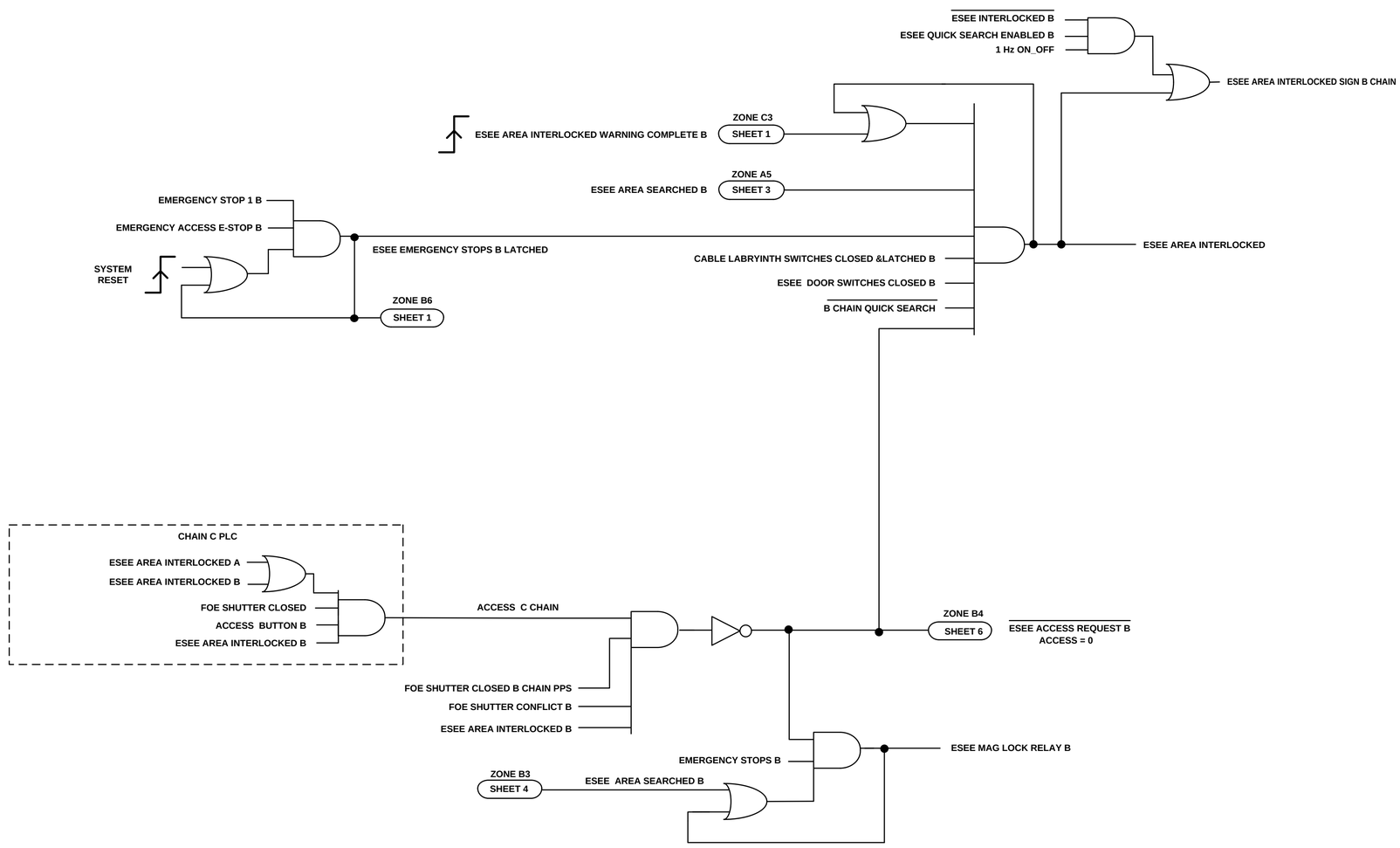

B

LT-EL-BL-EI DRAWING DIRECTORY	LT-EL-BL-EI-PPS-2070-96 DRAWING NUMBER	A REV
COMPUTER REPRODUCABLE	SCALE: N/A	SHEET 6 OF 15

LT-EL-BL-EI-PPS-2070-96

REV	DESCRIPTION	DATE	BY	CHECKED	APP
	SEE SHEET 1				

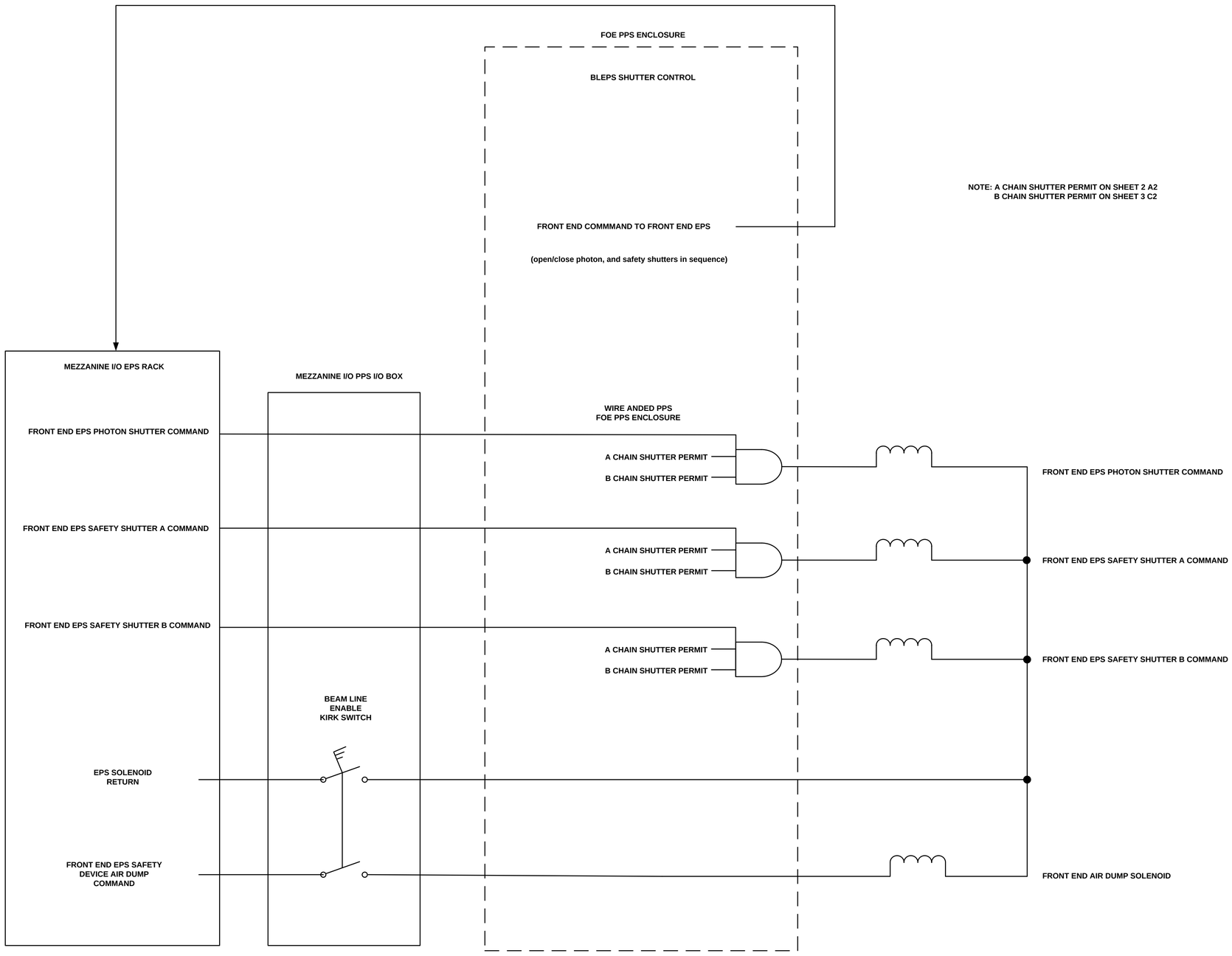

NOTE: A CHAIN SHUTTER PERMIT ON SHEET 2 A2
B CHAIN SHUTTER PERMIT ON SHEET 3 C2

LT-EL-BL-EI-PPS-2070-96

LT-EL-BL-EI DRAWING DIRECTORY	LT-EL-BL-EI-PPS-2070-96 DRAWING NUMBER	A REV
COMPUTER REPRODUCABLE	SCALE: N/A	SHEET 7 OF 15

REV	DESCRIPTION	DATE	BY	CHECKED	APP
	SEE SHEET 1				

7-BM ESEE C SEARCH LOGIC

(SEARCH IN B CHAIN ONLY)

GEN II

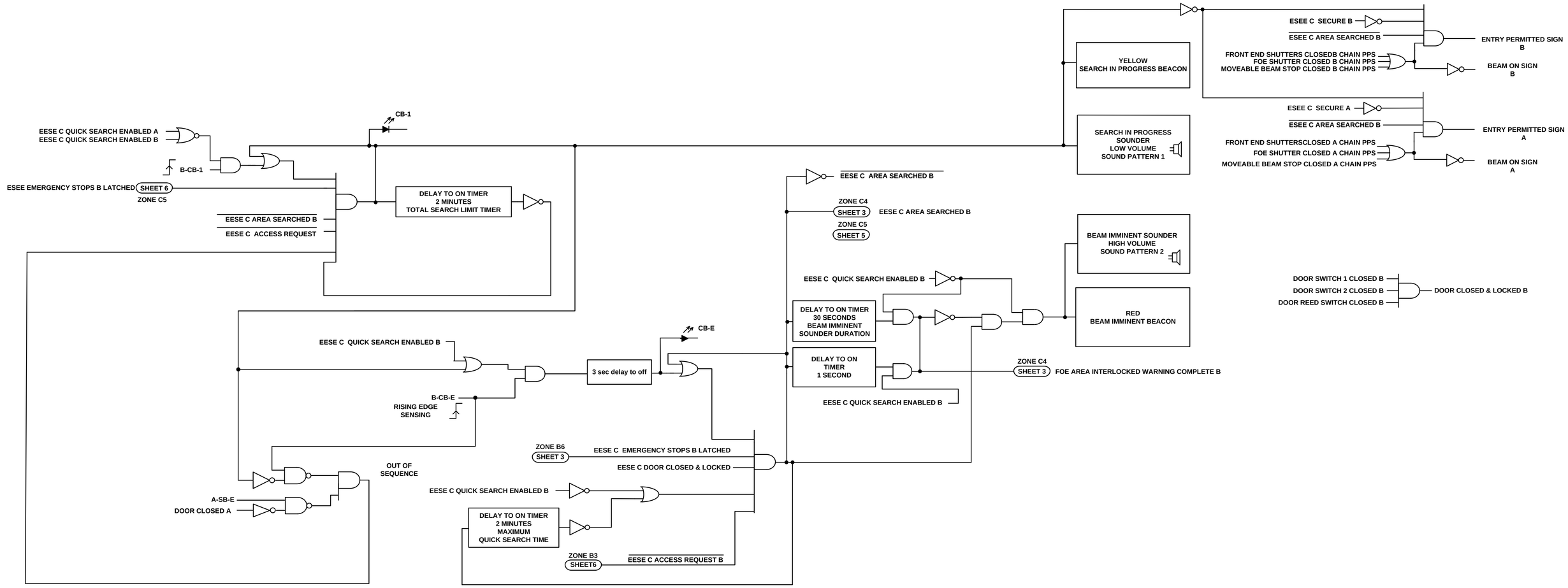

LT-EL-BL-EI	LT-EL-BL-EI-PPS-2070-96	A
DRAWING DIRECTORY	DRAWING NUMBER	REV

COMPUTER REPRODUCABLE | SCALE: N/A | SHEET 8 OF 15

LT-EL-BL-EI-PPS-2070-96

REV	DESCRIPTION	DATE	BY	CHECKED	APP
	SEE SHEET 1				

7-BM ESEE C A CHAIN LOGIC

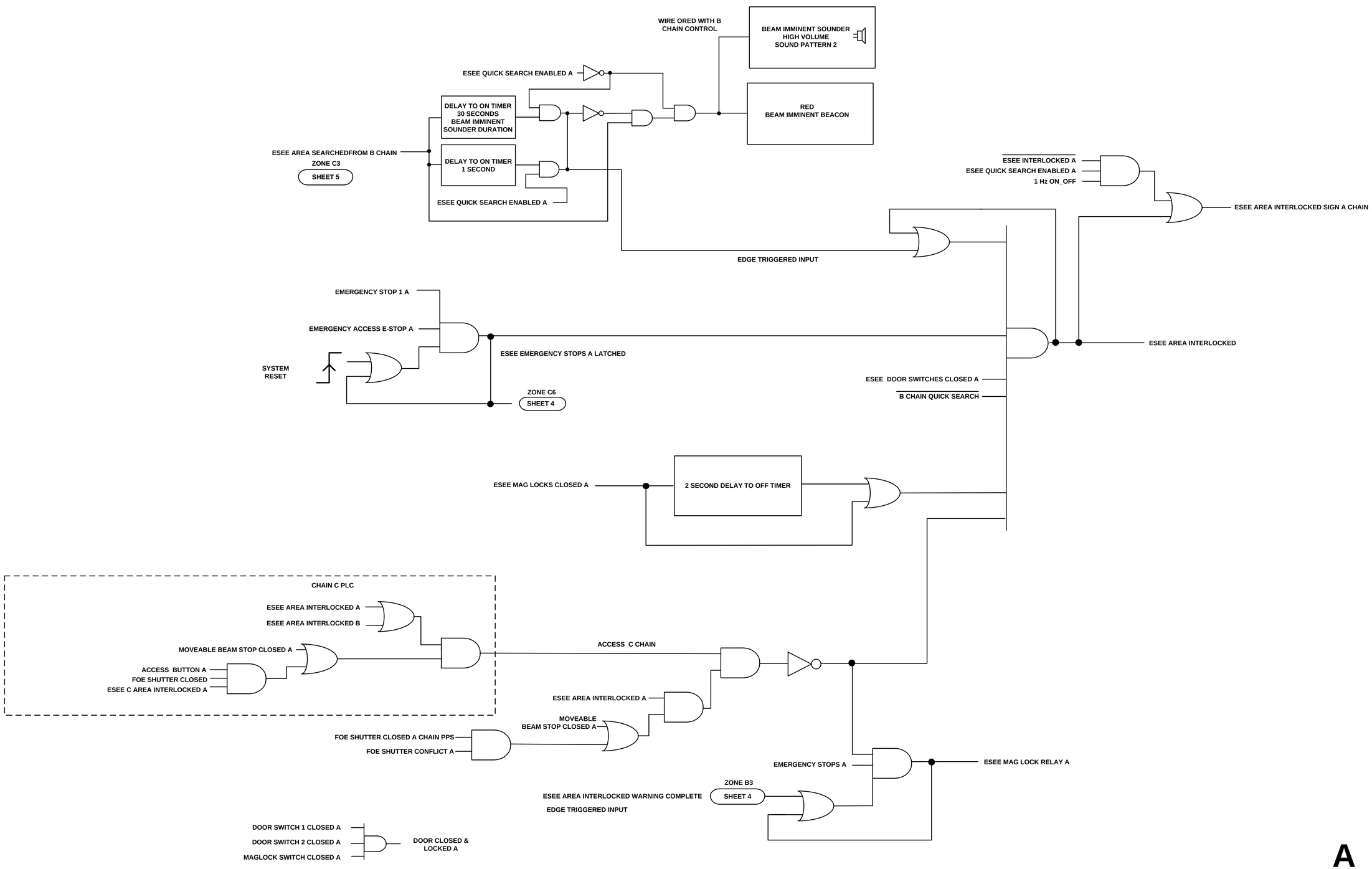

A

LT-EL-BL-EI DRAWING DIRECTORY	LT-EL-BL-EI-PPS-2070-96 DRAWING NUMBER	A REV
COMPUTER REPRODUCABLE	SCALE: N/A	SHEET 9 OF 15

LT-EL-BL-EI-PPS-2070-96

REV	DESCRIPTION	DATE	BY	CHECKED	APP
	SEE SHEET 1				

7-BM ESEE C B CHAIN LOGIC

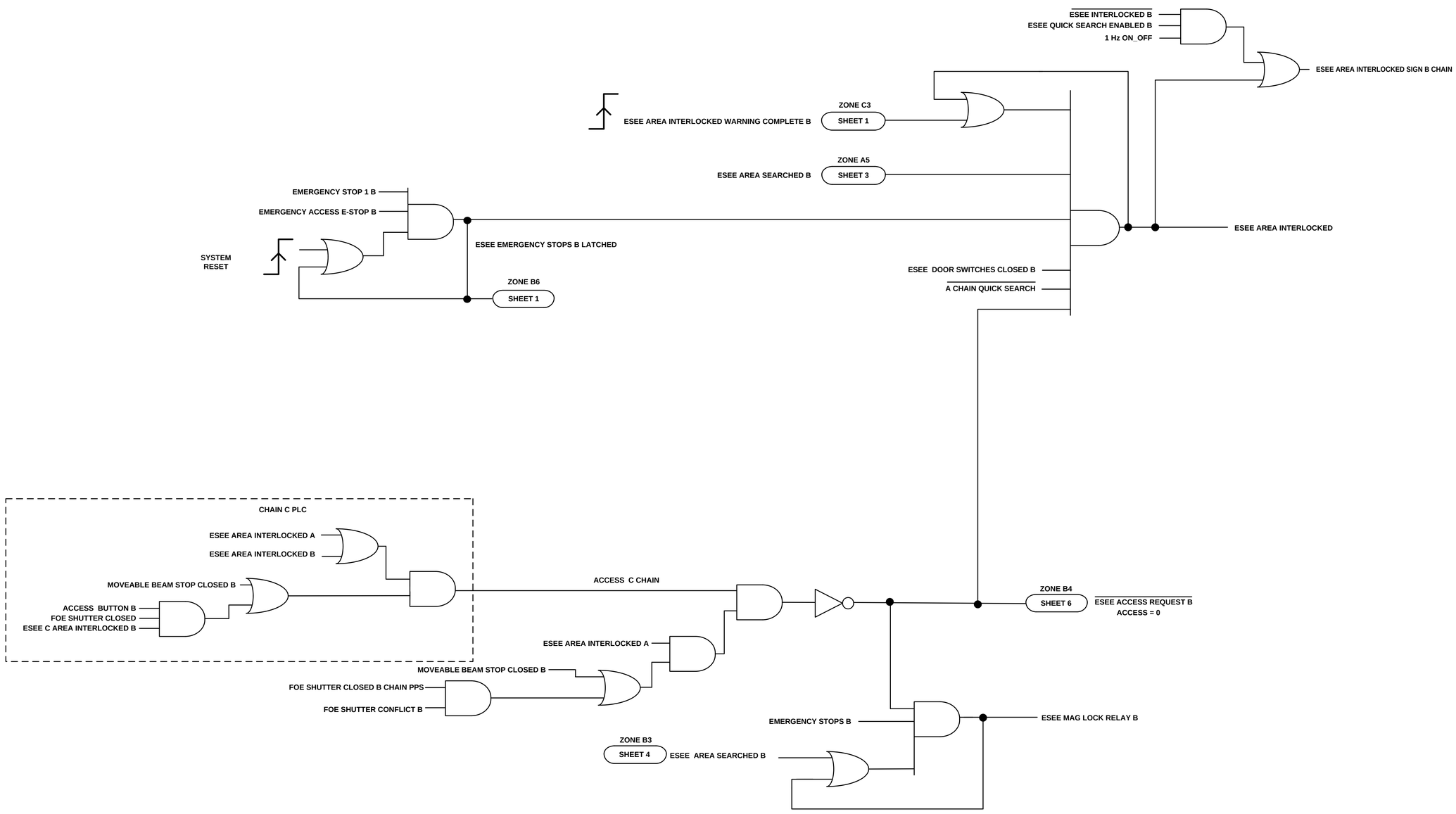

B

LT-EL-BL-EI DRAWING DIRECTORY	LT-EL-BL-EI-PPS-2070-96 DRAWING NUMBER	A REV
COMPUTER REPRODUCABLE	SCALE: N/A	SHEET 10 OF 15

LT-EL-BL-EI-PPS-2070-96

REV	DESCRIPTION	DATE	BY	CHECKED	APP
	SEE SHEET 1				

C CHAIN DOOR CONTROL FOE

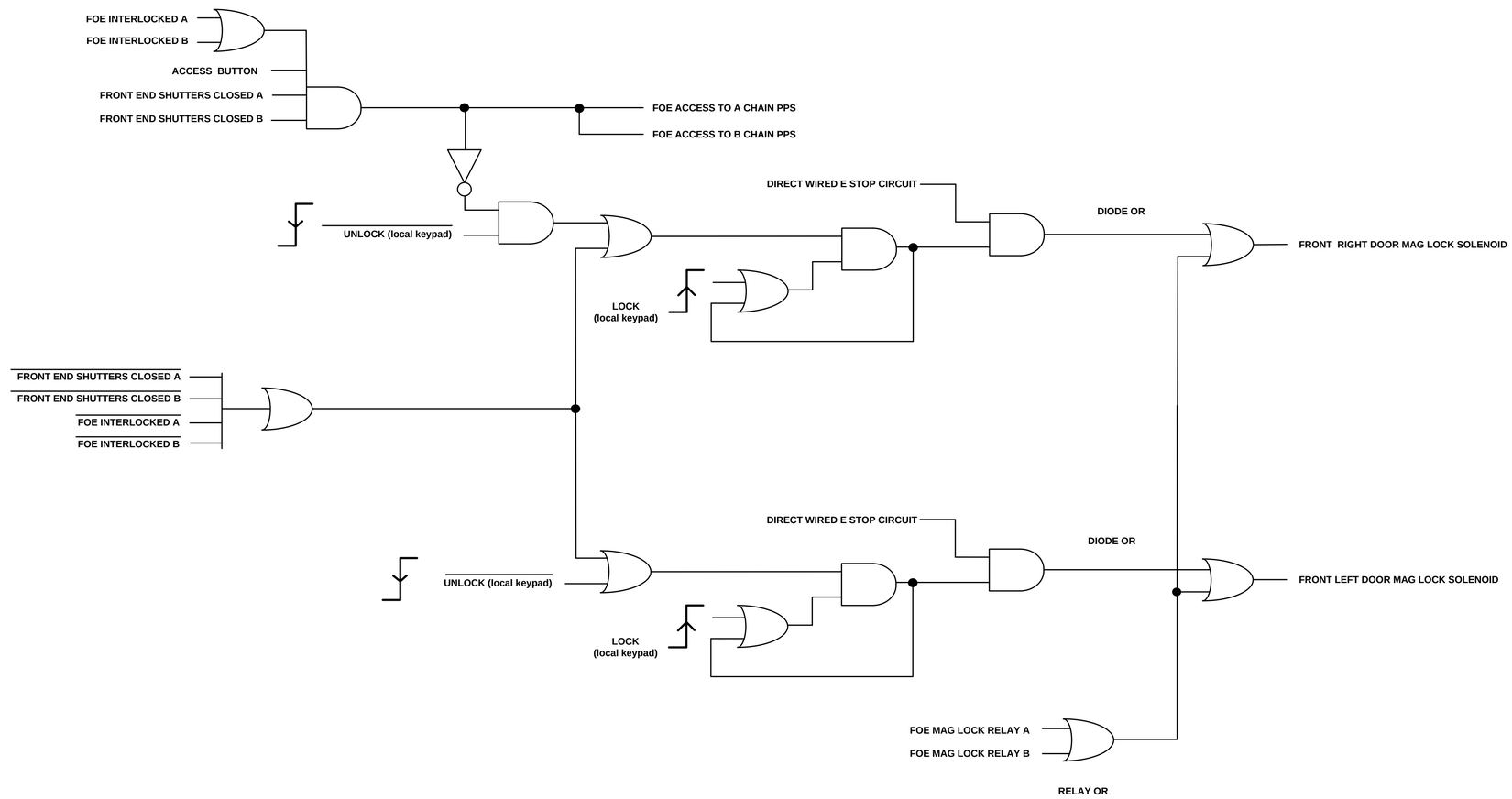

EPS

LT-EL-BL-EI DRAWING DIRECTORY	LT-EL-BL-EI-PPS-2070-96 DRAWING NUMBER	A REV
COMPUTER REPRODUCABLE	SCALE: N/A	SHEET 11 OF 15

LT-EL-BL-EI-PPS-2070-96

REV	DESCRIPTION	DATE	BY	CHECKED	APP
	SEE SHEET 1				

C CHAIN DOOR CONTROL ESEE B & C

ESEE B DOOR LOCK CONTROL

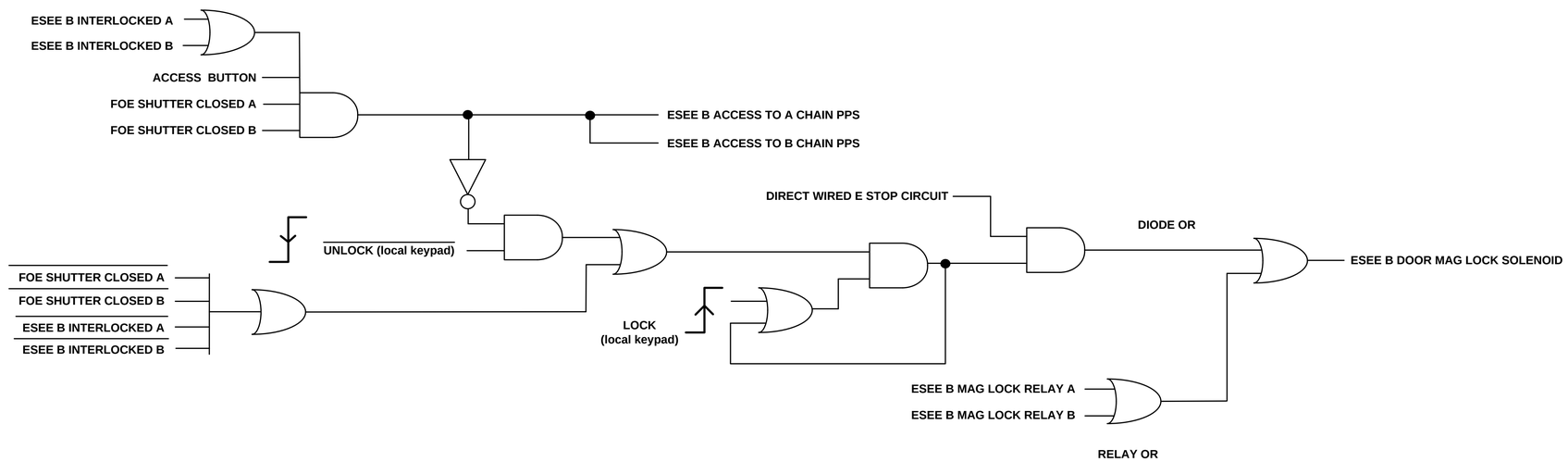

ESEE C DOOR LOCK CONTROL

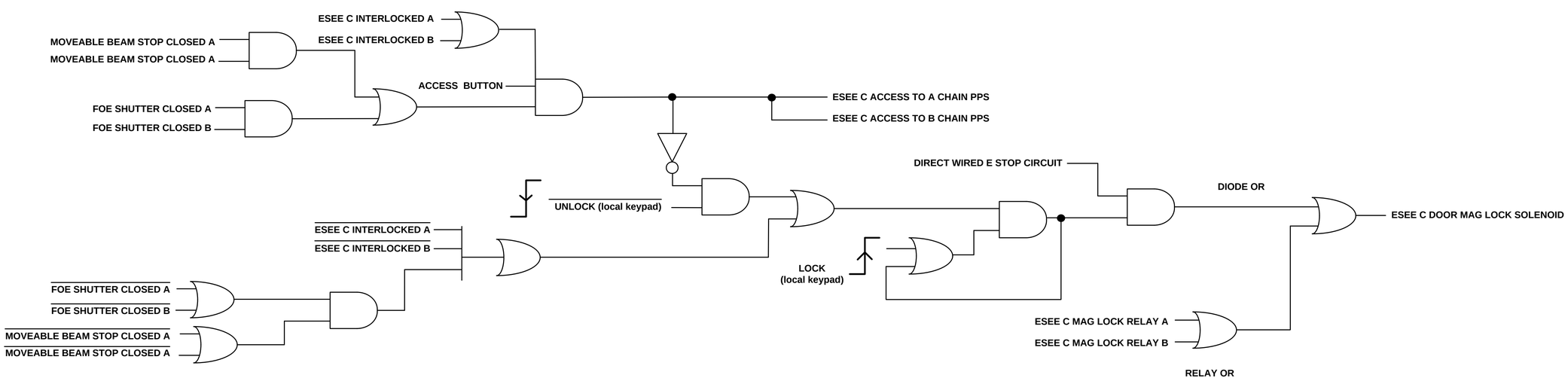

EPS

LT-EL-BL-EI	LT-EL-BL-EI-PPS-2070-96	A
DRAWING DIRECTORY	DRAWING NUMBER	REV

COMPUTER REPRODUCABLE | SCALE: N/A | SHEET 12 OF 15

LT-EL-BL-EI-PPS-2070-96

REV	DESCRIPTION	DATE	BY	CHECKED	APP
	SEE SHEET 1				

C CHAIN SHUTTER CONTROL

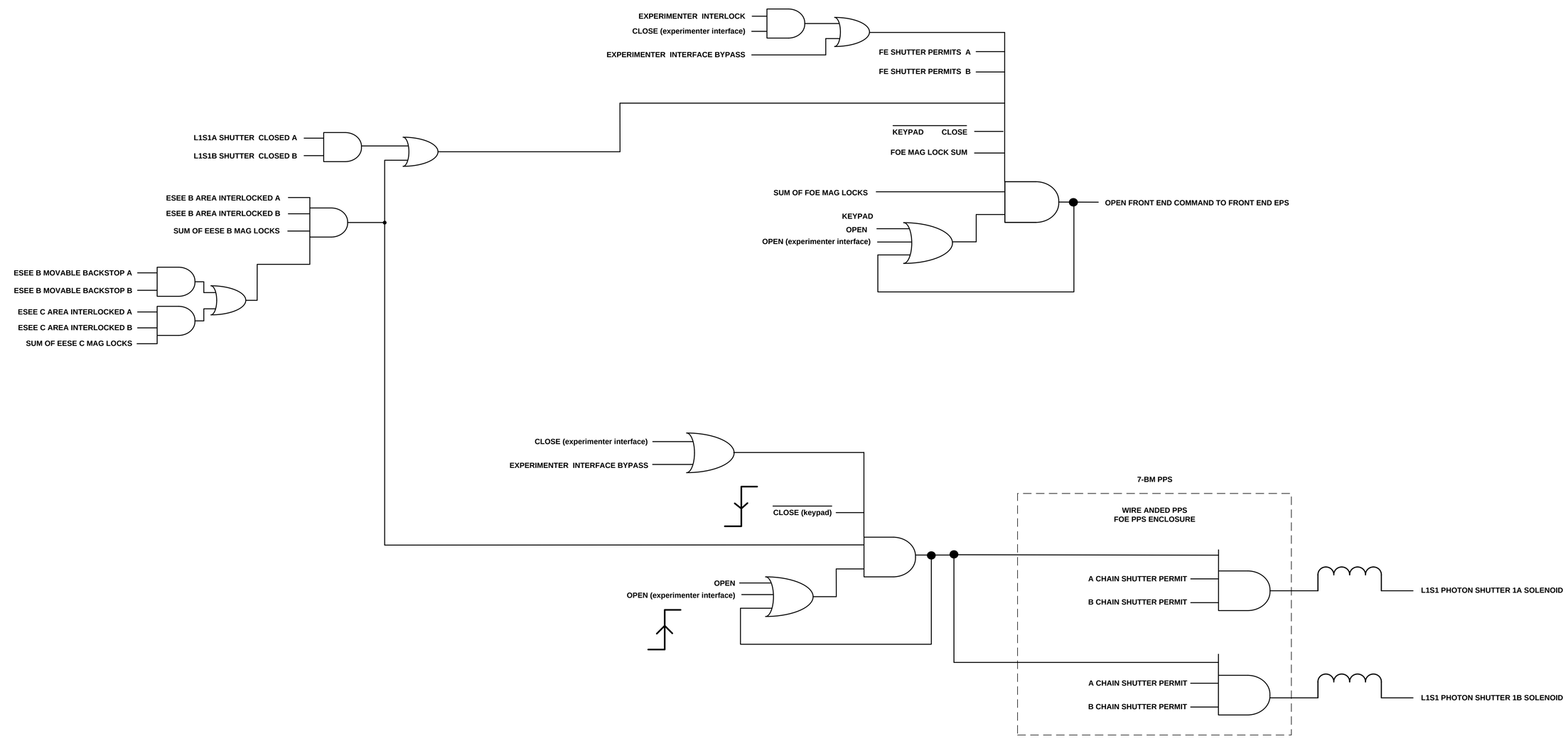

EPS

LT-EL-BL-EI (DRAWING DIRECTORY)	LT-EL-BL-EI-PPS-2070-96 (DRAWING NUMBER)	A (REV)
COMPUTER REPRODUCABLE	SCALE: N/A	SHEET 13 OF 15

LT-EL-BL-EI-PPS-2070-96

REV	DESCRIPTION	DATE	BY	CHECKED	APP
	SEE SHEET 1				

FAULTS AND ALARMS A CHAIN

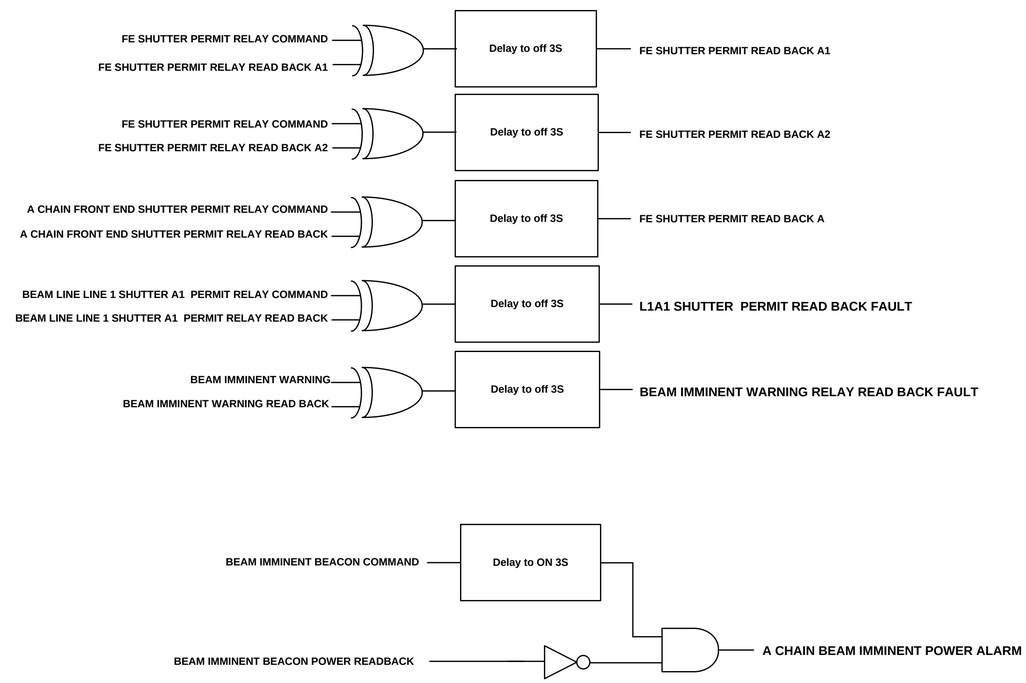

LT-EL-BL-EI DRAWING DIRECTORY	LT-EL-BL-EI-PPS-2070-96 DRAWING NUMBER	A REV
COMPUTER REPRODUCABLE	SCALE: N/A	SHEET 14 OF 15

LT-EL-BL-EI-PPS-2070-96

REV	DESCRIPTION	DATE	BY	CHECKED	APP
	SEE SHEET 1				

FAULTS AND ALARMS B CHAIN

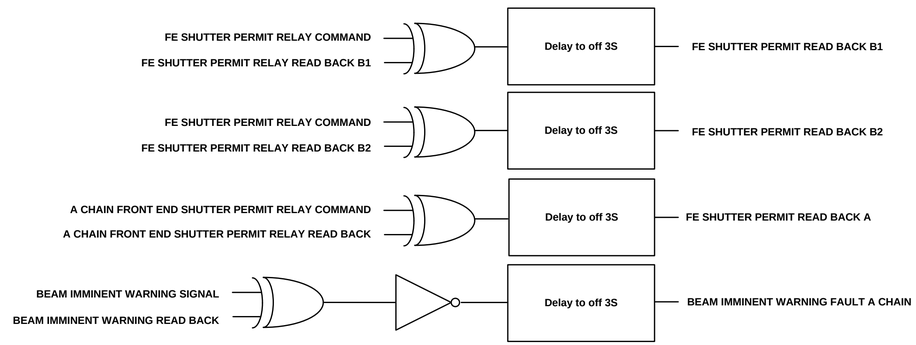

B CHAIN SAFETY SWITCH FAULTS ARE GENERATED BY FUNCTION BLOCKS, DOORS, CABLE LABYRINTHS

B CHAIN PROXIMITY SENSOR FAULT = DIRECT FROM SENSOR MODULE

B CHAIN HARDWARE FAULT = GENERATED FROM SYSTEM FAULT DATA

B CHAIN BEAM LINE FAULTA ARE SENT TO THE CONTROL ROOM ONLY WHEN BEAMLINE IS ENABLED AT FRONT END

LT-EL-BL-EI-PPS-2070-96

LT-EL-BL-EI (DRAWING DIRECTORY)	LT-EL-BL-EI-PPS-2070-96 (DRAWING NUMBER)	A (REV)
COMPUTER REPRODUCABLE	SCALE: N/A	SHEET 15 OF 15

REV	DESCRIPTION	DATE	BY	CHECKED	APP
A	INITIAL RELEASE	01/27/2014	SEJ	JM	SB
B	REVISED PER ECN-014-758	03/07/2014	CG	JM	SB
C	REVISED PER ECN-014-824	07/07/2014	SEJ	JM	SB
D	REVISED PER ECN-015-1181	04/27/2015	CG	JM	SB
E	REVISED PER ECN-017-1795	07/11/2017	SEJ	JM	SB

TO :
LT-ECN-017-1795
PAGE OF

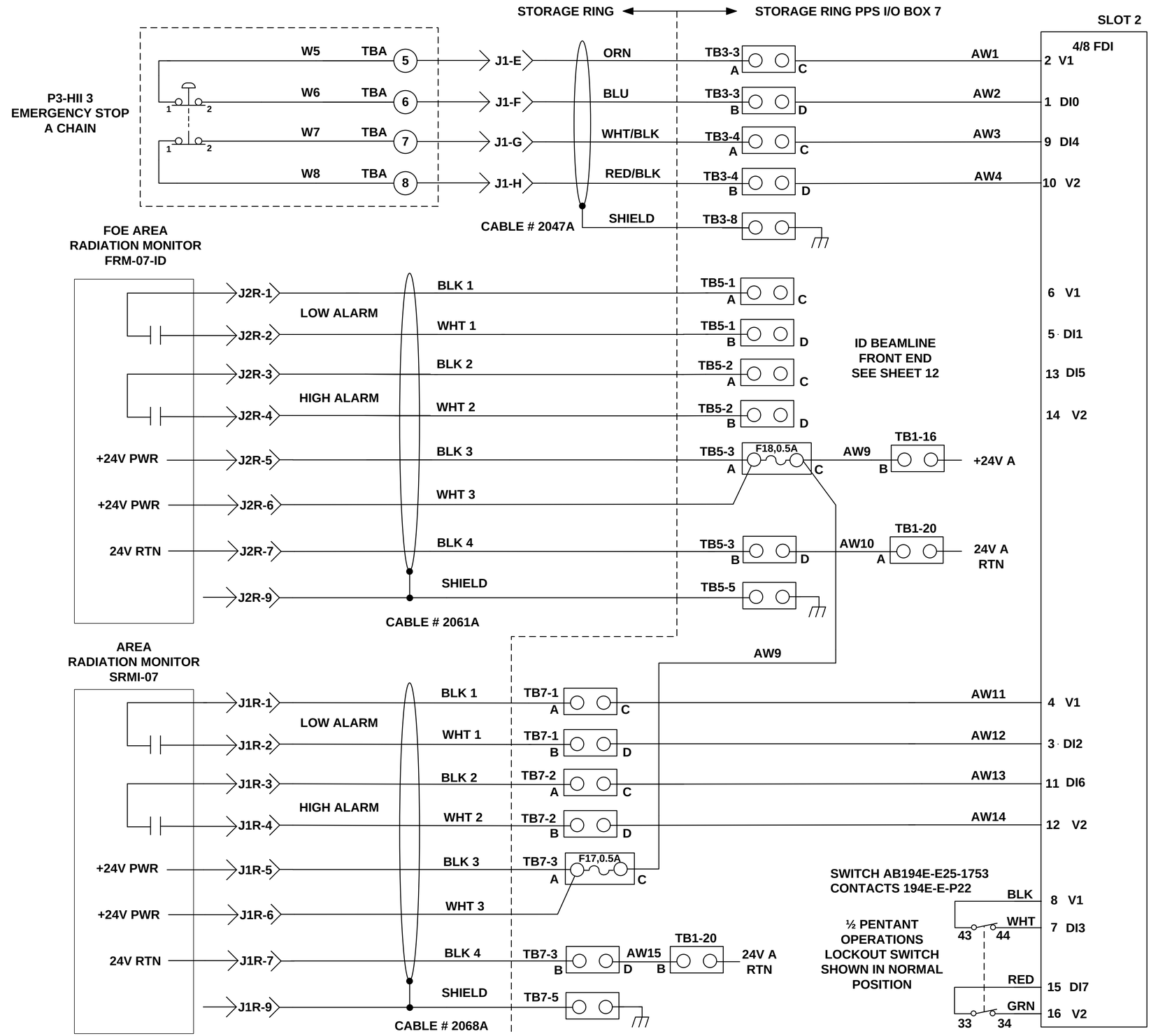

ID BEAMLINE INSTALLED [X]
BM BEAMLINE INSTALLED [X]

COMMON GROUP

A

SEE SEPARATE WIRE RUNNING LIST – RL LT-EL-SR-EI-PPS-0207-90
SEE SEPARATE PARTS LIST – PL LT-EL-SR-EI-PPS-0207-90

LT-EL-SR-EI-PPS-0207-90

BROOKHAVEN NATIONAL LABORATORY

BROOKHAVEN NATIONAL LABORATORY
BROOKHAVEN SCIENCE ASSOCIATES
UPTON, NEW YORK 11973
Exploring Life's Mysteries, Protecting its Future

NSLS II NATIONAL SYNCHROTRON LIGHT SOURCE II

UNLESS OTHERWISE SPECIFIED
INTEGER TOLERANCES ± .06
DECIMAL TOLERANCES
.X ± .030
.XX ± .015
.XXX ± .010
ANGULAR TOLERANCE ± 0.5°
UNSPECIFIED RADII .02 MAX
125 BREAK SHARP CORNERS AND EDGES
FINISH MAX .03 MIN .005

UNLESS OTHERWISE SPECIFIED DIMENSIONS ARE IN INCHES DIMENSIONS IN [ ] ARE MILLIMETERS EQUIV. FOR REF. ONLY
INTERPRET DRAWING AS PER ANSI Y14.5 OR Y32.2

ESH&Q RISK LEVEL A-1

		DATE	OUTSTANDING ECN'S
DRWN BY	S. JARZABKOWSKI	01/27/2014	
CHK BY	J.MALLEY	01/30/2014	
ENG APP	S. BUDA	01/30/2014	
SUPV APP	G. GANETIS	01/31/2014	
QA APP	E.CHESWICK	01/31/2014	
ESH APP	R. LEE	01/31/2014	

JOB NUMBER | USED ON DWG. NO.

WIRING DIAGRAM,
STORAGE RING PPS I/O BOX 7
TYPE 1 A CHAIN & B CHAIN

LT-EL-SR-EI (DRAWING DIRECTORY) | LT-EL-SR-EI-PPS-0207-90 (DRAWING NUMBER) | E (REV)

WBS # 1.03.06.01.03 | SCALE: N/A | SHEET 1 OF 61

REV	DESCRIPTION	DATE	BY	CHECKED	APP
	SEE SHEET 1				

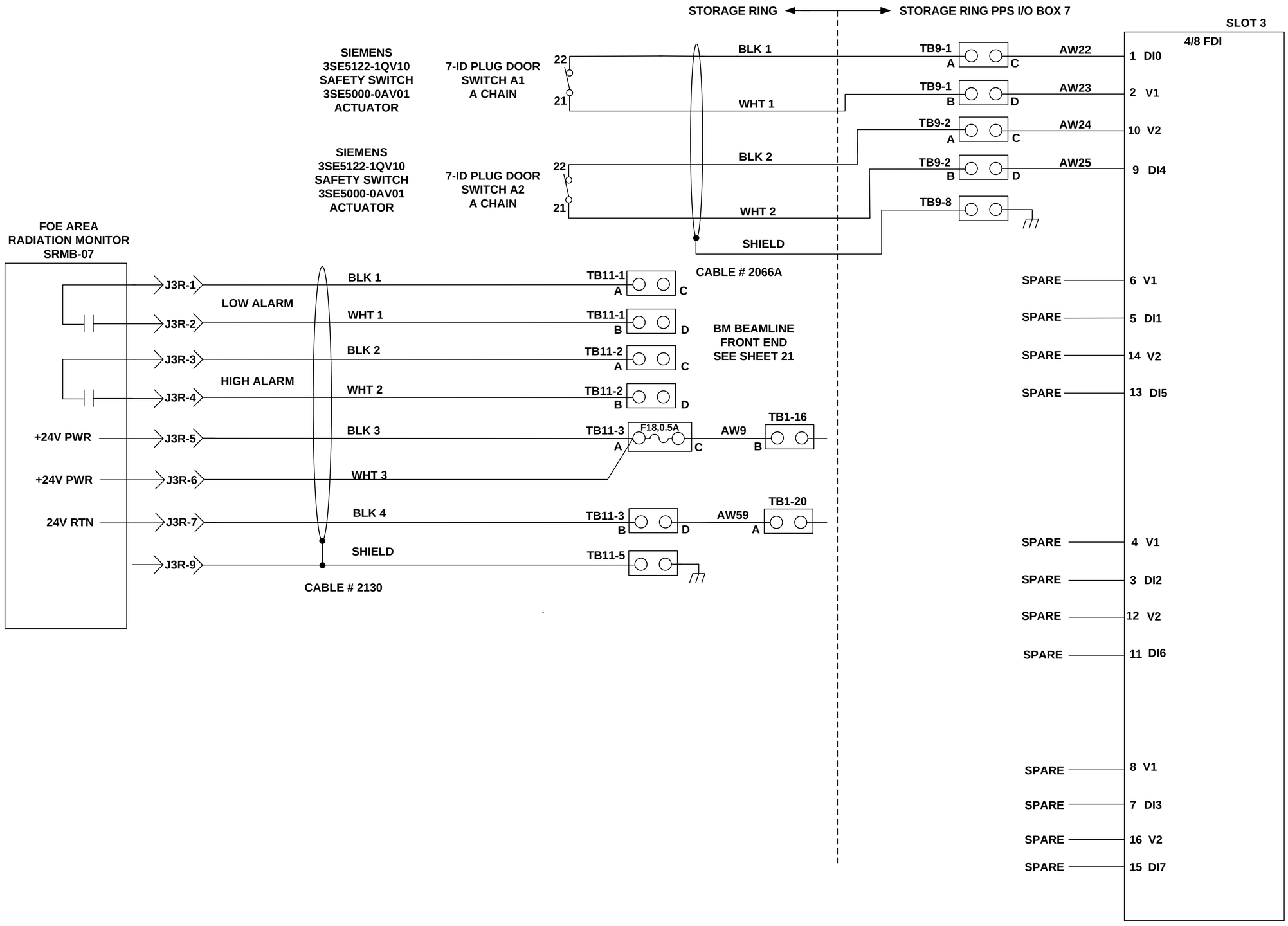

TO :
LT-ECN-017-1795
PAGE OF

COMMON GROUP

A

LT-EL-SR-EI-PPS-0207-90

LT-EL-SR-EI (DRAWING DIRECTORY)	LT-EL-SR-EI-PPS-0207-90 (DRAWING NUMBER)	E (REV)
COMPUTER REPRODUCABLE	SCALE: N/A	SHEET 2 OF 61

REV	DESCRIPTION	DATE	BY	CHECKED	APP
	SEE SHEET 1				

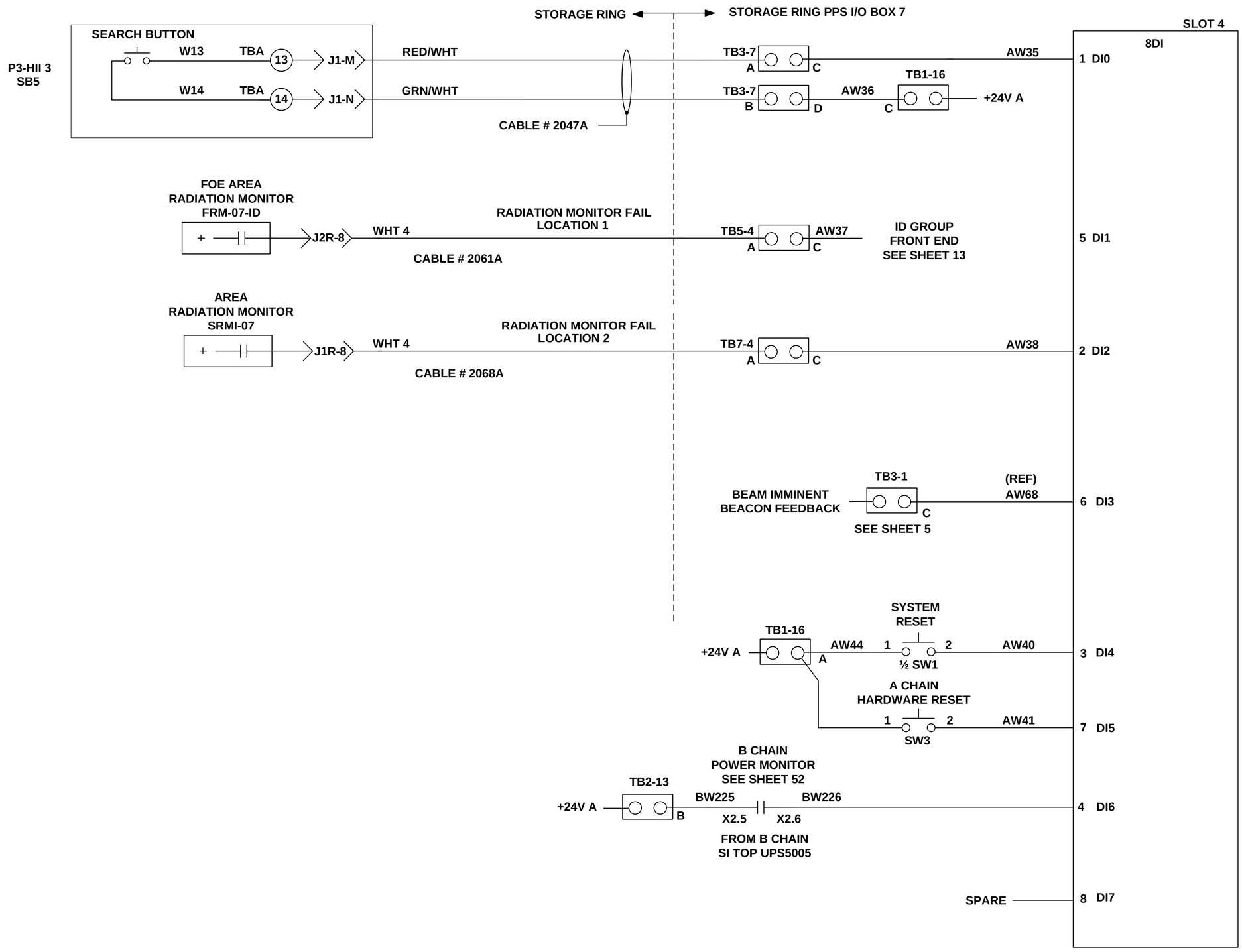

TO :
LT-ECN-017-1795
PAGE OF

COMMON GROUP

A

LT-EL-SR-EI-PPS-0207-90

LT-EL-SR-EI (DRAWING DIRECTORY)	LT-EL-SR-EI-PPS-0207-90 (DRAWING NUMBER)	E (REV)
COMPUTER REPRODUCABLE	SCALE: N/A	SHEET 3 OF 61

REV	DESCRIPTION	DATE	BY	CHECKED	APP
	SEE SHEET 1				

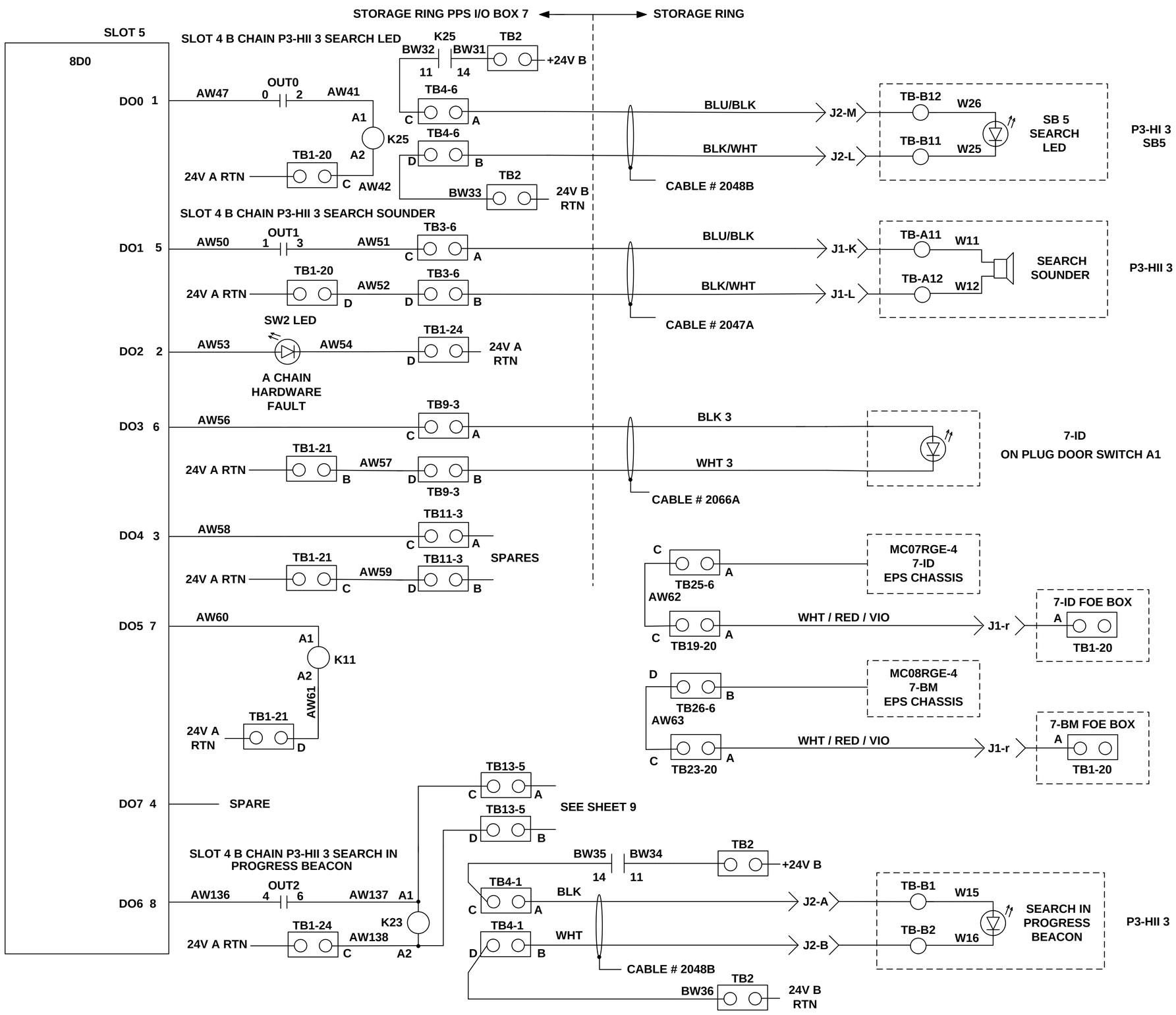

TO :
LT-ECN-017-1795
PAGE OF

COMMON GROUP

A

LT-EL-SR-EI-PPS-0207-90

LT-EL-SR-EI (DRAWING DIRECTORY)	LT-EL-SR-EI-PPS-0207-90 (DRAWING NUMBER)	E (REV)
COMPUTER REPRODUCABLE	SCALE: N/A	SHEET 4 OF 61

REV	DESCRIPTION	DATE	BY	CHECKED	APP
	SEE SHEET 1				

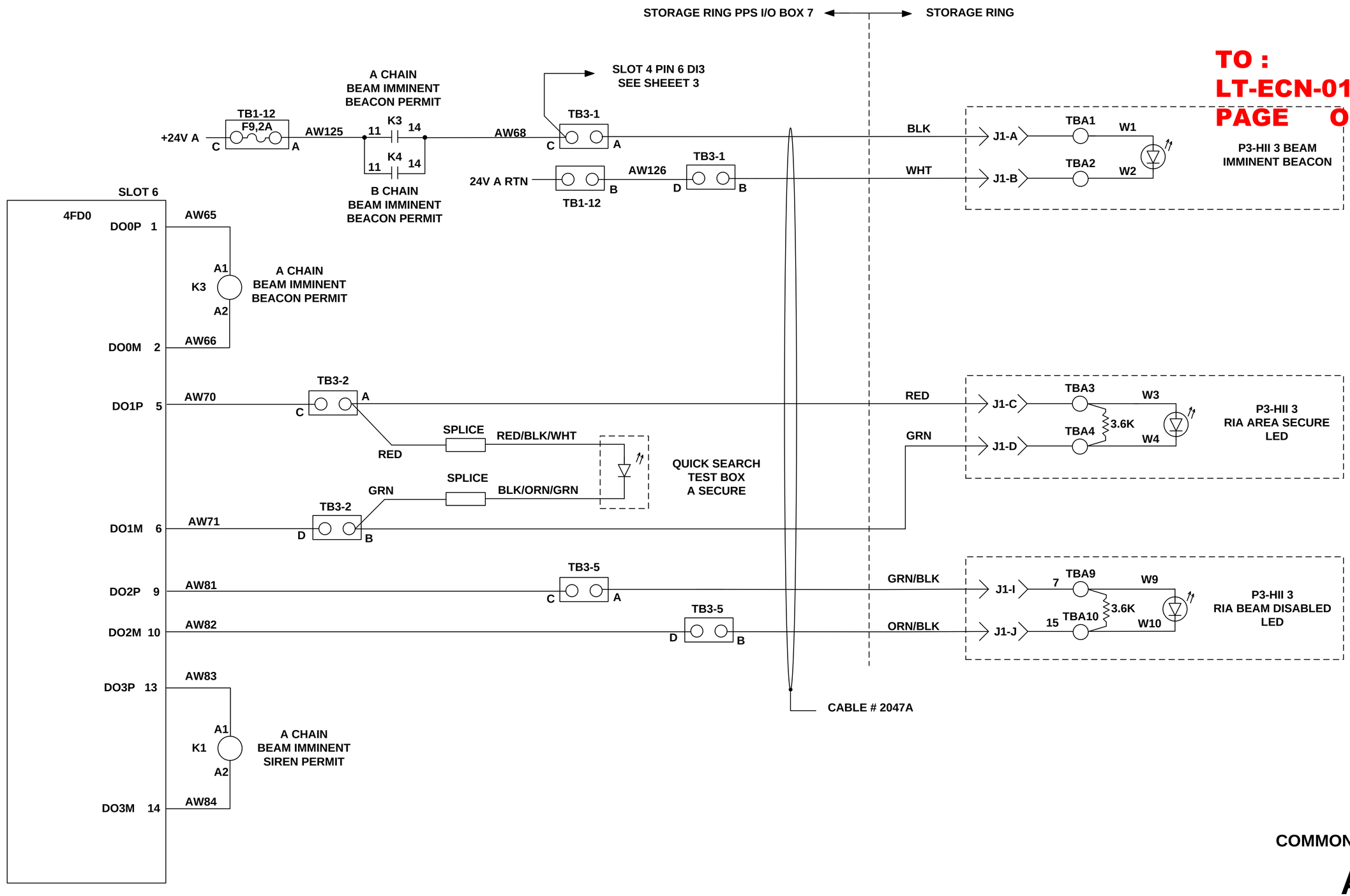

COMMON GROUP

A

LT-EL-SR-EI (DRAWING DIRECTORY)	LT-EL-SR-EI-PPS-0207-90 (DRAWING NUMBER)	E (REV)
COMPUTER REPRODUCABLE	SCALE: N/A	SHEET 5 OF 61

LT-EL-SR-EI-PPS-0207-90

REV	DESCRIPTION	DATE	BY	CHECKED	APP
	SEE SHEET 1				

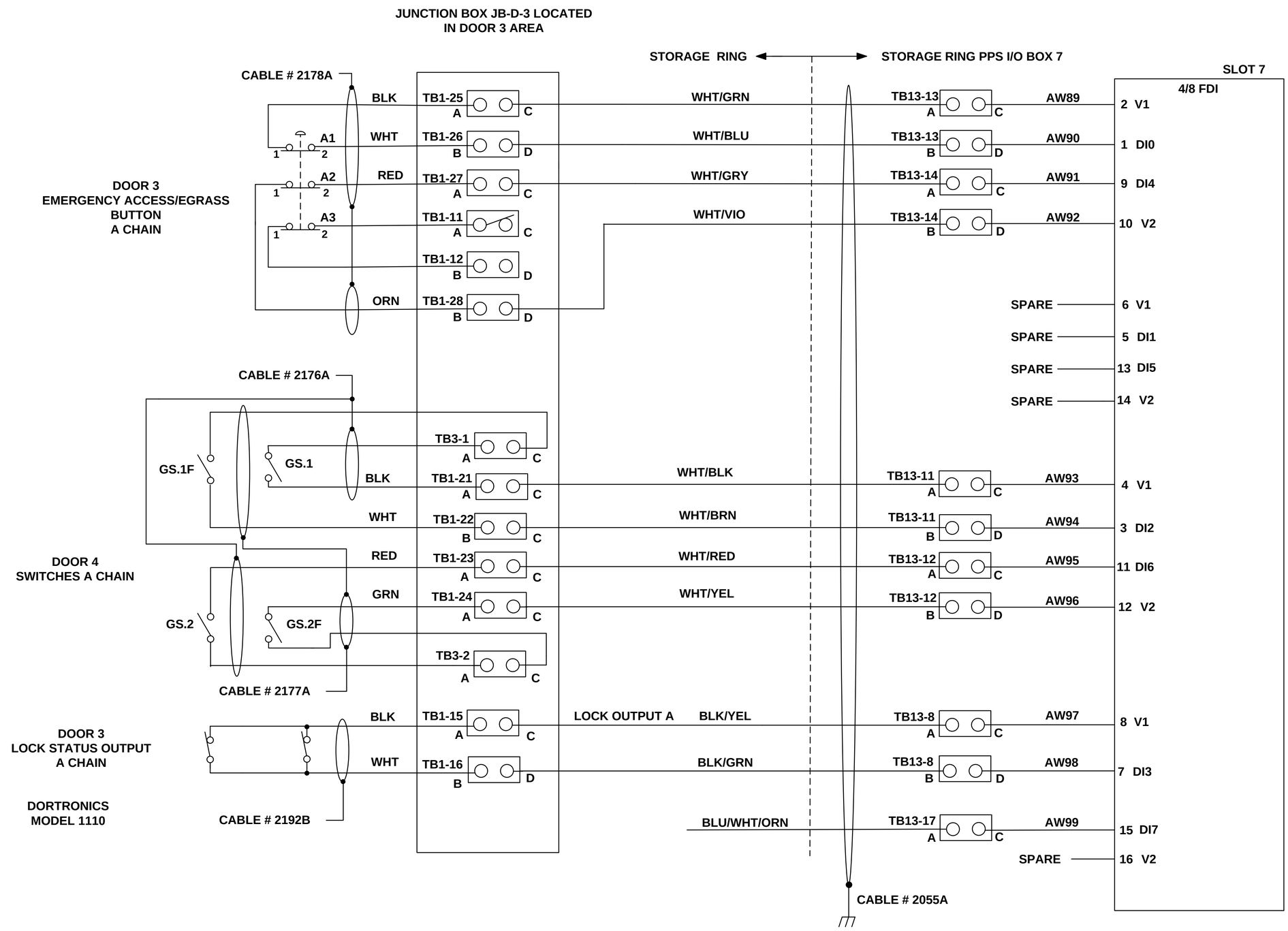

TO :
LT-ECN-017-1795
PAGE OF

GATE / LABYRINTH GROUP
DOOR 3

A

LT-EL-SR-EI-PPS-0207-90

LT-EL-SR-EI (DRAWING DIRECTORY)	LT-EL-SR-EI-PPS-0207-90 (DRAWING NUMBER)	E (REV)
COMPUTER REPRODUCABLE	SCALE: N/A	SHEET 6 OF 61

REV	DESCRIPTION	DATE	BY	CHECKED	APP
	SEE SHEET 1				

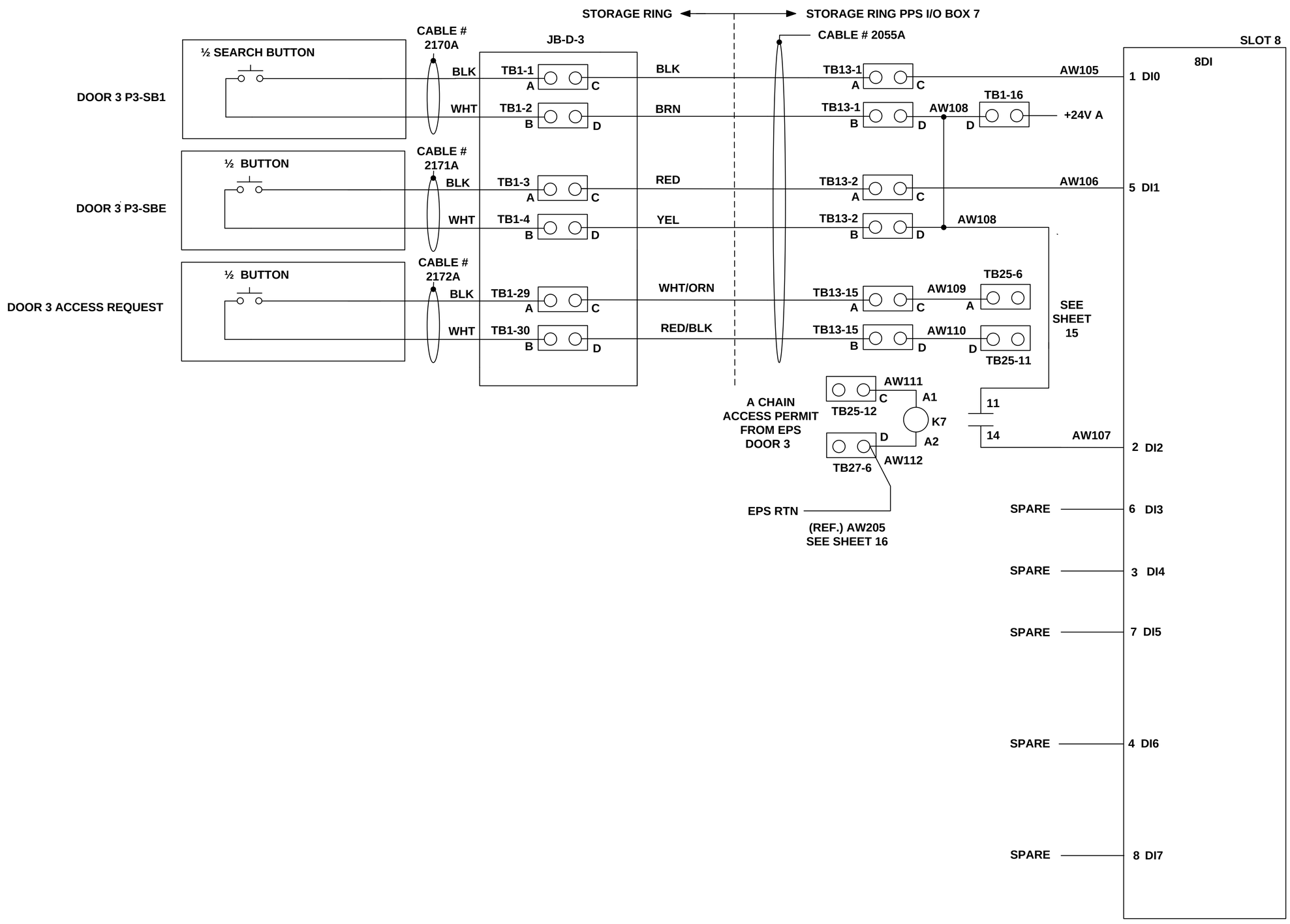

TO :
LT-ECN-017-1795
PAGE OF

GATE / LABYRINTH GROUP
DOOR 3

A

LT-EL-SR-EI (DRAWING DIRECTORY)	LT-EL-SR-EI-PPS-0207-90 (DRAWING NUMBER)	E (REV)
COMPUTER REPRODUCABLE	SCALE: N/A	SHEET 7 OF 61

LT-EL-SR-EI-PPS-0207-90

REV	DESCRIPTION	DATE	BY	CHECKED	APP
	SEE SHEET 1				

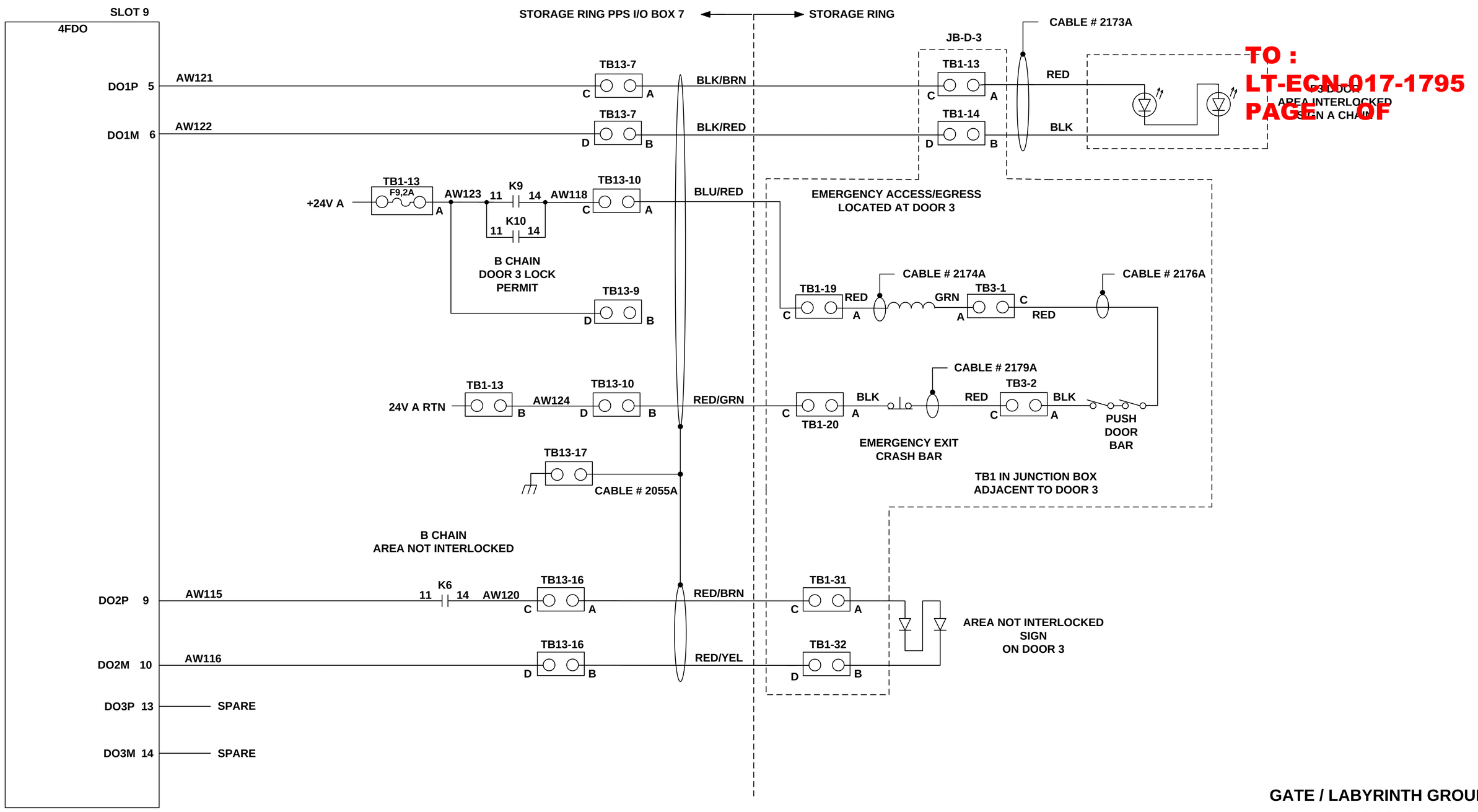

GATE / LABYRINTH GROUP
DOOR 3

A

LT-EL-SR-EI (DRAWING DIRECTORY)	LT-EL-SR-EI-PPS-0207-90 (DRAWING NUMBER)	E (REV)
COMPUTER REPRODUCABLE	SCALE: N/A	SHEET 8 OF 61

LT-EL-SR-EI-PPS-0207-90

REV	DESCRIPTION	DATE	BY	CHECKED	APP
	SEE SHEET 1				

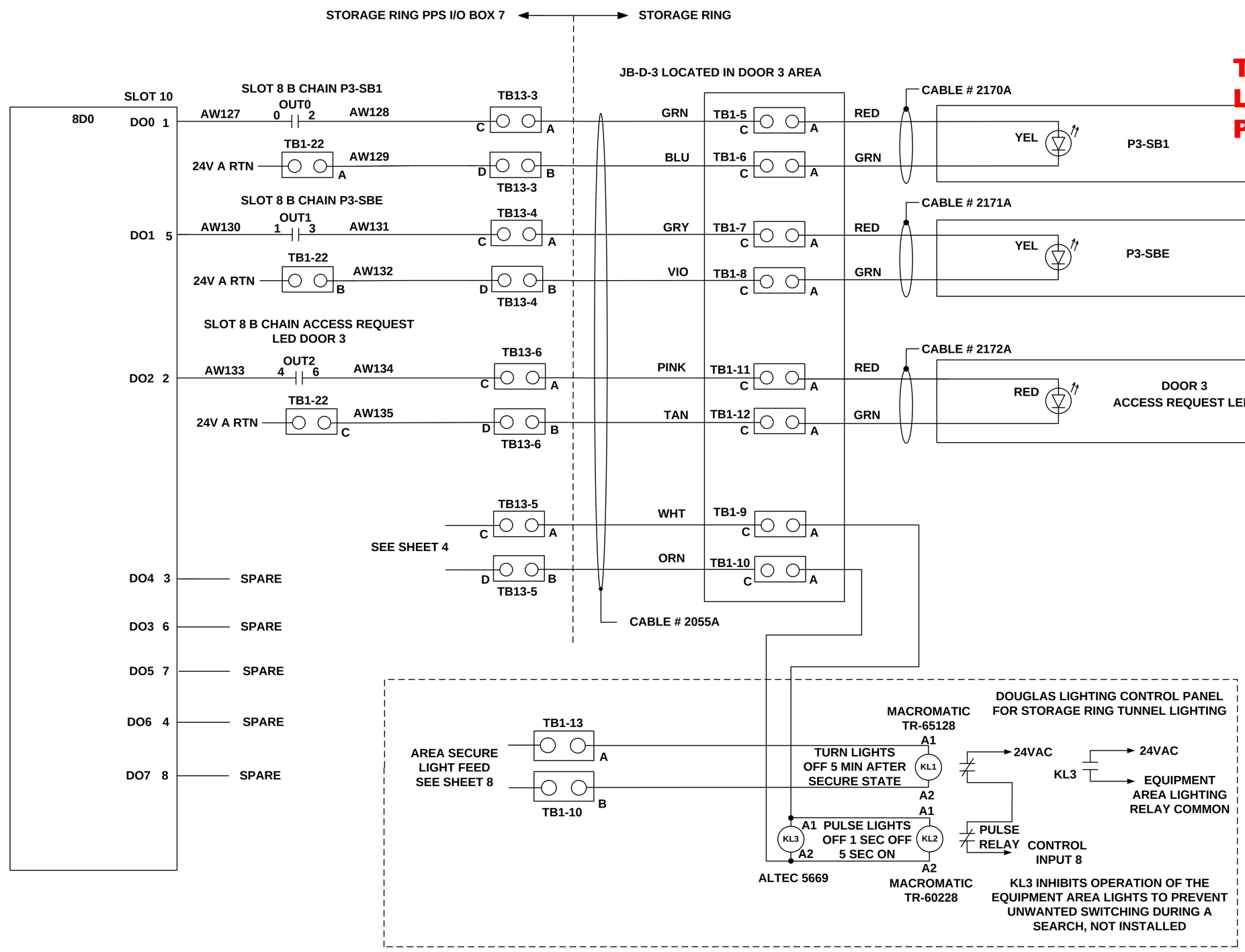

TO :
LT-ECN-017-1795
PAGE OF

GATE / LABYRINTH GROUP
DOOR 3

A

LT-EL-SR-EI (DRAWING DIRECTORY)	LT-EL-SR-EI-PPS-0207-90 (DRAWING NUMBER)	E (REV)
COMPUTER REPRODUCABLE	SCALE: N/A	SHEET 9 OF 61

LT-EL-SR-EI-PPS-0207-90

REV	DESCRIPTION	DATE	BY	CHECKED	APP
	SEE SHEET 1				

TO :
LT-ECN-017-1795
PAGE OF

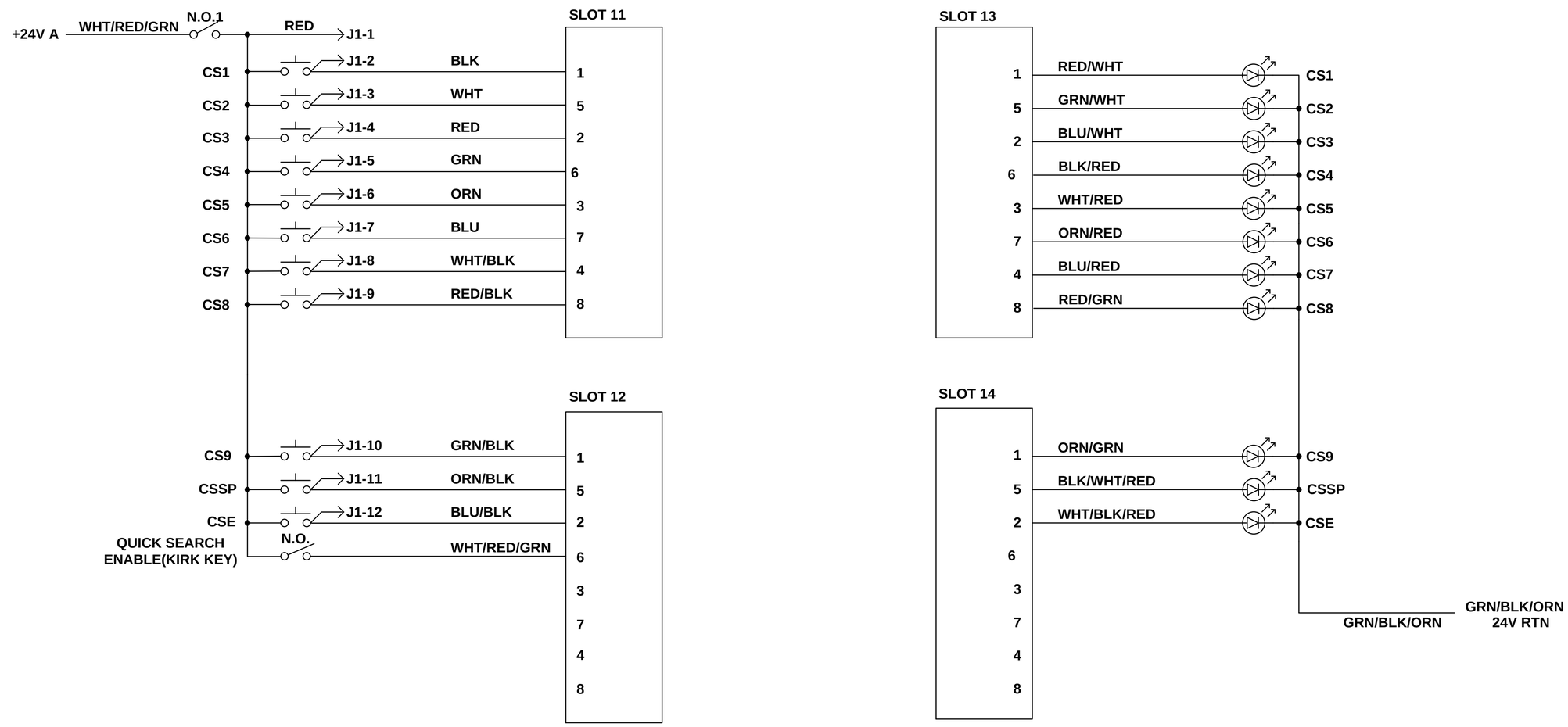

QUICK SEARCH
TEST BOX
COMMON GROUP

A

LT-EL-SR-EI DRAWING DIRECTORY	LT-EL-SR-EI-PPS-0207-90 DRAWING NUMBER	E REV
COMPUTER REPRODUCABLE	SCALE: N/A	SHEET 10 OF 61

LT-EL-SR-EI-PPS-0207-90

REV	DESCRIPTION	DATE	BY	CHECKED	APP
	SEE SHEET 1				

TO :
LT-ECN-017-1795
PAGE OF

SHEET LEFT BLANK
FOR FUTURE DATA

LT-EL-SR-EI-PPS-0207-90

LT-EL-SR-EI (DRAWING DIRECTORY)	LT-EL-SR-EI-PPS-0207-90 (DRAWING NUMBER)	E (REV)
COMPUTER REPRODUCABLE	SCALE: N/A	SHEET 11 OF 61

REV	DESCRIPTION	DATE	BY	CHECKED	APP
	SEE SHEET 1				

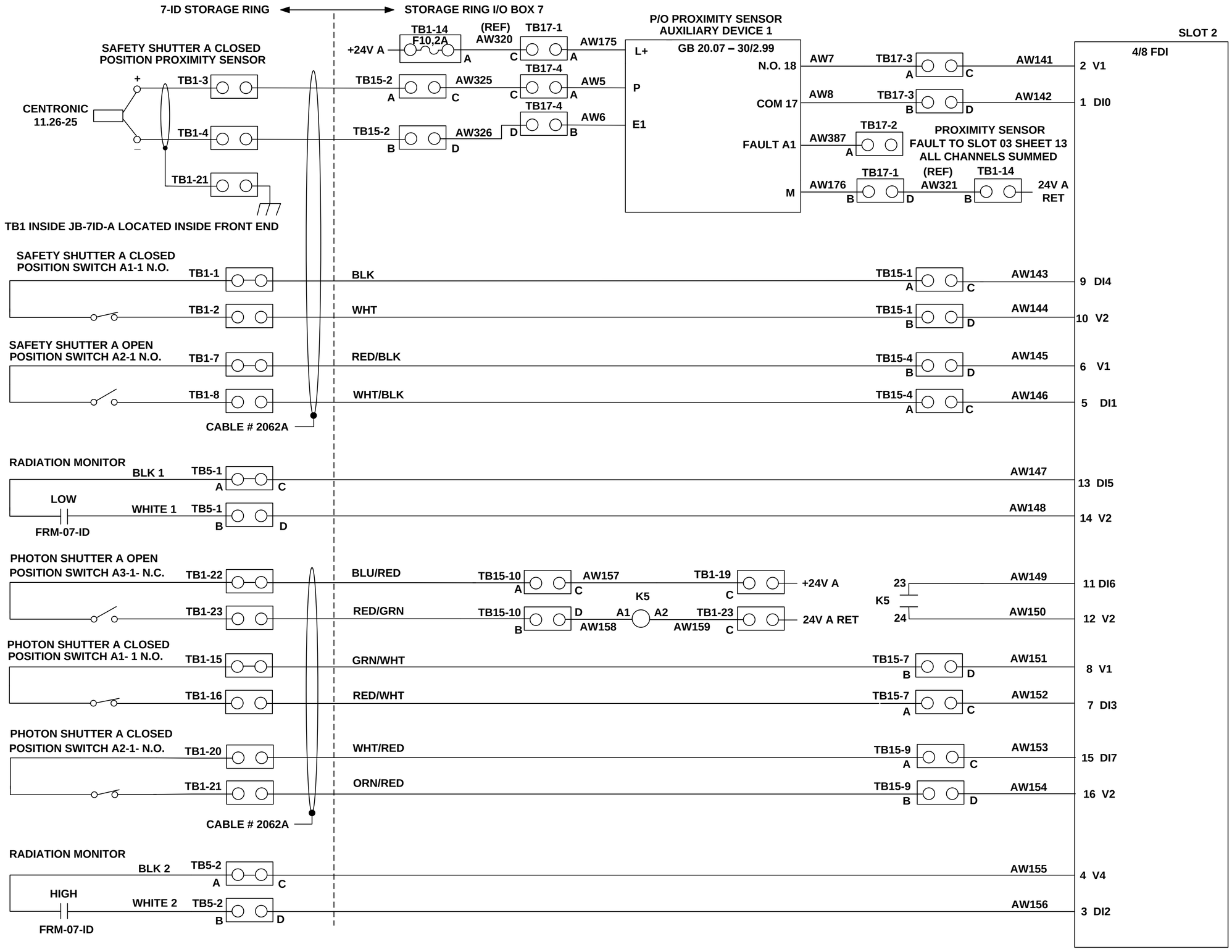

TO :
LT-ECN-017-1795
PAGE OF

ID BEAMLINE GROUP
7-ID
A

LT-EL-SR-EI-PPS-0207-90

LT-EL-SR-EI (DRAWING DIRECTORY)	LT-EL-SR-EI-PPS-0207-90 (DRAWING NUMBER)	E (REV)
COMPUTER REPRODUCABLE	SCALE: N/A	SHEET 12 OF 61

REV	DESCRIPTION	DATE	BY	CHECKED	APP
	SEE SHEET 1				

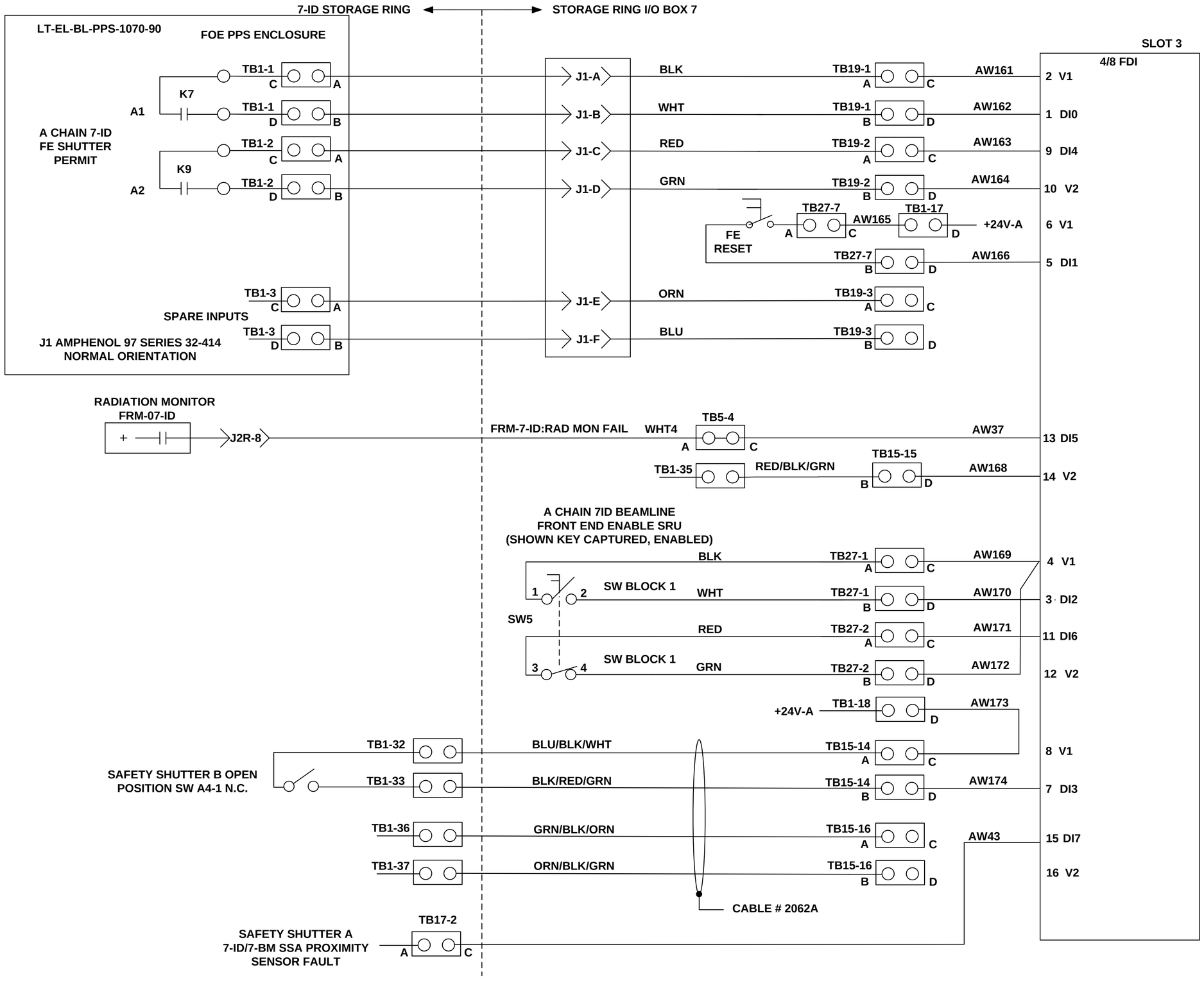

TO :
LT-ECN-017-1795
PAGE OF

ID BEAMLINE GROUP
7-ID
A

LT-EL-SR-EI-PPS-0207-90

LT-EL-SR-EI (DRAWING DIRECTORY)	LT-EL-SR-EI-PPS-0207-90 (DRAWING NUMBER)	E (REV)
COMPUTER REPRODUCABLE	SCALE: N/A	SHEET 13 OF 61

REV	DESCRIPTION	DATE	BY	CHECKED	APP
	SEE SHEET 1				

TO :
LT-ECN-017-1795
PAGE OF

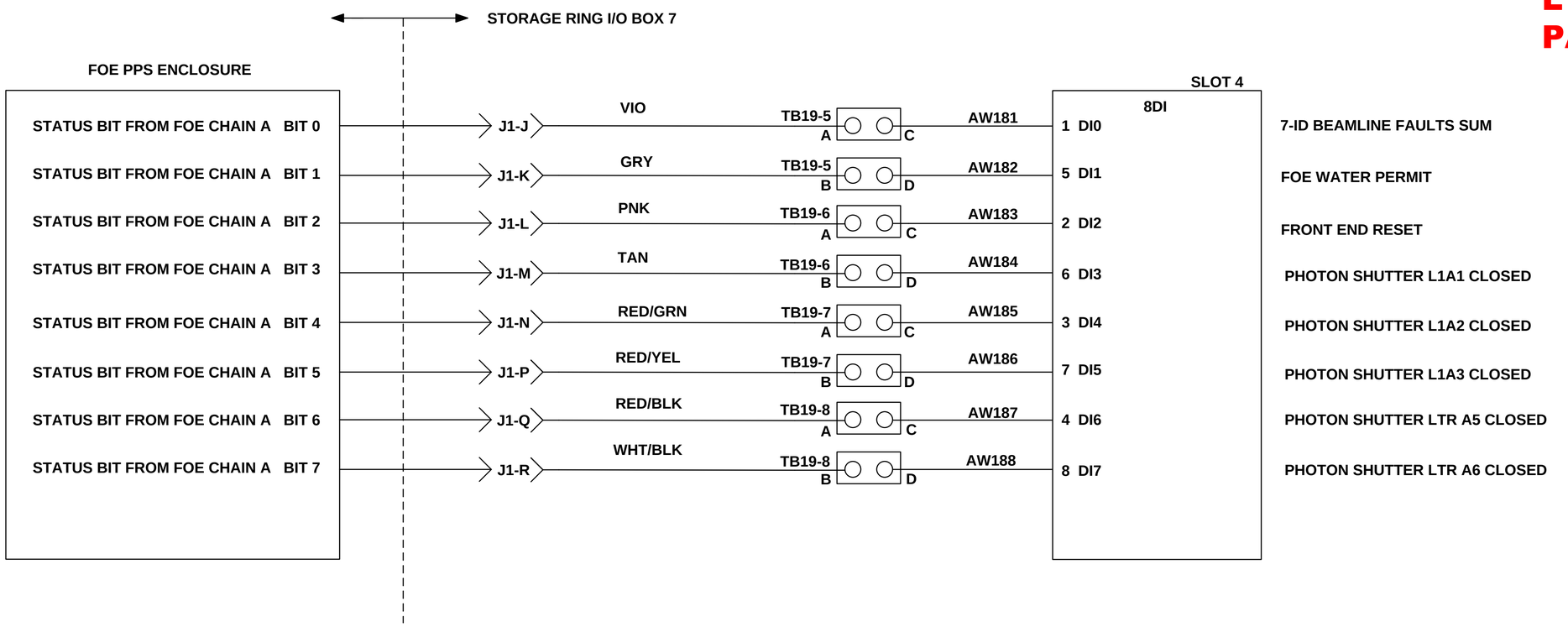

ID BEAMLINE GROUP

7-ID

A

LT-EL-SR-EI (DRAWING DIRECTORY)	LT-EL-SR-EI-PPS-0207-90 (DRAWING NUMBER)	E (REV)
COMPUTER REPRODUCABLE	SCALE: N/A	SHEET 14 OF 61

LT-EL-SR-EI-PPS-0207-90

REV	DESCRIPTION	DATE	BY	CHECKED	APP
	SEE SHEET 1				

TO :
LT-ECN-017-1795
PAGE OF

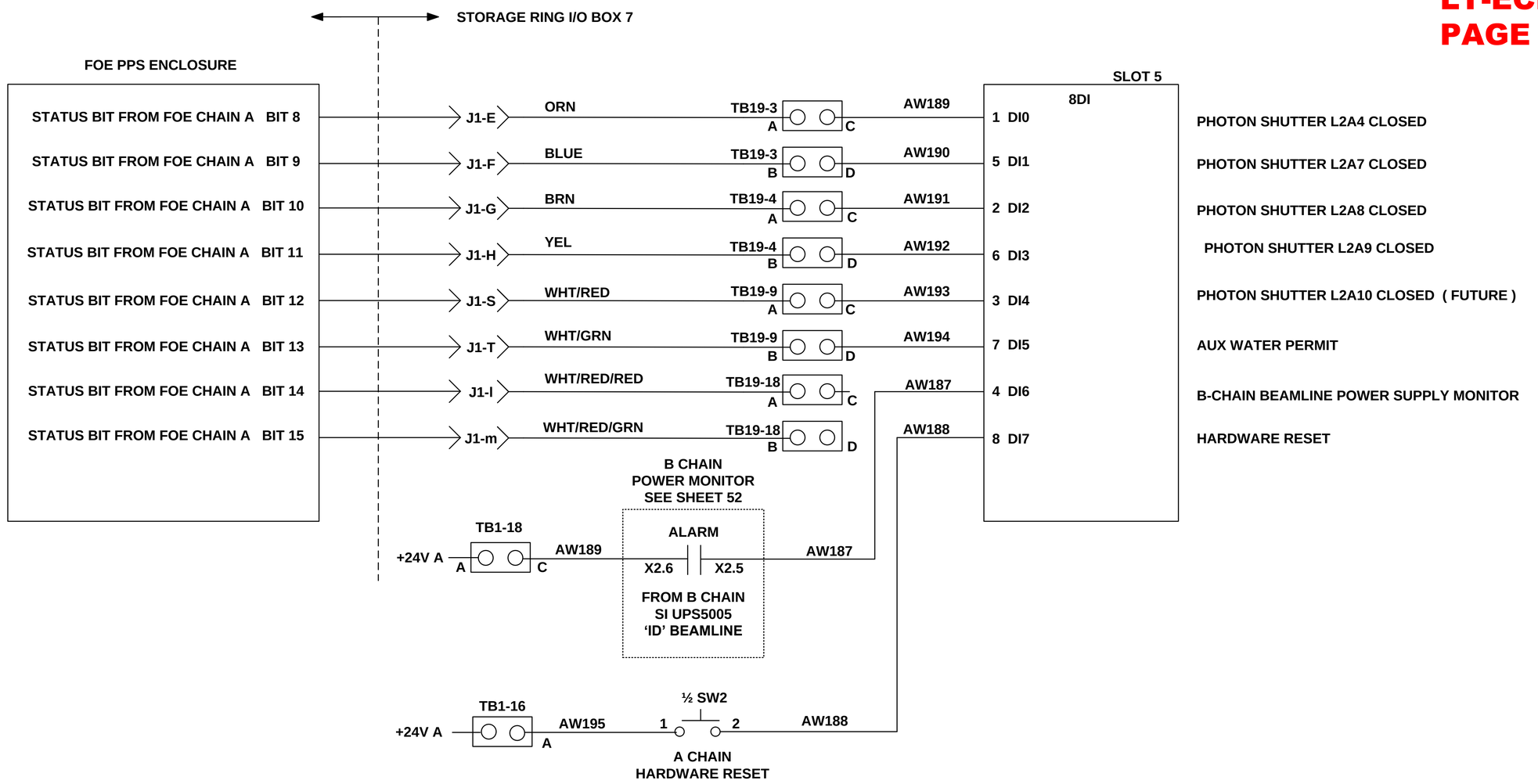

ID BEAMLINE GROUP
7-ID
A

LT-EL-SR-EI (DRAWING DIRECTORY)	LT-EL-SR-EI-PPS-0207-90 (DRAWING NUMBER)	E (REV)
COMPUTER REPRODUCABLE	SCALE: N/A	SHEET 15 OF 61

LT-EL-SR-EI-PPS-0207-90

REV	DESCRIPTION	DATE	BY	CHECKED	APP
	SEE SHEET 1				

TO :
LT-ECN-017-1795
PAGE OF

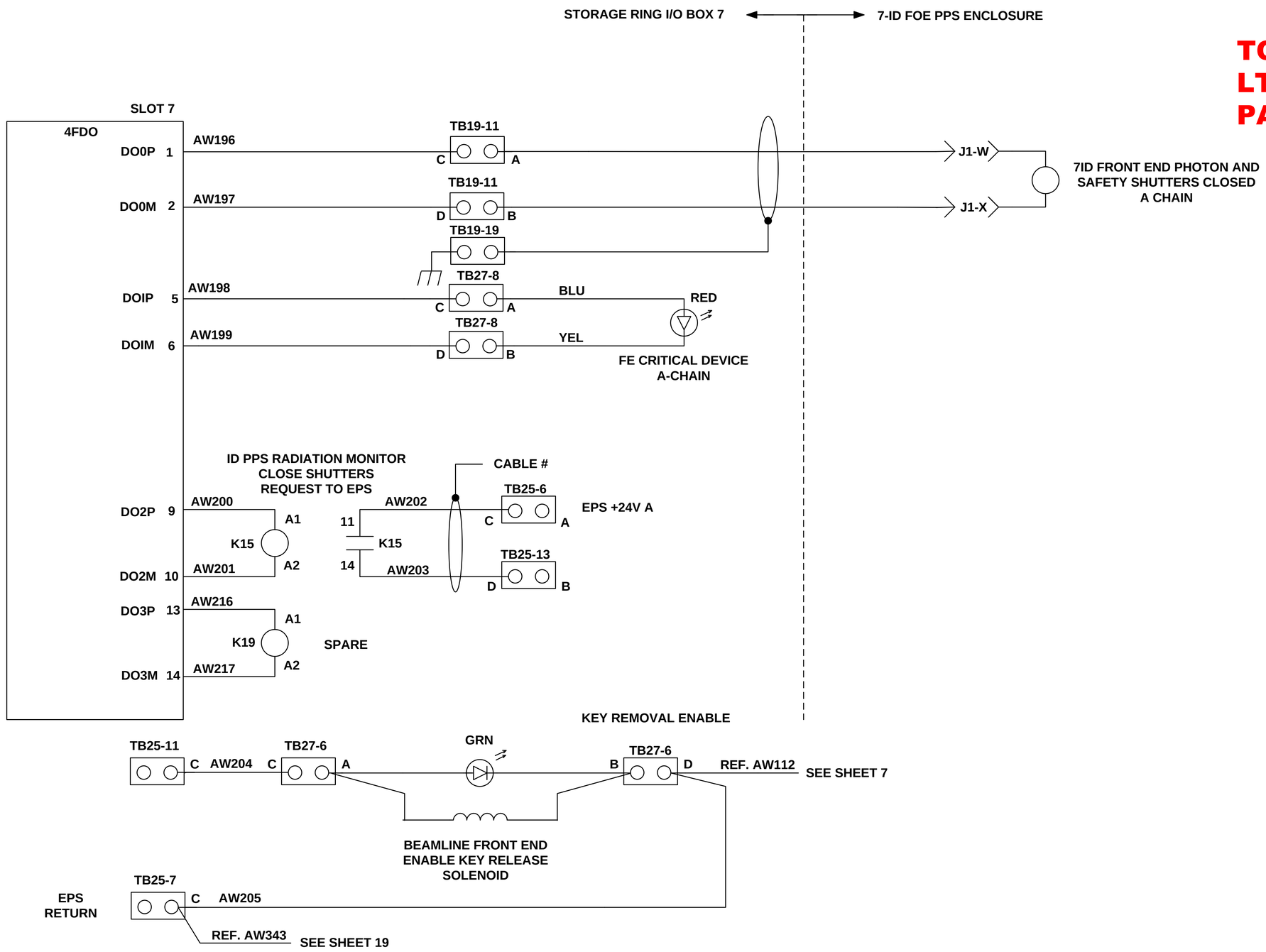

ID BEAMLINE GROUP

7-ID

A

LT-EL-SR-EI (DRAWING DIRECTORY)	LT-EL-SR-EI-PPS-0207-90 (DRAWING NUMBER)	E (REV)
COMPUTER REPRODUCABLE	SCALE: N/A	SHEET 16 OF 61

LT-EL-SR-EI-PPS-0207-90

REV	DESCRIPTION	DATE	BY	CHECKED	APP
	SEE SHEET 1				

TO :
LT-ECN-017-1795
PAGE OF

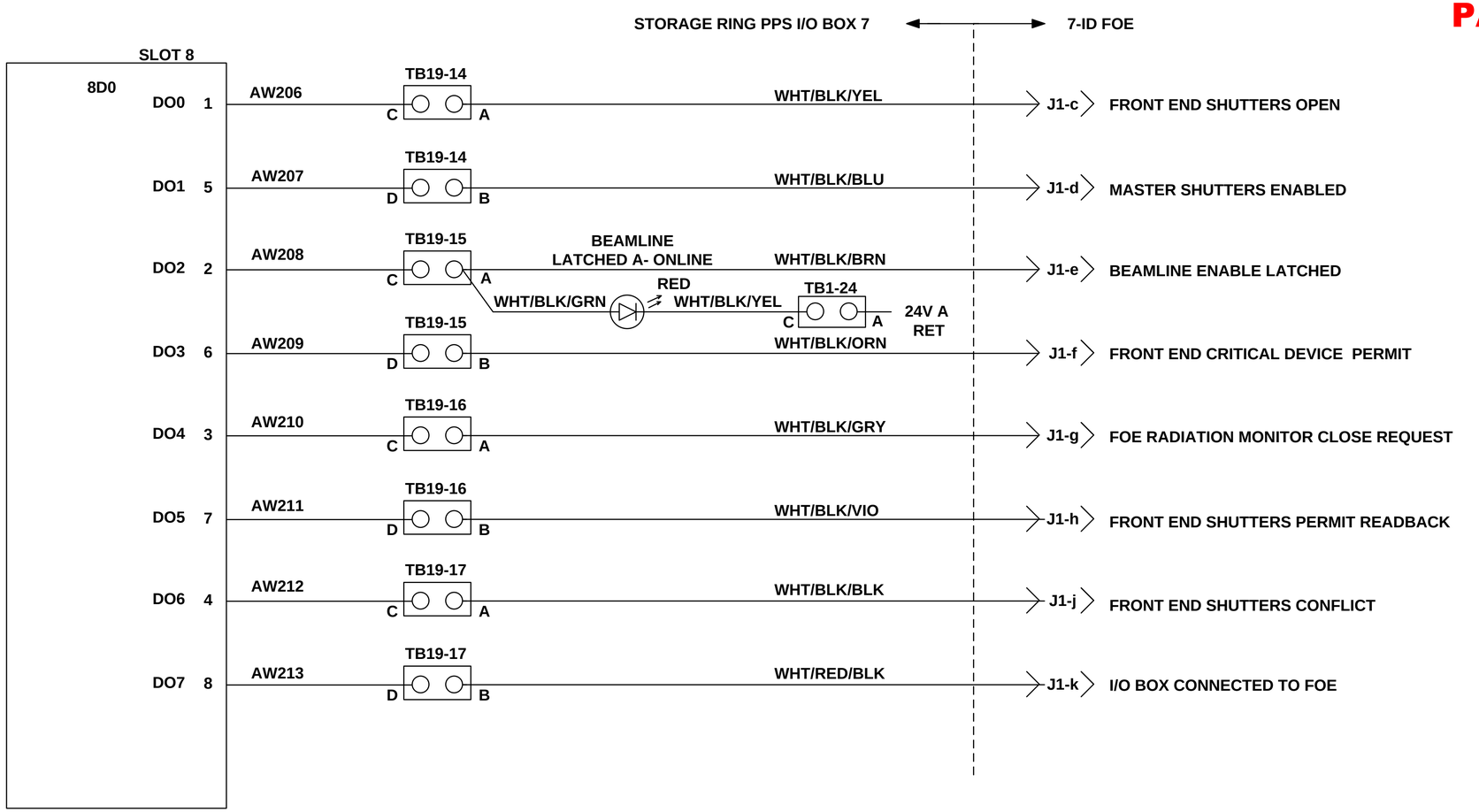

ID BEAMLINE GROUP

7-ID

A

LT-EL-SR-EI (DRAWING DIRECTORY)	LT-EL-SR-EI-PPS-0207-90 (DRAWING NUMBER)	E (REV)
COMPUTER REPRODUCABLE	SCALE: N/A	SHEET 17 OF 61

LT-EL-SR-EI-PPS-0207-90

REV	DESCRIPTION	DATE	BY	CHECKED	APP
	SEE SHEET 1				

TO :
LT-ECN-017-1795
PAGE OF

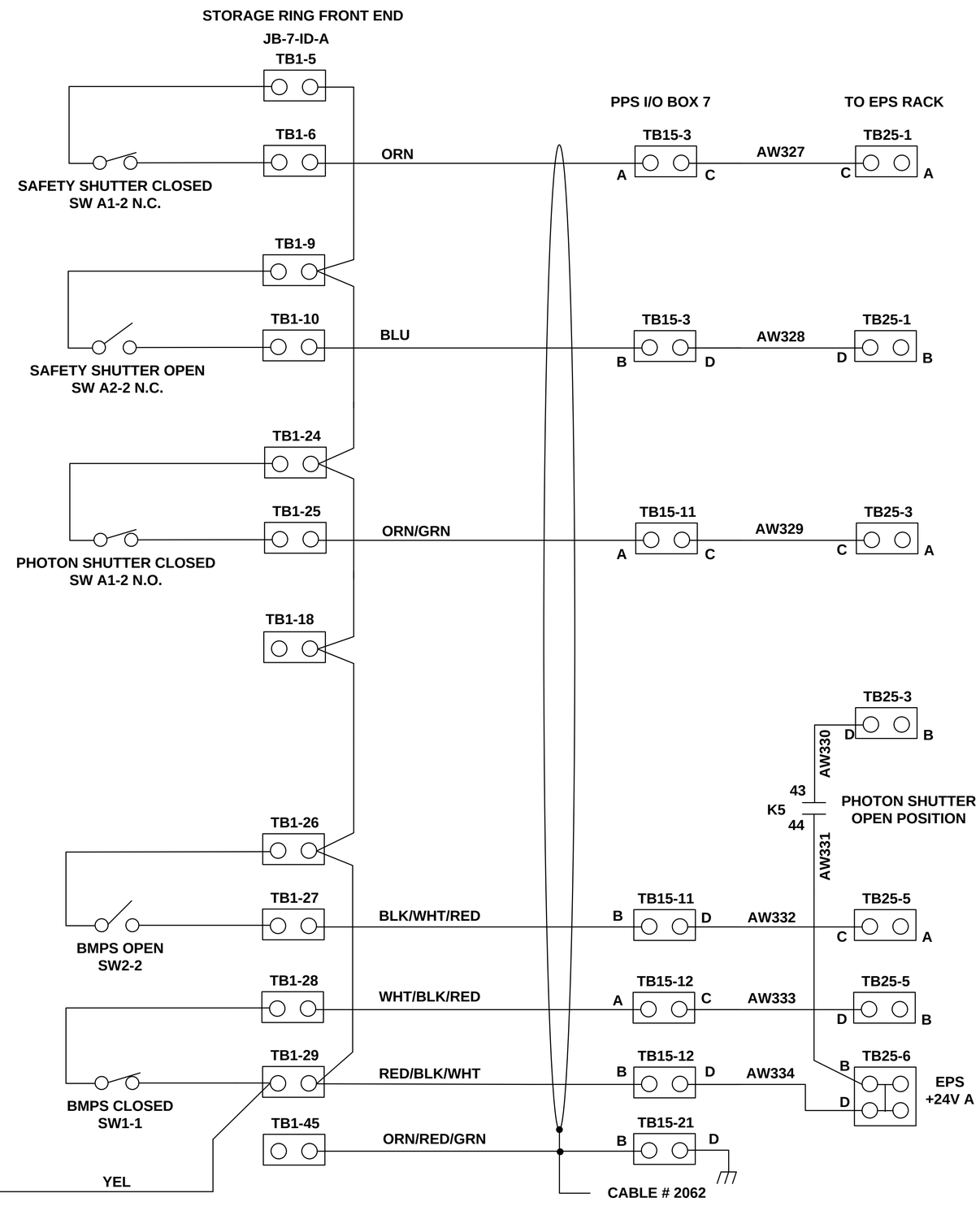

ID BEAMLINE GROUP

7-ID

A

LT-EL-SR-EI (DRAWING DIRECTORY)	LT-EL-SR-EI-PPS-0207-90 (DRAWING NUMBER)	E (REV)
COMPUTER REPRODUCABLE	SCALE: N/A	SHEET 18 OF 61

LT-EL-SR-EI-PPS-0207-90

REV	DESCRIPTION	DATE	BY	CHECKED	APP
	SEE SHEET 1				

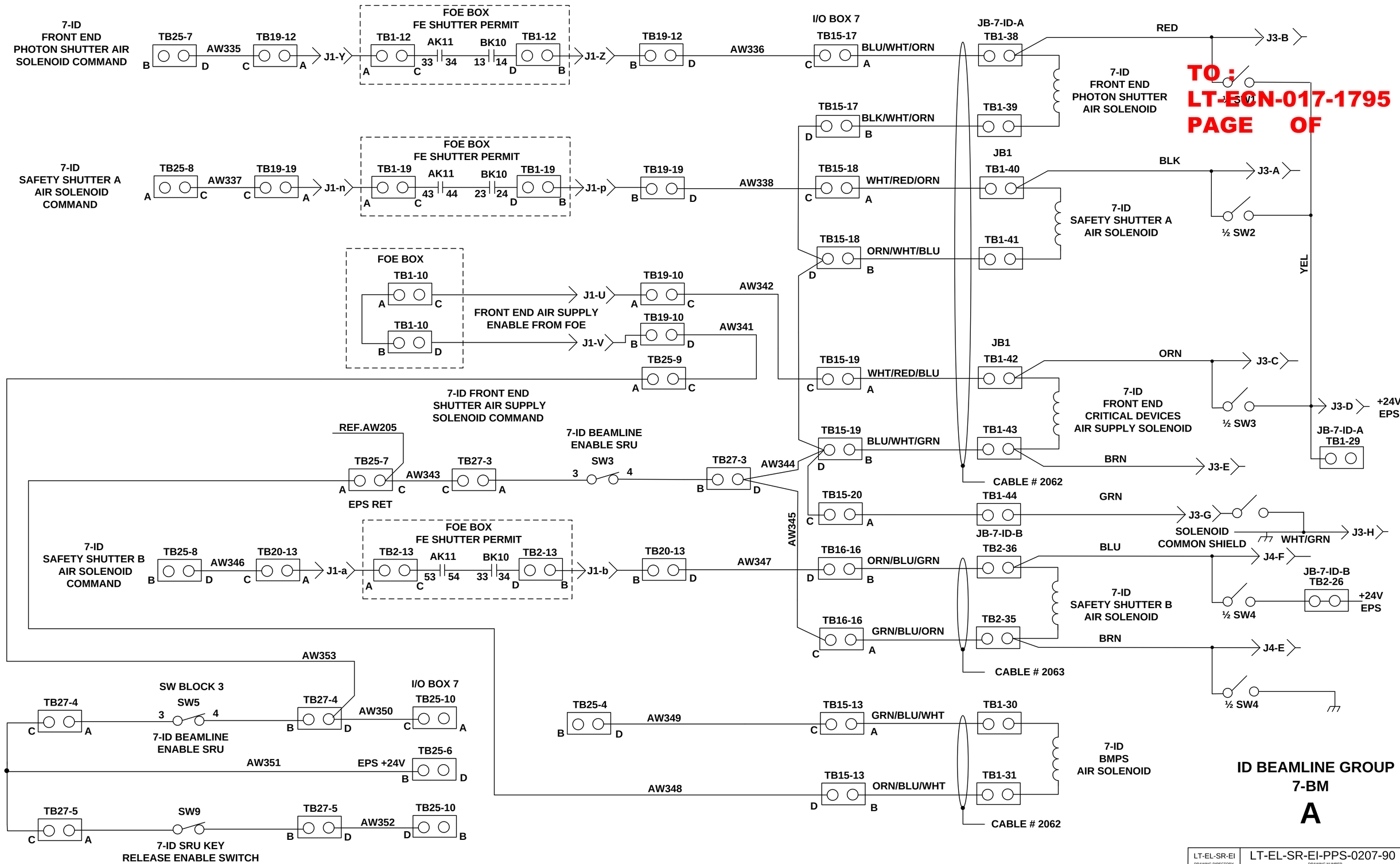

TO : LT-ECN-017-1795
PAGE OF

LT-EL-SR-EI (DRAWING DIRECTORY)	LT-EL-SR-EI-PPS-0207-90 (DRAWING NUMBER)	E (REV)
COMPUTER REPRODUCABLE	SCALE: N/A	SHEET 19 OF 61

LT-EL-SR-EI-PPS-0207-90

REV	DESCRIPTION	DATE	BY	CHECKED	APP
	SEE SHEET 1				

TO :
LT-ECN-017-1795
PAGE OF

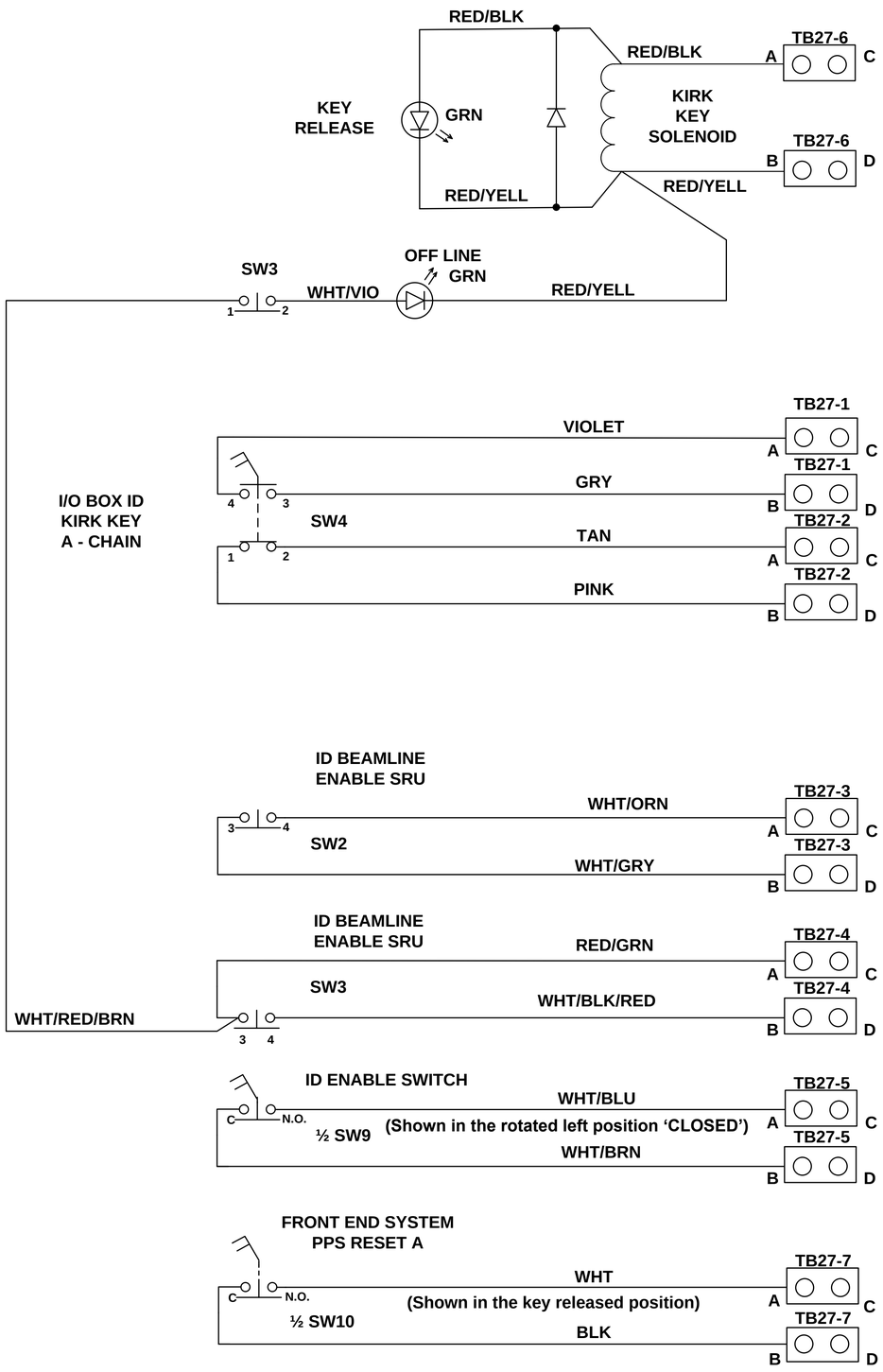

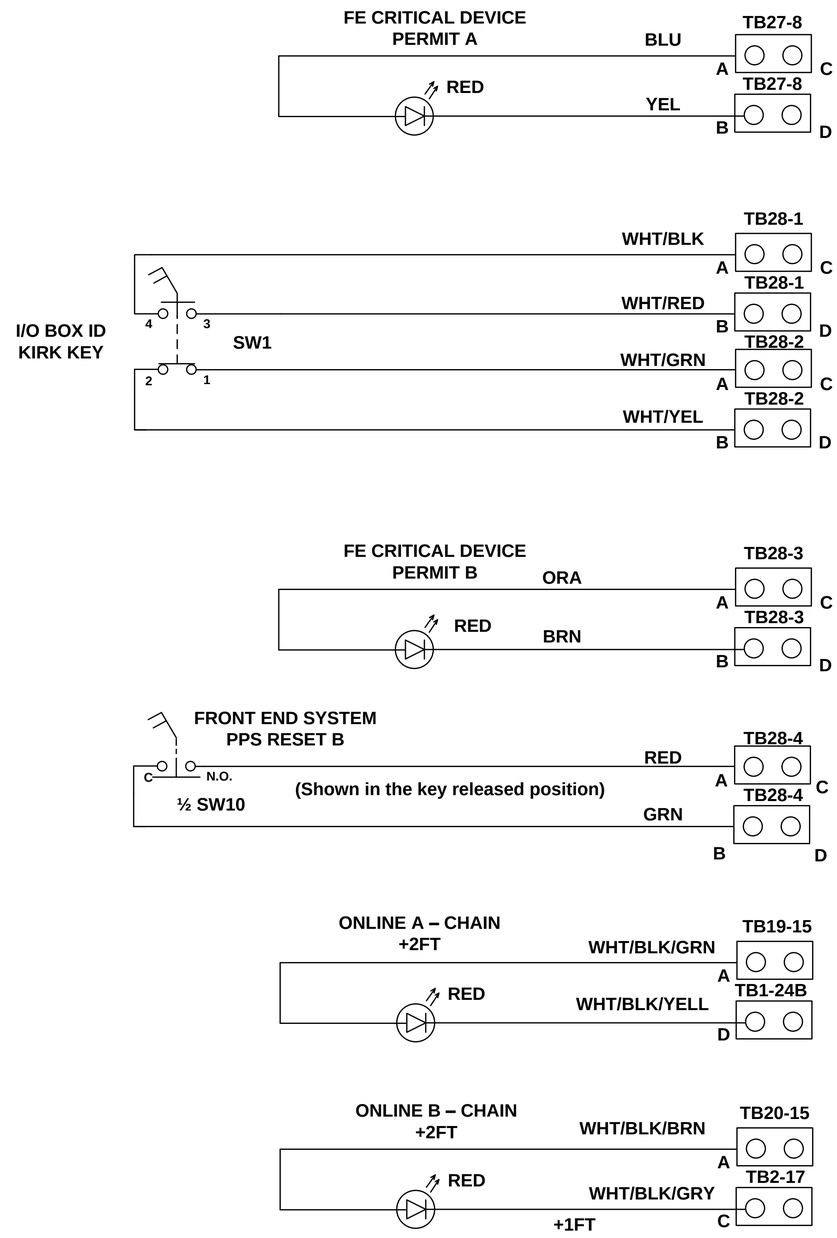

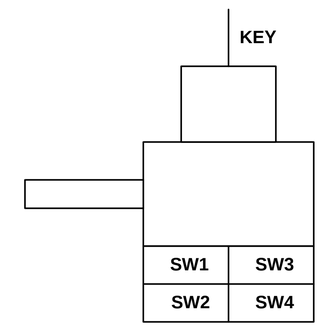

KIRK KEY
SRU UNIT

PIGTAIL
TB 27 A- CHAIN 46" LONG
TB28 B – CHAIN 36" LONG

ID ½ BEAMLINE ENABLE PANEL

LT-EL-SR-EI-PPS-0207-90

LT-EL-SR-EI (DRAWING DIRECTORY)	LT-EL-SR-EI-PPS-0207-90 (DRAWING NUMBER)	E (REV)
COMPUTER REPRODUCABLE	SCALE: N/A	SHEET 20 OF 61

REV	DESCRIPTION	DATE	BY	CHECKED	APP
	SEE SHEET 1				

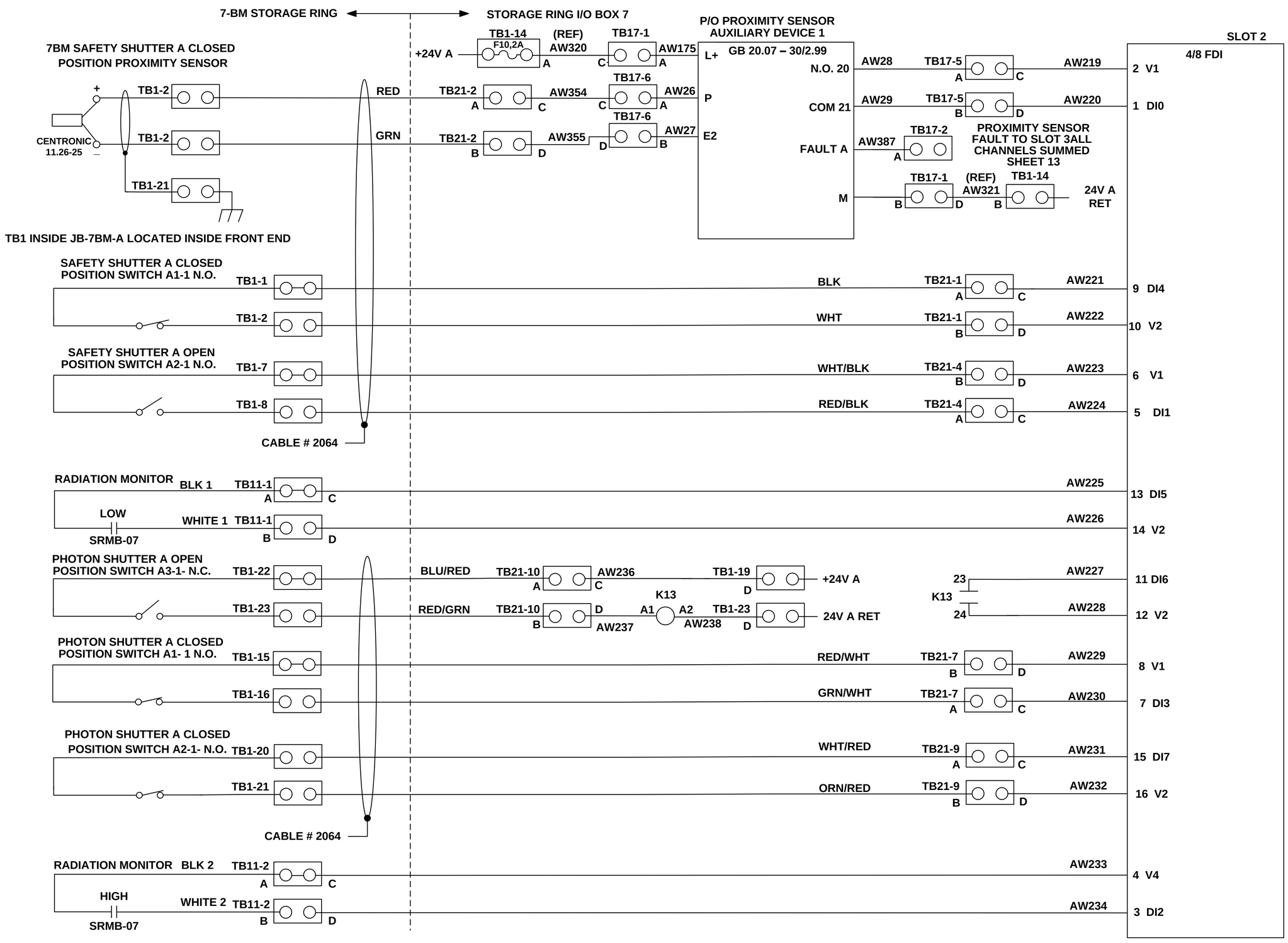

TO :
LT-ECN-017-1795
PAGE OF

BM BEAMLINE GROUP
7-BM
A

LT-EL-SR-EI-PPS-0207-90

LT-EL-SR-EI (DRAWING DIRECTORY)	LT-EL-SR-EI-PPS-0207-90 (DRAWING NUMBER)	E (REV)
COMPUTER REPRODUCABLE	SCALE: N/A	SHEET 21 OF 61

REV	DESCRIPTION	DATE	BY	CHECKED	APP
	SEE SHEET 1				

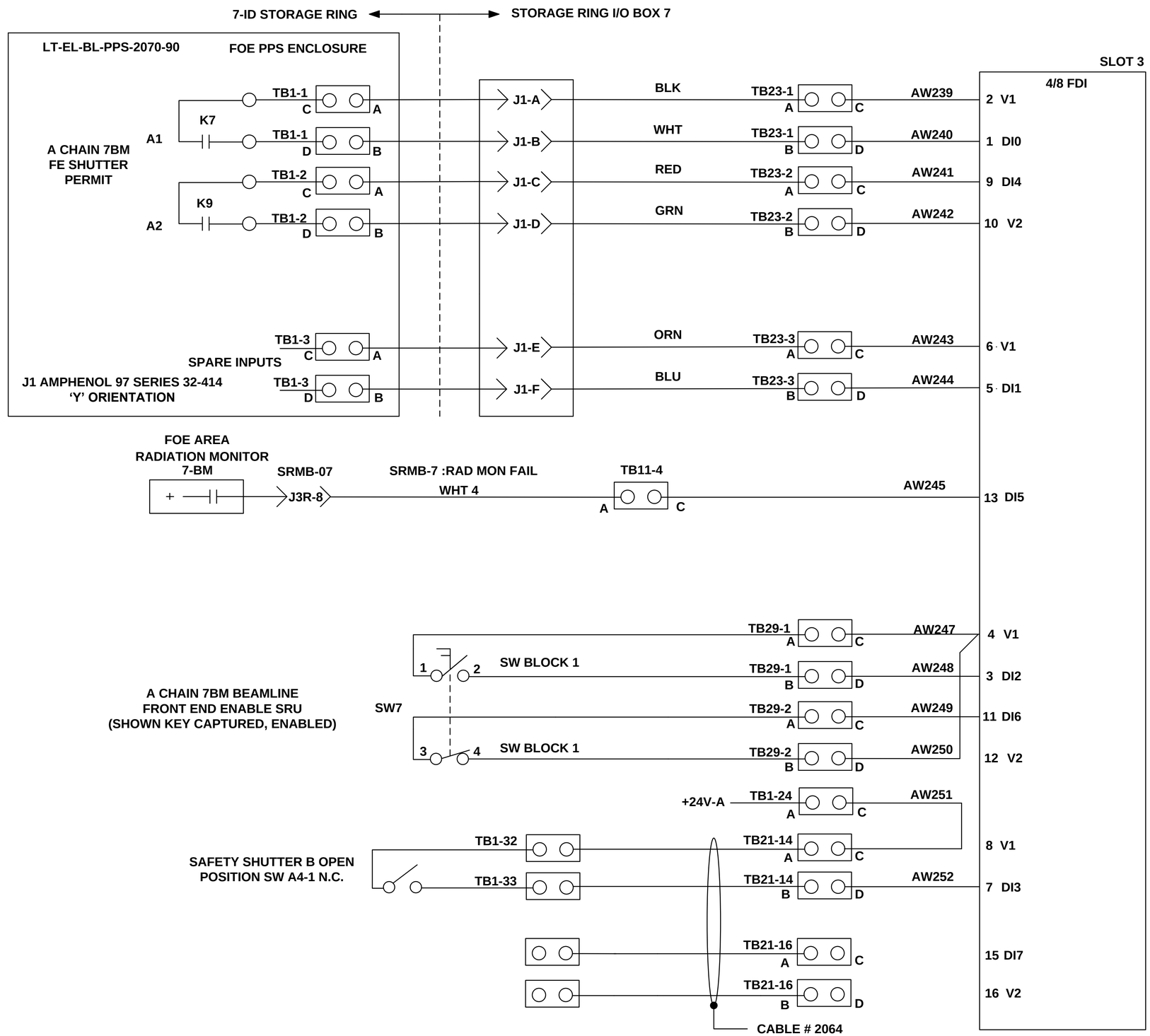

TO :
LT-ECN-017-1795
PAGE OF

BM BEAMLINE GROUP

7-BM

A

LT-EL-SR-EI (DRAWING DIRECTORY)	LT-EL-SR-EI-PPS-0207-90 (DRAWING NUMBER)	E (REV)
COMPUTER REPRODUCABLE	SCALE: N/A	SHEET 22 OF 61

LT-EL-SR-EI-PPS-0207-90

REV	DESCRIPTION	DATE	BY	CHECKED	APP
	SEE SHEET 1				

TO :
LT-ECN-017-1795
PAGE OF

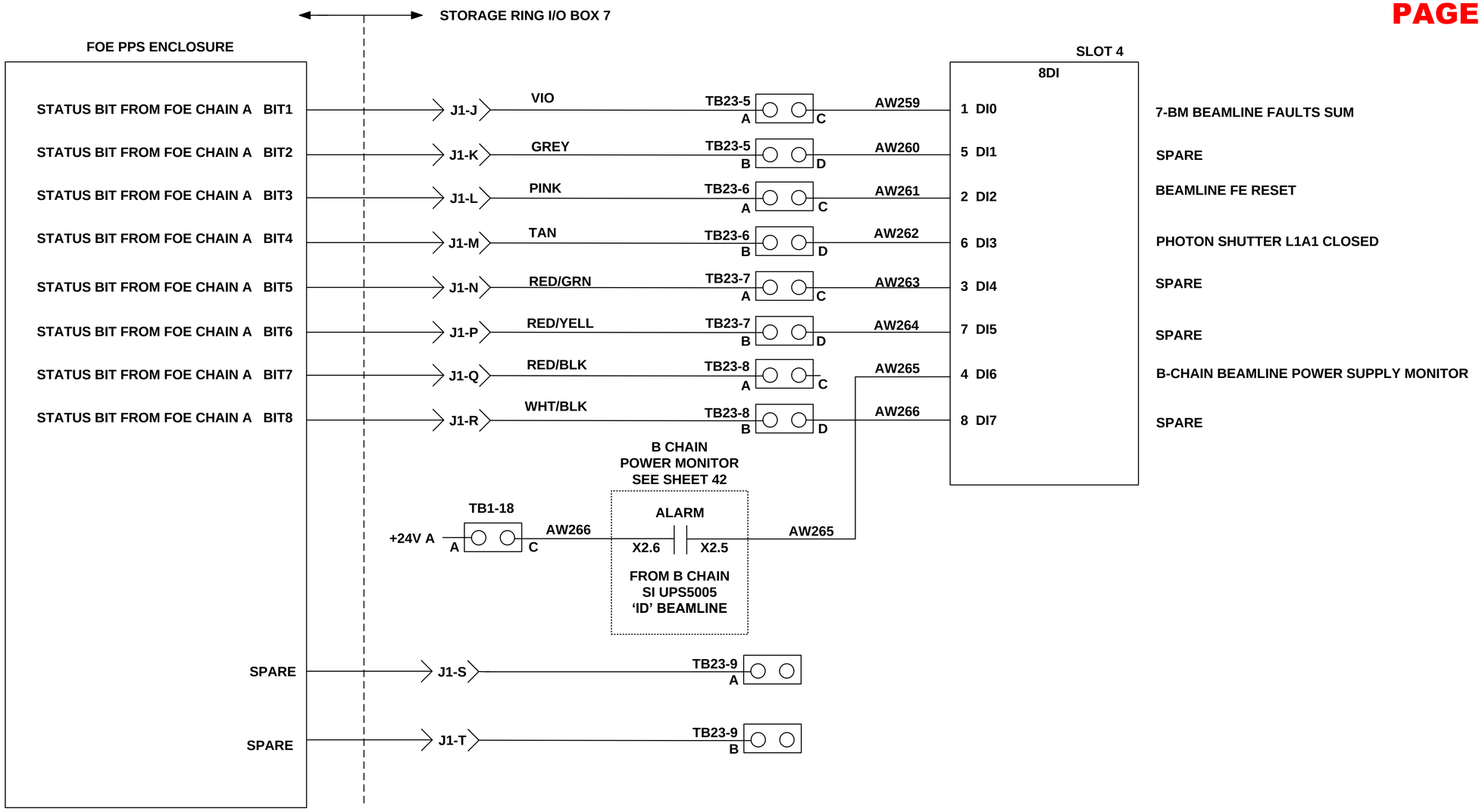

BM BEAMLINE GROUP

7-BM

A

LT-EL-SR-EI DRAWING DIRECTORY	LT-EL-SR-EI-PPS-0207-90 DRAWING NUMBER	E REV
COMPUTER REPRODUCABLE	SCALE: N/A	SHEET 23 OF 61

LT-EL-SR-EI-PPS-0207-90

REV	DESCRIPTION	DATE	BY	CHECKED	APP
	SEE SHEET 1				

TO :
LT-ECN-017-1795
PAGE OF

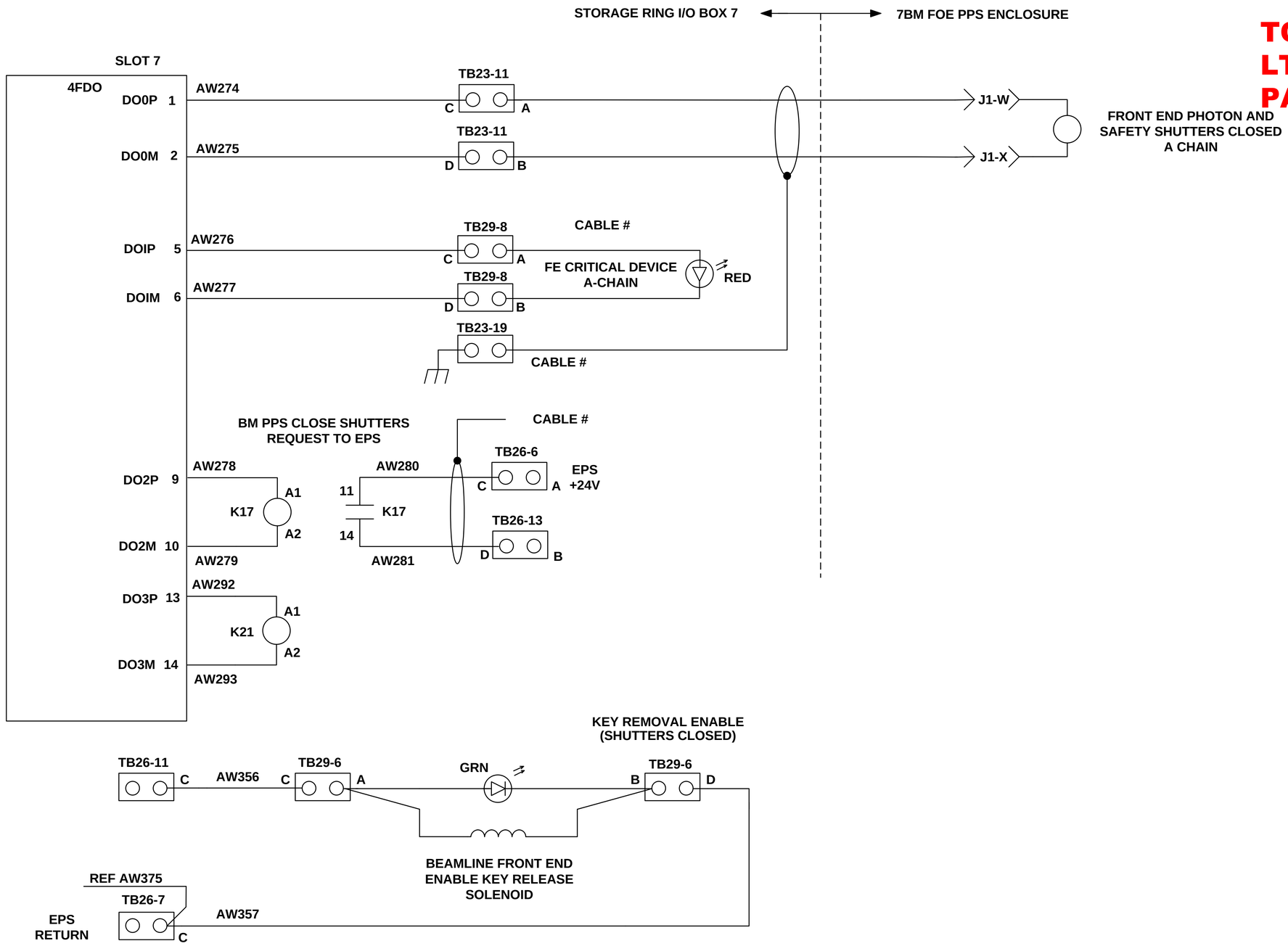

BM BEAMLINE GROUP
7-BM
A

LT-EL-SR-EI-PPS-0207-90

LT-EL-SR-EI (DRAWING DIRECTORY)	LT-EL-SR-EI-PPS-0207-90 (DRAWING NUMBER)	E (REV)
COMPUTER REPRODUCABLE	SCALE: N/A	SHEET 24 OF 61

REV	DESCRIPTION	DATE	BY	CHECKED	APP
	SEE SHEET 1				

TO :
LT-ECN-017-1795
PAGE OF

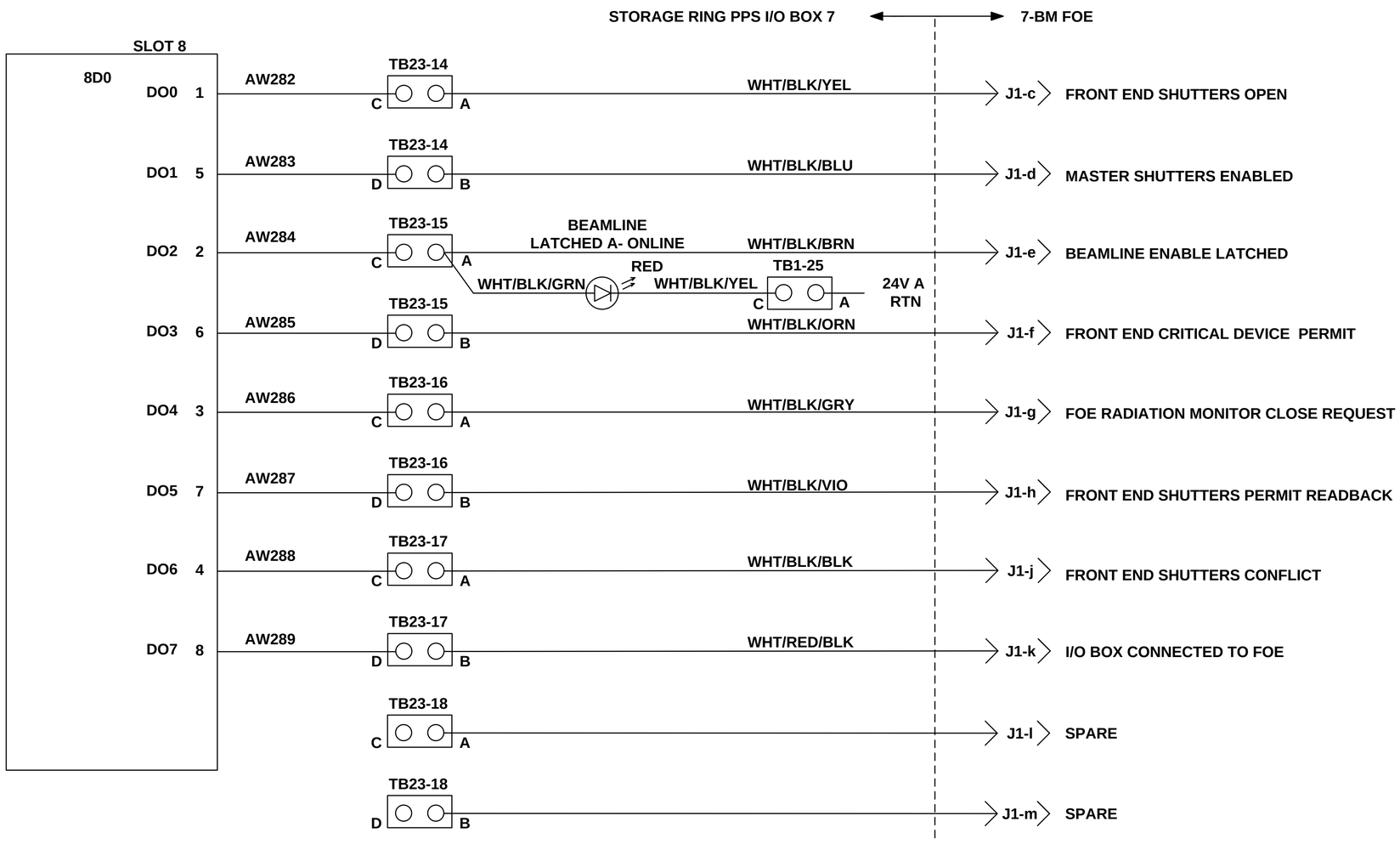

BM BEAMLINE GROUP
7-BM
A

LT-EL-SR-EI (DRAWING DIRECTORY)	LT-EL-SR-EI-PPS-0207-90 (DRAWING NUMBER)	E (REV)
COMPUTER REPRODUCABLE	SCALE: N/A	SHEET 25 OF 61

LT-EL-SR-EI-PPS-0207-90

REV	DESCRIPTION	DATE	BY	CHECKED	APP
	SEE SHEET 1				

TO :
LT-ECN-017-1795
PAGE OF

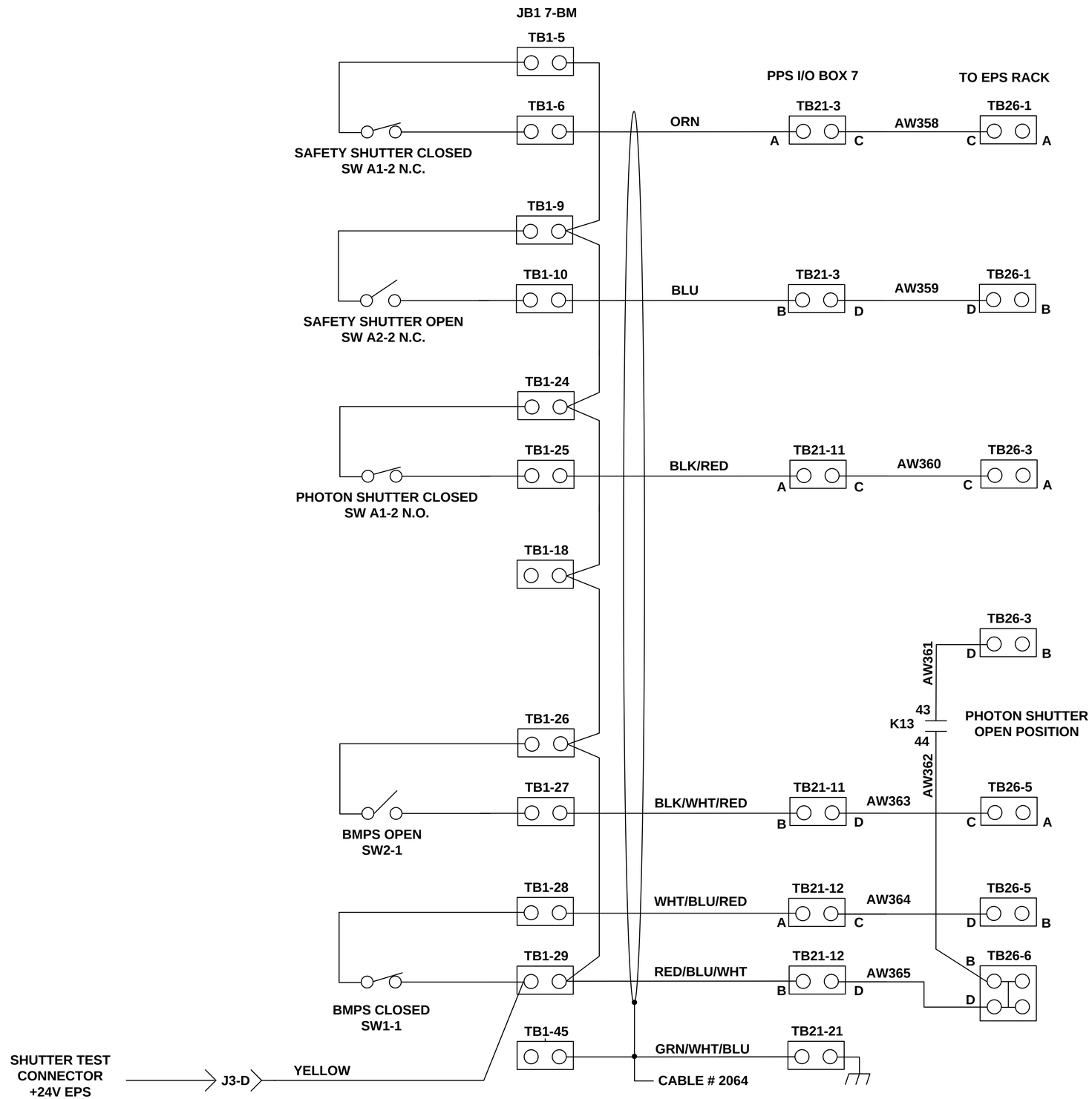

BM BEAMLINE GROUP

7-BM

A

LT-EL-SR-EI (DRAWING DIRECTORY)	LT-EL-SR-EI-PPS-0207-90 (DRAWING NUMBER)	E (REV)
COMPUTER REPRODUCABLE	SCALE: N/A	SHEET 26 OF 61

LT-EL-SR-EI-PPS-0207-90

REV	DESCRIPTION	DATE	BY	CHECKED	APP
	SEE SHEET 1				

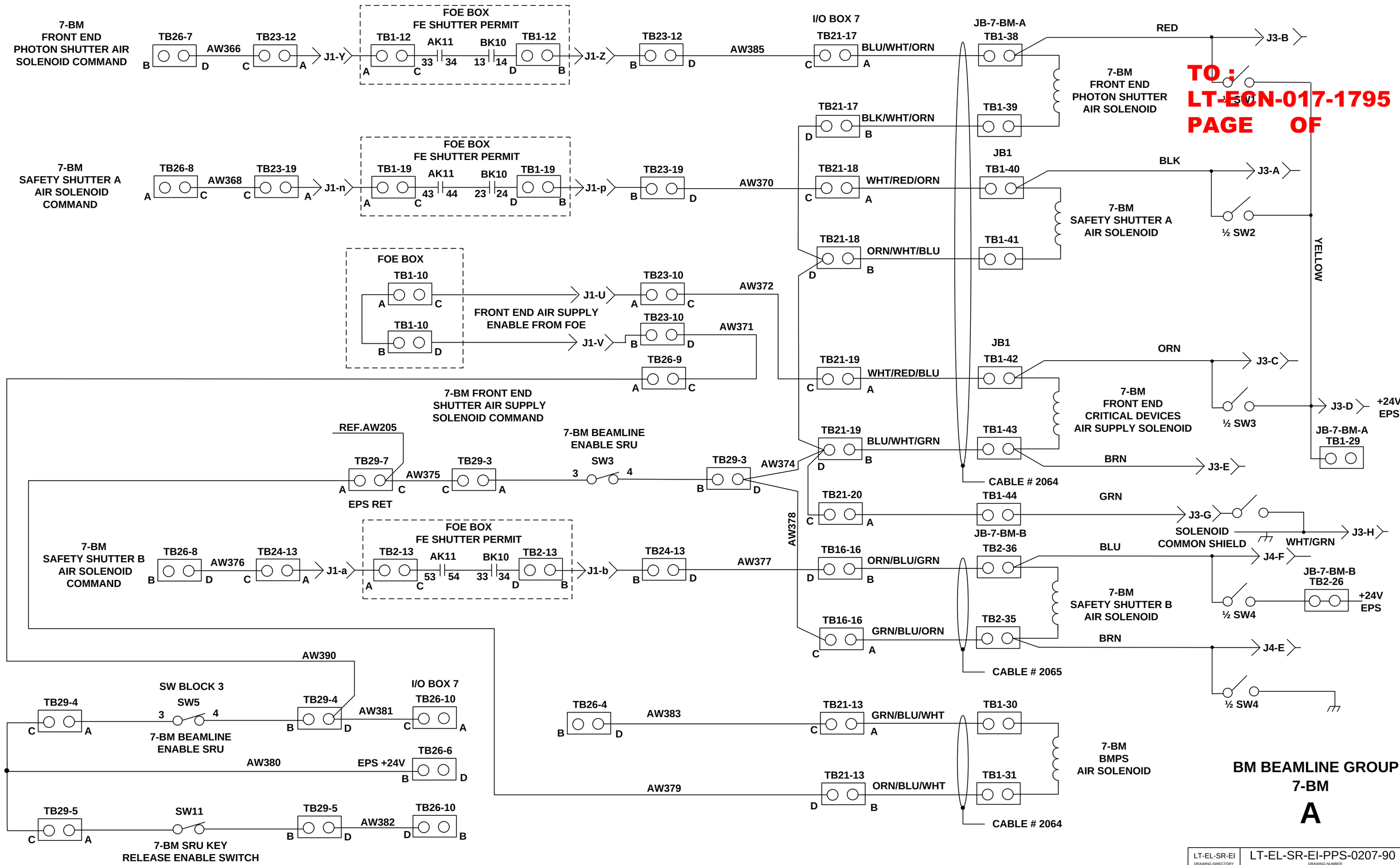

TO : LT-ECN-017-1795
PAGE OF

LT-EL-SR-EI-PPS-0207-90

LT-EL-SR-EI (DRAWING DIRECTORY)	LT-EL-SR-EI-PPS-0207-90 (DRAWING NUMBER)	E (REV)
COMPUTER REPRODUCABLE	SCALE: N/A	SHEET 27 OF 61

REV	DESCRIPTION	DATE	BY	CHECKED	APP
	SEE SHEET 1				

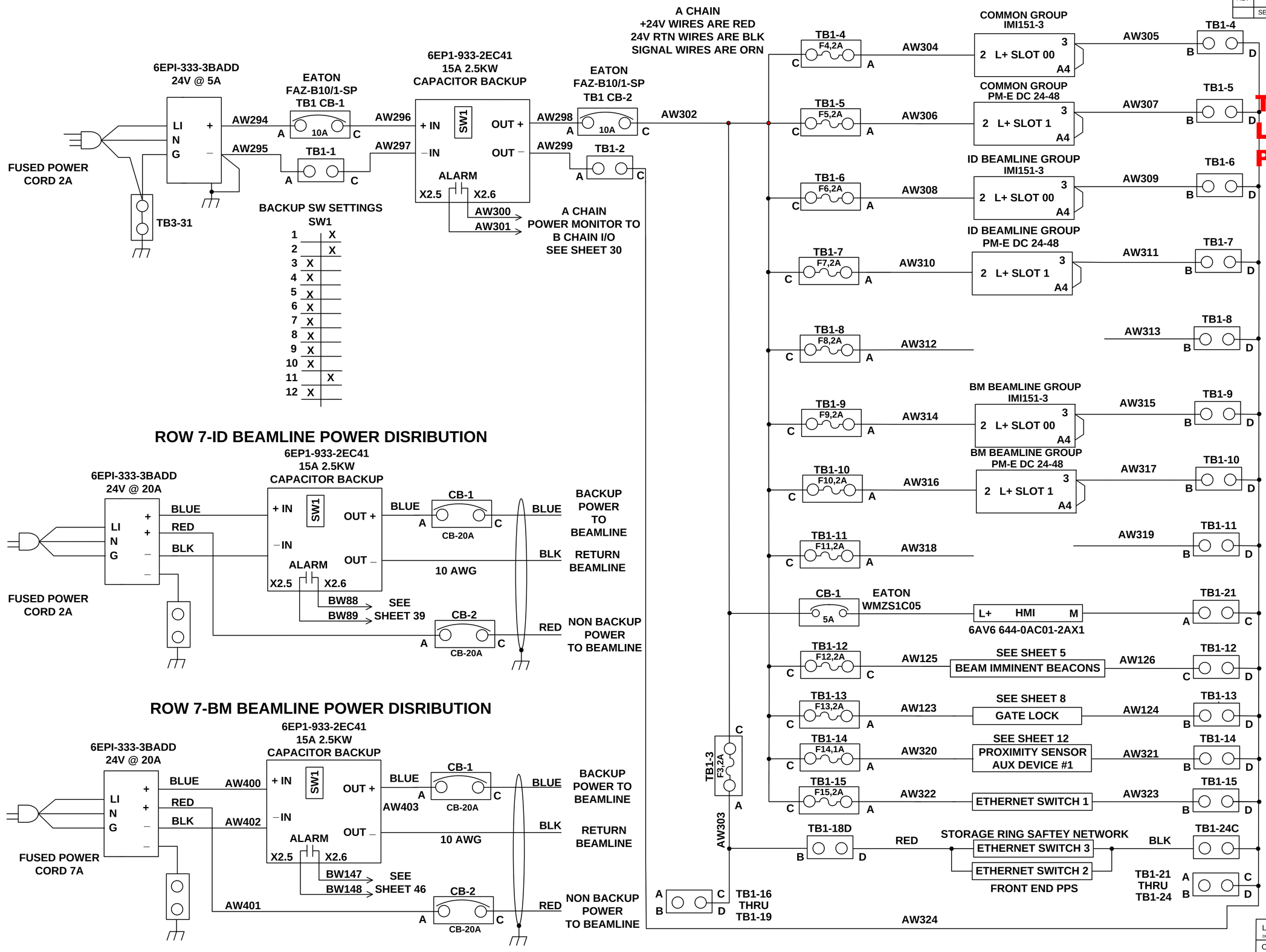

TO :
LT-ECN-017-1795
PAGE OF

POWER DISTRIBUTION

7-BM

A

LT-EL-SR-EI-PPS-0207-90

LT-EL-SR-EI (DRAWING DIRECTORY)	LT-EL-SR-EI-PPS-0207-90 (DRAWING NUMBER)	E (REV)
COMPUTER REPRODUCABLE	SCALE: N/A	SHEET 29 OF 61

REV	DESCRIPTION	DATE	BY	CHECKED	APP
	SEE SHEET 1				

TO :
LT-ECN-017-1795
PAGE OF

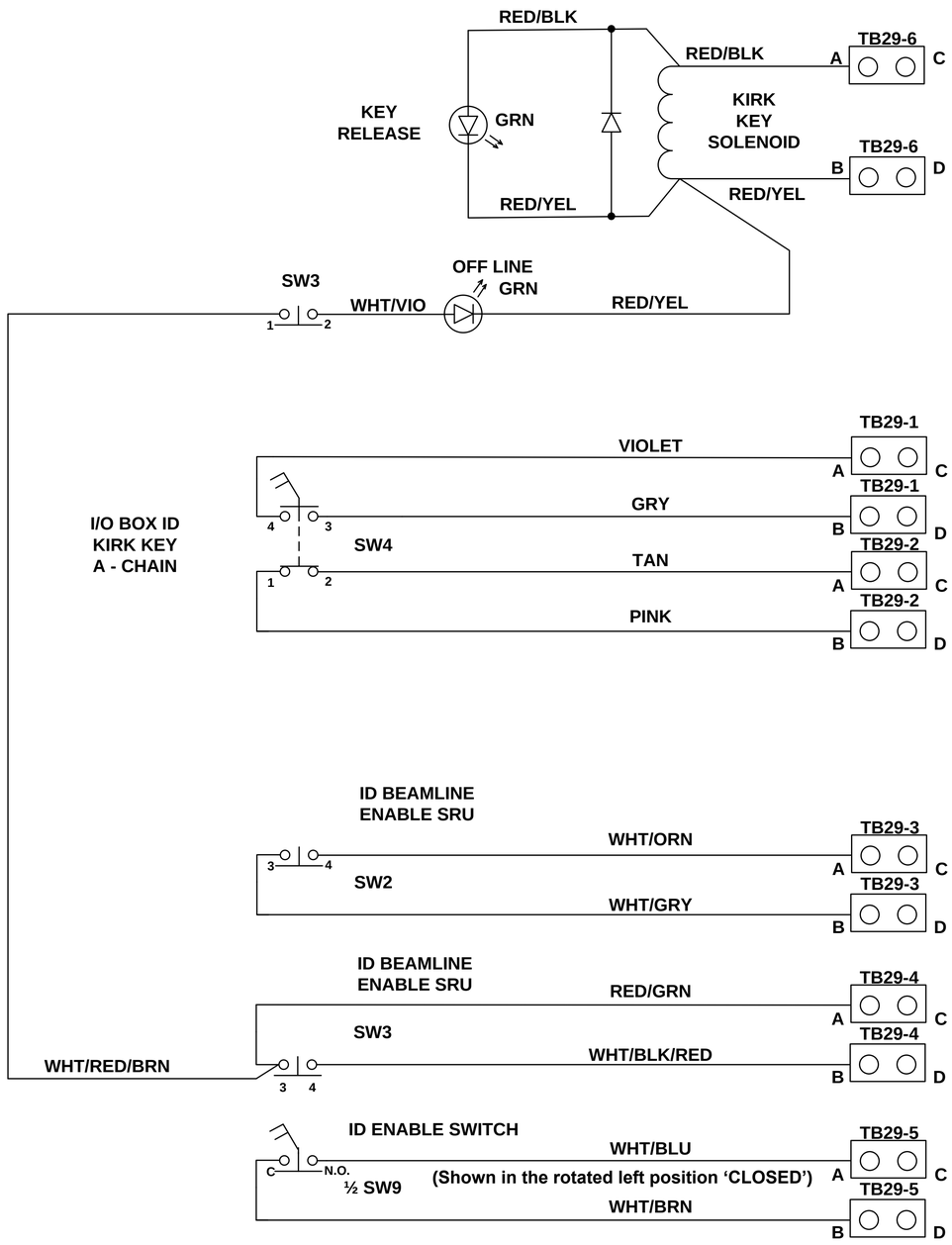

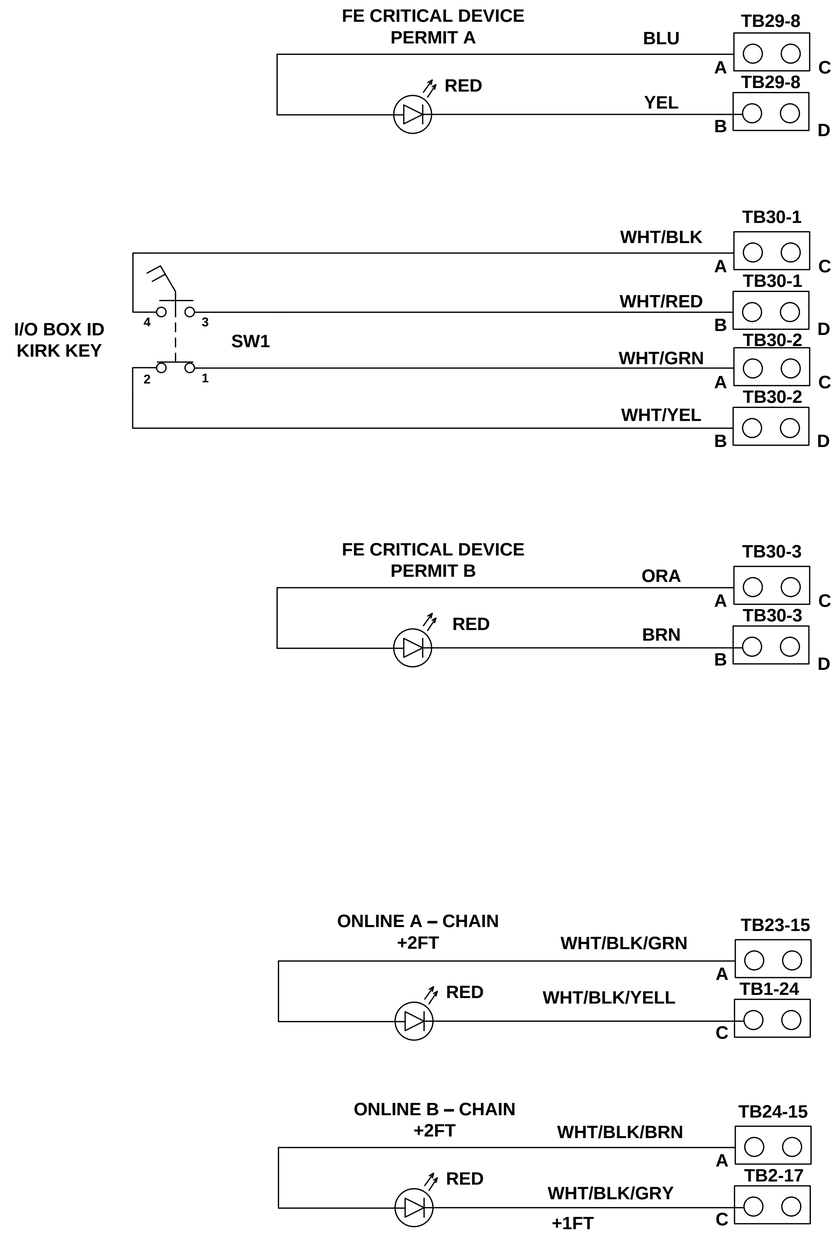

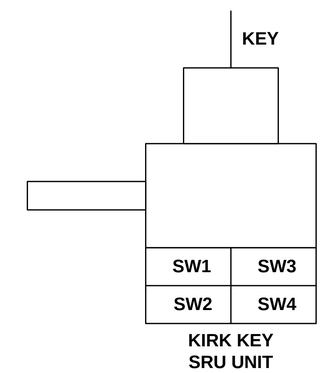

PIGTAIL
TB 29 A- CHAIN 46" LONG
TB30 B – CHAIN 36" LONG

BM ½ BEAMLINE ENABLE PANEL

LT-EL-SR-EI DRAWING DIRECTORY	LT-EL-SR-EI-PPS-0207-90 DRAWING NUMBER	E REV
COMPUTER REPRODUCABLE	SCALE: N/A	SHEET 29 OF 61

LT-EL-SR-EI-PPS-0207-90

REV	DESCRIPTION	DATE	BY	CHECKED	APP
	SEE SHEET 1				

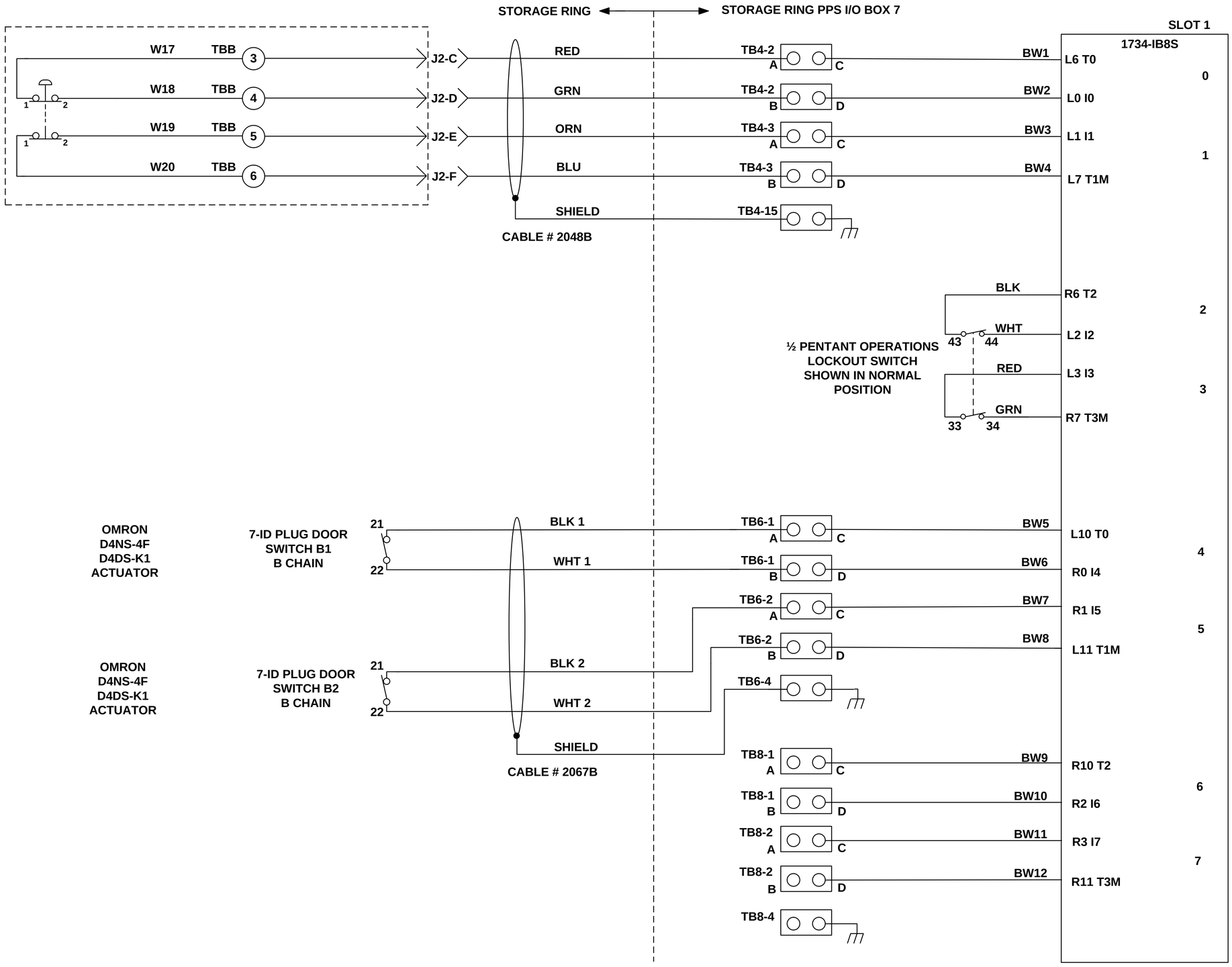

TO :
LT-ECN-017-1795
PAGE OF

COMMON GROUP

B

LT-EL-SR-EI-PPS-0207-90

LT-EL-SR-EI (DRAWING DIRECTORY)	LT-EL-SR-EI-PPS-0207-90 (DRAWING NUMBER)	E (REV)
COMPUTER REPRODUCABLE	SCALE: N/A	SHEET 30 OF 61

REV	DESCRIPTION	DATE	BY	CHECKED	APP
	SEE SHEET 1				

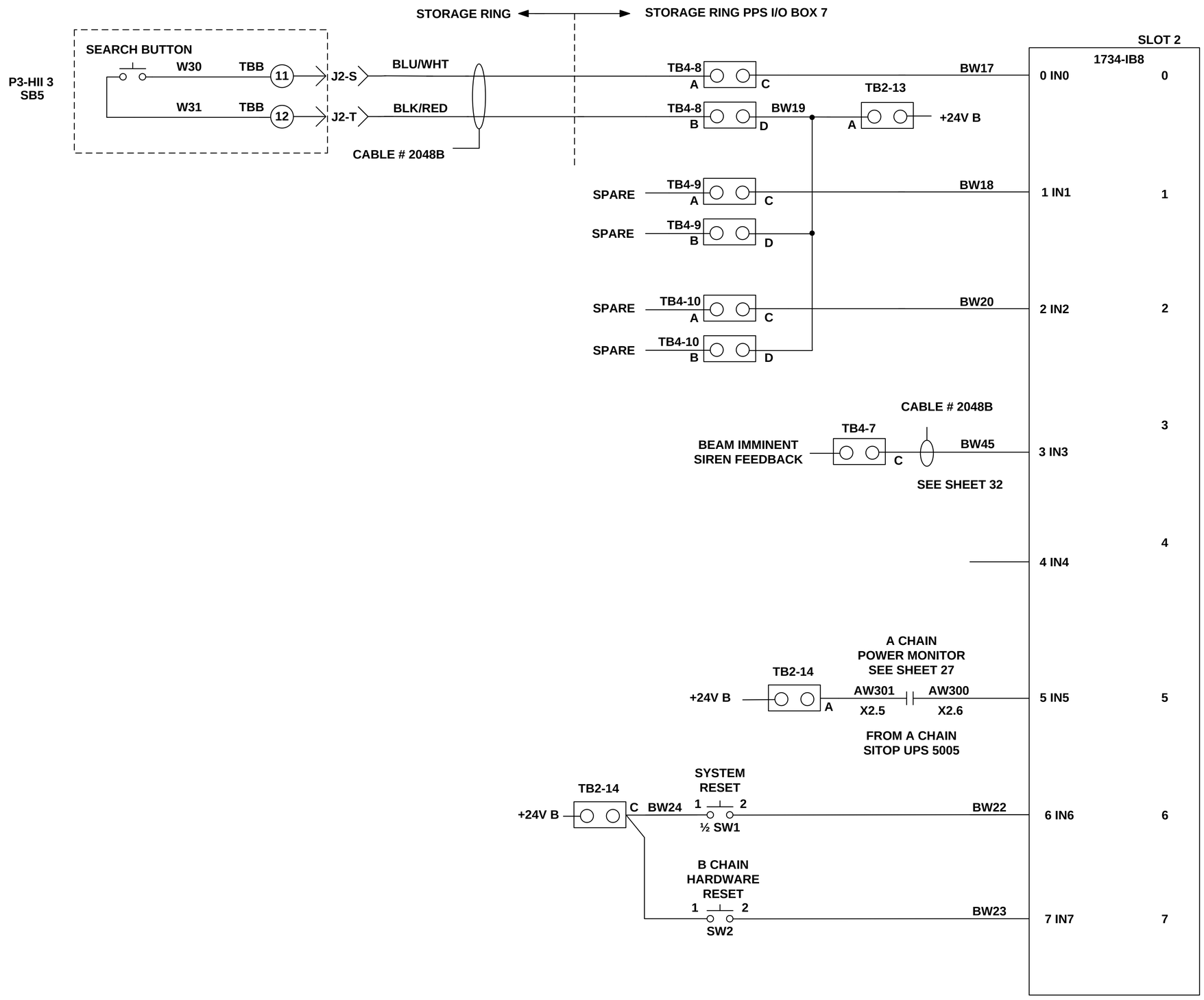

TO :
LT-ECN-017-1795
PAGE OF

COMMON GROUP

B

LT-EL-SR-EI-PPS-0207-90

LT-EL-SR-EI (DRAWING DIRECTORY)	LT-EL-SR-EI-PPS-0207-90 (DRAWING NUMBER)	E (REV)
COMPUTER REPRODUCABLE	SCALE: N/A	SHEET 31 OF 61

REV	DESCRIPTION	DATE	BY	CHECKED	APP
	SEE SHEET 1				

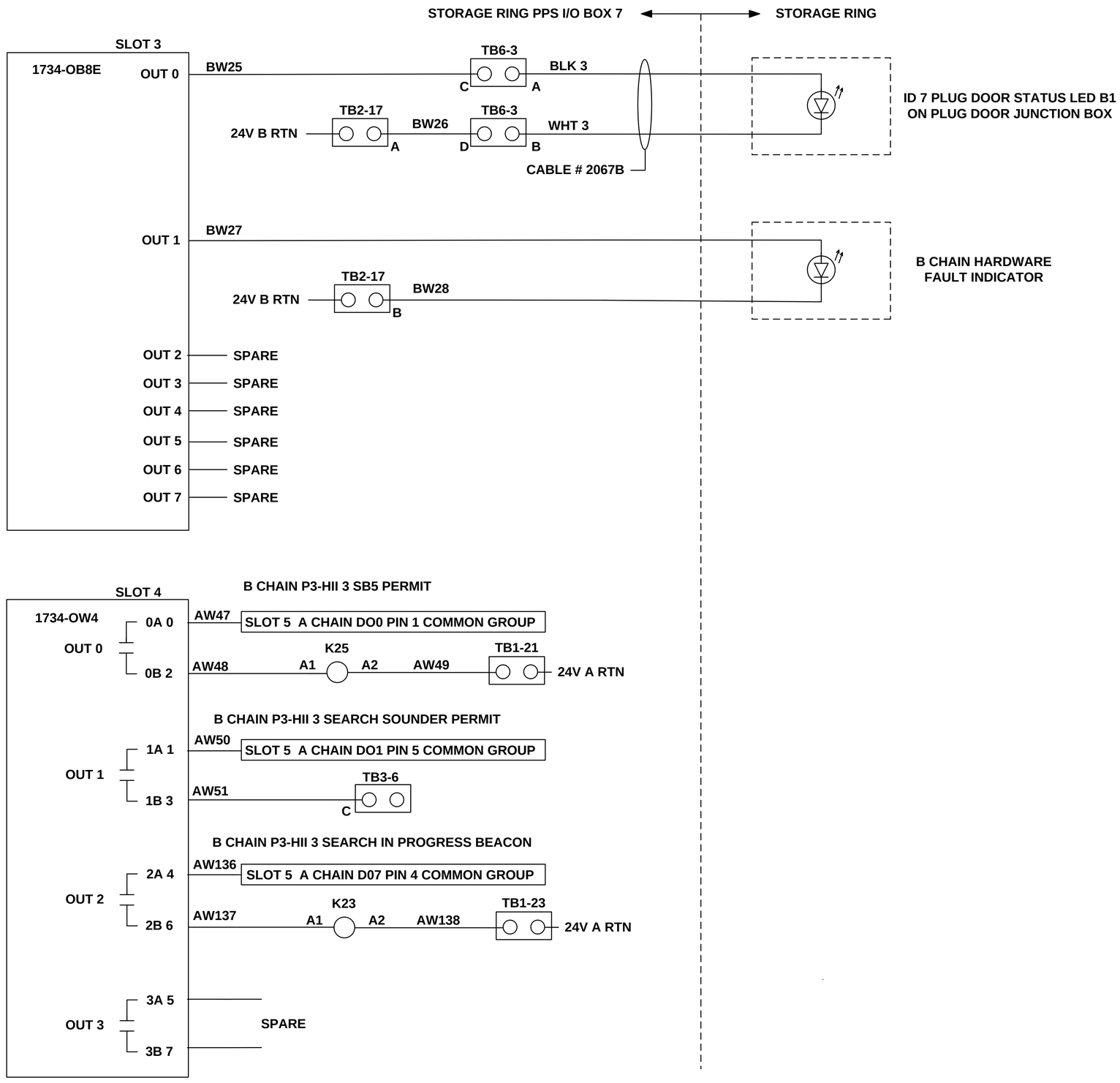

TO :
LT-ECN-017-1795
PAGE OF

COMMON GROUP

B

LT-EL-SR-EI-PPS-0207-90

LT-EL-SR-EI (DRAWING DIRECTORY)	LT-EL-SR-EI-PPS-0207-90 (DRAWING NUMBER)	E (REV)
COMPUTER REPRODUCABLE	SCALE: N/A	SHEET 32 OF 61

REV	DESCRIPTION	DATE	BY	CHECKED	APP
	SEE SHEET 1				

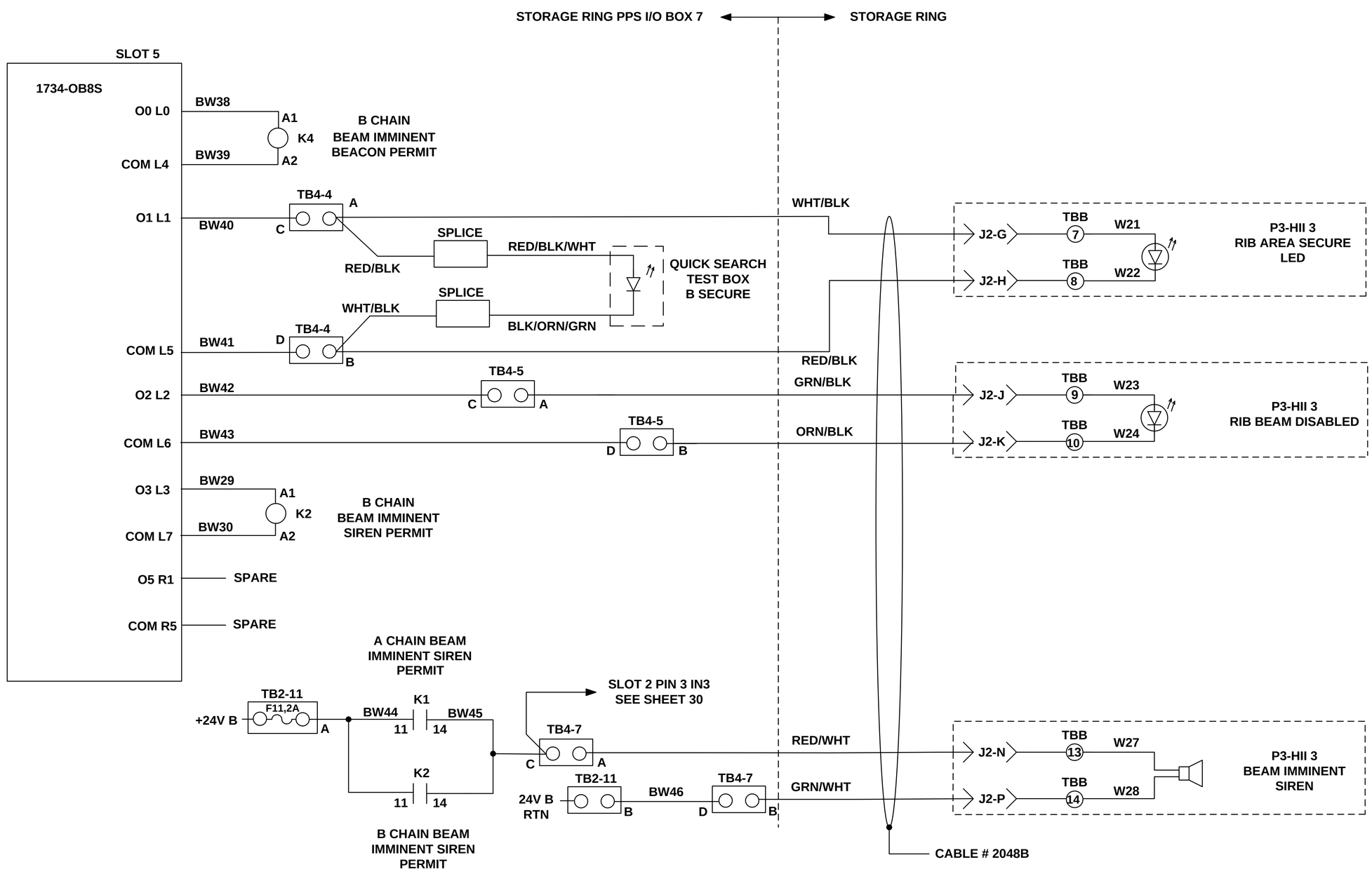

TO :
LT-ECN-017-1795
PAGE OF

COMMON GROUP

B

LT-EL-SR-EI (DRAWING DIRECTORY)	LT-EL-SR-EI-PPS-0207-90 (DRAWING NUMBER)	E (REV)
COMPUTER REPRODUCABLE	SCALE: N/A	SHEET 33 OF 61

LT-EL-SR-EI-PPS-0207-90

REV	DESCRIPTION	DATE	BY	CHECKED	APP
	SEE SHEET 1				

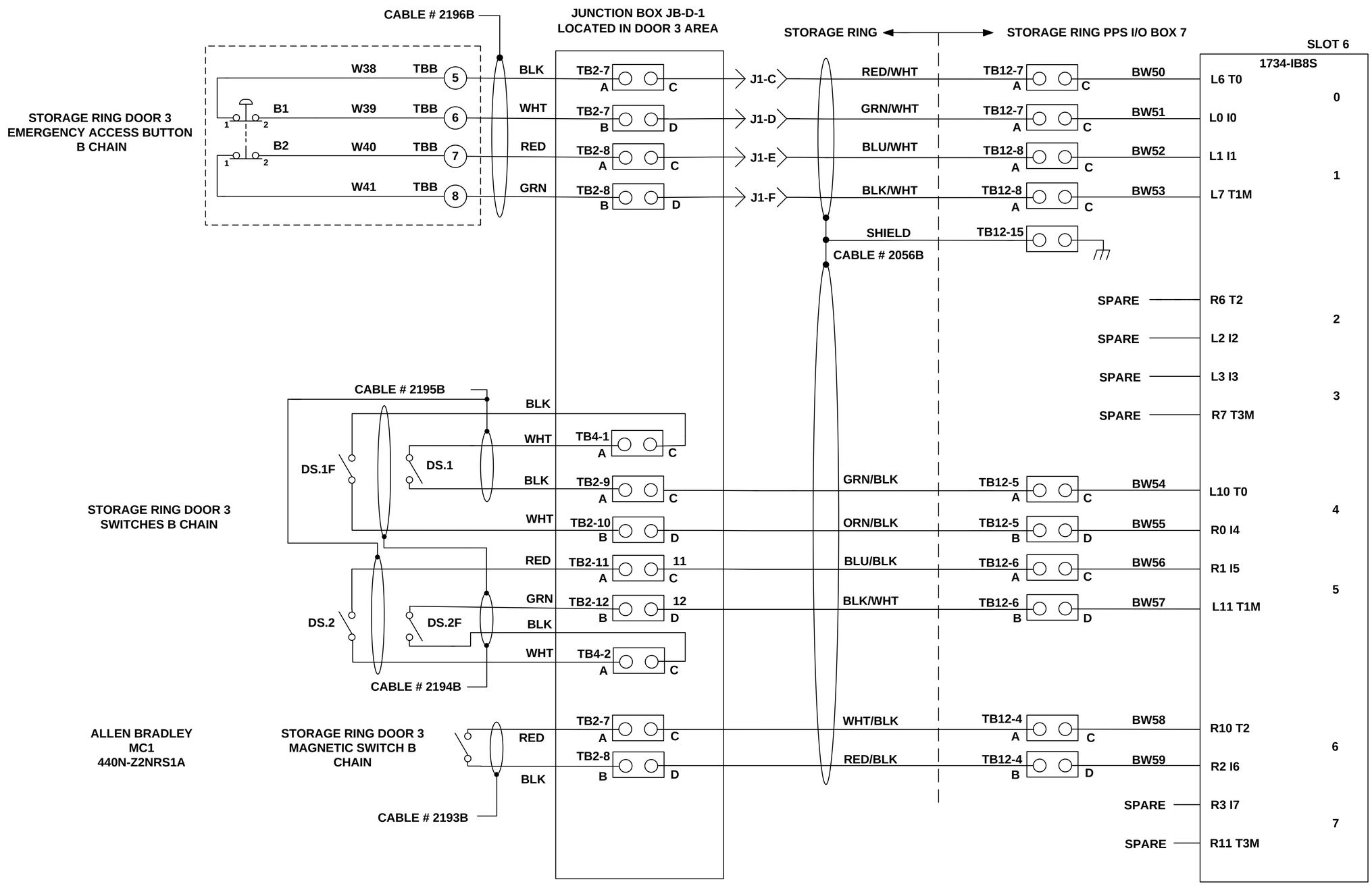

TO :
LT-ECN-017-1795
PAGE OF

GATE / LABYRINTH / GROUP
DOOR 3

B

LT-EL-SR-EI-PPS-0207-90

LT-EL-SR-EI (DRAWING DIRECTORY)	LT-EL-SR-EI-PPS-0207-90 (DRAWING NUMBER)	E (REV)
COMPUTER REPRODUCABLE	SCALE: N/A	SHEET 34 OF 61

REV	DESCRIPTION	DATE	BY	CHECKED	APP
	SEE SHEET 1				

TO :
LT-ECN-017-1795
PAGE OF

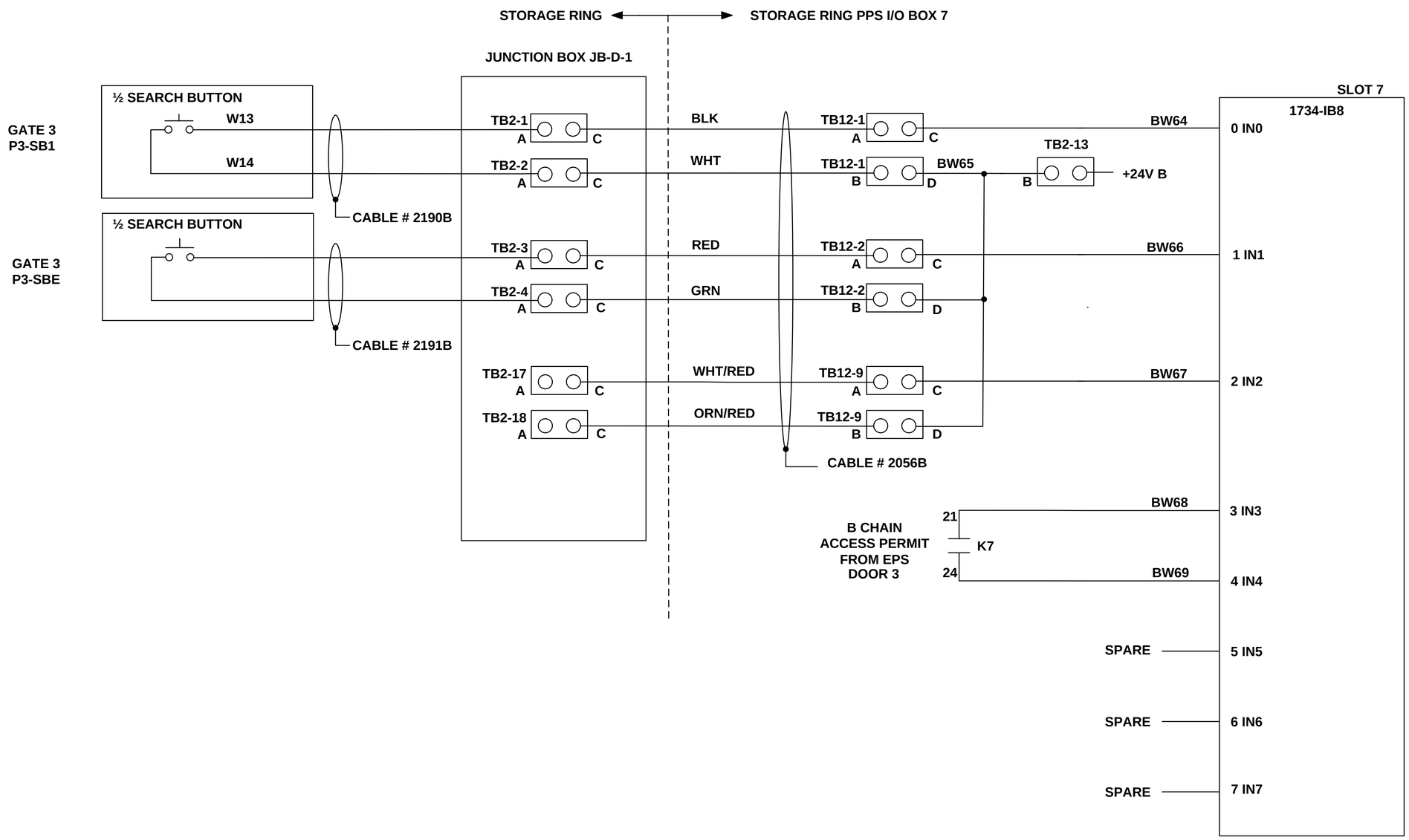

GATE / LABYRINTH / GROUP
DOOR 3

B

LT-EL-SR-EI (DRAWING DIRECTORY)	LT-EL-SR-EI-PPS-0207-90 (DRAWING NUMBER)	E (REV)
COMPUTER REPRODUCABLE	SCALE: N/A	SHEET 35 OF 61

LT-EL-SR-EI-PPS-0207-90

REV	DESCRIPTION	DATE	BY	CHECKED	APP
	SEE SHEET 1				

STORAGE RING PPS I/O BOX 7 ⟷ STORAGE RING

TO :
LT-ECN-017-1795
PAGE OF

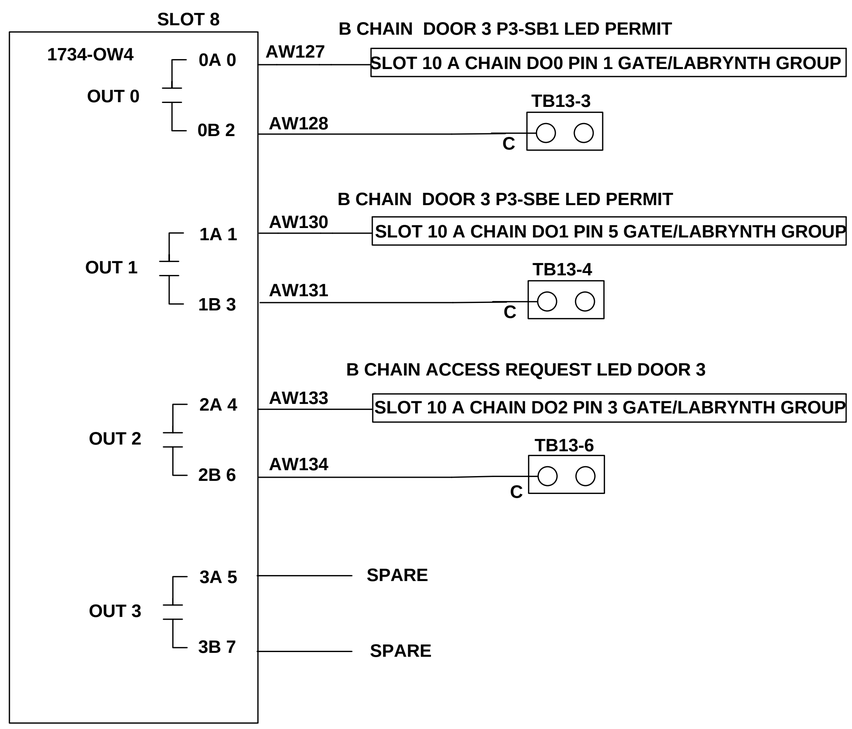

GATE / LABYRINTH / GROUP DOOR 3

B

LT-EL-SR-EI (DRAWING DIRECTORY)	LT-EL-SR-EI-PPS-0207-90 (DRAWING NUMBER)	E (REV)
COMPUTER REPRODUCABLE	SCALE: N/A	SHEET 36 OF 61

LT-EL-SR-EI-PPS-0207-90

REV	DESCRIPTION	DATE	BY	CHECKED	APP
	SEE SHEET 1				

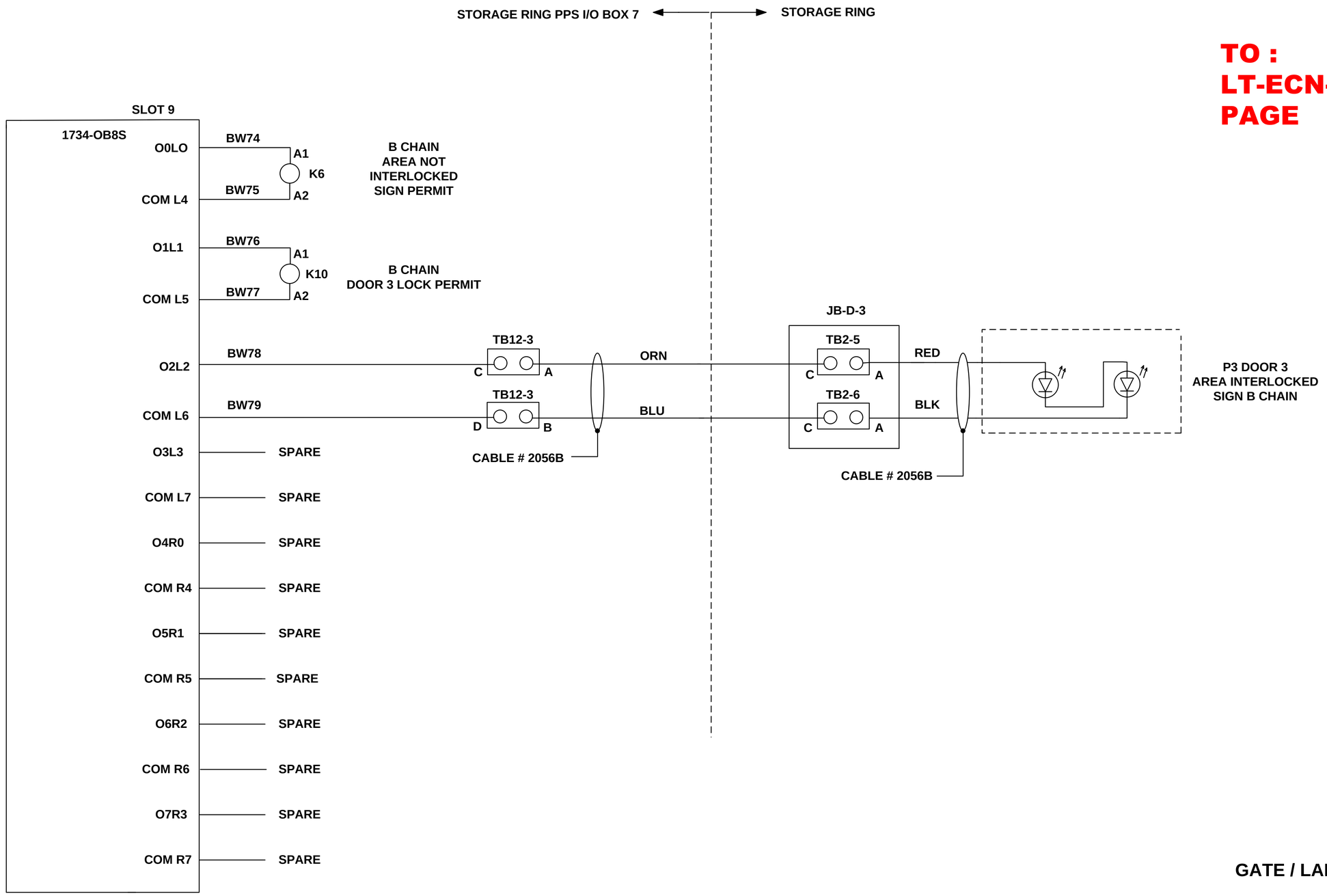

TO :
LT-ECN-017-1795
PAGE OF

GATE / LABYRINTH / GROUP
DOOR 3

B

LT-EL-SR-EI (DRAWING DIRECTORY)	LT-EL-SR-EI-PPS-0207-90 (DRAWING NUMBER)	E (REV)
COMPUTER REPRODUCABLE	SCALE: N/A	SHEET 37 OF 61

LT-EL-SR-EI-PPS-0207-90

REV	DESCRIPTION	DATE	BY	CHECKED	APP
	SEE SHEET 1				

TO :
LT-ECN-017-1795
PAGE OF

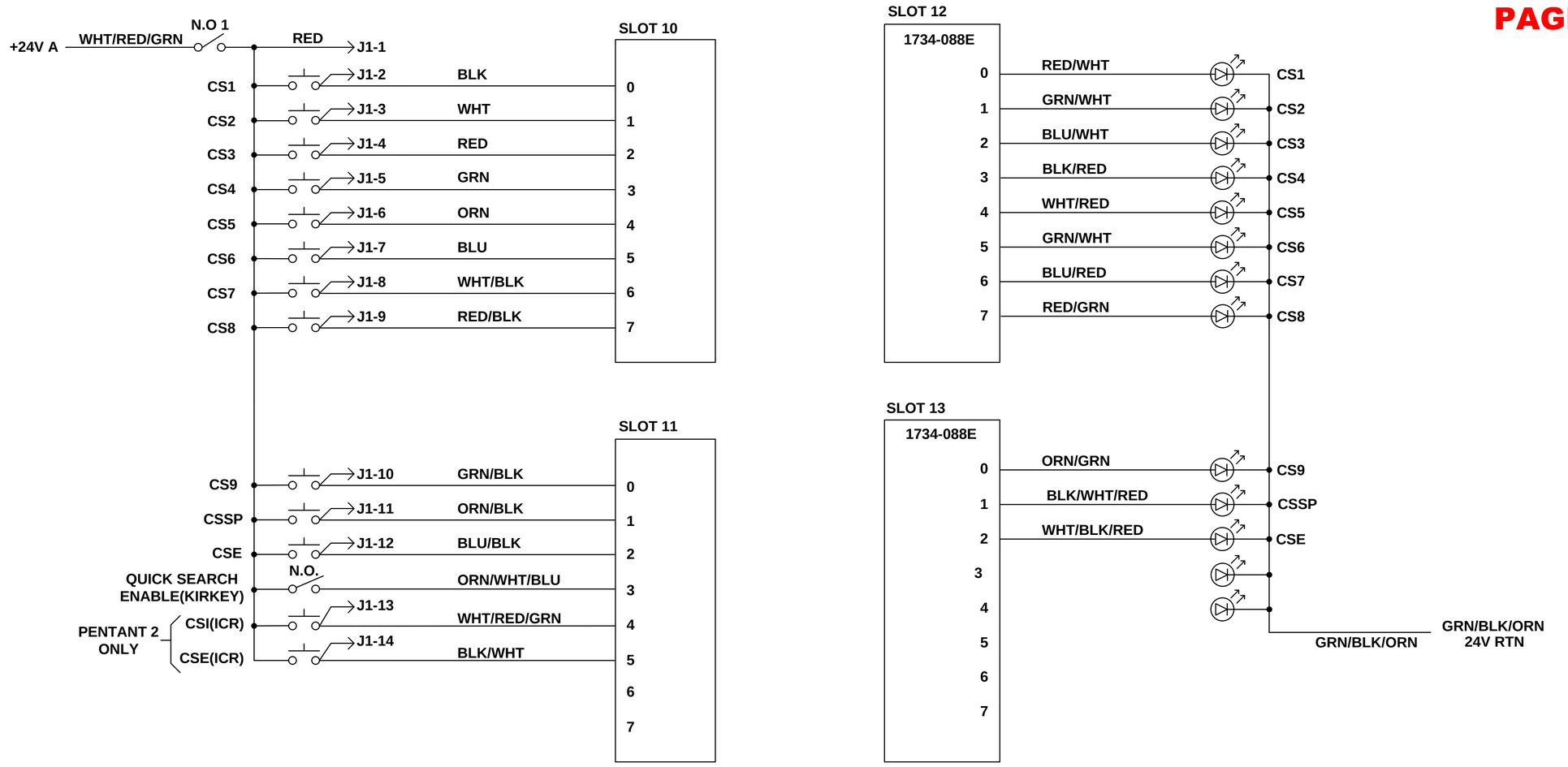

QUICK SEARCH
TEST BOX

COMMON GROUP

B

LT-EL-SR-EI (DRAWING DIRECTORY)	LT-EL-SR-EI-PPS-0207-90 (DRAWING NUMBER)	E (REV)
COMPUTER REPRODUCABLE	SCALE: N/A	SHEET 38 OF 61

LT-EL-SR-EI-PPS-0207-90

REV	DESCRIPTION	DATE	BY	CHECKED	APP
	SEE SHEET 1				

TO :
LT-ECN-017-1795
PAGE OF

SHEET LEFT BLANK
FOR FUTURE DATA

LT-EL-SR-EI-PPS-0207-90

LT-EL-SR-EI DRAWING DIRECTORY	LT-EL-SR-EI-PPS-0207-90 DRAWING NUMBER	E REV
COMPUTER REPRODUCABLE	SCALE: N/A	SHEET 39 OF 61

REV	DESCRIPTION	DATE	BY	CHECKED	APP
	SEE SHEET 1				

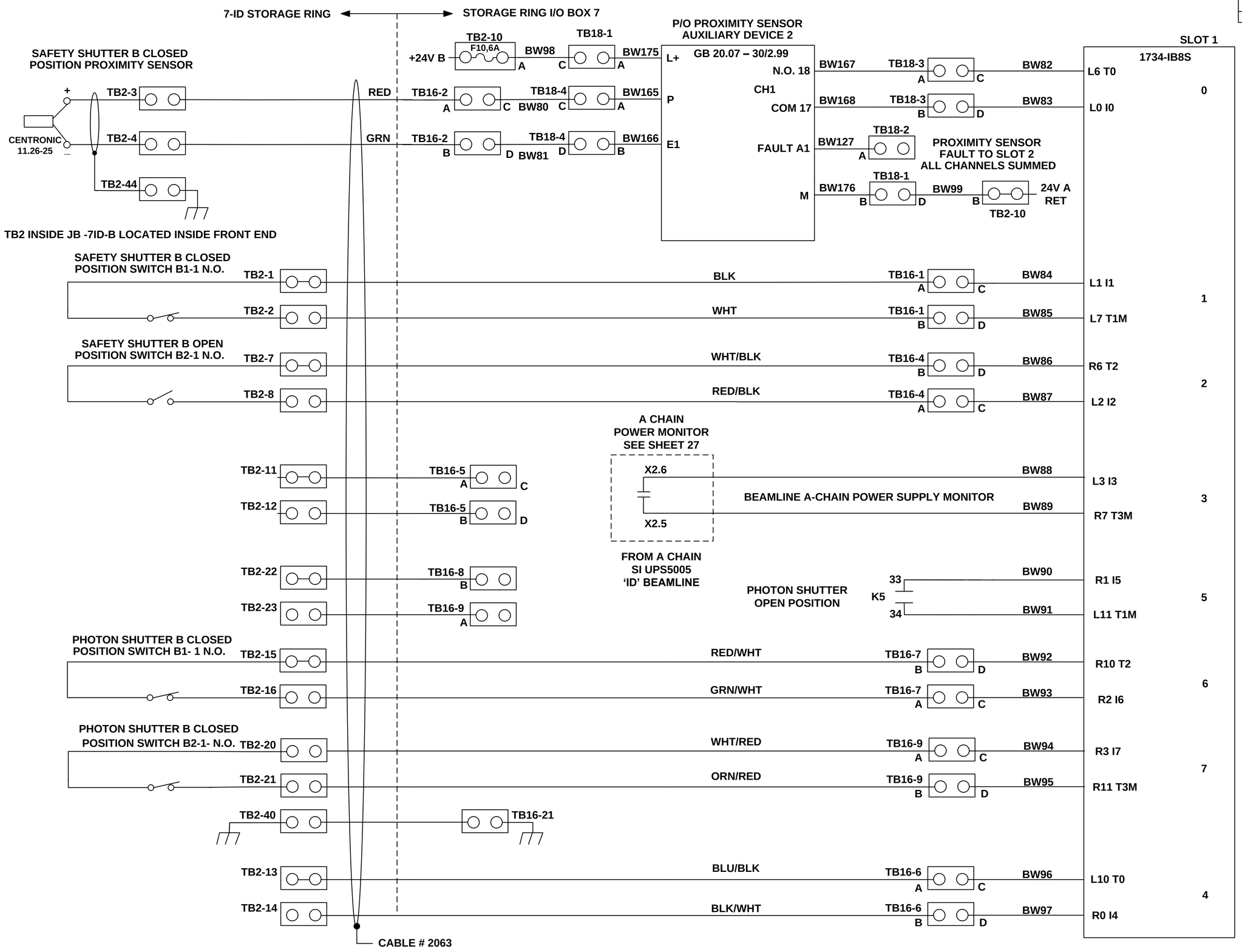

TO :
LT-ECN-017-1795
PAGE OF

ID BEAMLINE GROUP

7-ID

B

LT-EL-SR-EI (DRAWING DIRECTORY)	LT-EL-SR-EI-PPS-0207-90 (DRAWING NUMBER)	E (REV)
COMPUTER REPRODUCABLE	SCALE: N/A	SHEET 40 OF 61

LT-EL-SR-EI-PPS-0207-90

REV	DESCRIPTION	DATE	BY	CHECKED	APP
	SEE SHEET 1				

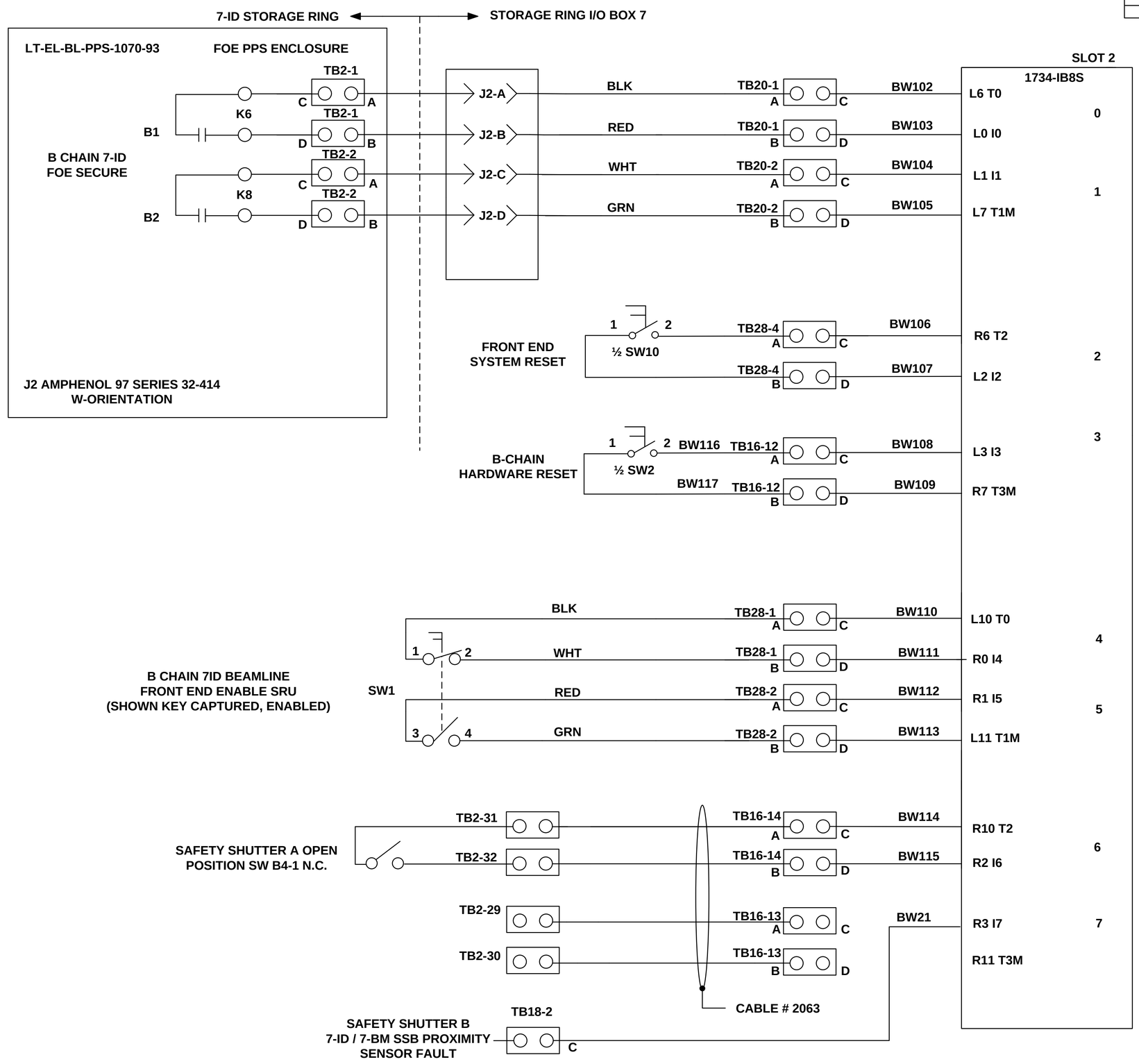

TO :
LT-ECN-017-1795
PAGE OF

ID BEAMLINE GROUP
7-ID
B

LT-EL-SR-EI-PPS-0207-90

LT-EL-SR-EI (DRAWING DIRECTORY)	LT-EL-SR-EI-PPS-0207-90 (DRAWING NUMBER)	E (REV)
COMPUTER REPRODUCABLE	SCALE: N/A	SHEET 41 OF 61

REV	DESCRIPTION	DATE	BY	CHECKED	APP
	SEE SHEET 1				

TO :
LT-ECN-017-1795
PAGE OF

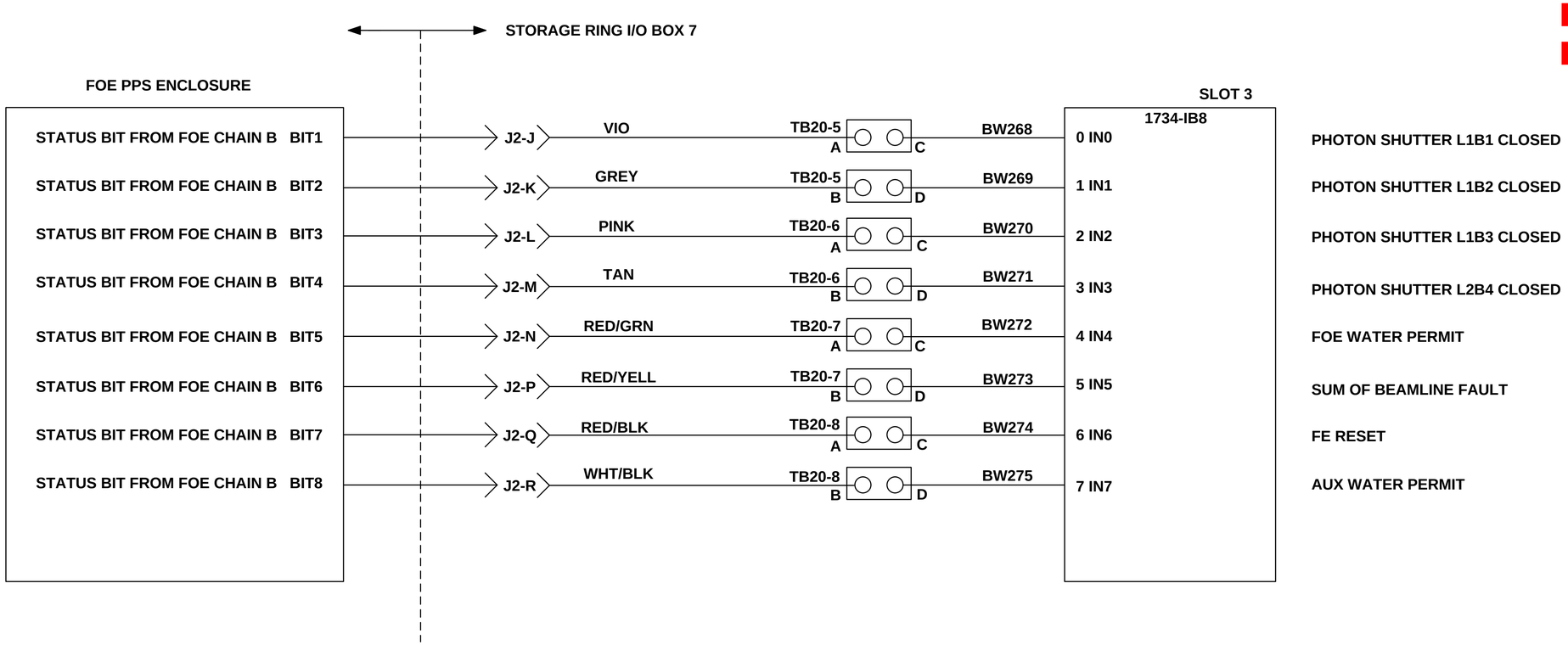

ID BEAMLINE GROUP

7-ID

B

LT-EL-SR-EI-PPS-0207-90

LT-EL-SR-EI (DRAWING DIRECTORY)	LT-EL-SR-EI-PPS-0207-90 (DRAWING NUMBER)	E (REV)
COMPUTER REPRODUCABLE	SCALE: N/A	SHEET 42 OF 61

REV	DESCRIPTION	DATE	BY	CHECKED	APP
	SEE SHEET 1				

TO :
LT-ECN-017-1795
PAGE OF

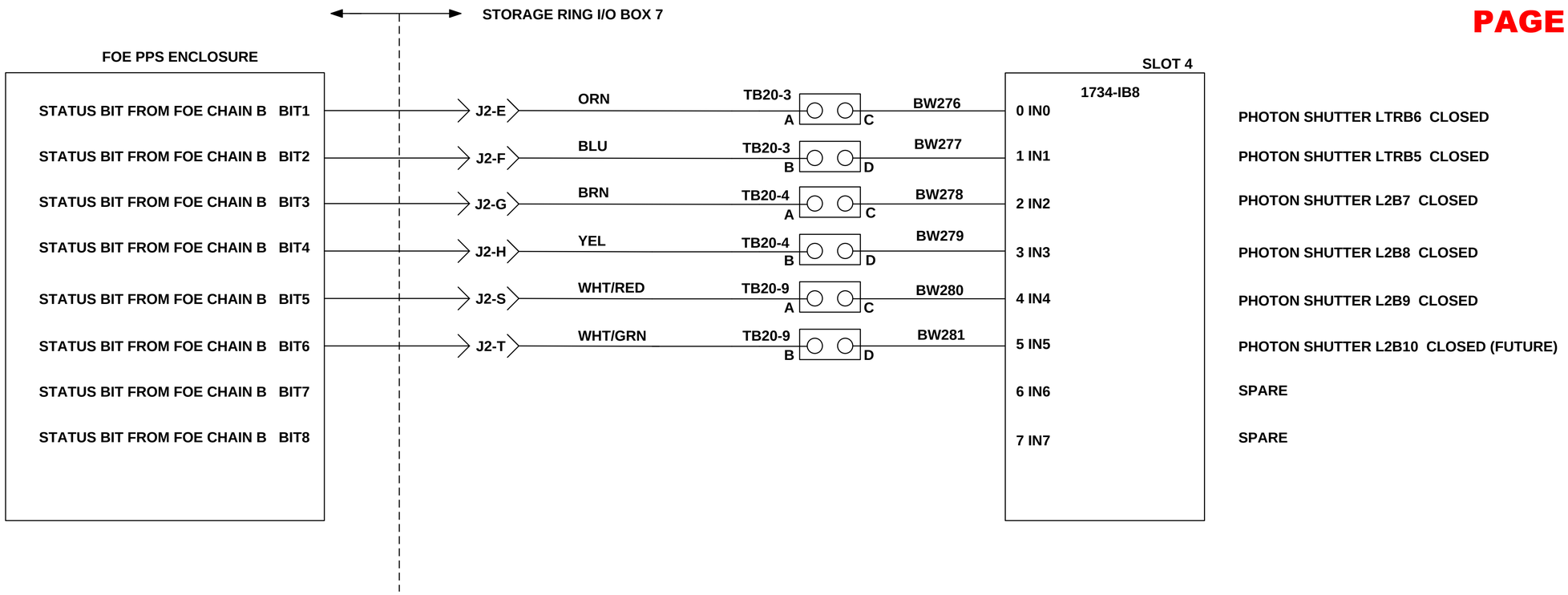

ID BEAMLINE GROUP

7-ID

B

LT-EL-SR-EI (DRAWING DIRECTORY)	LT-EL-SR-EI-PPS-0207-90 (DRAWING NUMBER)	E (REV)
COMPUTER REPRODUCABLE	SCALE: N/A	SHEET 43 OF 61

LT-EL-SR-EI-PPS-0207-90

REV	DESCRIPTION	DATE	BY	CHECKED	APP
	SEE SHEET 1				

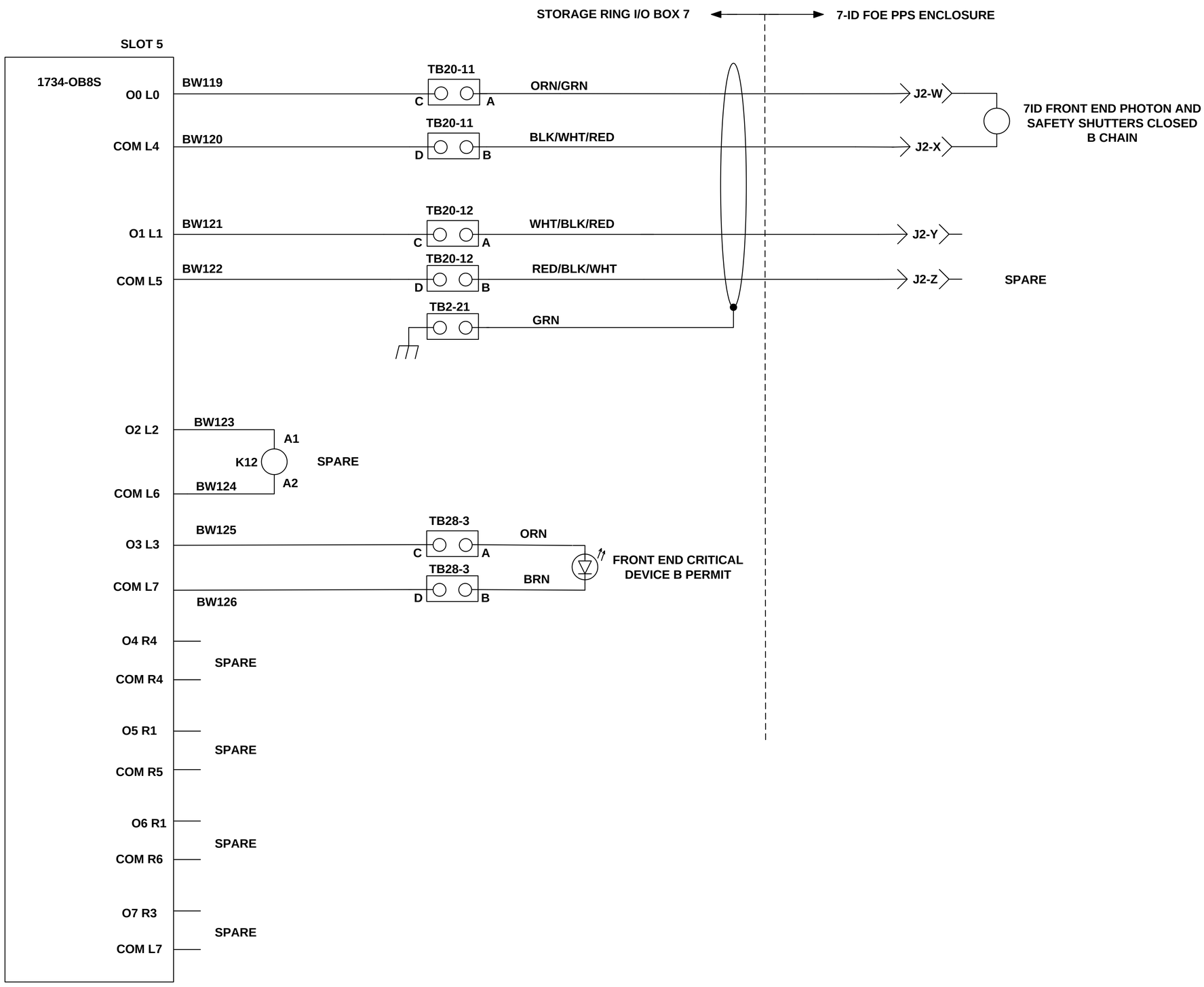

TO :
LT-ECN-017-1795
PAGE OF

ID BEAMLINE GROUP
7-ID
B

LT-EL-SR-EI-PPS-0207-90

LT-EL-SR-EI (DRAWING DIRECTORY)	LT-EL-SR-EI-PPS-0207-90 (DRAWING NUMBER)	E (REV)
COMPUTER REPRODUCABLE	SCALE: N/A	SHEET 44 OF 61

REV	DESCRIPTION	DATE	BY	CHECKED	APP
	SEE SHEET 1				

TO :
LT-ECN-017-1795
PAGE OF

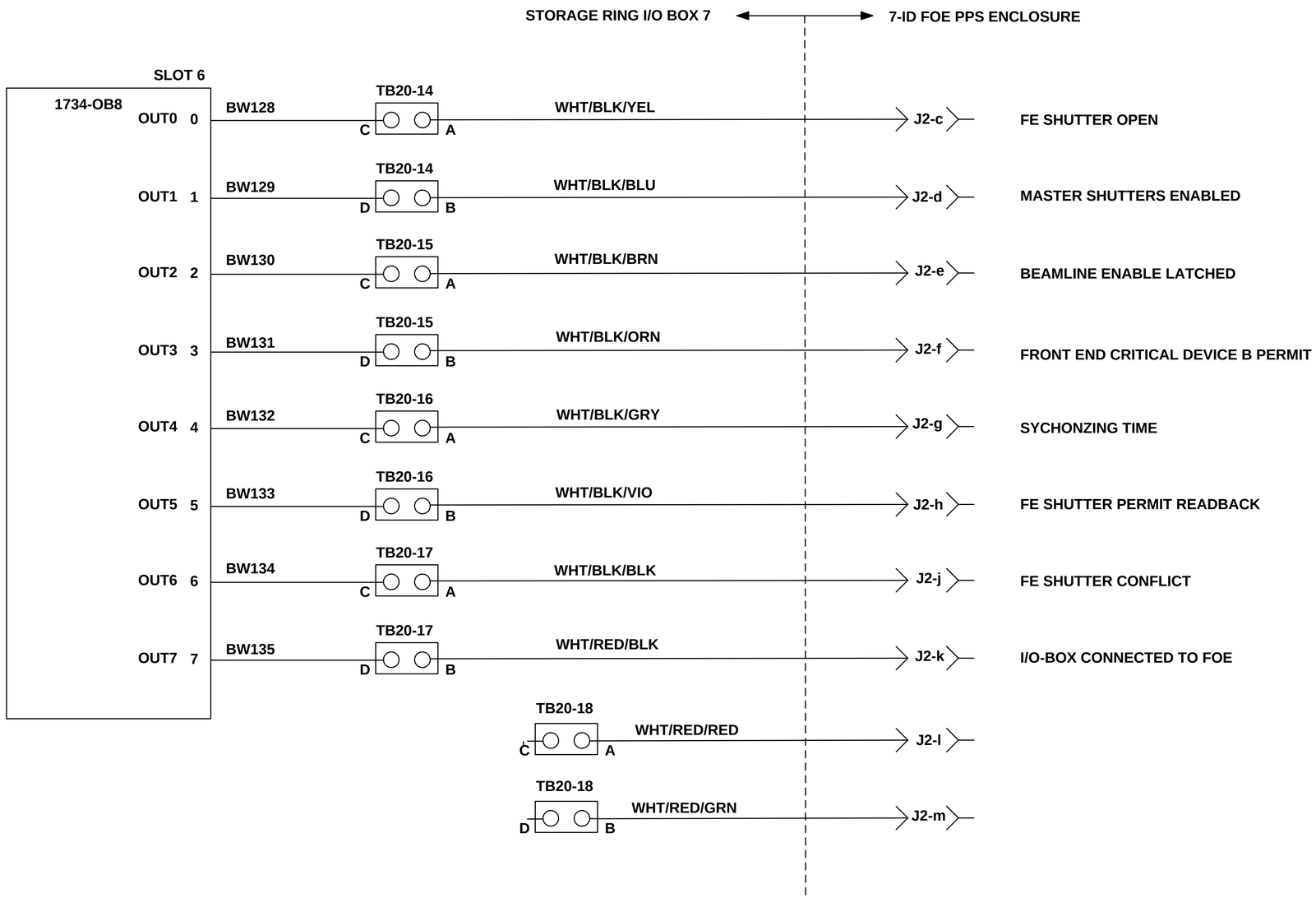

ID BEAMLINE GROUP

7-ID

B

LT-EL-SR-EI-PPS-0207-90

LT-EL-SR-EI (DRAWING DIRECTORY)	LT-EL-SR-EI-PPS-0207-90 (DRAWING NUMBER)	E (REV)
COMPUTER REPRODUCABLE	SCALE: N/A	SHEET 45 OF 61

REV	DESCRIPTION	DATE	BY	CHECKED	APP
	SEE SHEET 1				

TO :
LT-ECN-017-1795
PAGE OF

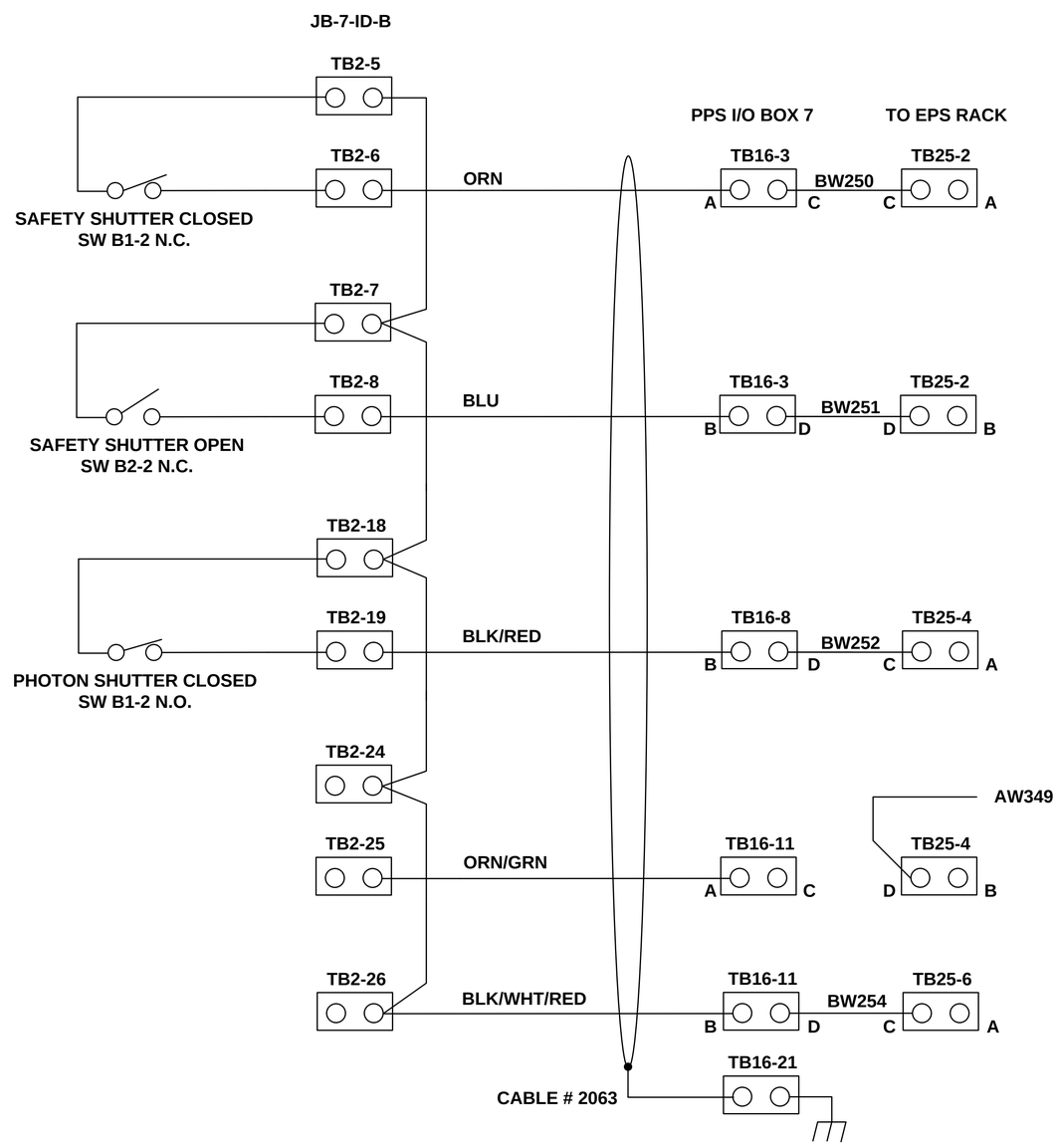

ID BEAMLINE GROUP

7-ID

B

LT-EL-SR-EI (DRAWING DIRECTORY)	LT-EL-SR-EI-PPS-0207-90 (DRAWING NUMBER)	E (REV)
COMPUTER REPRODUCABLE	SCALE: N/A	SHEET 46 OF 61

LT-EL-SR-EI-PPS-0207-90

REV	DESCRIPTION	DATE	BY	CHECKED	APP
	SEE SHEET 1				

TO :
LT-ECN-017-1795
PAGE OF

SHEET LEFT BLANK
FOR FUTURE DATA

LT-EL-SR-EI-PPS-0207-90

LT-EL-SR-EI (DRAWING DIRECTORY)	LT-EL-SR-EI-PPS-0207-90 (DRAWING NUMBER)	E (REV)
COMPUTER REPRODUCABLE	SCALE: N/A	SHEET 47 OF 61

REV	DESCRIPTION	DATE	BY	CHECKED	APP
	SEE SHEET 1				

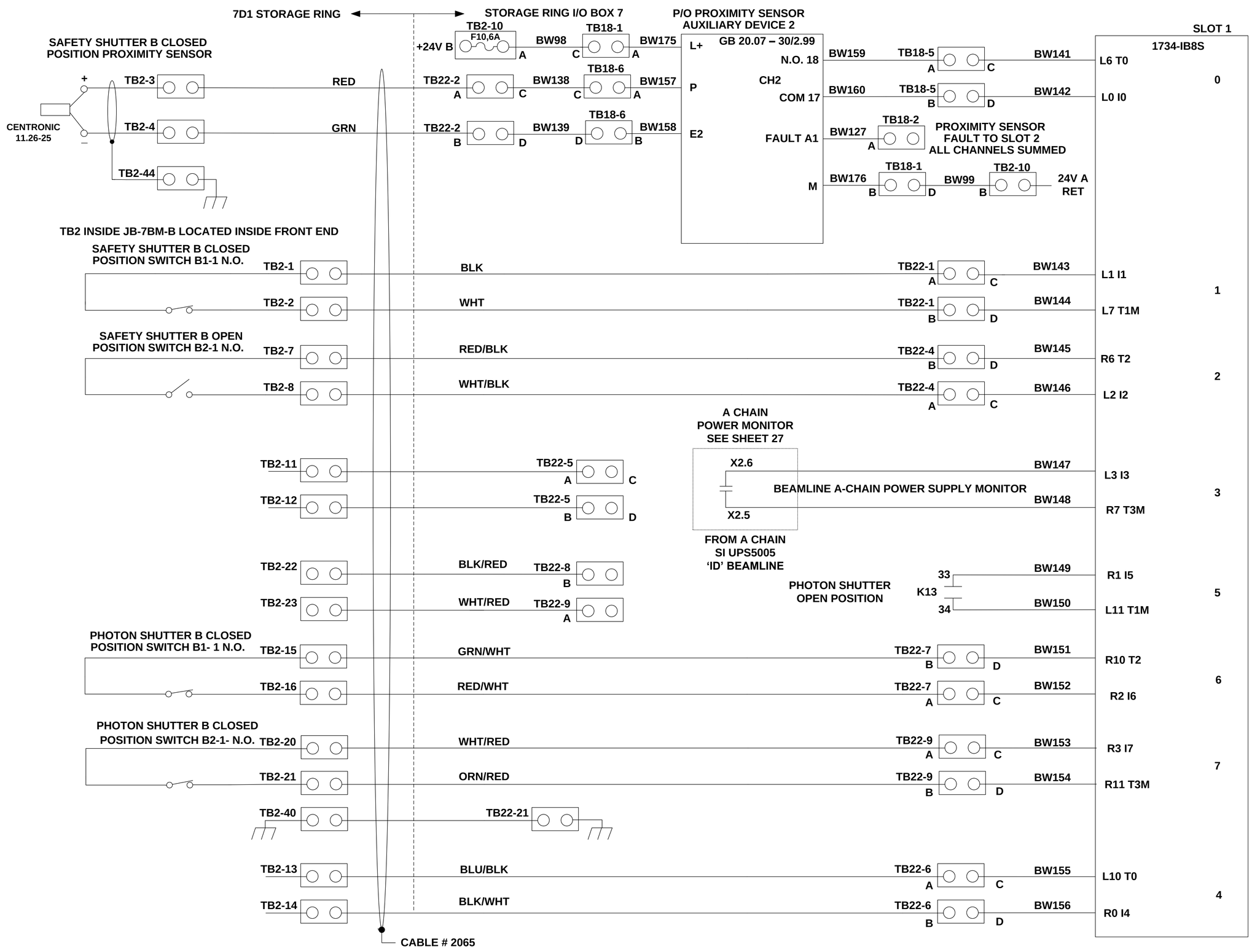

TO :
LT-ECN-017-1795
PAGE OF

BM BEAMLINE GROUP
7-BM
B

LT-EL-SR-EI-PPS-0207-90

LT-EL-SR-EI (DRAWING DIRECTORY)	LT-EL-SR-EI-PPS-0207-90 (DRAWING NUMBER)	E (REV)
COMPUTER REPRODUCABLE	SCALE: N/A	SHEET 48 OF 61

REV	DESCRIPTION	DATE	BY	CHECKED	APP
	SEE SHEET 1				

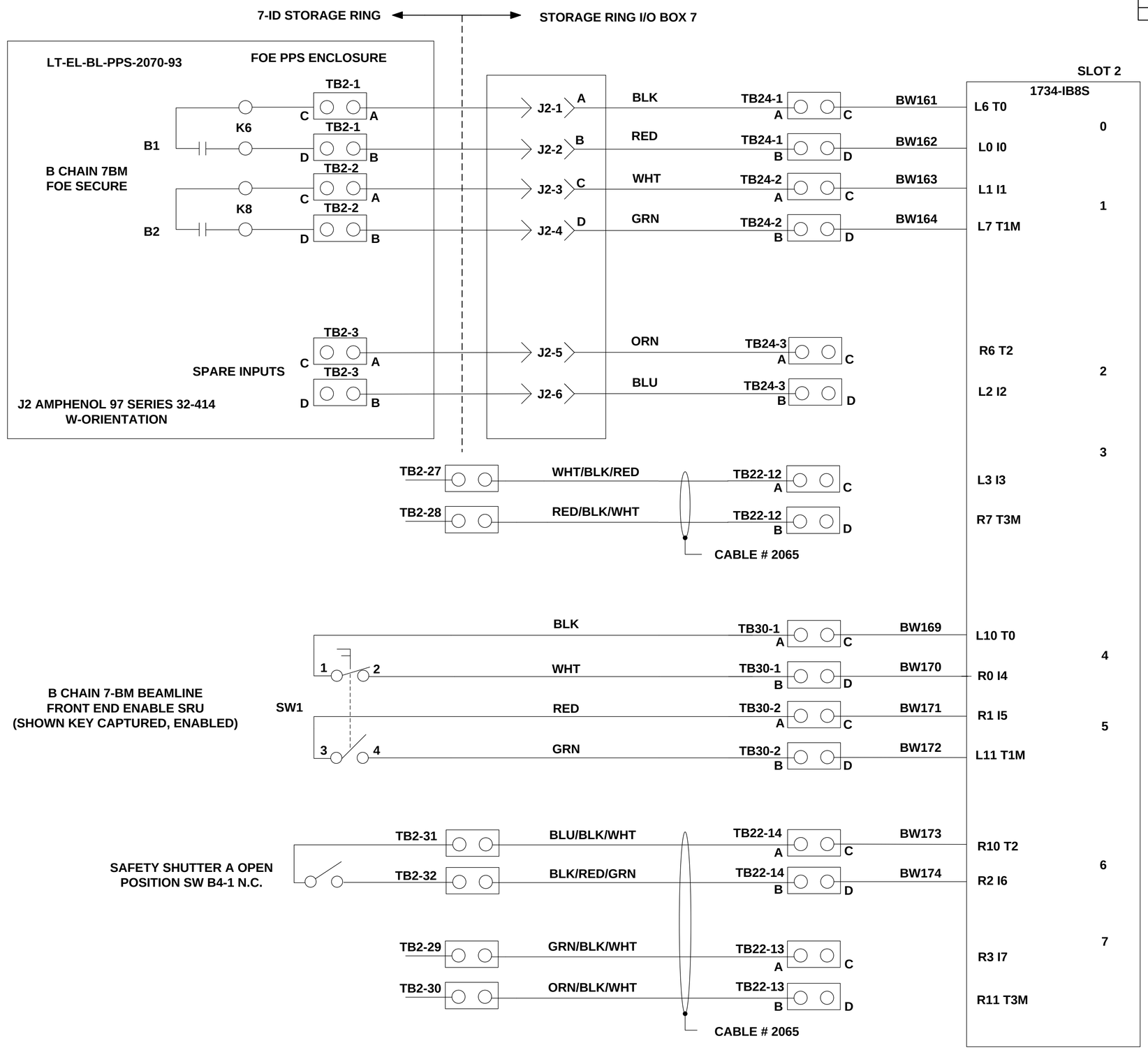

TO :
LT-ECN-017-1795
PAGE OF

BM BEAMLINE GROUP
7-BM
B

LT-EL-SR-EI-PPS-0207-90

LT-EL-SR-EI (DRAWING DIRECTORY)	LT-EL-SR-EI-PPS-0207-90 (DRAWING NUMBER)	E (REV)
COMPUTER REPRODUCABLE	SCALE: N/A	SHEET 49 OF 61

REV	DESCRIPTION	DATE	BY	CHECKED	APP
	SEE SHEET 1				

TO :
LT-ECN-017-1795
PAGE OF

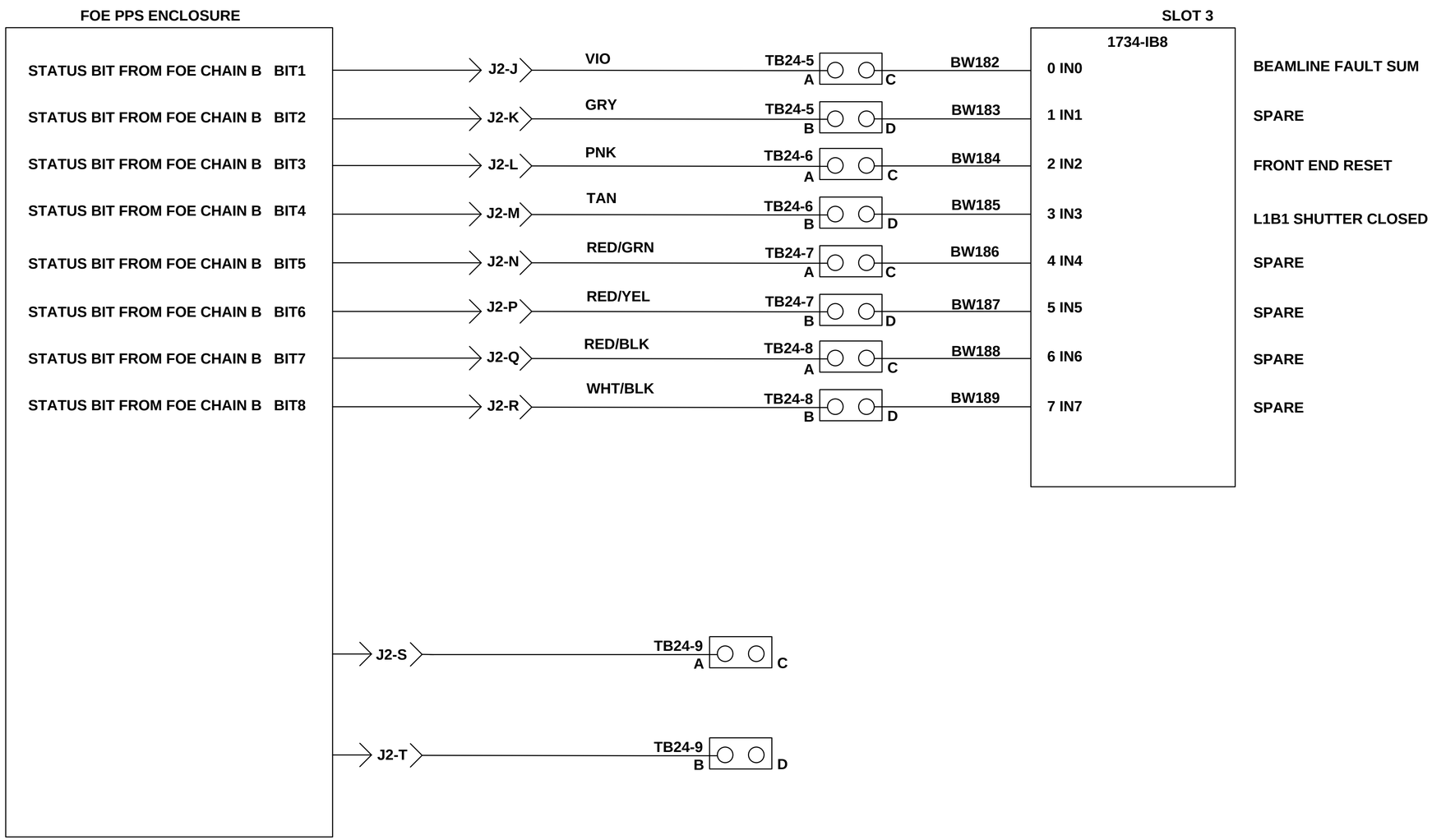

BM BEAMLINE GROUP
7-BM
B

LT-EL-SR-EI (DRAWING DIRECTORY)	LT-EL-SR-EI-PPS-0207-90 (DRAWING NUMBER)	E (REV)
COMPUTER REPRODUCABLE	SCALE: N/A	SHEET 50 OF 61

LT-EL-SR-EI-PPS-0207-90

REV	DESCRIPTION	DATE	BY	CHECKED	APP
	SEE SHEET 1				

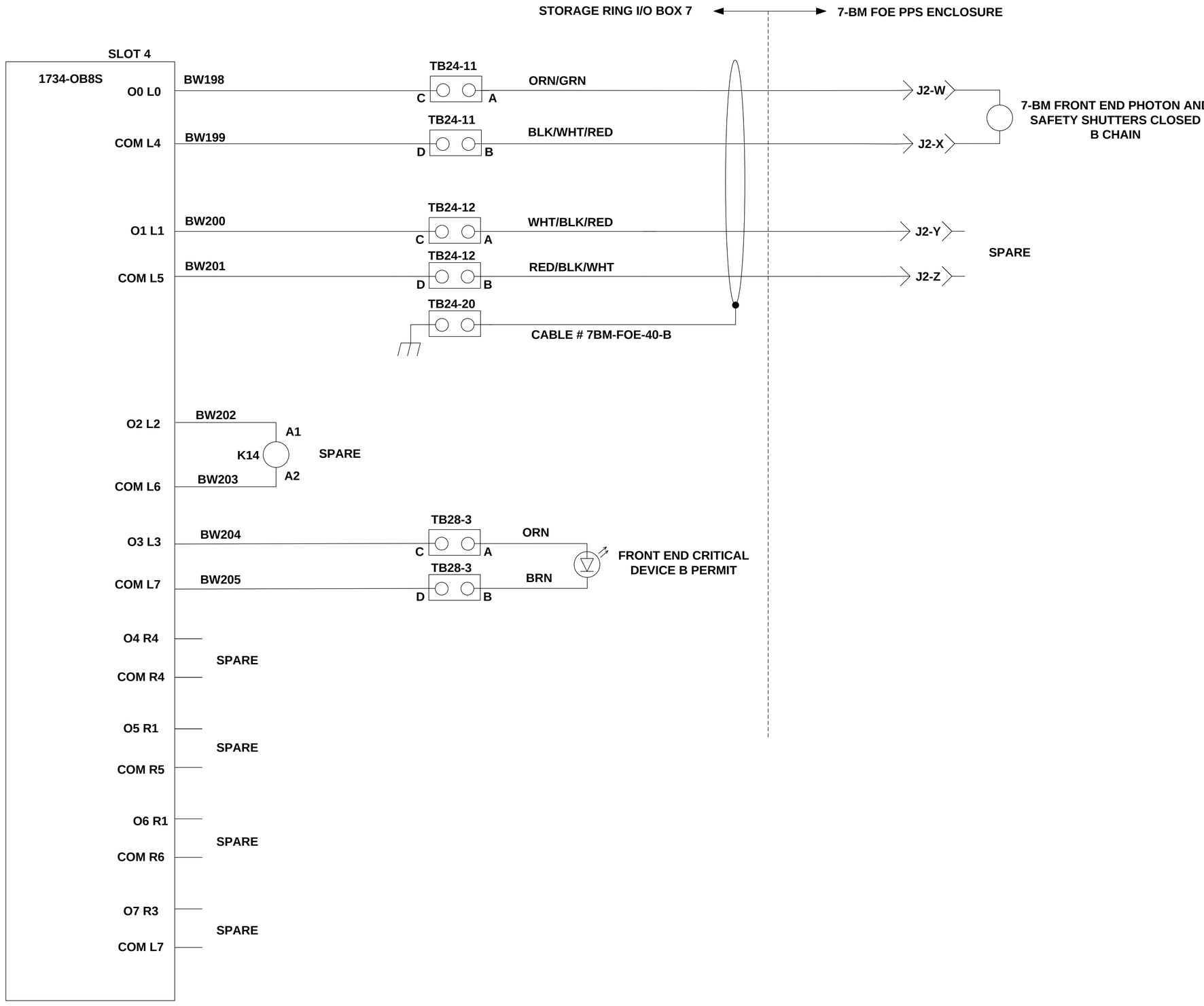

TO :
LT-ECN-017-1795
PAGE OF

BM BEAMLINE GROUP

7-BM

B

LT-EL-SR-EI (DRAWING DIRECTORY)	LT-EL-SR-EI-PPS-0207-90 (DRAWING NUMBER)	E (REV)
COMPUTER REPRODUCABLE	SCALE: N/A	SHEET 51 OF 61

LT-EL-SR-EI-PPS-0207-90

REV	DESCRIPTION	DATE	BY	CHECKED	APP
	SEE SHEET 1				

TO :
LT-ECN-017-1795
PAGE OF

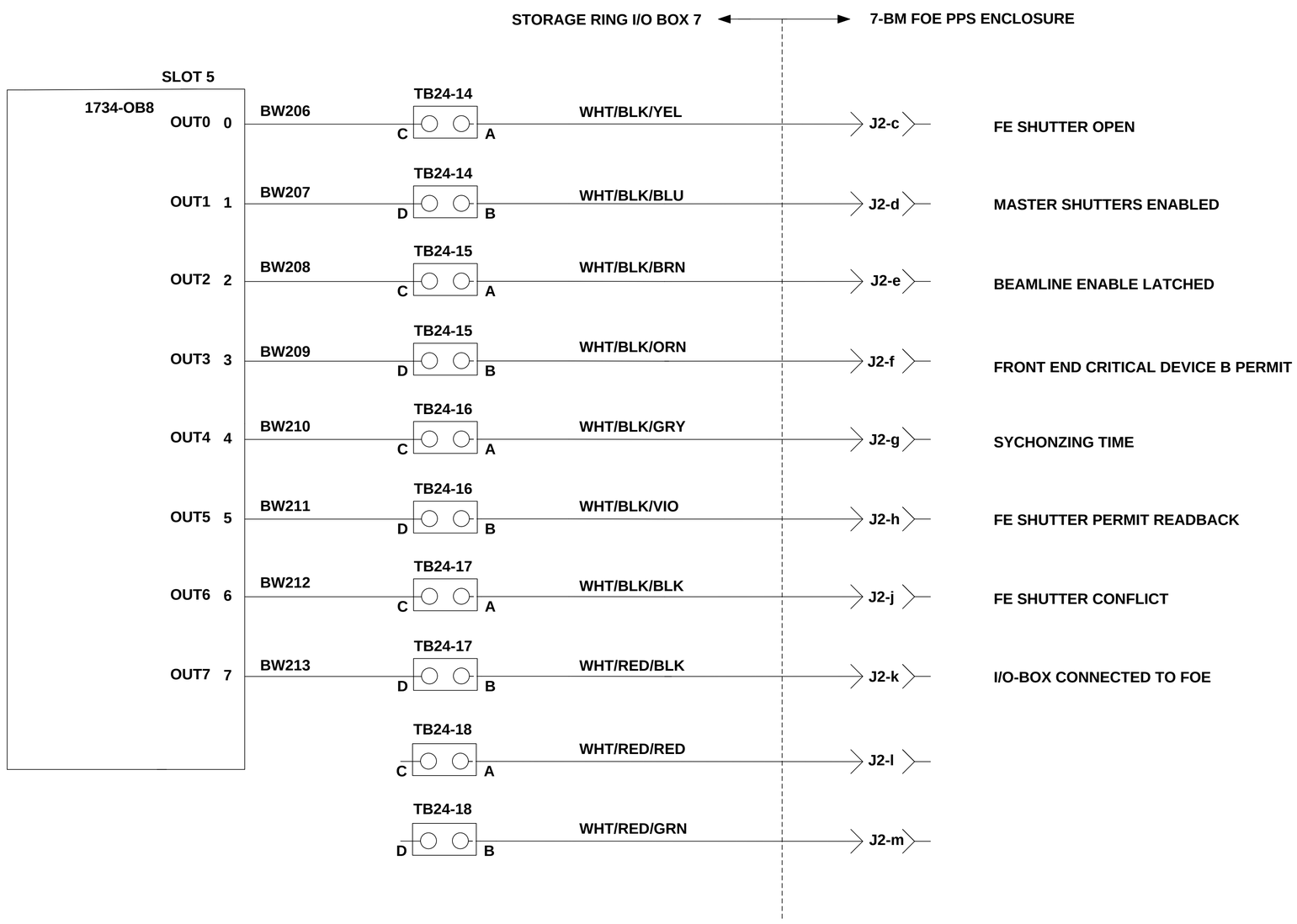

BM BEAMLINE GROUP

7-BM

B

LT-EL-SR-EI (DRAWING DIRECTORY)	LT-EL-SR-EI-PPS-0207-90 (DRAWING NUMBER)	E (REV)
COMPUTER REPRODUCABLE	SCALE: N/A	SHEET 52 OF 61

LT-EL-SR-EI-PPS-0207-90

REV	DESCRIPTION	DATE	BY	CHECKED	APP
	SEE SHEET 1				

TO :
LT-ECN-017-1795
PAGE OF

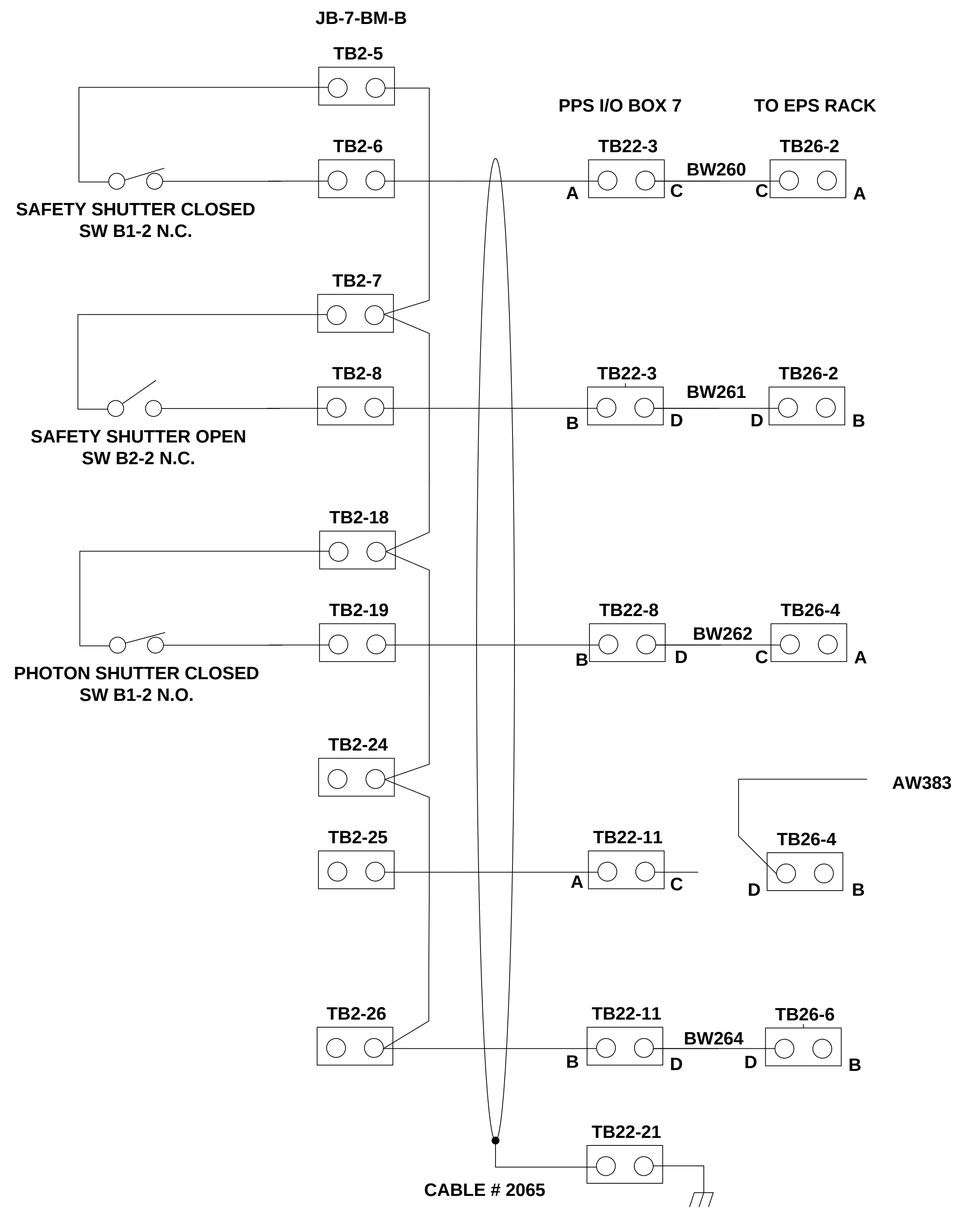

BM BEAMLINE GROUP

7-BM

B

LT-EL-SR-EI DRAWING DIRECTORY	LT-EL-SR-EI-PPS-0207-90 DRAWING NUMBER	E REV
COMPUTER REPRODUCABLE	SCALE: N/A	SHEET 53 OF 61

LT-EL-SR-EI-PPS-0207-90

REV	DESCRIPTION	DATE	BY	CHECKED	APP
	SEE SHEET 1				

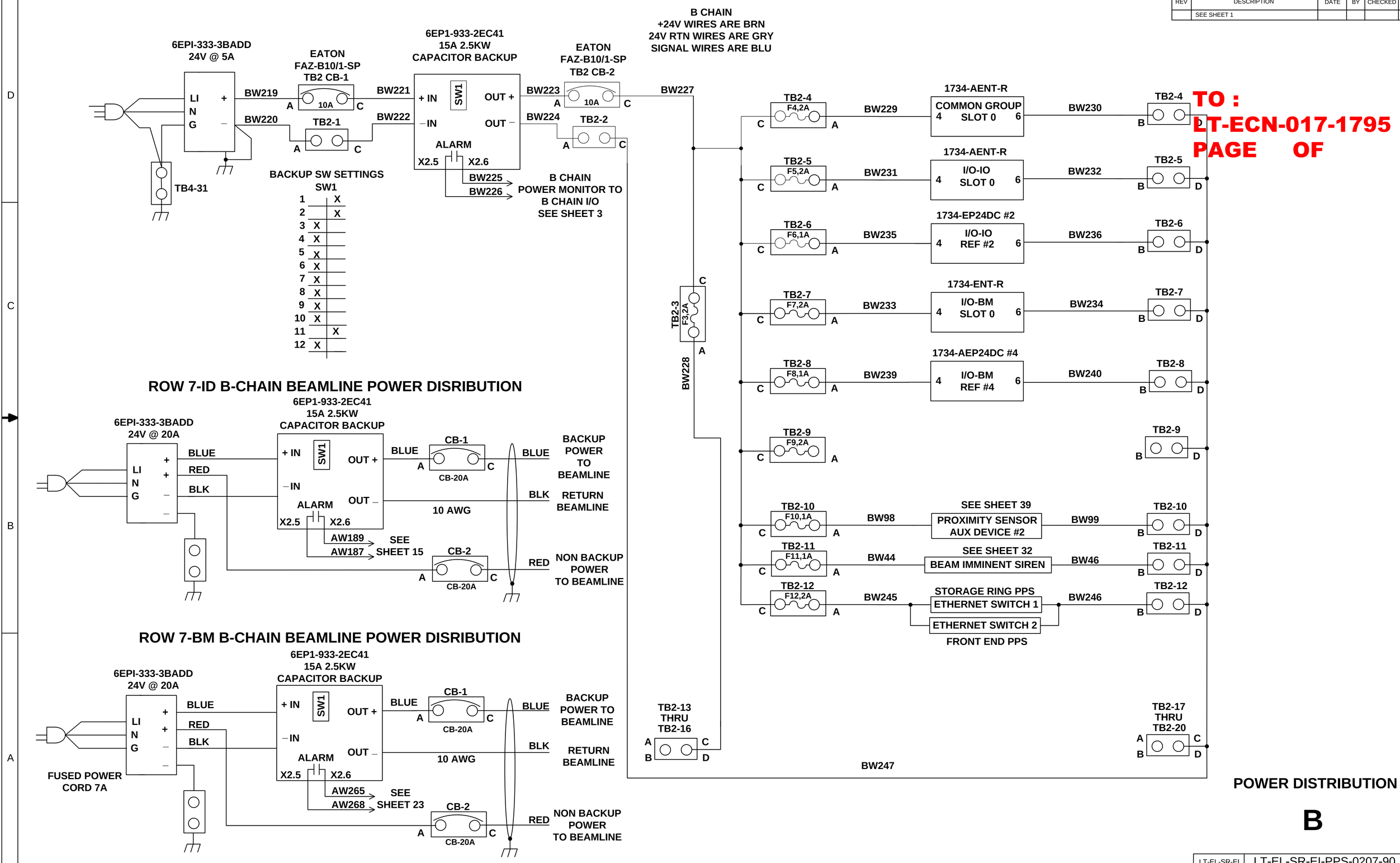

LT-EL-SR-EI	LT-EL-SR-EI-PPS-0207-90	E
DRAWING DIRECTORY	DRAWING NUMBER	REV

COMPUTER REPRODUCABLE | SCALE: N/A | SHEET 54 OF 61

LT-EL-SR-EI-PPS-0207-90

REV	DESCRIPTION	DATE	BY	CHECKED	APP
	SEE SHEET 1				

PPS I/O BOX TERMINAL LAYOUT TYPE 1

TYPE 1 I/O BOX					
ROW 1					
POWER SUPPLIES					
A CHAIN POWER SUPPLY		6EP1 333-3BA00			SIEMENS
A CHAIN CAPACITOR BACKUP		6EP1 333-2EC41			SIEMENS
HMI ETHERNER SWITCH		1783-US03T0IF			ALLEN BRADLY
STORAGE RING PPS A CHAIN ERHERNET SWITCH 1					SIEMENS
STORAGE RING SAFTEY NETWORK A CHAIN ETHERNET SWITCH 3		6GK5208-0BA10-2AA3			SIEMENS
FRONT END PPS A CHAIN ETHERNET SWITCH 2		6GK5204-2BB10-2AA3			
					SIEMENS
A CHAIN SWITCH 1		6GK5208-0B810-2AA3			
					ALLEN BRADLY
B CHAIN SWITCH 1		1783-US03T0IF			
FRONT END PPS B CHAIN ETHERNET SWITCH 2		1783-US06T0IF			ALLEN BRADLY
B CHAIN POWER SUPPLY		6EP1 333-3BA00			SIEMENS
B CHAIN CAPACITOR BACKUP		6EP1 333-2EC41			SIEMENS
ROW 2					
A CHAIN I/O					
I/O COMMON GROUP A					
SLOT	MODULE	SOCKET	SOCKET		
0	6ES7151-3BA23-0AB0	NA	PN INTERFACE MODULE IM151-3 PN		SIEMENS
1	6ES7138-4CA50-0AB0	6ES7193-4CC20-0AA0	POWER MODULE PM-E		
2	6ES7138-4FA04-0AB0	6ES7193-4CF40-0AA0	4/8FDI 8 SAFE IN		SIEMENS
3	6ES7138-4FA04-0AB0	6ES7193-4CF40-0AA0	4/8FDI 8 SAFE IN		SIEMENS
4	6ES7131-4BF00-0AB0	6ES7193-4CA40-0AA0	8DI 8 STANDARD IN		SIEMENS
5	6ES7132-4BF00-0AA0	6ES7193-4CA40-0AA0	8D0 STANDARD.OUT		SIEMENS
6	6ES7138-4FB03-0AA0	6ES7193-4CF40-0AA0	4FD0 4 SAFE OUT		SIEMENS

TO :
LT-ECN-017-1795
PAGE OF

LT-EL-SR-EI-PPS-0207-90

REV	DESCRIPTION	DATE	BY	CHECKED	APP
	SEE SHEET 1				

PPS I/O BOX TERMINAL LAYOUT TYPE 1

I/O ID GATE/LABRYNTH GROUP A				
SLOT	MODULE	SOCKET		
7	6ES7138-4CA50-0AB0	6ES7193-4CC20-0AA0	POWER MODULE PM-E	SIEMENS
8	6ES7138-4FA04-0AB0	6ES7193-4CF40-0AA0	4/8FDI 8 SAFE IN	SIEMENS
9	6ES7131-4BF00-0AA0	6ES7193-4CA40-0AA0	8DI 8 STANDARD IN	SIEMENS
10	6ES7138-4FB03-0AB0	6ES7193-4CF40-0AA0	4FD0 8 SAFE OUT	SIEMENS
11	6ES7132-4BF00 0AA0	6ES7193-4CA40-0AA0	800 8 STANDARD OUT	SIEMENS
I/O ID BEAMLINE GROUP A				
SLOT	MODULE	SOCKET		
0	6ES7151-3BA23-0AB0	NA	PN INTERFACE MODULE IM151-3 PN	SIEMENS
1	6ES7138-4CA50-0AB0	6ES7193-4CC20-0AA0	POWER MODULE PM-E	SIEMENS
2	6ES7138-4FA04-0AB0	6ES7193-4CF40-0AA0	4/8FDI 8 SAFE IN	SIEMENS
3	6ES7138-4FA04-0AB0	6ES7193-4CF40-0AA0	4/8FDI 8 SAFE IN	SIEMENS
4	6ES7131-4BF00-0AA0	6ES7193-4CA40-0AA0	8DI 8 STANDARD IN	SIEMENS
5	6ES7131-4BF00-0AA0	6ES7193-4CA40-0AA0	8DI 8 STANDARD IN	SIEMENS
6	6ES7138-4FB03-0AB0	6ES7193-4CF40-0AA0	4FD0 4 SAFE OUT	SIEMENS
7	6ES7132-4BF00-0AA0	6ES7193-4CA40-0AA0	8D0 STANDARD.OUT	SIEMENS
I/O BM BEAMLINE GROUP A				
SLOT	MODULE	SOCKET		
0	6ES7151-3BA23-0AB0	NA	PN INTERFACE MODULE IM151-3 PN	SIEMENS
1	6ES7138-4CA50-0AB0	6ES7193-4CC20-0AA0	POWER MODULE PM-E	SIEMENS
2	6ES7138-4FA04-0AB0	6ES7193-4CF40-0AA0	4/8FDI 8 SAFE IN	SIEMENS
3	6ES7138-4FA04-0AA0	6ES7193-4CF40-0AA0	4/8FDI 8 SAFE IN	SIEMENS
4	6ES7131-4BF00-0AA0	6ES7193-4CA40-0AA0	8DI 8 STANDARD IN	SIEMENS
5				
6	6ES7138-4FB03-0AB0	6ES7193-4CF40-0AA0	4FD0 4 SAFE OUT	SIEMENS
7	6ES7132-4BF00-0AA0	6ES7193-4CA40-0AA0	8D0 STANDARD.OUT	SIEMENS
TB27	4-2 COVER LARGE 3	1>6 1		
TB29	4-2 COVER LARGE 3	1>6 1	END CLAMP 5	

TO :
LT-ECN-017-1795
PAGE OF

1	3044636
2	3044092
3	3047293
4	3047303
5	1201413
6	EPDDFL4U
7	3044542
8	DDFL-4U
9	3044076
10	3047028
11	3047170

7-BM

B

LT-EL-SR-EI-PPS-0207-90

LT-EL-SR-EI (DRAWING DIRECTORY)	LT-EL-SR-EI-PPS-0207-90 (DRAWING NUMBER)	E (REV)
COMPUTER REPRODUCABLE	SCALE: N/A	SHEET 56 OF 61

REV	DESCRIPTION	DATE	BY	CHECKED	APP
	SEE SHEET 1				

PPS I/O BOX TERMINAL LAYOUT TYPE 1

ROW 3						
TB15	END CLAMP 5	4-2 COVER LARGE 3	1>20 1	4-2 COVER SMALL 4	21 2	
TB19	4-2 COVER LARGE 3	1>20 1	4-2 COVER SMALL 4	21 2		
TB21	4-2 COVER LARGE 3	1>20 1	4-2 COVER SMALL 4	21 2		
TB23	4-2 COVER LARGE 3	1>20 1	21 2			
TB25	4-2 COVER LARGE 3	1>5 1 / 6 7 / 7>15 1	16 2			
TB1	FUSE PLATE 6	1>12 8	13>21 7	END CLAMP 5	USE JUMPER STRIPS 1>12 AND 13>21	
CB1	EATON	WMZS1C05				
CB2	EATON	20A				
CB3	EATON	20A				
	KLASCHKA PROXIMITY		P/N 3514404220		ID / BM FRONT END	
TB17	END CLAMP 5	4-2 COVER LARGE	1>6 1	4-2 COVER SMALL 4	END CLAMP 5	
ROW 4						
TB3	END CLAMP 5	4-2 COVER LARGE 3	1>7 1	4-2 COVER SMALL 4	8 2	
TB5	4-2 COVER LARGE 3	1>2 1	4-2 COVER SMALL 4	FUSE PLATE 6	3 8	4 9
TB7	4-2 COVER LARGE 3	1>2 1	4-2 COVER SMALL 4	FUSE PLATE 6	3 8	4 9
TB9	4-2 COVER LARGE 3	1>3 1	4-2 COVER SMALL 4	4 2		
TB11	4-2 COVER LARGE 3	1>3 1	4-2 COVER SMALL 4	4 2		
TB13	4-2 COVER LARGE 3	1>17 1	4-2 COVER SMALL 4	18 2	END CLAMP 5	

RELAY	MODULE	SOCKET	
K1	ALTECH 5669	SOCKET SCHRACK RT 78626	A CHAIN HII BEAM IMMINENT SIREN PERMIT
K3	ALTECH 5669	SOCKET SCHRACK RT 78626	A CHAIN HII BEAM IMMINENT BEACON PERMIT
K5	ELESTA SIM3	ELESTA SRD-SIM4	ID PHOTON SHUTTER OPEN FAN OUT RELAY

TO :
LT-ECN-017-1795
PAGE OF

1	3044636
2	3044092
3	3047293
4	3047303
5	1201413
6	EPDDFL4U
7	3044542
8	DDFL-4U
9	3044076
10	3047028
11	3047170

LT-EL-SR-EI-PPS-0207-90

LT-EL-SR-EI (DRAWING DIRECTORY)	LT-EL-SR-EI-PPS-0207-90 (DRAWING NUMBER)	E (REV)
COMPUTER REPRODUCABLE	SCALE: N/A	SHEET 57 OF 61

REV	DESCRIPTION	DATE	BY	CHECKED	APP
	SEE SHEET 1				

TO :
LT-ECN-017-1795
PAGE OF

RELAY	MODULE	SOCKET	
K7	ALTECH 5669	SOCKET SCHRACK RT 78626	A CHAIN ACCESS PERMIT RELAY
K9	ALTECH 5669	SOCKET SCHRACK RT 78626	A CHAIN LOCK PERMIT
K11	ALTECH 5669	SOCKET SCHRACK RT 78626	A CHAIN ID MASTER SHUTTER RELAY
K13	ELESTA SIM3	SOCKET ELESTA SRD-SIM4	BM PHOTON SHUTTER OPEN FAN OUT RELAY
K15	ALTECH 5669	SOCKET SCHRACK RT 78626	ID REQUEST TO CLOSE SHUTTERS
K17	ALTECH 5669	SOCKET SCHRACK RT 78626	BM REQUEST TO CLOSE SHUTTERS
K19	ALTECH 5669	SOCKET SCHRACK RT 78626	ID SAFETY SHUTTER OVER TEMP,PHOTON SHUTTER INTERLOCK A CHAIN
K21	ALTECH 5669	SOCKET SCHRACK RT 78626	BM SAFETY SHUTTER OVER TEMP,PHOTON SHUTTER INTERLOCK A CHAIN
K12	ELESTA SRG282Z	SOCKET SCHRACK RT 78626	ID SAFETY SHUTTER OVER TEMP,PHOTON SHUTTER INTERLOCK B CHAIN
K14	ELESTA SRG282Z	SOCKET SCHRACK RT 78626	BM SAFETY SHUTTER OVER TEMP,PHOTON SHUTTER INTERLOCK B CHAIN
K2	ELESTA SRG282Z	SOCKET SCHRACK RT 78626	B CHAIN HII BEAM IMMINENT SIREN PERMIT
K4	ELESTA SRG282Z	SOCKET SCHRACK RT 78626	B CHAIN HII BEAM IMMINENT BEACON PERMIT
K6	ELESTA SRG282Z	SOCKET SCHRACK RT 78626	B CHAIN AREA SAFE SIGN PERMIT
K10	ELESTA SRG282Z	SOCKET SCHRACK RT 78626	B CHAIN DOOR LOCK PERMIT

TB4	END CLAMP 5	4-2 COVER LARGE 3	1>10 1	4-2 COVER SMALL 4	11 2
TB6	4-2 COVER LARGE 3	1>3 1	4-2 COVER SMALL 4	4 2	
TB8	4-2 COVER LARGE 3	1>3 1	4-2 COVER SMALL 4	4 2	
TB12	4-2 COVER LARGE 3	1>9 1	4-2 COVER SMALL 4	10 2	END CLAMP 5

1	3044636
2	3044092
3	3047293
4	3047303
5	1201413
6	EPDDFL4U
7	3044542
8	DDFL-4U
9	3044076
10	3047028
11	3047170

LT-EL-SR-EI-PPS-0207-90

LT-EL-SR-EI (DRAWING DIRECTORY)	LT-EL-SR-EI-PPS-0207-90 (DRAWING NUMBER)	E (REV)
COMPUTER REPRODUCABLE	SCALE: N/A	SHEET 58 OF 61

REV	DESCRIPTION	DATE	BY	CHECKED	APP
	SEE SHEET 1				

PPS I/O BOX TERMINAL LAYOUT TYPE 1

TO :
LT-ECN-017-1795
PAGE OF

ROW 5					
B CHAIN I/O					
A CHAIN FRONT END PPS	MIPP/AD/IT IP ST		FIBER OPTIC SPLICE BOX TO COMPUTER ROOM		HIRSCHMANN
I/O COMMON GROUP B					
SLOT	MODULE	SOCKET (QTY)			
0	1734-AENTR		24V DC ETHERNET ADAPTER		AB
1	1734-IB8S	1734-TOP3 (2)	AB INPUT F 8 SAFETY IN		AB
2	1734-IB8	1734-TB	AB INPUT STANDARD 8 STANDARD IN		AB
3	1734-OB8E	1734-TB	8 CHANNEL STANDARD OUT		AB
4	1734-OW4	1734-TB	RELAY MODULE 4 OUTPUT		AB
5	1734-IB8S	1734-TOP3 (2)	AB INPUT F 8 SAFETY OUT		AB
I/O GATE/LABYRINTH GROUP B					
6	1734-IB8S	1734-TOP3 (2)	AB INPUT F 8 SAFETY IN		AB
7	1734-IB8S	1734-TB	AB INPUT STANDARD 8 STAND OVRD IN		AB
8	1734-OW4	1734-TB	RELAY MOD OUT		AB
9	1734-0B8S	1734-TB	AB INPUT F 8 SAFETY IN		AB
I/O ID BEAMLINE GROUP B					
SLOT	MODULE	SOCKET			
0	1734-AENTR		24V DC ETHERNET ADAPTER		AB
1	1734-IB8S	1734-TOP3 (2)	AB INPUT F 8 SAFETY IN		AB
2	1734-IB8S	1734-TOP3 (2)	AB INPUT F 8 SAFETY IN		AB
3	1734-IB8S	1734-TB	AB INPUT STANDARD 8 STANDARD IN		AB
4	1734-IB8S	1734-TB	AB INPUT STANDARD 8 STANDARD IN		AB
5	1734-IB8S	1734-TOP3	8 SAFETY OUT		AB
6	1734-OB8	1734-TB (2)	8 CHANNEL STANDARD OUT		AB
I/O BM BEAMLINE GROUP B					
SLOT	MODULE	SOCKET			
0	1734-AENTR		24V DC ETHERNET ADAPTER		AB
1	1734-IB8S	1734-TOP3 (2)	AB INPUT F 8 SAFETY IN		AB
2	1734-IB8S	1734-TOP3 (2)	AB INPUT F 8 SAFETY IN		AB
3	1734-IB8S	1734-TB	AB INPUT STANDARD 8 STANDARD IN		AB
4	1734-OB8S	1734-TOP3 (2)	8 SAFETY OUT		AB
5	1734-OB8	1734-TB	8 CHANNEL STANDARD OUT		AB
TB28	4-2 COVER LARGE 3	1>2 1	4-2 COVER SMALL 4		
TB30	4-2 COVER LARGE 3	1>2 1	4-2 COVER SMALL 4	END CLAMP 5	
B CHAIN FRONT END PPS	MIPP/AD/IL LP LC		FIBER OPTIC SPLICE BOX TO COMPUTER ROOM		HIRSCHMANN

1	3044636
2	3044092
3	3047293
4	3047303
5	1201413
6	EPDDFL4U
7	3044542
8	DDFL-4U
9	3044076
10	3047028
11	3047170

LT-EL-SR-EI-PPS-0207-90

LT-EL-SR-EI (DRAWING DIRECTORY)	LT-EL-SR-EI-PPS-0207-90 (DRAWING NUMBER)	E (REV)
COMPUTER REPRODUCABLE	SCALE: N/A	SHEET 59 OF 61

REV	DESCRIPTION	DATE	BY	CHECKED	APP
	SEE SHEET 1				

PPS I/O BOX TERMINAL LAYOUT TYPE 1

ROW 6					
TB16	END CLAMP 5	4-2 COVER LARGE 3	1>20 1	4-2 COVER SMALL 4	21 2
TB20	4-2 COVER LARGE 3	1>20 1	4-2 COVER SMALL 4	21 2	
TB22	4-2 COVER LARGE 3	1>20 1	4-2 COVER SMALL 4	21 2	
TB24	4-2 COVER LARGE 3	1>20 1	4-2 COVER SMALL 4	21 2	
TB26	4-2 COVER LARGE 3	1>5 1 / 6 7 / 7>15 1	4-2 COVER SMALL 4	21 2	
TB2	FUSE PLATE 6	1>12 8	13>21 7	END CLAMP 5	USE BUSS JUMPER STRIPS 1>12 & 13>21
CB1	EATON	20A			
CB2	EATON	20A			
	KLASCHKA PROXIMITY		P/N 3514404220		ID / BM FRONT END
TB18	END CLAMP 5	4-2 COVER LARGE 3	1>6 1	4-2 COVER SMALL 4	END CLAMP 5

TO :
LT-ECN-017-1795
PAGE OF

1	3044636
2	3044092
3	3047293
4	3047303
5	1201413
6	EPDDFL4U
7	3044542
8	DDFL-4U
9	3044076
10	3047028
11	3047170

LT-EL-SR-EI-PPS-0207-90

LT-EL-SR-EI (DRAWING DIRECTORY)	LT-EL-SR-EI-PPS-0207-90 (DRAWING NUMBER)	E (REV)
COMPUTER REPRODUCABLE	SCALE: N/A	SHEET 60 OF 61

REV	DESCRIPTION	DATE	BY	CHECKED	APP
	SEE SHEET 1				

TO :
LT-ECN-017-1795
PAGE OF

PPS I/O BOX TERMINAL LAYOUT TYPE 1

ROW 7					
POWER SUPPLIES					
A CHAIN ID BEAMLINE POWER SUPPLY		6EP1 333-3BADD			SIEMENS
A CHAIN ID CAPACITOR BACKUP		6EP1 333-2EC41			SIEMENS
BL P.S. CIRCUIT BREAKER		20A			EATON
BL CAP BACKUP CIRCUIT BREAKER		20A			EATON
A CHAIN BM BEAMLINE POWER SUPPLY		6EP1 333-3BADD			SIEMENS
A CHAIN BM CAPACITOR BACKUP		6EP1 333-2EC41			SIEMENS
BL P.S. CIRCUIT BREAKER		20A			EATON
BL CAP BACKUP CIRCUIT BREAKER		20A			EATON
B CHAIN ID BEAMLINEPOWER SUPPLY		6EP1 333-3BADD			SIEMENS
B CHAIN ID CAPACITOR BACKUP		6EP1 333-2EC41			SIEMENS
BL P.S. CIRCUIT BREAKER		20A			EATON
BL CAP BACKUP CIRCUIT BREAKER		20A			EATON
B CHAIN BM BEAMLINE POWER SUPPLY		6EP1 333-3BADD			SIEMENS
B CHAIN BM CAPACITOR BACKUP		6EP1 333-2EC41			SIEMENS
BL P.S. CIRCUIT BREAKER		20A			EATON
BL CAP BACKUP CIRCUIT BREAKER		20A			EATON

LT-EL-SR-EI-PPS-0207-90

LT-EL-SR-EI (DRAWING DIRECTORY)	LT-EL-SR-EI-PPS-0207-90 (DRAWING NUMBER)	E (REV)
COMPUTER REPRODUCABLE	SCALE: N/A	SHEET 61 OF 61

NSLS-II Beamline 7-BM Radiological Interlock Test Checklist

Test Reason: Initial Test	Test Result: ☑ Passed ☐ Failed Test Type: ☐Pre-Certification ☑Certification ☐ Partial
Test Date: 6/19/2017	Start Time: Finish Time:
Tester 1: Thomas McDonald; Brian Heneveld	Assistant 1: Accelerator Division Operations
Tester 2: Robert Chmiel ; Gabrielle Stare	Assistant 2:
Tester 1 Signature: Thomas P McDonald	Tester 2 Signature: [illegible]
*Reviewer 1:	Reviewer 1 Signature:
Reviewer 2:	Reviewer 2 Signature:
** Safety Signature 7-BM (Beamline HMI) A Chain: CB76 139A B Chain: EDD6 7C3F	Previous 7-BM SS# Date: / / A Chain: B Chain:
** Safety Signature Pentant 3: Beamline (SR HMI) A Chain: E39A 2A12 B Chain: D9B1 829E	Previous Pentant 3 SS# Date: / / A Chain: B Chain:

* A review by an Accelerator Safety Systems Engineer and a designated specialist (Reviewer 2) is only required upon a Test failure.
**If Current Safety Signature number (found in top left corner on HMI) is different from previous number, contact the Accelerator Safety Systems Cognizant Engineer.

PREPARATION:

I. All hutch door switches have been evaluated by NSLS-II Engineering for proper positioning	✓
II. Inform Control Room Lead Operator that testing will be done	✓
III. Obtain Beamline enable and PPS reset keys from Control Room	✓
IV. Verify that beamline vacuum and water interlocks are satisfied	✓
V. Place muffler on beam imminent sounder	✓
VI. Request Lead Operator enable Master Shutters	✓

A1 ***Verify System Lockouts***

Gun HVPS Enable Switch ✓

Linac modulator line cords (3) OR Booster Dipole F PS 480 V ✓

Booster RF HVPS 480 V OR Booster low level RF drive termination ✓

SR System C low level RF drive termination OR SR System C RF output connection to cavity ✓

SR System D low level RF drive termination OR SR System D RF output connection to cavity ✓

A2 ***Verify Search and Time Beam Imminent Alarm***

Verify that search path is free from obstacles and line of sight is clear in search mirrors in accordance with PS-C-XFD-PRC-010, *Beamline Enclosure Search and Secure and Breaking Security Procedure* ✓

Repeat steps for each 7-BM hutch.	A	B	C
Close all doors except the main door	✓	✓	✓
"Entry Permitted" sign is ON	✓	✓	✓
Using the keypad, lock the closed doors	✓	✓	✓
Press SB1	✓	✓	✓
SB1 illuminates	✓	✓	✓
Search sounder sounds	✓	✓	✓
Search yellow beacon flashing	✓	✓	✓
Press SB2	✓	✓	✓
SB2 illuminates	✓	✓	✓
Exit hutch and close main door	✓	✓	✓
Press SBE and ***begin timing***	✓	✓	✓
Beam imminent alarm sounds for 30 seconds	✓	✓	✓
After warning, (FOE, B, C) Interlocked A and B ON (**green**), HMI	✓	✓	✓
"Interlocked" sign is ON	✓	✓	✓
Maglock A and B ON (**green**) all doors, HMI	✓	✓	✓
Press the SBE/Access Button	✓	✓	✓
"Interlocked" sign is OFF, "Entry Permitted" sign is ON	✓	✓	✓
FOE, B, C Interlocked A and B OFF, HMI	✓	✓	✓
Maglock A OFF (may require opening Maglock on keypad)	✓	✓	✓
Open door	✓	✓	✓
Door opens, Maglock B OFF	✓	✓	✓

A3 ***Out of Sequence Search in the FOE (A Hutch), B Hutch and C Hutch***

Repeat steps for each 7-BM hutch.	A	B	C
Press SB2	✓	✓	✓
SB2 does not illuminate	✓	✓	✓
Press SB1	✓	✓	✓

SB1 illuminates	✓	✓	✓
Close hutch door and press SBE	✓	✓	✓
Hutch does NOT secure	✓	✓	✓

A4 ***Search Timeout***

Repeat steps for each 7-BM hutch.	**A**	**B**	**C**
*Press first search button and **begin timing***	✓	✓	✓
*Complete search **without pressing Final Search button***	✓	✓	✓
Search sounders off in 2 minutes	✓	✓	✓
Press Final Search button	✓	✓	✓
Search does not complete	✓	✓	

A5 ***Shutter Enable***

Place actuators on FOE door switches and attach Maglock devices		✓
	Beamline Online A and B OFF	✓
Enable beamline with key and perform a reset	Beamline Online A and B ON (**green**)	✓
Search the FOE	FE Shutter Permits A and B ON ***after*** Beam Imminent Warning	✓
Open FE Shutters	FE Shutters A and B indicate open (**green**)	✓
	"Beam On" sign is ON	✓
Close FE Shutters	FE Shutters A and B indicate closed (**red**)	✓
	"Beam On" sign is OFF	✓

A6 ***Emergency Stops (ES) FOE (A Hutch)***

For each ES search FOE hutch.	**ES1**	**ES2**	**ES3**
Open FE Shutters from keypad	✓	✓	✓
FE Shutters A and B open (**green**)	✓	✓	✓
FOE Interlocked A and B ON (**green**)	✓	✓	✓
FE Shutter Permits A and B ON (**green**)	✓	✓	✓
FE Critical Device Permits A and B ON	✓	✓	✓
Right Maglock A and B ON (**green**)	✓	✓	✓

Left Maglock A and B ON (**green**)	✓	✓	✓
Press ES	✓	✓	✓
FE Shutters A and B closed (**red**)	✓	✓	✓
FOE Interlocked A and B OFF	✓	✓	✓
FE Shutter Permits A and B OFF	✓	✓	✓
FE Critical Device Permits A and B OFF	✓	✓	✓
Right Maglock A OFF	✓	✓	✓
Left Maglock A OFF	✓	✓	✓
Pull out ES	✓	✓	✓
ES Sum Latch OFF	✓	✓	✓
Reset fault	✓	✓	✓
ES Sum Latch ON (**green**)	✓	✓	✓

A7 ***Emergency Stops (ES) B Hutch***

For each ES search hutch, Beam Stop is closed.	ES1	ES2
Open FE Shutters and L1S1 Shutter from keypad	✓	✓
All Shutters A and B open (**green**)	✓	✓
B Interlocked A and B ON (**green**)	✓	✓
L1S1 Shutter Permit A and B ON (**green**)	✓	✓
FE Critical Device Permits A and B ON	✓	✓
Front Maglock A and B ON (**green**)	✓	✓
Press ES	✓	✓
L1S1 Shutter A and B closed (**red**)	✓	✓
B Interlocked A and B OFF	✓	✓
L1S1 Shutter Permit A and B OFF	✓	✓
FE Critical Device Permits A and B OFF	✓	✓
Front Maglock A OFF	✓	✓

Pull out ES	✓	✓
ES Sum Latch OFF	✓	✓
Reset fault	✓	✓
ES Sum Latch ON (**green**)	✓	✓

A8 ***Emergency Stops (ES) C Hutch***

For each ES search hutch, Beam Stop is open.	ES1	ES2
Open FE Shutters and L1S1 Shutter from keypad	✓	✓
All Shutters A and B open (**green**)	✓	✓
C Interlocked A and B ON (**green**)	✓	✓
L1S1 Shutter Permit A and B ON (**green**)	✓	✓
FE Critical Device Permits A and B ON	✓	✓
Front Maglock A and B ON (**green**)	✓	✓
Press ES	✓	✓
L1S1 Shutter A and B closed (**red**)	✓	✓
C Interlocked A and B OFF	✓	✓
L1S1 Shutter Permit A and B OFF	✓	✓
FE Critical Device Permits A and B OFF	✓	✓
Front Maglock A OFF	✓	✓
Pull out ES	✓	✓
ES Sum Latch OFF	✓	✓
Reset fault	✓	✓
ES Sum Latch ON (**green**)	✓	✓

A9 ***B Hutch Labyrinth 1 Switches and Latches***

Place actuators on the labyrinth switches/latches and downstream left door switches and Maglock. ✓

Check the corresponding Permits for each switch tested (e.g., A Permit for switch A1).

Beam Stop is closed.	A	B	Latch
Search hutch	✓	✓	✓
Open FE Shutters and LIS1 Shutter from keypad	✓	✓	✓
All Shutters A and B open (**green**)	✓	✓	✓
B Interlocked A and B ON (**green**)	✓	✓	✓
L1S1 Shutter Permit A and B ON (**green**)	✓	✓	✓

Cable Lab 1 Switches/Latch A and B ON (**green**)	✓	✓	✓
FE Critical Device Permits A and B ON	✓	✓	✓
Remove one switch actuator	✓	✓	✓
L1S1 Shutter A and B closed (**red**)	✓	✓	✓
B Interlocked OFF	✓	✓	✓
L1S1 Shutter Permit OFF	✓	✓	✓
Cable Lab 1 Switch/Latch Permit OFF	✓	✓	✓
FE Critical Device Permits A and B OFF	✓	✓	✓
Replace switch actuator and reset fault	✓	✓	✓

Remove labyrinth actuators and close labyrinth door ✓

A10 ***FOE Right Door Switches***

Place actuators on the door switches and Maglock. ✓

Check the corresponding Permits for each switch tested (e.g., A Permit for switch A1).

	A	B	Reed
Search hutch	✓	✓	✓
Open FE Shutters from keypad	✓	✓	✓
FE Shutters A and B open (**green**)	✓	✓	✓
FOE Interlocked A and B ON (**green**)	✓	✓	✓
FE Shutter Permits A and B ON (**green**)	✓	✓	✓
FOE Door Switch Sum A and B ON (**green**)	✓	✓	✓
FE Critical Device Permits A and B ON	✓	✓	✓
Remove one switch actuator	✓	✓	✓
FE Shutters A and B closed (**red**)	✓	✓	✓
FOE Interlocked OFF	✓	✓	✓
FE Shutter Permit OFF	✓	✓	✓
FOE Door Switch Sum OFF	✓	✓	✓
FE Critical Device Permits A and B OFF	✓	✓	✓
Replace switch actuator and reset fault	✓	✓	✓

Remove actuators and close door ✓

A11 ***FOE Left Door Switches***

Place actuators on the door switches and Maglock. ✓

Check the corresponding Permits for each switch tested (e.g., A Permit for switch A).

	A	B	Reed
Search hutch	✓	✓	✓
Open FE Shutters from keypad	✓	✓	✓
FE Shutters A and B open (**green**)	✓	✓	✓
FOE Interlocked A and B ON (**green**)	✓	✓	✓
FE Shutter Permits A and B ON (**green**)	✓	✓	✓
FOE Door Switch Sum A and B ON (**green**)	✓	✓	✓
FE Critical Device Permits A and B ON	✓	✓	✓
Remove one switch actuator	✓	✓	✓
FE Shutters A and B closed (**red**)	✓	✓	✓
FOE Interlocked OFF	✓	✓	✓
FE Shutter Permit OFF	✓	✓	✓
FOE Door Switch Sum OFF	✓	✓	✓
FE Critical Device Permits A and B OFF	✓	✓	✓
Replace switch actuator and reset fault	✓	✓	✓

Remove actuators and close door ✓

A12 ***B hutch Front Door Switches***

Place actuators on the door switches and Maglock. ✓

Check the corresponding Permits for each switch tested (e.g., A Permit for switch A).

Beam Stop closed.

	A	B	Reed
Search hutch	✓	✓	✓
Open FE Shutters and L1S1 Shutter from keypad	✓	✓	✓
All Shutters A and B open (**green**)	✓	✓	✓
B Interlocked A and B ON (**green**)	✓	✓	✓
L1S1 Shutter Permit A and B ON (**green**)	✓	✓	✓
B Door Switch Sum A and B ON (**green**)	✓	✓	✓
FE Critical Device Permits A and B ON	✓	✓	✓

Remove one switch actuator	✓	✓	✓
L1S1 Shutter A and B closed (**red**)	✓	✓	✓
B Interlocked OFF	✓	✓	✓
L1S1 Shutter Permit OFF	✓	✓	✓
B Door Switch Sum OFF	✓	✓	✓
FE Critical Device Permits A and B OFF	✓	✓	✓
Replace switch actuator and reset fault	✓	✓	✓

Remove actuators and close door ✓

A13 ***Beam Stop Switches***

Place actuators on the Beam Stop switches and latch. ✓

Check the corresponding Permits for each switch tested (e.g., A Permit for switch A).

	A	B	Latch
Search hutch	✓	✓	✓
Open FE Shuters and L1S1 Shutter from keypad	✓	✓	✓
All Shutters A and B open (**green**)	✓	✓	✓
Beam Stop indicates closed (**red**)	✓	✓	✓
L1S1 Shutter Permit A and B ON (**green**)	✓	✓	✓
FE Critical Device Permits A and B ON	✓	✓	✓
Remove one switch actuator	✓	✓	✓
L1S1 Shutter A and B closed (**red**)	✓	✓	✓
Beam Stop does NOT indicate closed	✓	✓	✓
L1S1 Shutter Permit OFF	✓	✓	✓
FE Critical Device Permits A and B OFF	✓	✓	✓
Replace switch actuator and reset fault	✓	✓	✓

Remove actuators ✓

A14 ***C Hutch Front Door Switches***

Place actuators on the door switches and Maglock. ✓

Check the corresponding Permits for each switch tested (e.g., A Permit for switch A).

	A	B	Reed	
Beam Stop is open.				
Search hutch	✓	✓	✓	
Open FE Shutters and L1S1 Shutter from keypad	✓	✓	✓	
All Shutters A and B open (**green**)	✓	✓	✓	
C Interlocked A and B ON (**green**)	✓	✓	✓	
L1S1 Shutter Permit A and B ON (**green**)	✓	✓	✓	
C Door Switch Sum A and B ON (**green**)	✓	✓	✓	
FE Critical Device Permits A and B ON	✓	✓	✓	
Remove one switch actuator	✓	✓	✓	
L1S1 Shutter A and B closed (**red**)	✓	✓	✓	
C Interlocked OFF	✓	✓	✓	
L1S1 Shutter Permit OFF	✓	✓	✓	
C Door Switch Sum OFF	✓	✓	✓	
FE Critical Device Permits A and B OFF	✓	✓	✓	
Replace switch actuator and reset fault	✓	✓	✓	
Remove actuators,close Beam Stop and close door				✓

A15 ***Magnetic Lock Test (FOE)***

Connect the FOE test box to the PPS cabinet. Use the box to turn ON the Maglocks (set switches to "Normal"). ✓

Repeat steps for each door: Right (R) and Left (L)

	R	L
Search hutch	✓	✓
FOE Interlocked A and B ON (**green**)	✓	✓
FE Shutter Permits A and B ON (**green**)	✓	✓
Door Maglock A and B ON (**green**)	✓	✓
Open FE Shutters	✓	✓
FE Shutters open (**green**)	✓	✓
Using FOE test box, turn OFF Maglock	✓	✓
Door Maglock A OFF	✓	✓
FE Shutters closed (**red**)	✓	✓
FOE Interlocked A OFF	✓	✓

FE Shutter Permit A OFF	✓	✓
Turn On Maglock and reset fault	✓	✓
Search hutch	✓	✓
Using FE Shutter test fixture, Open FE Shutters	✓	✓
FE Crtical Device Permits A and B ON	✓	✓
Using FOE test box, turn OFF Maglock	✓	✓
Within 3 seconds:		
FE Critical Device Permit A chain OFF	✓	✓
Close FE Shutters and reset fault	✓	✓

Disconnect FOE test box ✓

A16 ***Magnetic Lock Test (B Hutch)***

Connect the FOE test box to the PPS cabinet. Use the box to turn ON the Maglocks (set switches to "Normal"). ✓

Beam Stop is closed.

	FR
Search hutch	✓
B Interlocked A and B ON (**green**)	✓
L1S1 Shutter Permit A and B ON (**green**)	✓
Door Maglock A and B ON (**green**)	✓
Open FE Shutters and L1S1 Shutter	✓
All Shutters open (**green**)	✓
Using FOE test box, turn OFF Maglock	✓
Door Maglock A OFF	✓
L1S1 Shutter closed (**red**)	✓
B Interlocked A OFF	✓
L1S1 Shutter Permit A OFF	✓
Turn On Maglock and reset fault	✓
Search hutch	✓
Using FE Shutter test fixture, Open FE Shutters and L1S1 Shutter	✓
FE Critical Device Permits A and B ON	✓
Using FOE test box, turn OFF Maglock	✓

Within 3 seconds:

FE Critical Device Permit A chain OFF ✓

Close FE Shutters and reset fault ✓

Disconnect FOE test box ✓

A17 ***Magnetic Lock Test (C Hutch)***

Connect the FOE test box to the PPS cabinet. Use the box to turn ON the Maglocks (set switches to "Normal"). ✓

Beam Stop is open.

	FR
Search hutch	✓
C Interlocked A and B ON (**green**)	✓
L1S1 Shutter Permit A and B ON (**green**)	✓
Door Maglock A and B ON (**green**)	✓
Open FE Shutters and L1S1 Shutter	✓
All Shutters open (**green**)	✓
Using FOE test box, turn OFF Maglock	✓
Door Maglock A OFF	✓
L1S1 Shutter closed (**red**)	✓
C Interlocked A OFF	✓
L1S1 Shutter Permit A OFF	✓
Turn On Maglock and reset fault	✓
Search hutch	✓
Using FE Shutter test fixture, Open FE Shutters and L1S1 Shutter	✓
FE Critical Device Permits A and B ON	✓
Using FOE test box, turn OFF Maglock	✓
Within 3 seconds:	✓
FE Critical Device Permit A chain OFF	✓
Close FE Shutters and reset fault	✓

Disconnect FOE test box ✓

A18 ***Observe Beamline Photon Shutter Operation***

Close Beamline Photon Shutter		✓
	Shutter indicates closed A and B (**red**), HMI	✓
Open Beamline Photon Shutter		✓
	Shutter opens smoothly without hesitation	✓
	Shutter indicates open A and B (**green**), HMI	✓
Close Beamline Photon Shutter		✓
	Shutter indicates closed A and B (**red**), HMI	✓

A19 ***Observe FE Safety Shutter(s) Operation***

With Maintenance Door open, connect FE Shutter test fixture.		✓
	Shutters are in the closed (down) position	✓
	FE Shutters A and B closed (**red**), HMI	✓
Turn the "Air" switch ON		✓
Open FE SSs A and B and Photon Shutter	Shutters open freely without hesitation	✓
	Shutters are in the open (up) position	✓
	FE Shutters A and B open (**green**), HMI	✓
Actuate Shutters closed	FE Shutters A and B closed (**red**), HMI	✓

A20 ***FE Safety Shutters can only be Closed if FE Photon Shutter is Closed***

Search hutch	FOE Interlocked A and B ON (**green**), HMI	✓
	FE Critical Device Permits A and B ON (**green**), HMI	✓
Open FE SSA	SSA open	✓
Open FE Photon Shutter	FE Critical Device Permits A and B OFF, HMI	✓
Close Shutters		✓
Reset fault	FE Critical Device Permits A and B ON (**green**), HMI	✓
Open FE SSB	SSB open	✓
Open FE Photon Shutter	FE Critical Device Permits A and B OFF, HMI	✓
Close Shutters		✓
Reset fault	FE Critical Device Permits A and B ON (**green**), HMI	✓

A21 ***Beamline Enable Key (Opening Shutter Without Key Trips SR RF and Dipole PS)***

Remove beamline enable key	Beamline Online A and B OFF	✓
Search FOE	FOE Interlocked A and B ON (**green**), HMI	✓
	FE Critical Device Permits A and B ON (**green**), HMI	✓
Using FE Shutter test fixture, Open FE Shutters	FE Critical Device Permits A and B OFF	✓
Using FE Shutter test fixture, Close FE Shutters		✓
Replace beamline enable key and reset faults	Beamline Online A and B ON (**green**)	✓

Live Testing

A22 ***Reach Back FOE Door Switches***

Secure P1 through P5	SR Secure, A and B chain, SR HMI	✓
Place actuators on FOE hutch door switches and Maglock		✓
Search hutch	FOE Interlocked A and B ON (**green**), HMI	✓
	FE Critical Device Permits A and B ON (**green**), HMI	✓
Check Control Room SR HMI (Beamline Page)	FE Critical Device Permit A and B ON (**green**), SR HMI	✓
Check I/O Box 7BM Beamline Enable Panel	FE Critical Device Permits A and B LEDs ON	✓
Check I/O Box 28 Beamline Enable Panel	FE Critical Device Permit Sum A and B LEDs ON	✓
Check Dipole PS (positive) Beamline Interface	A and B Permits ON, Dipole PS Pos. Interface	✓
Check Dipole PS (negative) Beamline Interface	A and B Permits ON, Dipole PS Neg. Interface	✓
Check SR RF System C HVPS Beamline Interface	A and B Permits ON, SR RF System C HVPS Interface	✓
Check SR RF System D HVPS Beamline Interface	A and B Permits ON, SR RF System D HVPS Interface	✓
Operator enables SR Dipole PS	SR Dipole PS is ON	✓
Operator enables SR RF System C HVPS	SR RF System C HVPS is ON	✓
Operator enables SR RF System D HVPS	SR RF System D HVPS is ON	✓
Using FE Shutter test fixture, open the FE Shutters (SSA, SSB and Photon)		✓
	FE Shutters open	✓
*Remove an "**A chain**" door switch actuator from beamline hutch door*		✓
	FOE Interlocked A OFF, HMI	✓
	FE Critical Device Permit A OFF, HMI	✓
Check I/O Box 7BM Beamline Enable Panel	FE Critical Device Permit A LED OFF	✓
Check I/O Box 28 Beamline Enable Panel	FE Critical Device Permit Sum A LED OFF	✓
Check Control Room SR HMI (Beamline Page)	FE Critical Device Permit A OFF (**red**), SR HMI	✓

Check SR RF System C HVPS Beamline Interface	A Permit OFF, SR RF System C HVPS Interface	√
Check SR RF System D HVPS Beamline Interface	A Permit OFF, SR RF System D HVPS Interface	√
Check Dipole PS (positive) Beamline Interface	A Permit OFF, Dipole PS Pos. Interface	√
Check Dipole PS (negative) Beamline Interface	A Permit OFF, Dipole PS Neg. Interface	√
	SR RF System C HVPS is OFF	√
	SR RF System D HVPS is OFF	√
	SR Dipole PS is OFF	√
Close FE Shutters with FE Shutter test fixture	FE Shutters closed	√
Replace ***"A chain"*** door switch actuator and reset fault(s)		√
Search hutch		√
	FOE Interlocked A and B ON (**green**), HMI	√
	FE Critical Device Permits A and B ON (**green**), HMI	√
Check Control Room SR HMI (Beamline Page)	FE Critical Device Permit A and B ON (**green**), SR HMI	√
Check I/O Box 7BM Beamline Enable Panel	FE Critical Device Permits A and B LEDs ON	√
Check I/O Box 28 Beamline Enable Panel	FE Critical Device Permit Sum A and B LEDs ON	√
Check Dipole PS (positive) Beamline Interface	A and B Permits ON, Dipole PS Pos. Interface	√
Check Dipole PS (negative) Beamline Interface	A and B Permits ON, Dipole PS Neg. Interface	√
Check SR RF System C HVPS Beamline Interface	A and B Permits ON, SR RF System C HVPS Interface	√
Check SR RF System D HVPS Beamline Interface	A and B Permits ON, SR RF System D HVPS Interface	√
Operator enables SR Dipole PS	SR Dipole PS is ON	√
Operator enables SR RF System C HVPS	SR RF System C HVPS is ON	√
Operator enables SR RF System D HVPS	SR RF System D HVPS is ON	√
Using FE Shutter test fixture, open the FE Shutters (SSA, SSB and Photon)		√
	FE Shutters open	√
Remove "***B chain***" switch actuator	FOE Interlocked B OFF, HMI	√
	FE Critical Device Permit B OFF, HMI	√
Check I/O Box 7BM Beamline Enable Panel	FE Critical Device Permit B LED OFF	√
Check Control Room SR HMI (Beamline Page)	FE Critical Device Permit B OFF (**red**), SR HMI	√
Check I/O Box 28 Beamline Enable Panel	FE Critical Device Permit Sum B LED OFF	√
Check SR RF System C HVPS Beamline Interface	B Permit OFF, SR RF System C HVPS Interface	√
Check SR RF System D HVPS Beamline Interface	B Permit OFF, SR RF System D HVPS Interface	√
Check Dipole PS (positive) Beamline Interface	B Permit OFF, Dipole PS Pos. Interface	√

Check Dipole PS (negative) Beamline Interface	B Permit OFF, Dipole PS Neg. Interface	✓
	SR Dipole PS is OFF	✓
	SR RF System C HVPS is OFF	✓
	SR RF System D HVPS is OFF	✓
Close FE Shutters with FE Shutter test fixture	FE Shutters closed	✓
Remove beamline hutch switch actuators and Maglock actuator		✓

A23 ***Observe All Shutters Closed Sum***

Check I/O Box 28 Beamline Enable Panel	FE Shutters closed A chain light ON	✓
	FE Shutters closed B chain light ON	✓
Using FE Shutter test fixture open both FE SSs and then Photon Shutter		✓
	FE Shutters open (**green**), HMI	✓
Check I/O Box 28 Beamline Enable Panel	FE Shutters closed A chain light OFF	✓
	FE Shutters closed B chain light OFF	✓
Close FE Shutters and remove FE shutter test fixture		✓

A24 ***FOE Area Radiation Monitor***

Refer to PS-C-ASD-PRC-008, *NSLS-II Area Radiation Monitor PPS Test* and complete Attachment D, *NSLS-II Beamline (FOE) Area Radiation Monitor Checklist.*

FRM 7-BM Test Checklist Completed NA

NO ARM HAS BEEN INSTALLED AT THIS TIME 7-BM 6/19/17

A25 ***Test Completion***

Inspect all hutch doors and labyrinths to ensure all PPS switch and Maglock actuators have been removed	✓
Return Beamline enable key and Beamline PPS reset key to the Control Room	✓
Remove muffler from beam imminent sounder	✓
Ensure PPS cabinets are secure and locked; challenge locks	✓
Remove all LOTO	✓
Inform Lead Operator that testing is complete	✓

- END –

Reviewed by:

6/27/2017

X Scott BUda

Scott Buda
Accelerator Safety Systems Group Leader
Signed by: Buda, Scott

6/26/2017

X Robert Chmiel

Robert Chmiel
NSLS-II Safety Officer
Signed by: Chmiel, Robert

Approved by:

6/27/2017

X

Robert Lee
NSLS-II ESH Manager
Signed by: Lee, Robert J

Revision History

Revision	Description	Date
1	First Issue.	23JUN2017