REVISION HISTORY					
REV	DESCRIPTION	DATE	DESIGNER	CHECKED BY	ENGINEER
A	RELEASE PER ECO-004761	6/2017	M. JOHANSON	C. STELMACH	E. HAAS

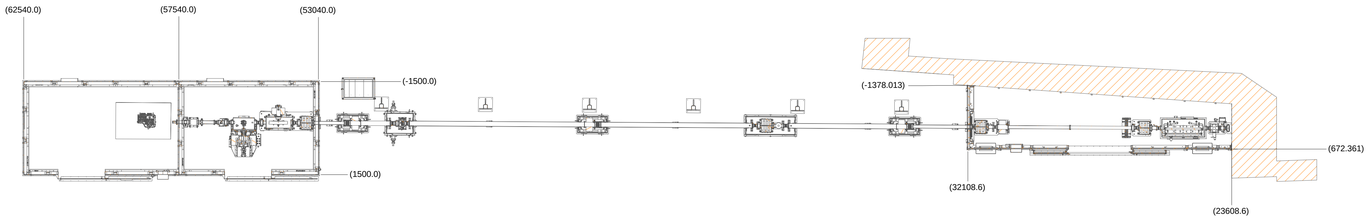

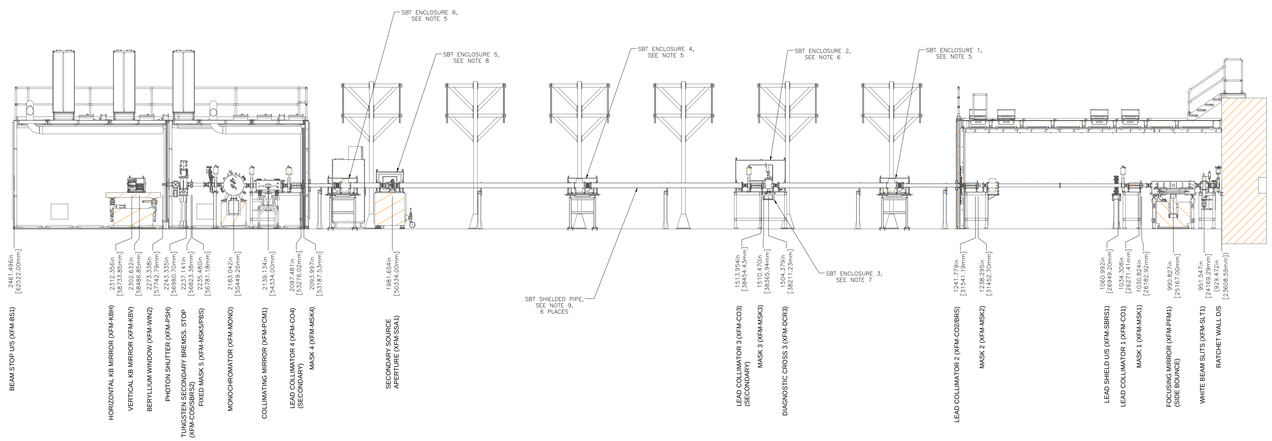

XFM (4-BM) BEAMLINE LAYOUT

SCALE: 1:50

NOTES:

1. REFERENCE DRAWING SR-FE-3PW-6001.
2. UNLESS OTHERWISE SPECIFIED THE 4-BM SOURCE POINT IS THE ORIGIN FOR ALL ORDINATE DIMENSIONS.
3. UNLESS OTHERWISE SPECIFIED, ORDINATE DIMENSIONS ARE TO THE U/S FACE FOR LEAD & TUNGSTEN SHIELDS, TO THE GEOMETRIC CENTER FOR NON-OPTICAL COMPONENTS (e.g. SLITS), AND TO THE OPTICAL CENTER FOR OPTICAL COMPONENTS.
4. ALL COLLIMATOR TUBES ARE SIZED WITH LESS THAN 1mm OF CLEARANCE TO THE MAX SYNCHROTRON FANS. SEE PD-XFM-CO-CALC-0107 Rev. A FOR THERMAL ANALYSIS REPORT. SEE ALSO RSC MEMO DATED MARCH 06, 2017 REGARDING REDUCED CLEARANCE.
5. SBT ENCLOSURE 1, 4 & 6 LEAD THICKNESS: 7mm U/S & D/S, 9mm TOP, BOTTOM, INBOARD & OUTBOARD.
6. SBT ENCLOSURE 2 LEAD THICKNESS: 9mm U/S & TOP, 7mm INBOARD AND OUTBOARD, 14mm D/S, 25mm STEEL BOTTOM.
7. SBT ENCLOSURE 3 LEAD THICKNESS: 5mm ALL AROUND
8. SBT ENCLOSURE 5 LEAD THICKNESS: 7mm U/S, TOP, INBOARD & OUTBOARD, 12mm D/S, 25mm STEEL BOTTOM.
9. SBT SHIELDED PIPE LEAD THICKNESS: 5mm WRAP ALL AROUND.
10. BETWEEN 35 AND 62 mrad THE HIGHEST ENERGY HARMONIC CONTENT IS STOPPED BY GUILLOTINE LEAD. ABOVE 62 mrad THE HIGHEST ENERGY HARMONIC CONTENT IS STOPPED BY STEEL OF HUTCH WALL AND ROOF. ENERGY IS DEPENDENT ON DEFLECTION ANGLE.
11. MONO CRYSTALS SHOWN AT 13 DEGREE ANGLE.

SPECIFICATIONS		REFERENCE
Project	BDN PROJECT	LT-EDP-015-045
Source	THREE POLE WIGGLER (3PW)	LT-C-SPC-SR-ID-BL-3PW-001 VERSION 1
Beam Line Name	X-RAY FLUORESCENCE MICROSCOPY BEAMLINE	LT-EDP-015-045
Abbreviation	XFM	LT-EDP-015-045
Period of insertion device	N/A	N/A
Cell	4-BM	LT-EDP-015-045
Length of Source	250 mm	LT-C-ASD-RSI-002
Location of Source (U/S of Start of Bending Magnet)	366 mm	LT-C-ASD-RSI-002
Ray Tracing Procedure		PS-C-XFD-PRC-008 VERSION 2
Front End Ray Tracing Drawing		SR-FE-3PW-6001 REV B

ABBREVIATIONS:

BRS - BREMSSTRAHLUNG STOP
BS - BEAM STOP
CO - BREMSSTRAHLUNG COLLIMATOR
D/S - DOWNSTREAM
MONO - MONOCHROMATER
MSK - FIXED MASK
PCM - PHOTON COLLIMATING MIRROR
PFM - PHOTON FOCUSING MIRROR
PSH - PHOTON SHUTTER
SBRS - SECONDARY BREMSSTRAHLUNG STOP
SBT - SHIELDED BEAM TRANSPORT
SCHM - SAMPLE CHAMBER
SLT - SLIT
SSA - SECONDARY SOURCE APERTURE
U/S - UPSTREAM
WIN - WINDOW
WBS - WHITE BEAM STOP

UNLESS OTHERWISE SPECIFIED ALL DIMENSIONS ARE IN INCHES
DIMENSIONS IN BRACKETS [xx.xx] ARE GIVEN IN MILLIMETERS AND ARE FOR REFERENCE ONLY
DESCRIPTIVE DRAWING AS PER ANSI Y14.24 AND ISO 128 & 129

DIMENSIONAL TOLERANCES	ANGULAR TOLERANCE
X ± 0.060 X.X ± 0.030 XX ± 0.015 XXX ± 0.005	± 5°

BREAK EDGES & SHARP CORNERS 0.005 MIN. TO 0.030 MAX.

DRAWN BY	M. JOHANSON	6/2017
CHECKED BY	C. STELMACH	6/2017
NATIONAL STANDARDS	-	-
ENGINEERING APPROVAL	E. HAAS	6/2017
ENGINEERING APPROVAL	R. TAPPERO	6/2017
ESHQ APPROVAL	L. STIEGLER	6/2017
QA APPROVAL	J. ZIPPER	6/2017

BROOKHAVEN NATIONAL LABORATORY
BROOKHAVEN SCIENCE ASSOCIATES
U.S. DEPARTMENT OF ENERGY
Exploring Life Sciences
Probing the Future

NSLS II NATIONAL SYNCHROTRON LIGHT SOURCE II

PHOTON DIVISION
XFM (4-BM)
BEAMLINE RAY TRACE

NEXT ASSY: N/A
PROJECT: BDN
THIRD ANGLE PROJECTION
SCALE SEE VIEW
WBS# 6.10.03
SIZE E
SHEET SIZE A1
ESHQ RISK LEVEL
DRAWING/PART NUMBER PD-XFM-RAYT-0001
REVISION A
SHEET 1 OF 10

Generic Frame: NSLS2-MAR2012-TD-SH-MAR-T-0001.dwg

RELEASED – EFFECTIVE

TABLE OF TOLERANCED DIMENSIONS (mm)								
LINE	DESCRIPTION	NOMINAL	±	FABRICATION	±	POSITION	=	TOTAL
1	BREMSSTRAHLUNG COLLIMATOR LEAD APERTURE (CO1)	10.94	+	2 x 0.18	+	2 x 1.5	=	14.30 MAX
2	BREMSSTRAHLUNG STOP LEAD APERTURE (CO2/BRS)	10.26	+	2 x 0.18	+	2 x 1.5	=	13.62 MAX

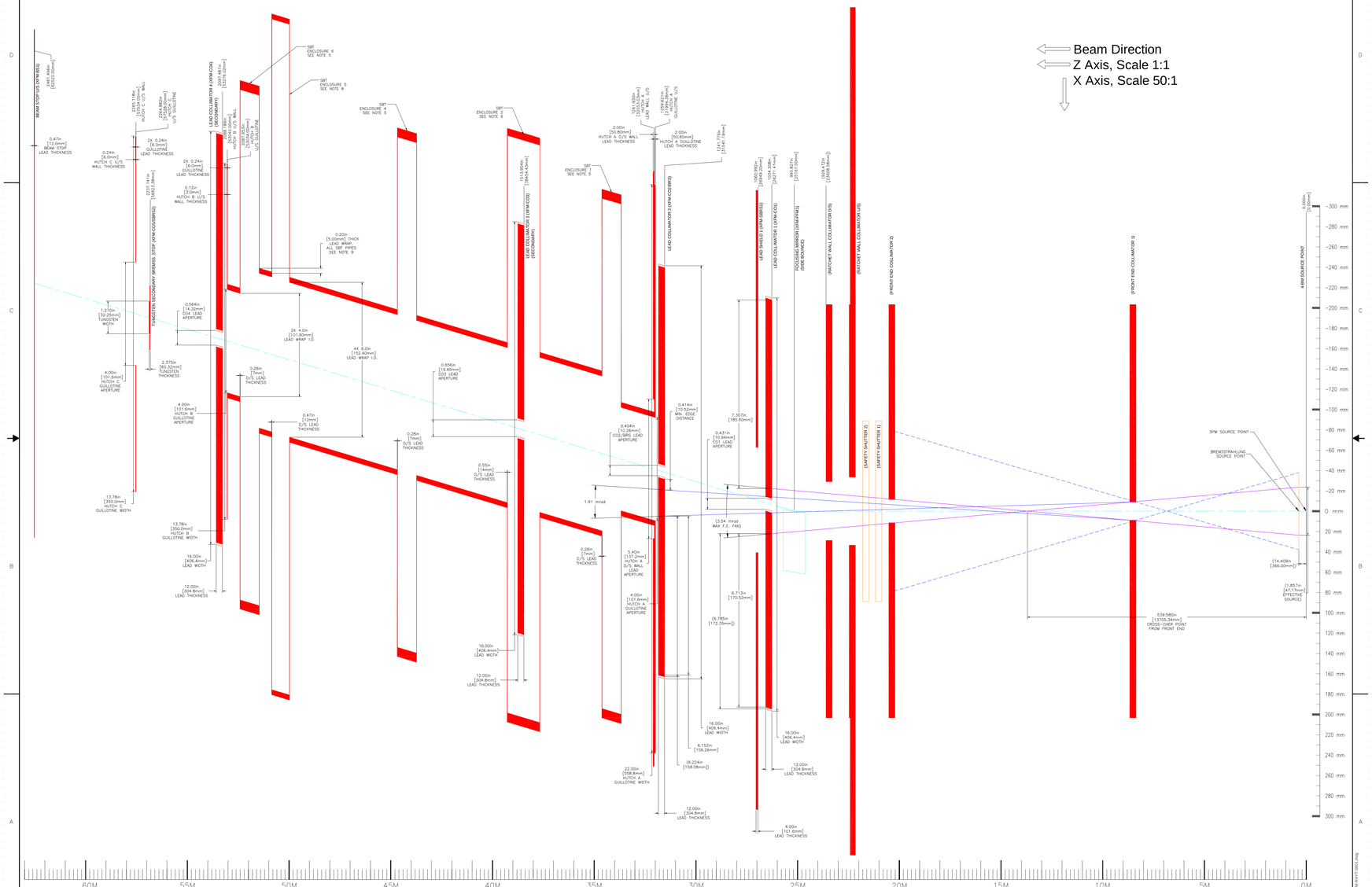

BREMSSTRAHLUNG RAY TRACING - HORIZONTAL

Scale 1:60

SEE FRONT END RAY TRACING
SR-FE-3PW-6001

E	PD-XFM-RAYT-0001	A
SHEET SIZE	DRAWING/PART NUMBER	REVISION
ESHAQ RISK LEVEL	A1	SHEET 6 OF 10

RELEASED – EFFECTIVE

TABLE OF TOLERANCED DIMENSIONS (mm)								
LINE	DESCRIPTION	NOMINAL	±	FABRICATION	±	POSITION	=	TOTAL
1	BREMSSTRAHLUNG COLLIMATOR LEAD APERTURE (CO1)	15.72	+	2 x 0.18	+	2 x 1.5	=	19.08 MAX
2	BREMSSTRAHLUNG STOP LEAD APERTURE (CO2/BRS)	13.53	+	2 x 0.18	+	2 x 1.5	=	16.89 MAX

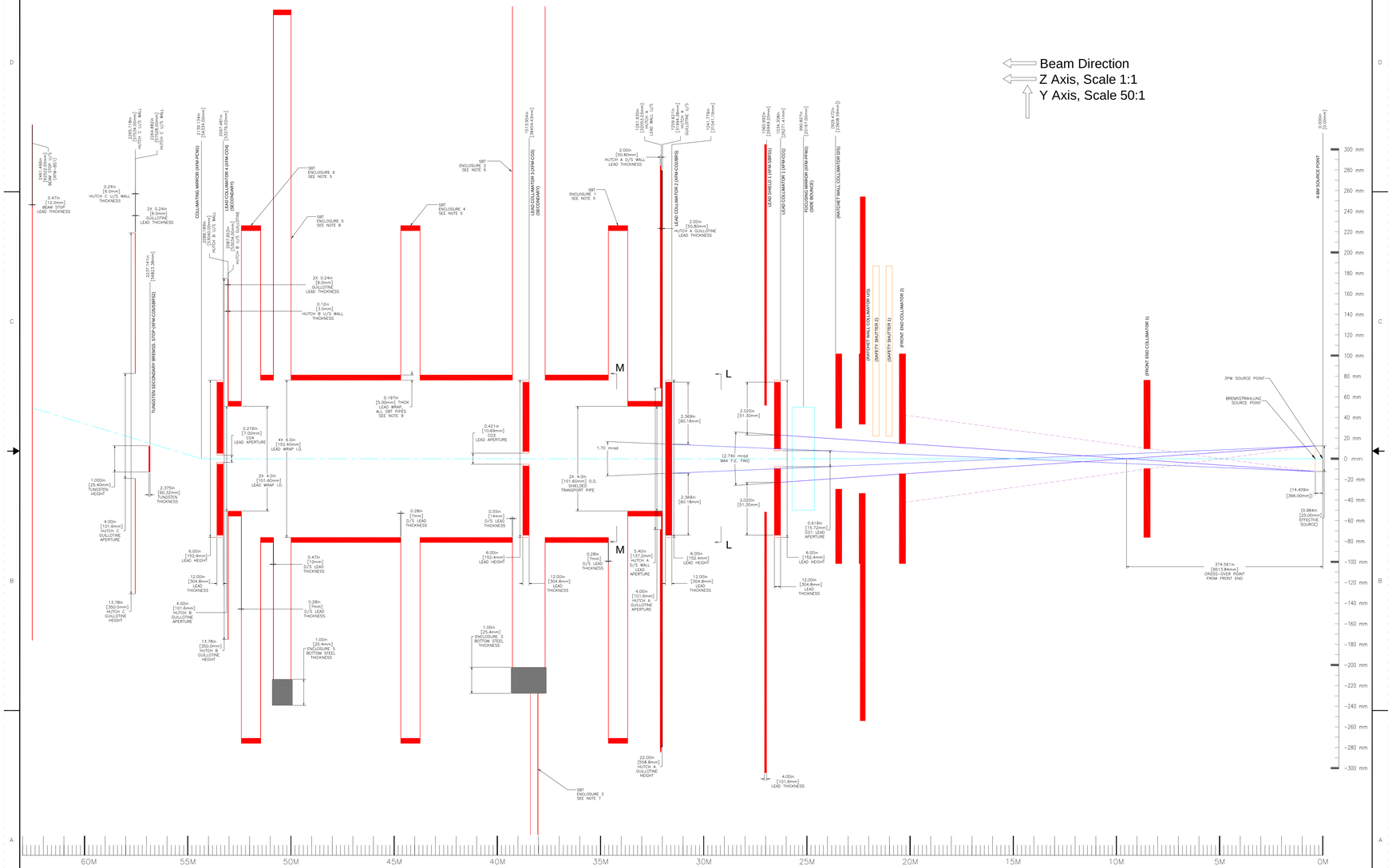

BREMSSTRAHLUNG RAY TRACING - VERTICAL

Scale 1:60

SEE FRONT END RAY TRACING
SR-FE-3PW-6001

E	PD-XFM-RAYT-0001	A
SIZE	DRAWING/PART NUMBER	REVISION
ESHAQ RISK LEVEL A1	SHEET 7 OF 10	

RELEASED – EFFECTIVE

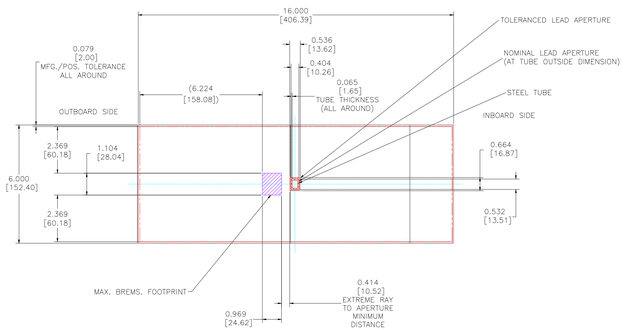

SECTION M–M
LEAD BREMSSTRAHLUNG STOP 2 (XFM–CO2/BRS)

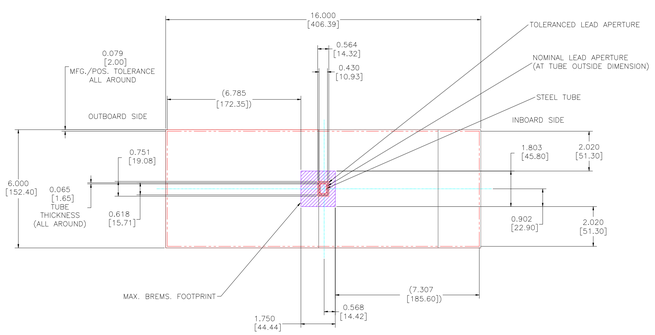

SECTION L–L
LEAD BREMSSTRAHLUNG COLLIMATOR 1 (XFM–CO1)

CROSS-SECTION VIEWS

Scale 1:2

E	PD-XFM-RAYT-0001	A
SHEET SIZE	DRAWING/PART NUMBER	REVISION
ESH&Q RISK LEVEL A1	SHEET 8 OF 10	

RELEASED – EFFECTIVE