REVISION HISTORY					
REV	DESCRIPTION	DATE	DESIGNER	CHECKED BY	ENGINEER
A	RELEASE PER ECO 004836	1/2017	J TUOZZOLO	CA/CS	M BREITFELLER
B	REVISED PER ECO-005066	5/2017	R GAMBELLA	CA/ML	M BREITFELLER

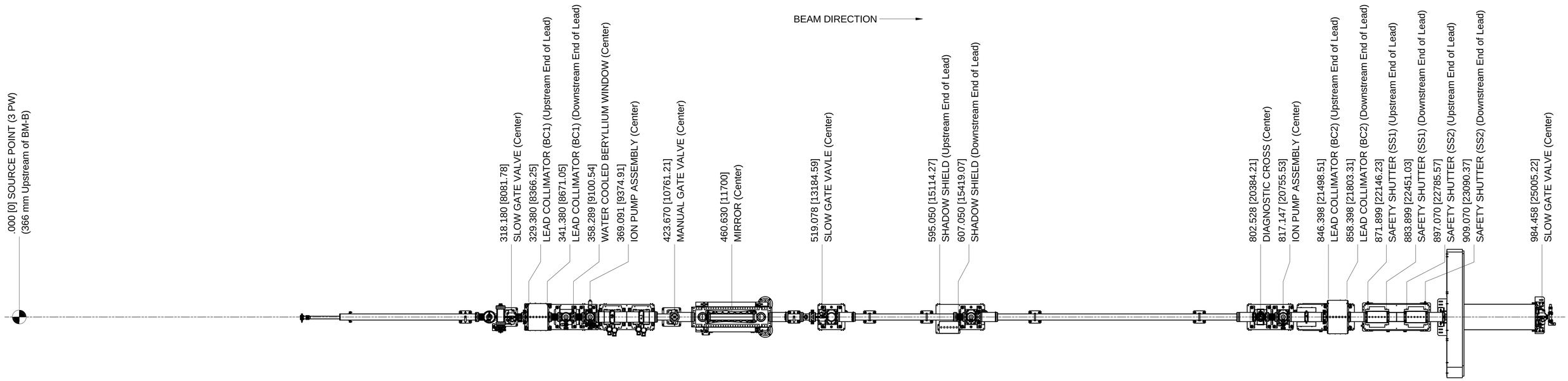

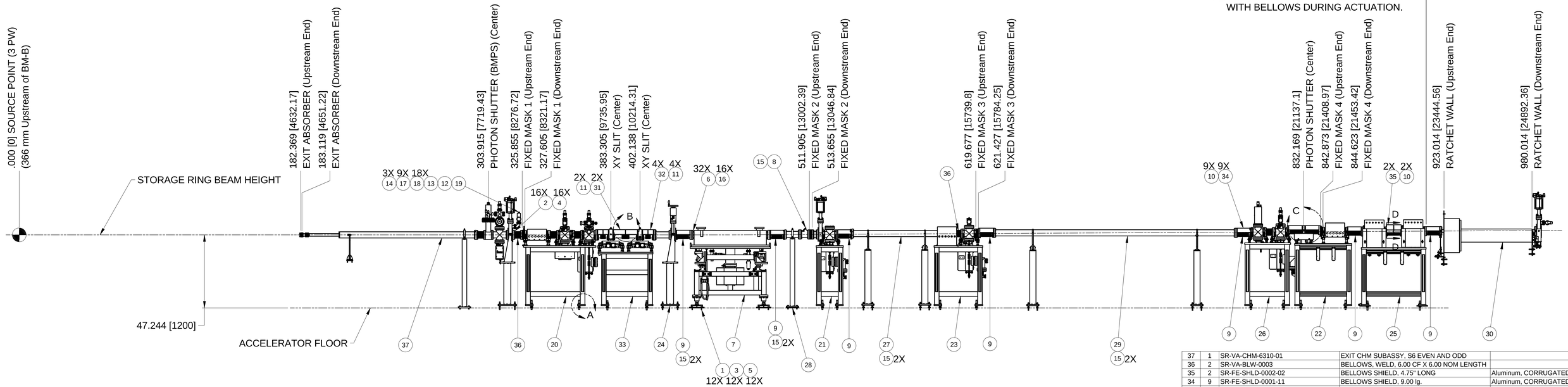

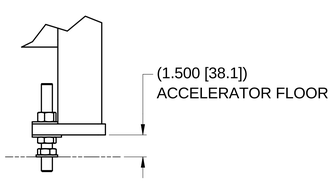

DETAIL A
SCALE 1 : 4

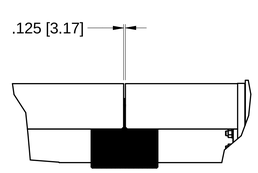

DETAIL B
4X
SCALE 1 : 4
INSTALL WITH GAP BETWEEN SHIELDS
CENTERED OVER BELLLOW, USE 2 CLAMPS

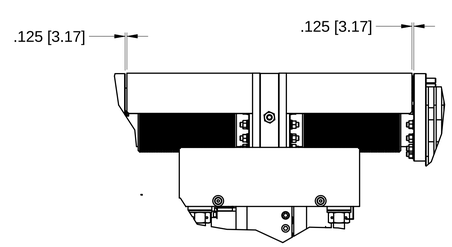

DETAIL C
7X
SCALE 1 : 4
1 PIECE DESIGN
INSTALL WITH .125 GAP BETWEEN SHIELD AND FLANGE,
INSTALL CLAMPS TO PHOTON SHUTTER FLANGE TO PREVENT
SHIELD FROM CONTACTING BELLOWS DURING ACTUATION

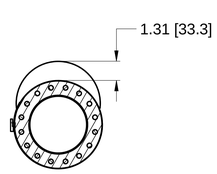

SECTION D-D
SCALE 1 : 4

NOTES:

1. COMPONENTS LAYOUT AS PER RSI (LT-C-ASD-RSI-002 VERSION 3).
2. ALL ORDINATE DIMENSIONS ARE FROM SOURCE-PONT (3PW)
3. SEE SHEET 3 FOR COMPONENT HEIGHTS DOWNSTREAM OF MIRROR AND ALIGNMENT DIMENSIONS.
4. SEE SHEET 3 FOR SURVEY AND ALIGNMENT DIMENSIONS.
5. RCO POSITION TOLERANCE OF ± .020 [.500] IN X, Y AND Z DIRECTION (BEAM DIRECTION)
   ALL OTHER COMPONENT POSITION TOLERANCE OF ± .008 [.200] IN X AND Y DIRECTION
   AND ± .020 [.500] IN Z DIRECTION (BEAM DIRECTION)
6. REFERENCE WATER FLOW DIAGRAM SR-FE-3PW-UT-4000
7. REFERENCE AIR SCHEMATIC SR-FE-3PW-UT-7001
8. FOR SURVEY PURPOSES USE FIXED MASK 1 TO ESTABLISH PRACTICAL FRAME.
9. REFERENCE RAY TRACE DRAWING SR-FE-3PW-4001
10. BAKE OUT THE FRONT END COMPONENTS IAW PS-C-ASD-PRC-105, NSLS II VACUUM SYSTEMS BAKE OUT. BAKE OUT THE MIRROR CHAMBER IAW PS-C-XFD-PRC-013, BEAMLINE VACUUM BAKE-OUT PROCEDURE, AND THE MANUFACTURER'S REQUIREMENTS.
11. INSTALL ALL SAFETY WIRE AFTER FINAL ALIGNMENT.

TOP OFF SAFETY CREDITED COMPONENT OR ASSEMBLY.
ANY CHANGES TO THIS DRAWING REQUIRES APPROVAL
OF THE TECHNICAL AUTHORITY FOR TOP OFF SAFETY.

B

COMPONENT	RADIATION SAFETY COMPONENT CHECKLIST	TOP OFF SAFETY SYSTEM
EXIT ABSORBER		X
FIXED MASK 1	X	X
LEAD COLLIMATOR 1	X	
FIXED MASK 2	X	
SHADOW SHIELD	X	
FIXED MASK 3	X	
FIXED MASK 4	X	
LEAD COLLIMATOR 2	X	
SAFETY SHUTTER 1	X	
SAFETY SHUTTER 2	X	
RATCHET WALL COLLIMATOR	X	

ITEM	QTY	PART NUMBER	DESCRIPTION	MATERIAL
37	1	SR-VA-CHM-6310-01	EXIT CHM SUBASSY, S6 EVEN AND ODD	
36	2	SR-VA-BLW-0003	BELLOWS, WELD, 6.00 CF X 6.00 NOM LENGTH	
35	2	SR-FE-SHLD-0002-02	BELLOWS SHIELD, 4.75" LONG	Aluminum, CORRUGATED
34	9	SR-FE-SHLD-0001-11	BELLOWS SHIELD, 9.00 lg.	Aluminum, CORRUGATED
33	1	SR-FE-3PW-SLT-2000	TABLE ASSEMBLY, SLIT-STAGE	
32	4	SR-FE-3PW-SHLD-0001-02	BELLOWS SHIELD, 3.86 lg.	Aluminum, CORRUGATED
31	2	SR-FE-3PW-SHLD-0001-01	BELLOWS SHIELD, 8.17 lg.	Aluminum, CORRUGATED
30	1	SR-FE-3PW-RCO-4000	RATCHET WALL COLLIMATOR, QAS	
29	1	SR-FE-3PW-4640	DRIFT PIPE, ASSY	
28	1	SR-FE-3PW-4630	DRIFT PIPE, ASSY	
27	1	SR-FE-3PW-4610	DRIFT PIPE, ASSY	
26	1	SR-FE-3PW-4031	SUPPORT, DIAGNOSTIC CROSS ASSY	
25	1	SR-FE-3PW-4030	SUPPORT, SAFETY SHUTTER ASSY	
24	1	SR-FE-3PW-4020	GATE VALVE ASSY	
23	1	SR-FE-3PW-4015	SUPPORT, SHADOW SHIELD ASSY	
22	1	SR-FE-3PW-4013	SUPPORT, PHOTON SHUTTER ASSY	
21	1	SR-FE-3PW-4005	SUPPORT, GATE VALVE ASSY	
20	1	SR-FE-3PW-4004	SUPPORT, Be WINDOW ASSY, QAS	
19	1	PI-VLV-0089	RIGHT ANGLE VALVE	STAINLESS STEEL TYPE 316L
18	18	PI-SCR-0053	SCR, FLANGE, 12-PT, .250-28 X 1.25	SST, SILVER PL
17	9	PI-NUT-0020	PLATE NUT, 2.75 CF	Stainless Steel
16	16	PI-NUT-0018	PLATE NUT, 6.00 CF	STAINLESS STEEL
15	9	PI-GSKT-0006	GASKET, COPPER, 4.01 ID (6.00 CF)	COPPER, OFHC
14	3	PI-GSKT-0003	GASKET, COPPER, 1.45 ID (2.75 CF)	COPPER, OFHC
13	1	PI-FLG-0003	FLANGE, BLANK, NR, DIA. 2.75 CF	Stainless Steel, Type 304 Per ASTM A240
12	1	PI-ELB-0030	ELBOW, 2.75 CF FLANGE FITTING	Stainless Steel
11	6	PI-CLMP-0056-01	CLAMP, HOSE, WORM DRIVE, S.S, 4.125" - 7"	STAINLESS STEEL TYPE 316L
10	11	PI-CLMP-0056	CLAMP, HOSE, WORM DRIVE, S.S, 4.125" - 7"	STAINLESS STEEL TYPE 316L
9	7	PI-BLW-0071	BELLOWS, EDGE WELDED, 6.00" CF FLANGE	
8	1	PD-XFM-VA-TEE-0100	TEE, REDUCING, 6"CF TO 2.75"CF, 45 DEGREE	
7	1	PD-QAS-PCM-1000	MIRROR ASSY, QAS PCM	
6	32	IFI 115 - 5/16 - 24 - 2	Flange 12-Point Screw	SST, Silver Pl
5	12	ASME B18.21.1 - 3/8	Regular Helical Spring Lock Washers(Inch Series)	Steel, Mild, Zinc Pl
4	16	ANSI B18.22M - 8 N	Metric Plain Washers	Stainless Steel
3	12	ANSI B18.22.1 - 3/8 - Regular - Type B	Plain Washer (Inch)Type A and B	Steel, Mild, Zinc Pl
2	16	ANSI B18.2.3.1M - M8 x 1.25 x 35	Metric Hex Cap Screw	SST, SILVER PL
1	12	ANSI B18.2.1 - 3/8-16 UNC - 1.75	Hex Cap Screw	Steel, Mild, Zinc Pl

PARTS LIST

7-BM BEAMLINE

NEXT ASSY:	FINAL
PROJECT:	NSLS-II

UNLESS OTHERWISE SPECIFIED
ALL DIMENSIONS ARE IN INCHES
DIMENSIONS IN BRACKETS [xx.xx] (WHERE PRESENT) ARE MILLIMETERS AND ARE FOR REFERENCE ONLY
INTERPRET DRAWING AS PER ASME Y14.5-1994 OR Y32.2-1975

DIMENSIONAL TOLERANCES: X. ± 0.060, .X ± 0.030, .XX ± 0.015, .XXX ± 0.005
ANGULAR TOLERANCE: ± .5°
FINISH: 125√
BREAK EDGES & SHARP CORNERS 0.005 MIN. TO 0.030 MAX.

THIRD ANGLE PROJECTION
SCALE: SEE DWG VIEW

BROOKHAVEN NATIONAL LABORATORY
BROOKHAVEN NATIONAL LABORATORY
BROOKHAVEN SCIENCE ASSOCIATES
UPTON, NEW YORK 11973
Exploring Life's Mysteries, Pioneering its Future

NSLS II NATIONAL SYNCHROTRON LIGHT SOURCE II

DRAWN BY	J TUOZZOLO	9/24/2014
CHECKED BY	CA/ML	12/2016
VACUUM APPROVAL	C HETZEL	12/2016
MECHANICAL APPROVAL	M BREITFELLER	12/2016
SUPERVISOR APPROVAL	S SHARMA	12/2016
ESH APPROVAL	A ACKERMAN	12/2016
QA APPROVAL	E CHESWICK	12/2016

STORAGE RING
FRONT END, 3PW
LAYOUT, QAS BEAMLINE

SHEET SIZE: E
SR-FE-3PW-4000
DRAWING/PART NUMBER
REVISION: B

WBS# 6.08.05.01
ESH&Q RISK LEVEL: A-1
SHEET 1 OF 4

C:\Mech-Eng\LT\SR\FE\3PW\SR-FE-3PW-4000.dwg

RELEASED – EFFECTIVE

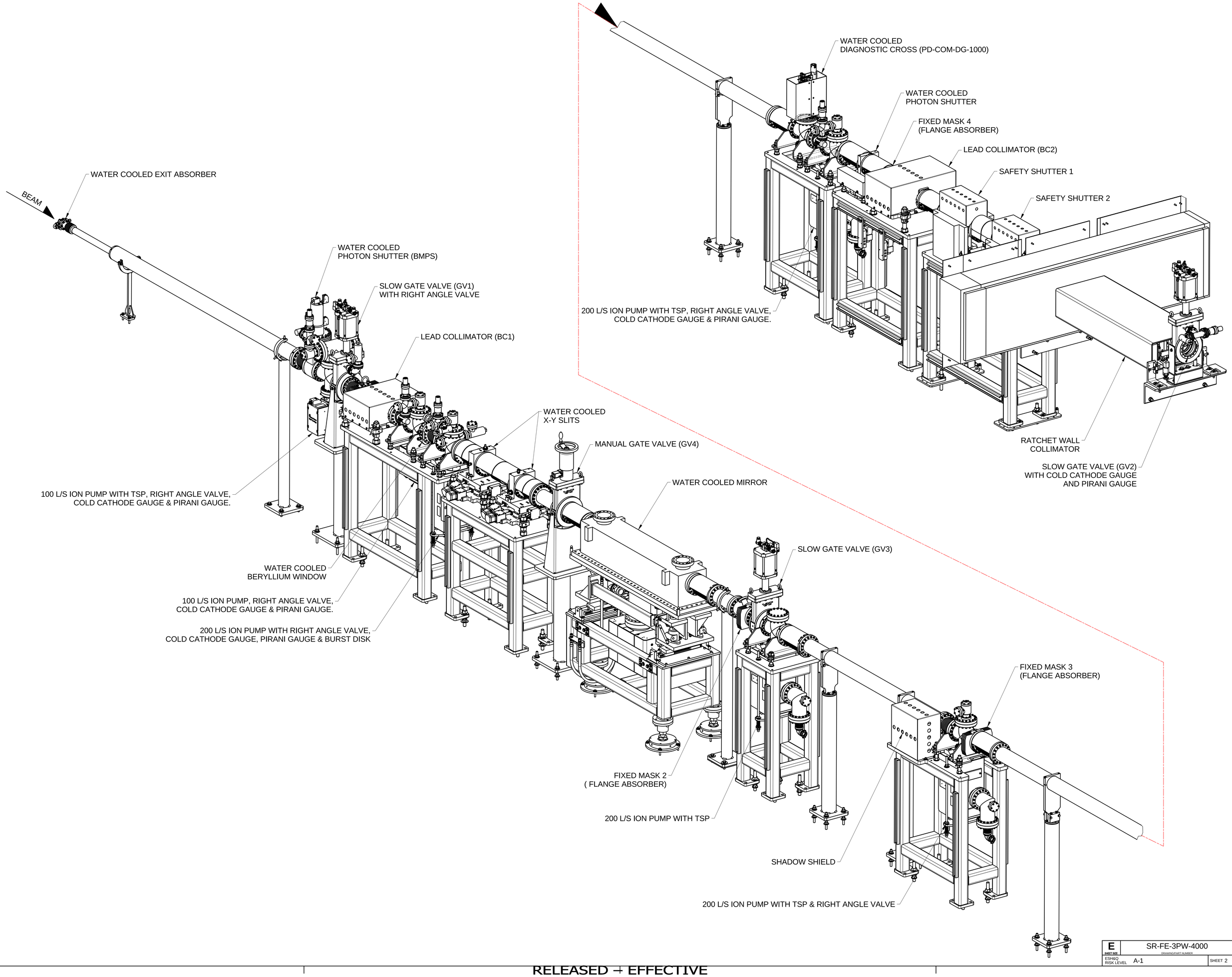

E (SHEET SIZE)	SR-FE-3PW-4000 (DRAWING/PART NUMBER)	B (REVISION)
ESH&Q RISK LEVEL A-1		SHEET 2 OF 4

C:\Mech-Eng\LTS\FE\SPW\SR-FE-3PW-4000.dwg

RELEASED + EFFECTIVE

BEAM DIRECTION

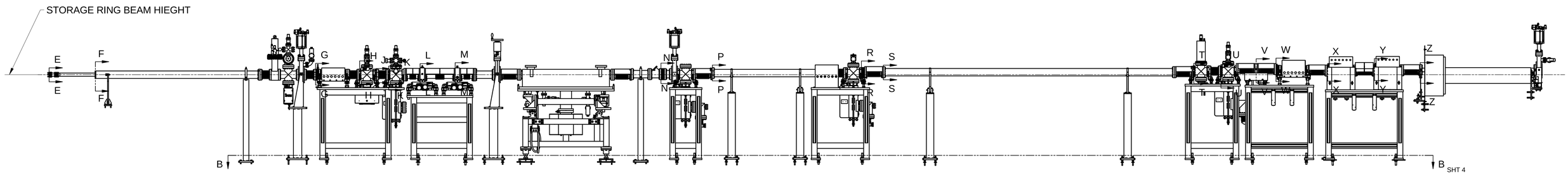

SCALE 1 : 20

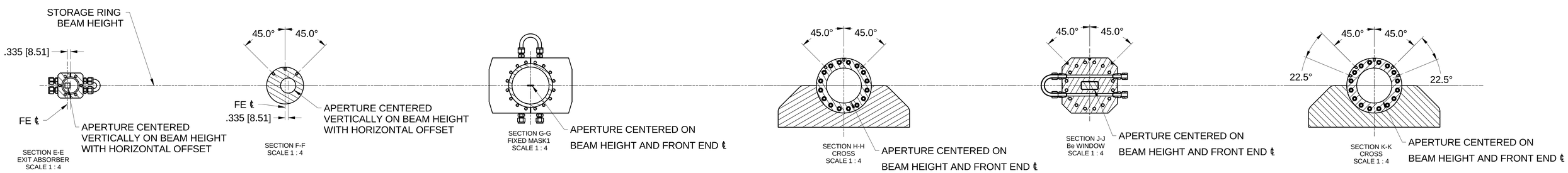

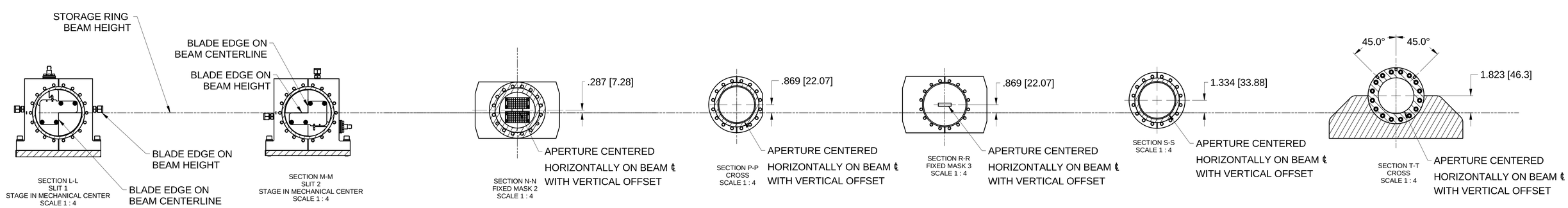

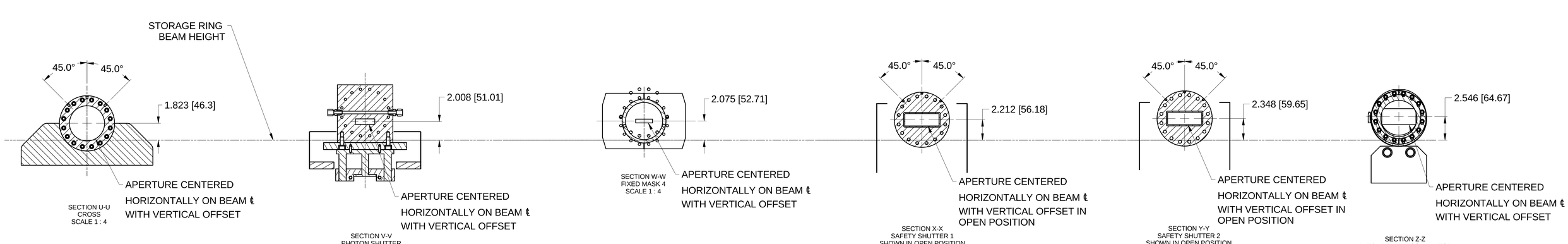

E (SHEET SIZE)	SR-FE-3PW-4000 (DRAWING/PART NUMBER)	B (REVISION)
ESH&Q RISK LEVEL A-1	SHEET 3 OF 4	

C:\Mech-Eng\LTS\SR\FE\3PW\SR-FE-3PW-4000.dwg

RELEASED + EFFECTIVE

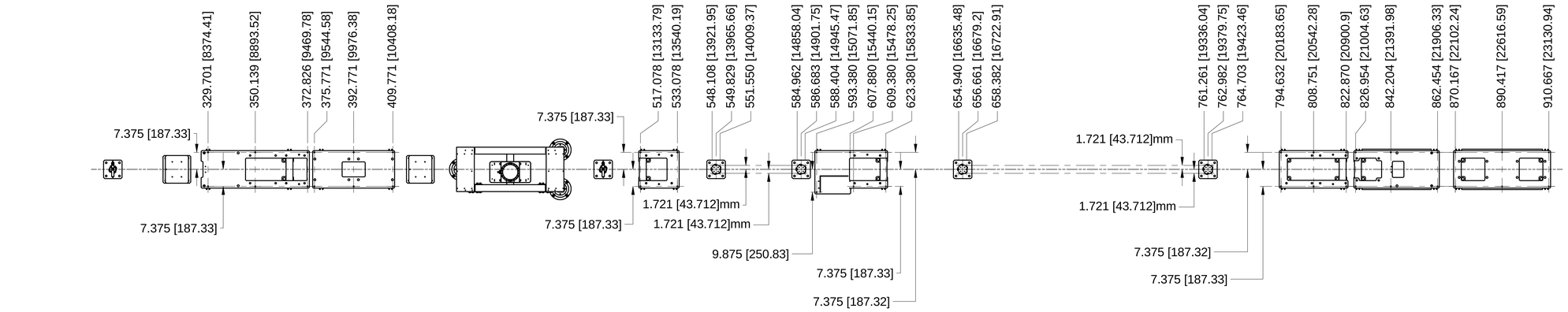

PEDESTAL AND TABLE FIDUCAIL LOCATIONS
SCALE 1 : 20

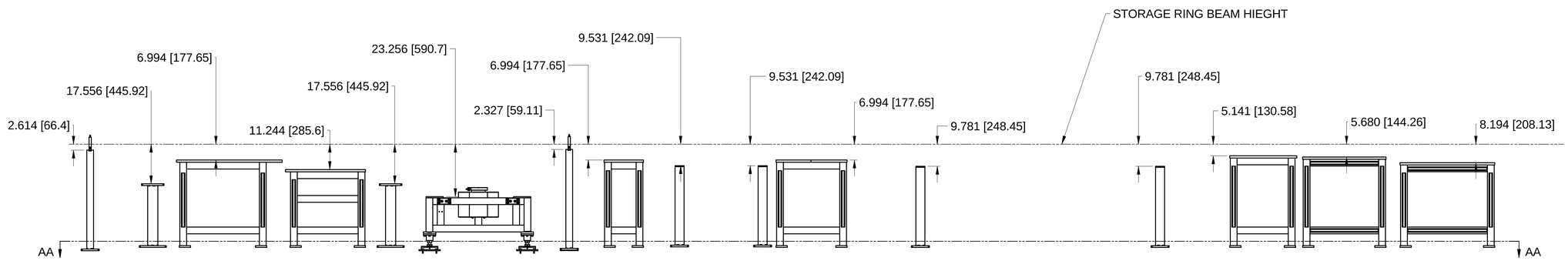

PEDESTAL AND TABLE HEIGHT
SCALE 1 : 20

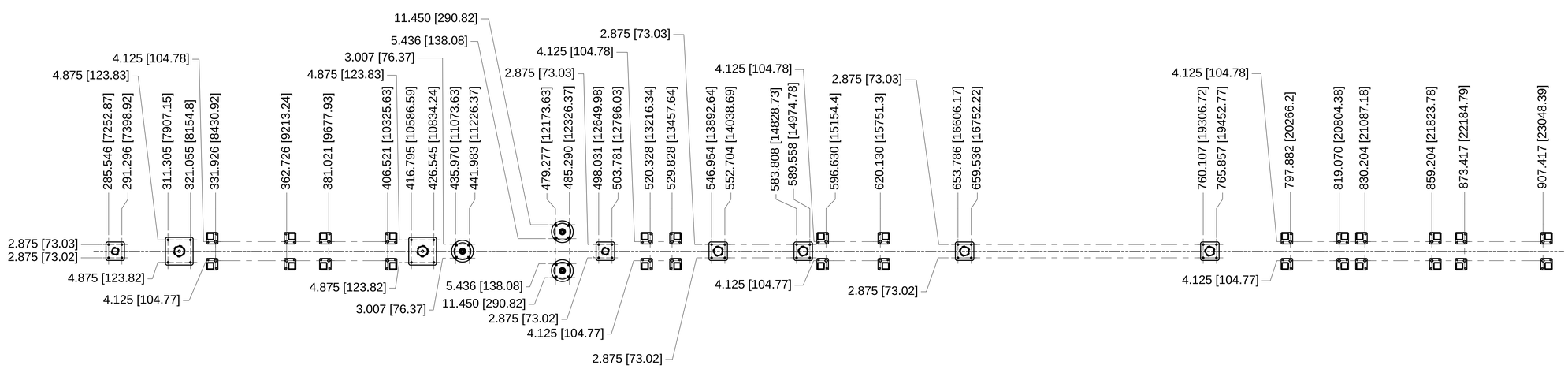

SECTION B-B
PEDESTAL AND TABLE FLOOR MOUNTING LOCATIONS
SCALE 1 : 20

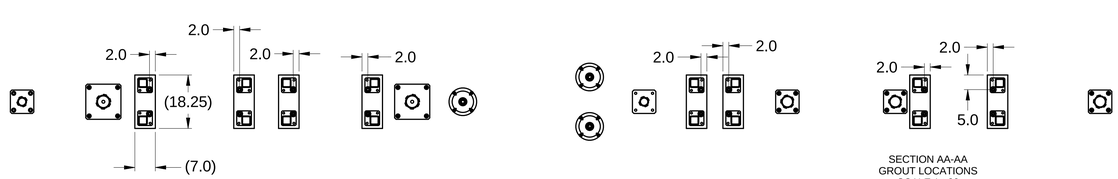

SECTION AA-AA
GROUT LOCATIONS
SCALE 1 : 20

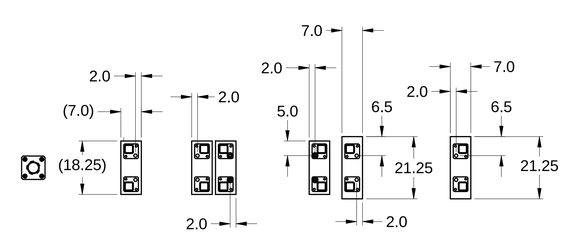

NOTES:

1. FOR Ø1.125[28.575] HOLES USE "3/4" P/N PI-HDW-0021 ANCHORS.
2. FOR Ø.750[19.050] HOLES USE "1/2" P/N PI-HDW-0040 ANCHORS.
3. FOR MIRROR HOLES USE "3/8" ANCHORS.
4. ALL GROUNT PADS 7.0" X 18.25" UNLESS OTHERWISE SHOWN.

E	SR-FE-3PW-4000	B
SHEET SIZE	DRAWING/PART NUMBER	REVISION
ESH&Q RISK LEVEL A-1	SHEET 4 OF 4	

C:\Mech-Eng\LT\SR\FE\3PW\SR-FE-3PW-4000.idw

RELEASED + EFFECTIVE