07-BM (QAS) TOP-OFF RADIATION SAFETY ANALYSIS

APPROVALS

8/9/2017

X Ray Fliller

Ray Fliller
Coordination Group for Top Off Safety Leader
Signed by: Fliller, Raymond

8/18/2017

X Timur Shaftan

Timur Shaftan
Accelerator Division Director
Signed by: Shaftan, Timur

8/25/2017

X

Paul Zschack
Photon Science Division Director
Signed by: Zschack, Paul

8/8/2017

X

Steve Moss
Authorization Basis Manager
Signed by: Moss, Steven H

8/11/2017

X

Robert Lee
ESH Manager
Signed by: Lee, Robert J

8/10/2017

X Steven N. Ehrlich

Steve Ehrlich
QAS Lead Beamline Scientist
Signed by: Ehrlich, Steven

NSLS-II TECHNICAL NOTE BROOKHAVEN NATIONAL LABORATORY	NUMBER: **NSLSII-TOS-RPT-014**
AUTHORS: M. Benmerrouche	DATE: **08/08/2017**
07BM (QAS) Top-Off Radiation Safety Analysis	

1. Introduction

The primary radiological safety concern for Top-Off injection, with the Front End (FE) safety shutters open, is the scenario where injected electrons could be transported down to the beamline through the FE due to an erroneous combination of lattice magnetic field settings and beam energy. These electrons will scatter off the FE components resulting in secondary radiation, which will further scatter off components in the First Optics Enclosure (FOE), thereby leading to potentially high dose rates outside the FOE walls and roof. The radiological consequences of this fault condition specifically for 07-BM (Quick X-ray Absorption and Scattering [QAS]) are analyzed and discussed in this report. For this beamline, FE components up to and including Mirror PCM, lie along the short straight (SS) centerline while remaining FE components, ratchet wall collimators, and FOE components are vertically offset. The goal of the simulations documented here was to estimate the radiation dose levels generated outside the FOE during this Top-Off fault condition with FE safety shutters open, thus evaluating the efficacy of the FE radiation safety components and the FOE shielding. This beamline was not covered by the Top-Off design report issued in 2014 [1].

The layout of the 07-BM (QAS) FE components is presented in Figure 1 and the layout of the beamline components inside the FOE and end station enclosures is presented in Figure 2.

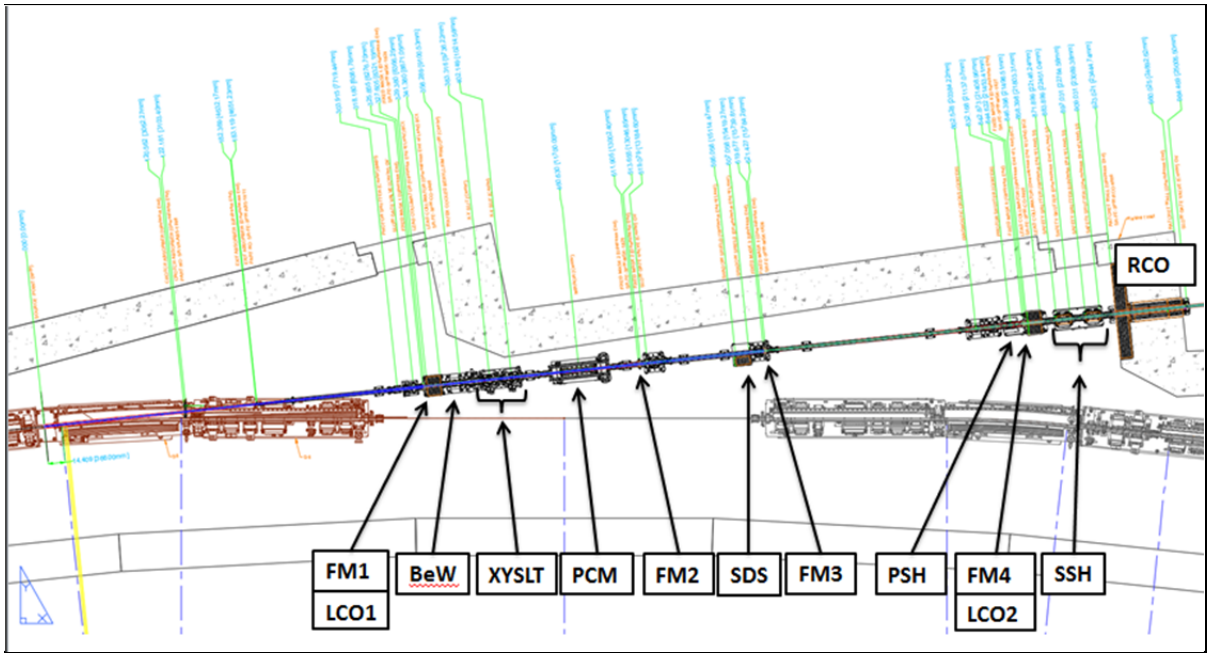

Figure 1: Layout of 07-BM (QAS) FE showing major components consisting of Masks, Collimators, Mirrors, Safety Shutters, and Ratchet Wall Collimator

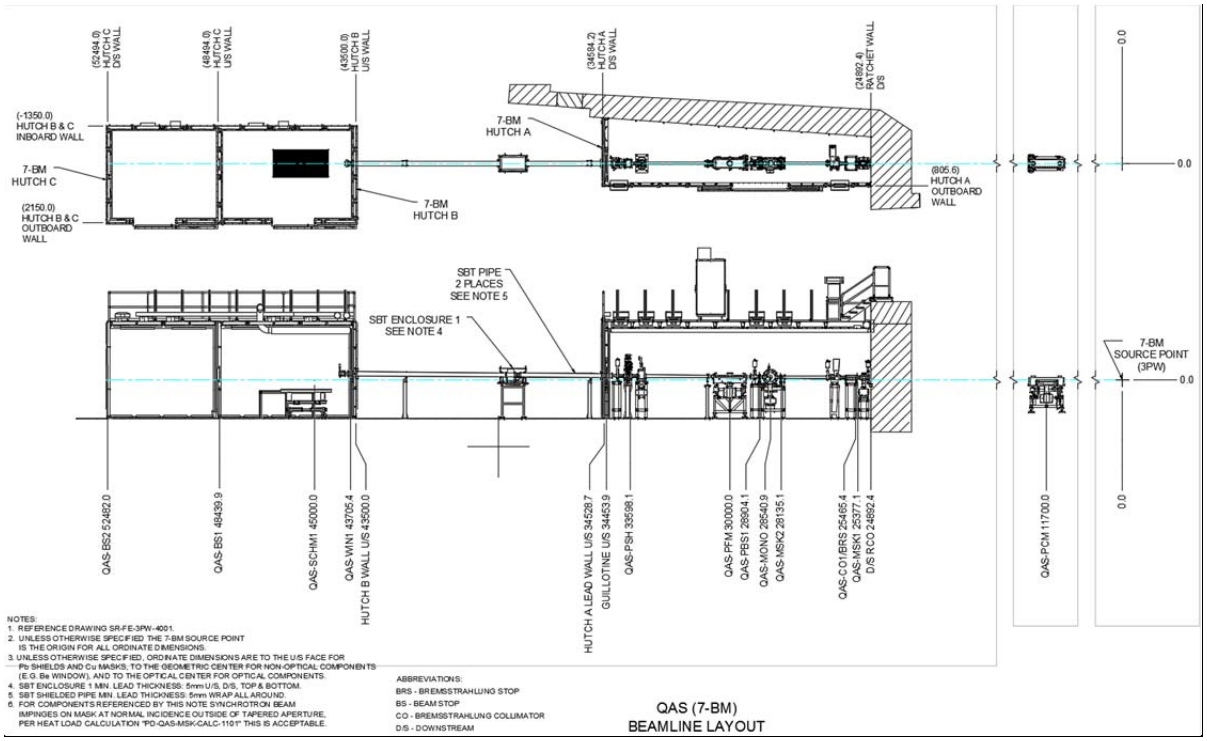

Figure 2: Layout of 07-BM (QAS) Beamline.

The 07-BM (QAS) FE is sufficiently similar to the 06-BM (BMM) FE. A comparison of the apertures of the exit absorber and FM1, along with the distance between them, shows that the QAS FE is safe for Top-Off using FM1 as the safe end point as decribed in Appendix 1, and taking into account the top-off particle tracking analysis that was carried out for 06-BM (BMM) [2]. FLUKA simulations were performed with a pencil beam striking the front face of FM1 inboard and outboard from the aperture edge considering different FE configuration such as, FE XY slits closed and PCM out of the beam.

The Top-Off radiological analysis for 07-BM (QAS) is discussed in Section 2, the FLUKA model is described in Section 3 and the results of the simulations are discussed in Section 4. A summary and conclusions are presented in Section 5.

This report can be used as a basis to approve the Top-Off Operation of the 07-BM (QAS) beamline, provided that the beamline and shielding configuration are not changed. The Top-Off Operation of new beamlines and the approval process shall be in accordance with procedure PS-C-ASD-PRC-183 [3].

2. Top-Off Radiological Scatter Targets

At NSLS-II, the TOSS guarantees that the injected electron beam does not channel down the FE and into the beamline FOE. The 07-BM (QAS) beamline has one mirror PCM in the FE, which reflects the synchrotron beam upward as illustrated in Figure 3. The apertures of the FE components downstream of M1, which consist of Fixed Mask 2 (FM2), Fixed Mask 3 (FM3), Fixed Mask 4 (FM4), Photon Shutter (PSH), Lead Collimator 2 (LCO2) and the ratchet wall collimator (RCO), are shifted vertically by 7.3 mm to 64.7 mm upward with respect to the short straight centerline to allow the pink beam to exit the FE and enter the FOE. The 07-BM (QAS) FE was assessed for Top-Off safety and it was determined that FM1 is the safe end point for the injected electrons, as described in Appendix 1. The particle tracking simulation establishes that the injected electron beam will have at least a 2 mm distance away from the FM1 nominal aperture and consequently will not pass through the aperture of FM1 and strike downstream FE components. Therefore, the upstream face of FM1 is the TOSS safe end point for the 07-BM (QAS) beamline. For the Top-Off radiological analysis, the injected electron beam impact at FM1 is assumed to be 2 mm on the inboard and outboard sides of the aperture.

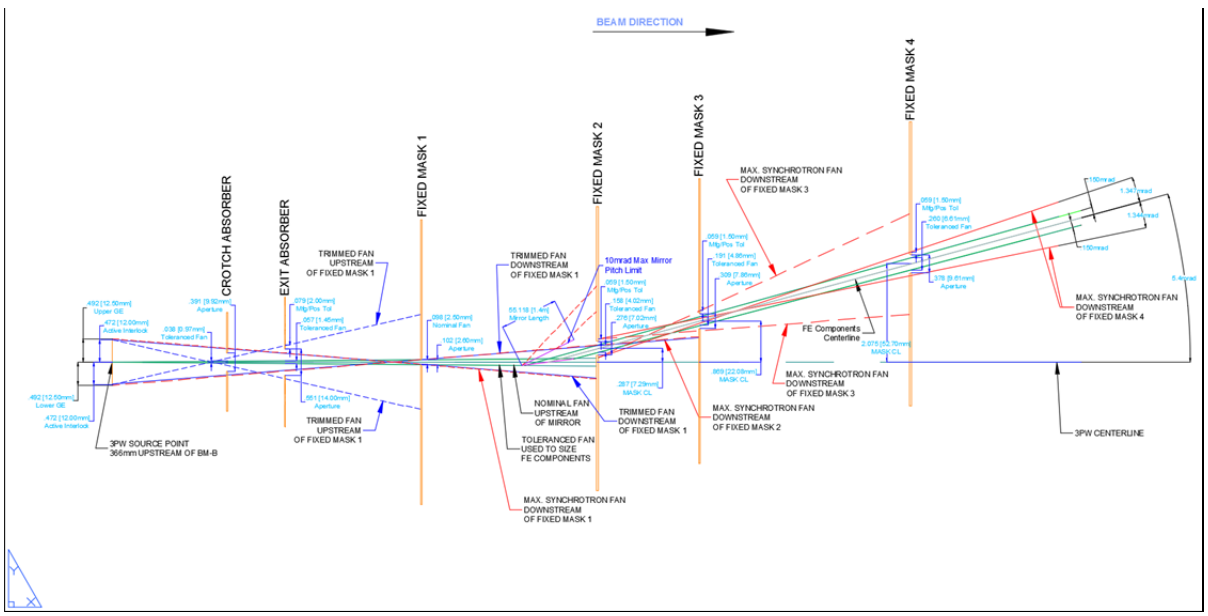

Figure 3: 07-BM (QAS) FE Vertical Ray Tracings for Synchrotron

3. Description of the FLUKA Model

The plan and elevation views of the FLUKA geometry used for the Top-Off simulations of the 07-BM (QAS) beamline are shown in Figure 4. The input used to generate the FLUKA model is listed in Appendix 2. The FLUKA input and output files are kept in the NSLS-II Key Safety Records.

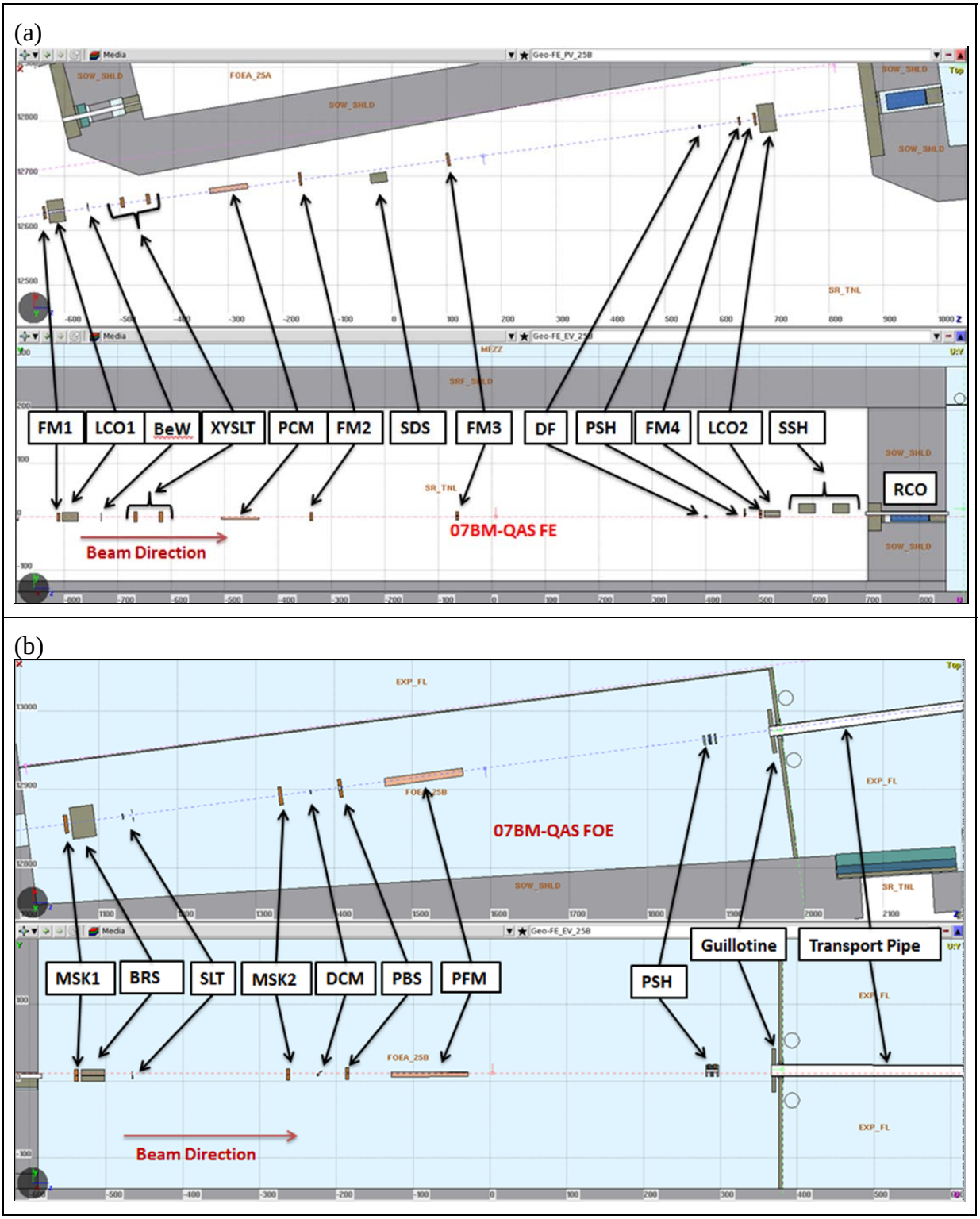

Figure 4: FLUKA Model used in Top-Off simulation of the 07-BM (QAS) (a) Beamline Front End and (b) Beamline FOE.

ACRONYMS:

BeW	Beryllium Window
BM	Bend Magnet
BRS	Bremsstrahlung Stop
CO	Bremsstrahlung Collimator
DCM	Double Crystal Monochromator
DF	Diagnostic Flag
FE	Front End
FM	Fixed Mask
FOE	First Optical Enclosure
GeV	Giga Electron Volts
LCO	Lead Collimator
MSK	Mask
NSLS-II	National Synchrotron Light Source II
PBS	Pink Beam Stop
PCM	Photon Collimating Mirror
PFM	Photon Focusing Mirror
PSH	Photon Shutter
QAS	Quick X-ray Absorption and Scattering
RCO	Ratchet Wall Collimator
SDS	Shadow Shield
SLT	Slits
SSH	Safety Shutter
TOSS	Top-Off Safety System

4. Results for Top-Off FLUKA Simulations

In all FLUKA simulations, a pencil beam of 3 GeV electrons is assumed for the injected beam and all dose rates are normalized to a booster to storage ring injection charge rate of 45 nC/min. As described in section 2, the beam is assumed to start just upstream of the front face of FM1.

The aperture of the FE collimators, LCO2 and RCO, primarily determines the amount of radiation transmitted into the FOE. In Table 1, the aperture dimensions for 07BM (QAS) are compared to those for 06-BM (BMM), 08-BM (TES) and 17-BM (XFP), noting that QAS, BMM and XFP have no LCO3. The parameters are extracted from the Top-Off Radiation Safety Analysis for 06-BM (BMM) [5], 08-BM (TES) [6] and 17-BM (XFP) [7].

Table 1: LCO2 and RCO Aperture Dimensions

	07BM (QAS)	**06BM (BMM)**	**08BM (TES)**	**17BM (XFP)**
LCO2 Dimensions X (mm)	63.49	57.92	43.94	36.42
LCO2 Dimensions Y (mm)	32.52	26.73	14.51	33.60
LCO3 Dimensions X (mm)	--	--	62.76	--
LCO3 Dimensions Y (mm)	--	--	18.43	--
RCO Dimensions X (mm)	116.00	116.00	106.00	106.38
RCO Dimensions Y (mm)	68.00	68.00	56.00	57.84
Vertical Offsets (mm) LCO2 LCO3 RCO	 +52.7 -- +64.70	 +50.2 -- +66.80	 -25.0 -25.0 -25.0	 +62.34 -- +87.29

The dimensions of the 07-BM (QAS) LCO2 vertical aperture dimension is slightly smaller than that for XFP but larger than those for BMM and TES, and the horizontal aperture dimension is larger than those for BMM, TES and XFP. The RCO dimensions are the same as BMM but approximately 10 mm larger than those for TES and XFP. The 07-BM (QAS) simulations were undertaken to evaluate the implications of the aperture sizes of LCO2 and RCO on the dose rates outside the FOE walls and roof.

The following two scenarios were considered in the FLUKA simulation analysis and the radiation dose results are reported in this section.

1. Injected beam starting 2 mm from the inboard side of FM1 aperture
2. Injected beam starting 2 mm from the outboard side of FM1 aperture

The dose rates on the walls and roof the FOE were found to be well below 100 mrem/h for both scenarios. We have also considered FE configurations when the XY slits are in the closed position or the PCM mirror is out of the beam. The case where the PCM is retracted out of the beam gives total dose rates similar to the case where the PCM mirror is inserted. In the case where the slits are closed, the total dose rates are lower due to the attenuation of the forward directed radiation by the slits copper body.

4.1 Injected Beam Starting at the Inboard Side of the Downstream Aperture of FM1

In this simulation, the injected electron beam was started just upstream of the selected point of contact and impinges 2 mm from the inboard side of the FM1 aperture. The total dose distributions (mrem/h) in the FE and FOE are shown in Figure 5 and the corresponding neutron distributions are given in Figure 6.

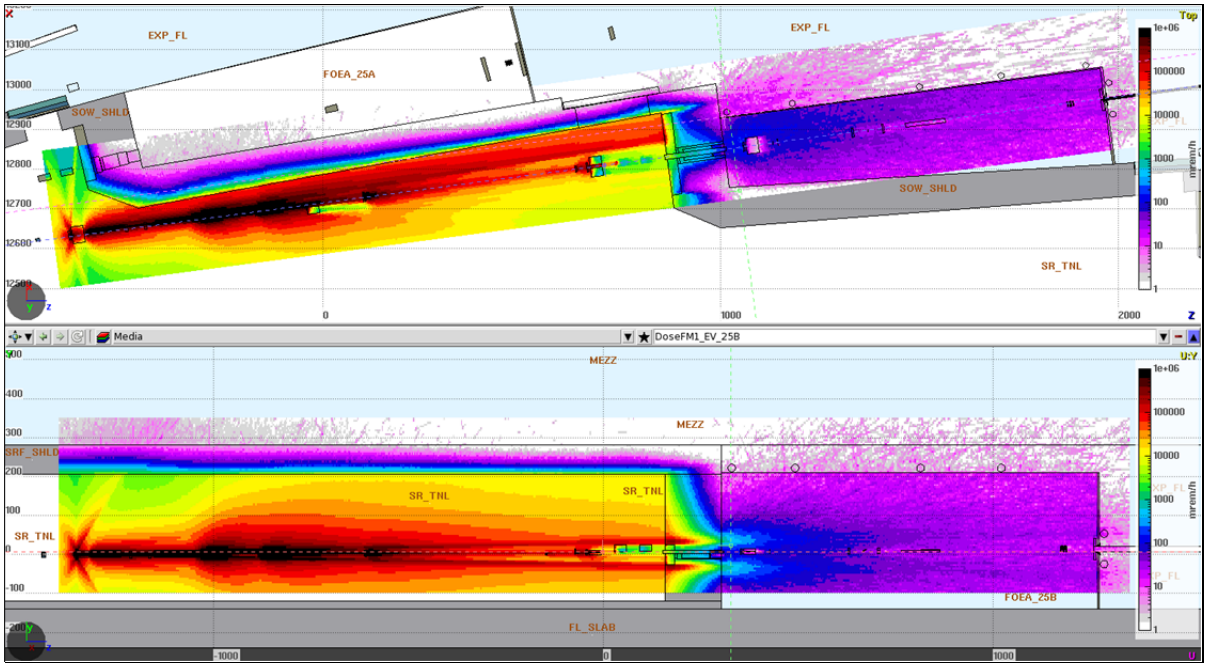

Figure 5: Total dose rate distributions (mrem/h). The plan view at y=6.47 cm (center of the RCO) is shown in the top figure and the elevation view at FE centerline is shown in the bottom figure.

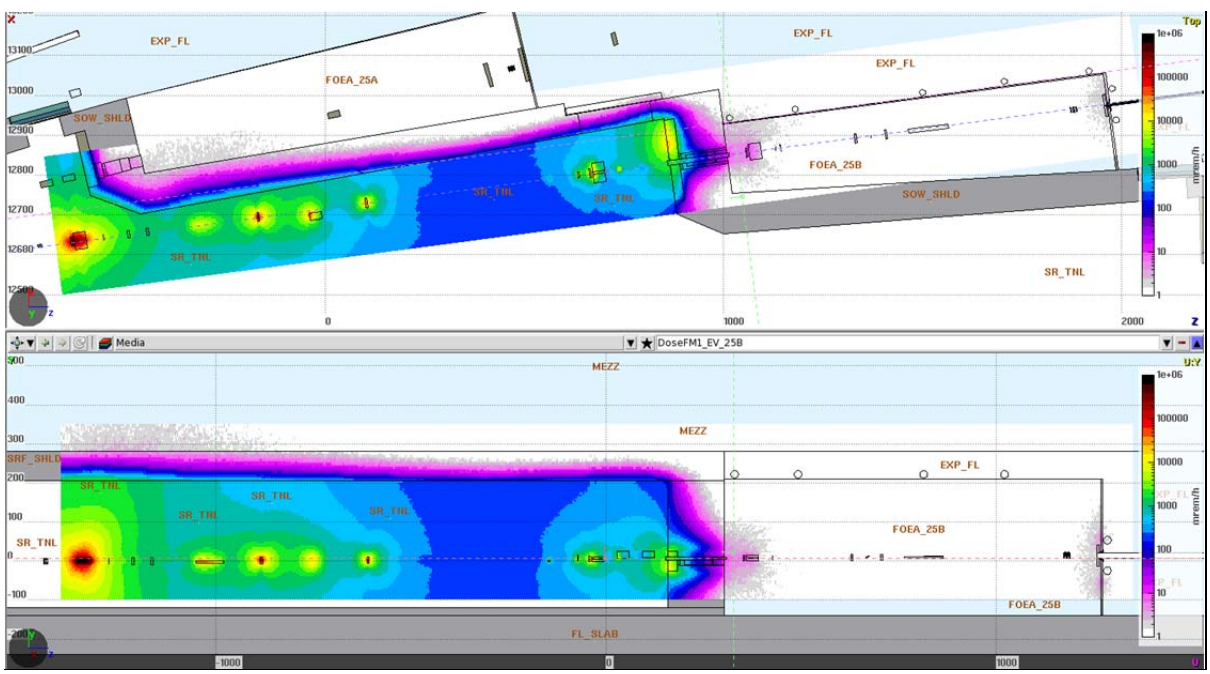

Figure 6: Neutron dose rate distributions (mrem/h). The plan view at y=6.47 cm (center of the RCO) is shown in the top figure and the elevation view at FE centerline is shown in the bottom figure.

When the electrons strike near the apertrure of FM1, the beam is scattered largely in the forward direction with the more intense radiation traveling through the aperture until it is further scattered by the PCM, mostly in the forward direction. The scattered radiation is intercepted by fixed masks and attenuated by LCO2, and the ratchet wall shielding, except the radiation that passes through the apertures of LCO2 and RCO. This radiation then strikes beamline components in the FOE, in particular MSK1, and is attenuated by the BRS.

Figure 7 shows that the total dose rates on the roof, lateral wall and downstream wall do not exceed 100 mrem/h. The total dose rates on contact with the roof and lateral wall are less than 10 mrem/h and 50 mrem/h respectively. The total dose rates on contact with the downstream wall do not exceed approximately 30 mrem/h.

(a)

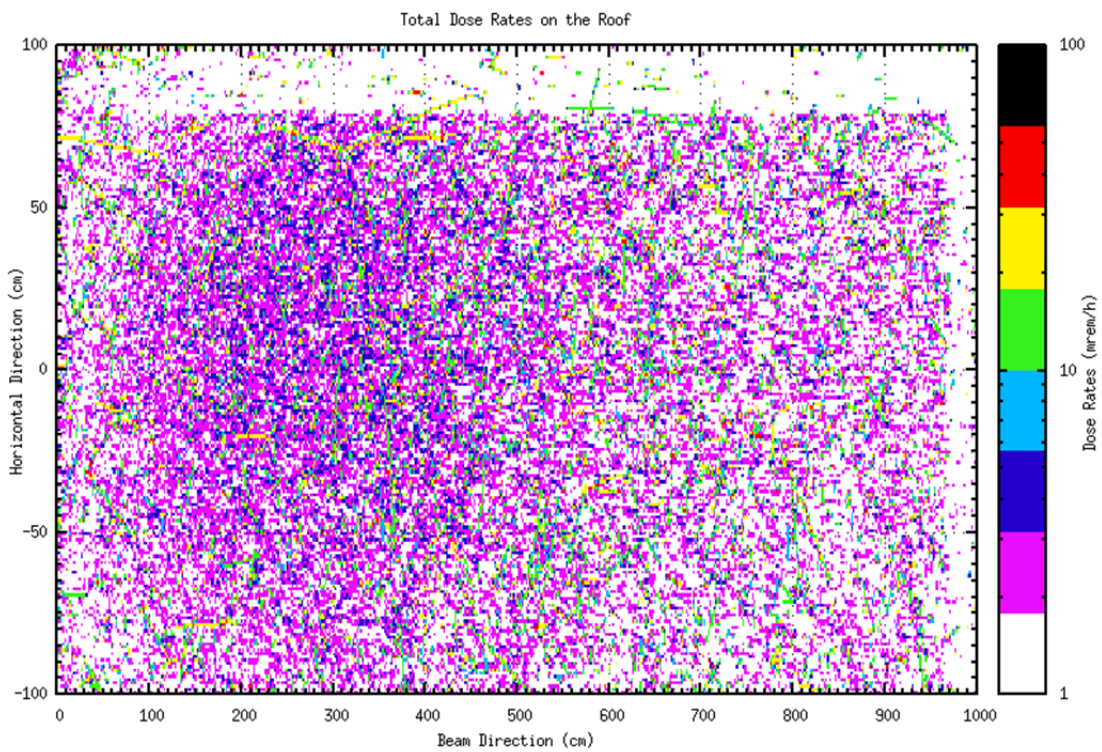

(b)

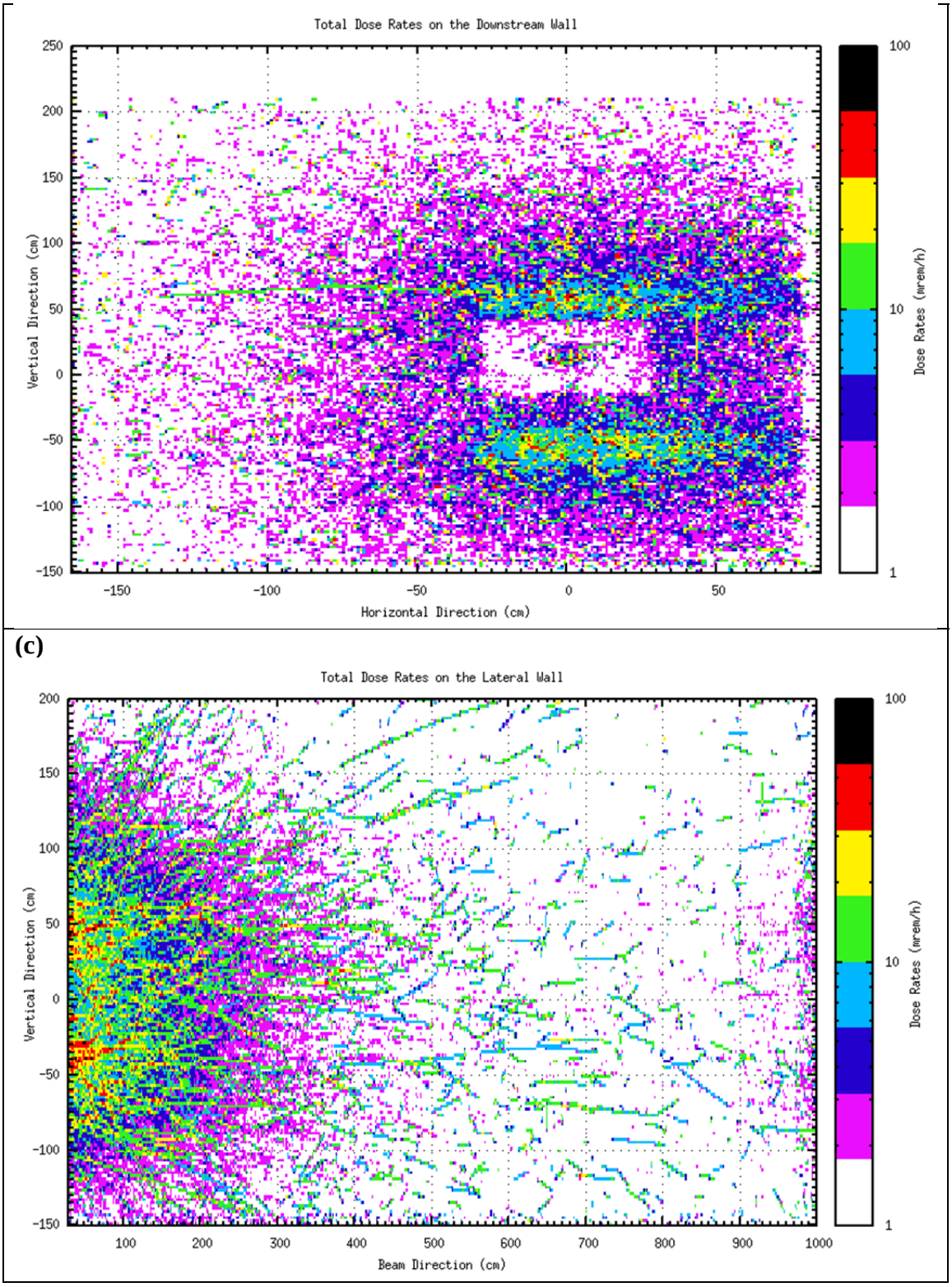

Figure 7: Total dose rate distributions (mrem/h) (a) on the roof, (b) on contact with the downstream FOE wall, and (c) on the lateral wall.

4.2 Injected Beam Starting at the Outboard Side of the Downstream Aperture of FM1

In this simulation, the injected electron beam was started just upstream of the selected point of contact and impinges 2 mm from the outboard side of the FM1 aperture. The total dose distributions (mrem/h) in the FE and FOE are shown in Figure 8 and the corresponding neutron distributions are given in Figure 9. These dose rates are similar to those discussed in section 4.1. For both cases, the total dose rates on the roof and walls of the FOE are well below 100 mrem/h.

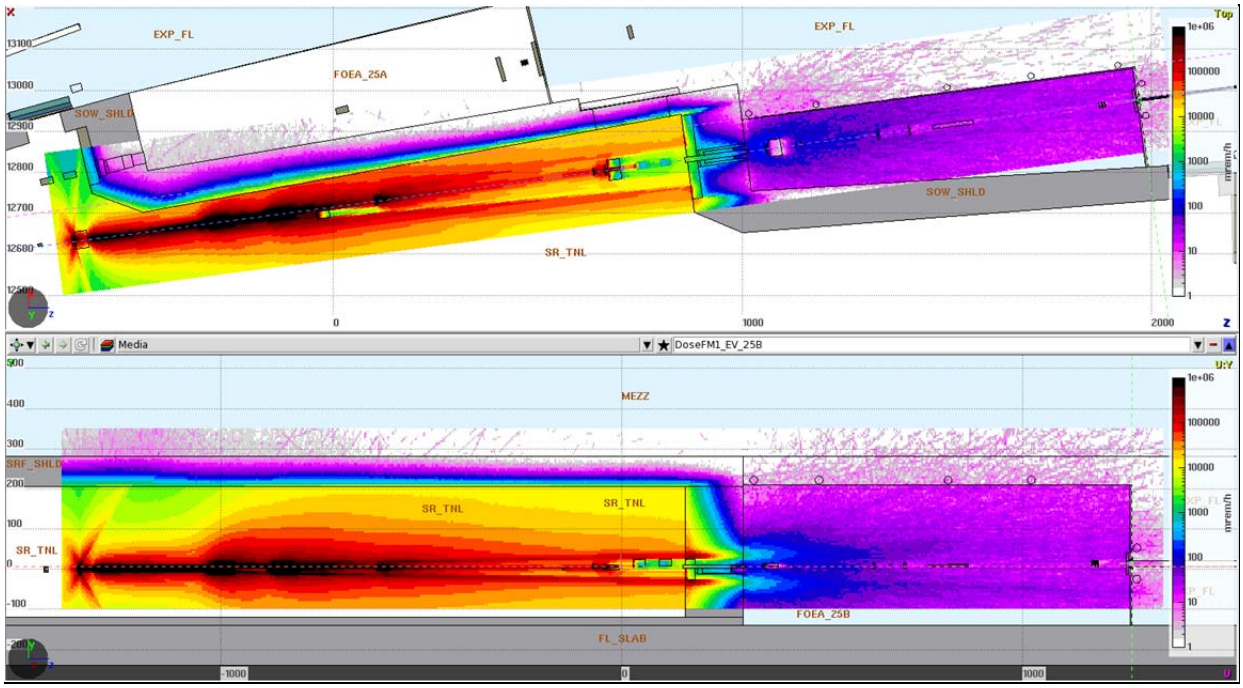

Figure 8: Total dose rate distributions (mrem/h). The plan view at y=6.47 cm (center of the RCO) is shown in the top figure and the elevation view at FE centerline is shown in the bottom figure.

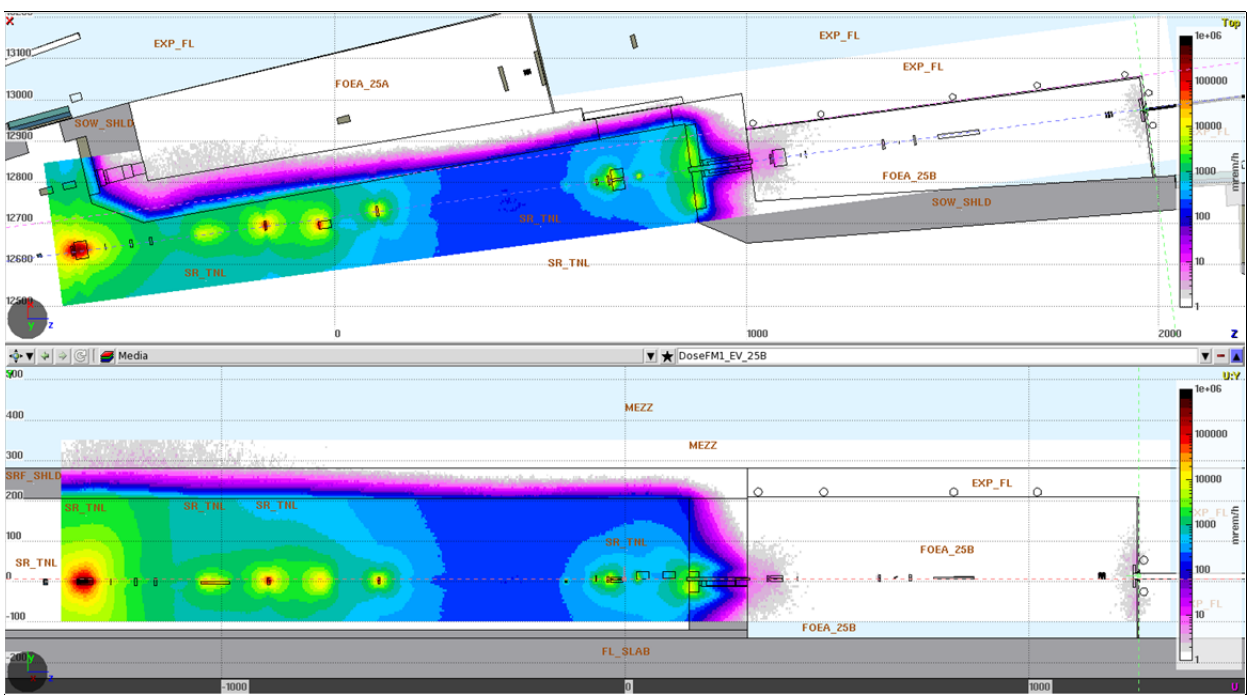

Figure 9: Neutron dose rate distributions (mrem/h). The plan view at y=6.47 cm (center of the RCO) is shown in the top figure and the elevation view at FE centerline is shown in the bottom figure**.**

5. Summary and Conclusions

Based on the determination by NSLS-II Accelerator Physicists that injected electrons will not pass through the FM1 aperture and travel beyond FM1 (see Appendix 1), FLUKA simulations were performed using FM1 as the safe end point for injected electrons. The results of the simulations, as described in sections 4.1 and 4.2, show that the total dose rates on the walls and roof of the 07-BM (QAS) FOE are less than 100 mrem/h. According to the NSLS-II Shielding Policy [4], radiation dose rates below 100 mrem/h for such a fault condition do not require any additional engineered controls beyond what TOSS provides. In addition to the LCOs and RCO, which are identified as 07-BM (QAS) FE Radiation Safety Components, the FE components used in the particle tracking analysis (Exit Absorber and FM1) should have their apertures and positions kept under configuration control for the purposes of Top-Off safety at 07-BM (QAS).

6. References

[1] *Top-Off Safety Analysis and Requirement of Hazard Mitigation for NSLS-II Facility*, PS-RASD-RPT-DRV-001 (2014).

[2] R. Fliller and Y. Li, 06BM -BMM *Top-Off Backward Particle Tracking Analysis, NSLS-II* Tech Note 247 (05/04/2017).

[3] PS-C-ASD-PRC-183, *Approval of New and Modified NSLS-II Beamline Front Ends for Top Off Safety* (01/14/2015).

[4] *Photon Sciences Shielding Policy*, PS-C-ASD-POL-005 (03/26/2014).

[5] M. Benmerrouche, *06BM (BMM) Top-Off Radiation Safety Analysis*, NSLS-II-TOS-RPT-012 (07/12/2017).

[6] M. Benmerrouche, R. Fliller and Y. Li, *08BM (TES) Top-Off Radiation Safety Analysis*, NSLS-II-TOS-RPT-007 (08/04/2016).

[7] M. Benmerrouche, R. Fliller and Y. Li, *17BM (XFP) Top-Off Radiation Safety Analysis*, PS-C-ASD-TOS-RPT-004 (05/19/2016).

7. Acknowledgements

We would like to thank M. Breiteller and L. Lienhard for providing all the beamline information required for FLUKA simulations as listed in Appendix 2 and for multiple discussions.

Appendix 1

From: Fliller, Raymond
Sent: Wednesday, May 24, 2017 2:31 PM
To: Lee, Robert J
Subject: FW: QAS Top Off Safety and Apertures

For the report:

The front end for QAS is sufficiently similar to BMM that a comparison of the apertures of the exit absorber and fixed mask one, along with the distance between them, shows that the front end of QAS is safe for top off because the front end for BMM is safe for top off. Top Off safety for BMM was shown with the usual particle tracking in NSLS II Tech Note 247. Fixed mask #1 and Exit Absorber are used as the top off apertures. Table 1 shows a comparison of the relevant parameters for the comparison. Even though the exit absorber for QAS is 4 mm wider than BMM, and FM1 is almost 1 mm wider than BMM, the distance between them is 230 mm larger in QAS. The increased distance between the apertures makes the opening angle for QAS to be 30% smaller. The because of this, and using the fact that BMM is safe, QAS is safe for top off using FM1 as the safe point. No tracking is required.

Table 1: Comparison of Parameters related to Top Off Safety for QAS and BMM

	BMM	QAS
Fixed Mask #1 Horizontal Aperture	±8.14 mm	±8.37 mm
Exit Absorber Horizontal Aperture	±7 mm	±9 mm
Longitudinal Separation	3.39537 m	3.66992 m

The top off apertures for QAS are the same as BMM:
FM1 (+/-2mm horizontal alignment)
Exit absorber (+/-2mm horizontal alignment)
S4 chamber with blank off (+/-5 mm horizontal alignment)

Ray

Raymond Fliller
Brookhaven National Laboratory
National Synchrotron Light Source II
Building 744
P.O. Box 5000
Upton, NY 11973-5000
Phone: 631-344-2356
Fax:631-344-3029

Appendix 2

07-BM (QAS) Input provided by Mark Breitfeller and Lukas Lienhard: updated on Jul 24, 2017.

The source point is the origin of the co-ordinate system. The FE centerline was used as the z or beam axis for the FLUKA models. Y is the vertical axis and x the horizontal axis orthogonal to the y and z axes.

Table 1.1 Beamline Enclosure: First Optical Enclosure

Wall	Position	Thickness	Material
D/S End of 7-BM Ratchet Wall	24892.4 mm		
D/S End of FOE (7-BM-A) Backwall	34584.2 mm	50 mm	Lead
Distance of Sidewall from straight CENTERLINE	805.6 mm	18 mm	Lead
Distance of Roof from straight CENTERLINE	2100.0 mm	4 mm	Lead

Table 1.2 Beamline Transport Pipe

Transport Pipe between FOE & SOE	ID = 5.75 inches (min) OD = 6.00 inches Material: Stainless Steel	Shielding Thickness = 5.0 mm Shielding Material: Lead Beampipe is 13.9 cm (y) above center line

Table 1.3 Endstation Enclosures (B&C share walls)

Wall	Position	Thickness	Material
U/S End of 7-BM-B Wall	43500 mm (z)	3 mm	Steel
D/S End of 7-BM-B Backwall	48500 mm (z)	6 mm	Steel
D/S end of 7-BM-C Backwall	52500 mm (z)	6 mm	Steel
Distance of inboard Sidewall from straight CENTERLINE (B&C)	1350 mm (x)	3 mm	Steel
Distance of outboard Sidewall from straight CENTERLINE (B&C)	2150 mm (x)	3 mm	Steel
Distance of Roof from straight CENTERLINE	2100 mm (y)	2 mm	Steel
D/S Wall beam stop location B hutch (395mm H x 560mmV)	48439.9 mm (U/S) Center +193mm (y)	12 mm	Lead
D/S Wall beam stop location C hutch (50cm x 50cm)	52482.0 mm (U/S) Center +273mm (y)	12 mm	Lead

Table 1.4 FE Components (SR-FE-3PW-4001, Ray Trace)

Shielding	Z location (Distance from S.S. center) (US), (DS)	Dimensions (specify units)		Offset (vertical or horizontal) Straight CENTERLINE	Material	Associated Drawings
		Outer dimensions (W)x(H)x(L)	Aperture (W)x(H) or (R) (MAX includes mfr &			

	or center		positional tolerance)			
Crotch Absorber	306.2cm (US)	26.44cm (x) 4.24body/1.40tip cm (y),4.445cm (z)	2.547cm (x) 1.392cm (y)	-0.319 (x)	Glidcop AL-15	SR-VA-ABS-1098
Exit Absorber	463.2cm (US)	6.93cm (x) 6.93cm (y) 1.91cm (z)	1.80cm (x) MAX 1.80cm (y) MAX Aperture .85 cm (x) offset from body ctr	0	Cu-Cr-Zr	SR-FE-3PW-ABS-0011
FM1	832.1cm (DS)	22.86cm (x) 15.24cm (y) 4.445cm(z)	DS & US (No Taper) 1.674cm (x) MAX 0.260cm (y) MAX	0	Cu-Cr-Zr	SR-FE-3PW-MSK-1824
LCO1	836.6cm (US)	41.25cm (x) MIN 12.5cm (y) MIN 30.0cm (z) MIN	Lead Aperture 3.348cm (x) MAX 1.824cm (y) MAX	0	Lead	SR-FE-3PW-CO-0400
Be Window	910.1cm (C)	15.24cm (x) 15.24cm (y) 0.254mm (z)	3.86cm (x) MAX 1.00cm (y) MAX	0	Glidcop with Beryllium foil in aperture	SR-FE-3PW-WIN-0250
X-Y Slit 1	973.6cm (C)	18.42cm (x) 19.37cm (y) 6.03cm (z)	Max opening (30mm H x 10 mm V) Minimum opening (-10mm overlap)	0	Cu-Cr-Zr	SR-FE-3PW-SLT-2011
X-Y Slit 2	1021.5cm (C)	18.42cm (x) 19.37cm (y) 6.03cm (z)	Max opening (30mm H x 10 mm V) Minimum opening (-10mm overlap)	0	Cu-Cr-Zr	SR-FE-3PW-SLT-2021
Collimating Mirror (Flat)	1170.0cm (Center)	10cm (x) 5cm (y) 70cm (z)	2.7 mrad pitch about center	0 (top surface centered on beam)	Silicon	PD-QAS-PCM-1000
FM2	1304.7cm (DS)	22.86cm (x) 15.24cm (y) 4.445cm(z)	DS: 3.225cm (x)MAX DS: 1.002cm (y)MAX Vert angle = 1 deg US: 1.075cm (y)MAX	+.73cm (y)	Cu-Cr-Zr	SR-FE-3PW-MSK-1825
Inboard Shadow Shield	1511.4cm (US)	17.5cm (x) MIN 30.0cm (y) MIN 30.0cm (z) MIN	No aperture	X = -7.62cm (outboard face)	Lead	SR-FE-3PW-4015
FM3	1578.4cm (DS)	22.86cm (x) 15.24cm (y) 4.445cm(z)	DS: 3.776cm (x)MAX DS: 1.086cm (y)MAX Vert angle = 1 deg US: 1.159cm (y)MAX	+2.21cm (y)	Cu-Cr-Zr	SR-FE-3PW-MSK-1826
Diagnostic flag	2038.4cm (C)	6cm (x)	No aperture	Centered on	Cu	PD-COM-DG-0100

(sketch)		4cm (y) 4cm (z)		beam when in		
Photon Shutter	2113.7cm (C)	15.24cm (x) 15.88cm (y) 3.175cm (z)	DS & US (No Taper) 5.334cm (x) 1.524cm (y) (aperture offset to part C/L, y = -2.50 cm)	Y=5.10cm to SR Beam Ht when open	Cu-Cr-Zr	SR-FE-3PW-PSH-0111
FM4	2145.3cm (DS)	22.86cm (x) 15.24cm (y) 4.445cm(z)	DS: 4.916cm (x)MAX DS: 1.261cm (y)MAX Vert angle = 1 deg US: 1.334cm (y)MAX	+5.27cm (y)	Cu-Cr-Zr	SR-FE-3PW-MSK-1827
LCO2	2149.9cm (US)	51.25cm (x) MIN 12.5cm (y) MIN 30.0cm (z) MIN	Lead Aperture 6.349cm (x) MAX 3.252cm (y) MAX	+5.27cm (y)	Lead	SR-FE-3PW-CO-0450
Safety Shutter1	2214.6cm (US)	17.5cm (x) MIN 17.5cm (y) MIN 30.0cm (z) MIN	Tube Aperture 9.4 cm (x) 3.4 cm (y)	Y=+5.62cm when open	Lead	SR-FE-3PW-SS-4000
Safety Shutter2	2278.6cm (US)	17.5cm (x) MIN 17.5cm (y) MIN 30.0cm (z) MIN	Tube Aperture 9.4 cm (x) 3.4 cm (y)	Y=+5.96cm when open	Lead	SR-FE-3PW-SS-4100
Lead in Ratchet wall RC0 (sketch)	2344.5cm (US)	205.0 cm (x) MIN 50.0 cm (y) MIN 25.0 cm (z) MIN	Lead Aperture 11.6 cm (x) MAX 6.8 cm (y) MAX	+6.47cm (y) Tube centerline	Lead	SR-FE-3PW-RCO-4000
Lead block RC1 (sketch)	2369.9cm (US)	40.0 cm (x) MIN 20.0 cm (y) MIN 5.0 cm (z) MIN	Lead Aperture 11.6 cm (x) MAX 6.8 cm (y) MAX	+6.47cm (y) Tube centerline	Lead	SR-FE-3PW-RCO-4000
RCO Concrete Block (sketch)	2457.5cm (DS)	28.9 cm (x) MIN 12.5 cm (y) MIN 72.0 cm (z) MIN	Concrete Aperture 11.6 cm (x) MAX 6.8 cm (y) MAX	+6.47cm (y) Tube centerline	Lead, concreate & HDPE	SR-FE-3PW-RCO-8180
RCO Lead Brick (sketch)	2489.2cm (DS)	28.9 cm (x) MIN 12.5 cm (y) MIN 30.0 cm (z) MIN	Lead Aperture 10.4 cm (x) MAX 5.5 cm (y) MAX	+6.47cm (y) Tube centerline	Lead, concrete & HDPE	SR-FE-3PW-RCO-8180

Table 1.5 Beamline FOE Components

Components	Z location (Distance from 3PW center) (U), (D) or center	Dimensions (specify units)		Offset (vertical or horizontal) w.r.t Straight CENTERLINE	Material	Associated Drawings
		Outer dimensions (W)x(H)x(L)	Aperture (W)x(H) or (R) (MAX includes mfr & positional tolerance)			
Fixed Mask (MSK1) See Sketch 3	2537.7 cm (U)	22.86cm (x) 15.24cm (y) 4.445cm(z)	US:6.35cm(x),2.15cm(y) DS:4.62cm(x),0.41cm(y) MAX	+7.385cm (y) At center	Cu-Cr-Zr	PD-QAS-MSK-1101
Bremsstrahlung	2546.5 cm	40.2 cm (x)	5.782 cm (x) MAX	5.4 mrad	Lead	PD-QAS-CO-0100

Stop (CO1/BRS)	(U)	14.84 cm (y) 30.0 cm (z)	1.474 cm (y) MAX	pitch +7.516cm (y) at center		
Slits – Vertical (2 individual blades)	2612.6 cm (US-tungsten)	6.5cm (x) 4.5cm (y) 0.4cm (z) (Blade size)	10mm overlap – closed 10mm aperture – open	Center 7.8cm above GB centerline	Tungsten blade with copper plate for cooling	PD-QAS-SLT-1000
Slits – Horizontal (2 individual blades)	2625.0cm (US-tungsten)	4.5cm (x) 6.5cm (y) 0.4cm (z) (Blade size)	10mm overlap – closed 60mm aperture - open	Center 7.8cm above GB centerline	Tungsten blade with copper plate for cooling	PD-QAS-SLT-1000
Fixed Mask (MSK2) See Sketch 3	28135 mm (U)	22.86cm (x) 15.24cm (y) 4.445cm(z)	US:6.01cm(x),2.06cm(y) DS:4.28cm(x),0.32cm(y) MAX	+8.86cm (y) at center	Cu-Cr-Zr	PD-QAS-MSK-1201
DCM 1st crystal (MONO) See sketch 5	2854.1 cm (C)	50mm × 5mm × 16mm (z) (rotated@ 30 deg max)	No aperture	Top surface at +9.09cm (y)	Silicon	PD-QAS-MONO-1000
DCM 2nd crystal (MONO) See sketch 5	2857.9 cm (C)	50mm × 3mm × 71mm (z) (rotated@ 30 deg max)	No aperture	Bottom surface offset 3.75mm +y, w.r.t. 1st crystal	Silicon	PD-QAS-MONO-1000
Mono diagnostic screen	2864.67 cm (U)	8.89cm (x) 2.54cm (y) 1.90cm (z)	No aperture	+9 cm	Cu	
Pink Beam stop (PBS1) See sketch 4	2890.4 cm (U)	22.86cm (x) 15.24cm (y) 4.445cm(z)	US:6.01cm(x),1.055cm(-y) DS:4.28cm(x), 1.87mm(-y),10.4mm(+y) MAX	+10.0cm (y)	Cu-Cr-Zr	PD-CMS-MSK-1301
Mono beam Mirror (PFM) See sketch 6	3000.0 cm (C)	1000mm (z) × 100mm (x) × 60 mm (y) (rotated@ 2.135 mrad max)	42.7mm radius of curvature (60mm curvature width)	center of reflecting surface +105.8mm (y)	ULE Glass	PD-QAS-PFM-1000
Diagnostic screen	3318.766 cm (U)	6.0 cm (x), 3.0 cm (y) 0.5 cm (z)	No aperture	+13.0cm (y)	Cu	
Shutter (PSH)	3359.8 cm (U)	12.5 cm W × 15 cm H× 3.8 cm	60 mm × 30 mm	+13.3cm (y)	Tungsten	PD-COM-PSH-2100
Guillotine	3445.390 cm (U)	55.88 cm W × 55.88 cm H × 5.00 cm	152.4 mm (6″) diameter	guillotine and aperture	Lead	7-BM-A Guillotine

				+13.9 cm up		
Hutch wall opening & collar square	3452.85cm (U)	Collar dimensions 30cm W x 30 cm H x 1cm Z	9″ diameter wall opening	+13.9 cm (y) above centerline	Lead	Hutch wall and shielded pipe collar

Front End Fixed Masks

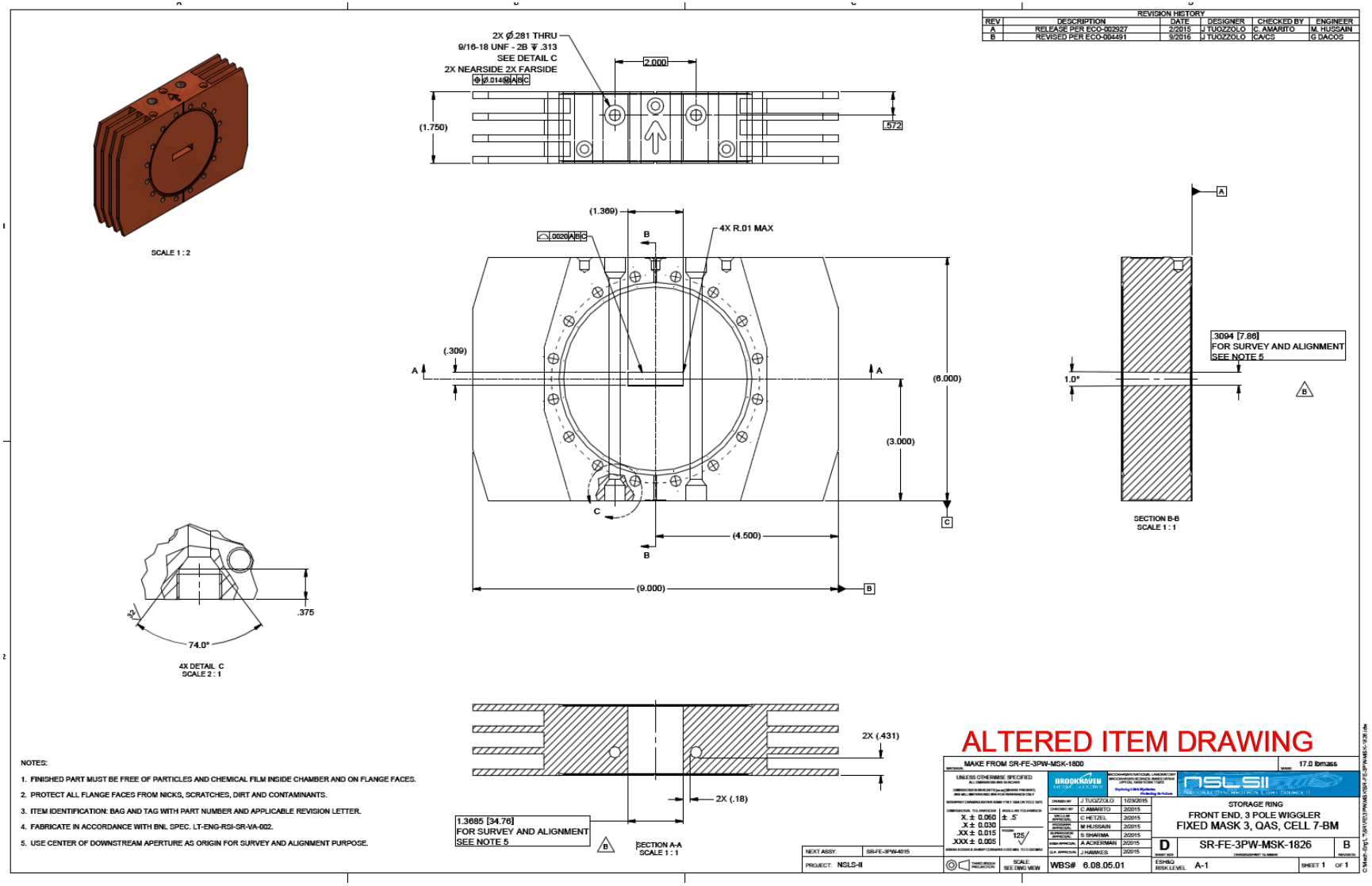

Ratchet Wall Collimator

NOTES:

1. SURVEY AND ALIGN CHASSIS ASSEMBLY IN RATCHET WALL PENETRATION BEFORE ADDING ADDITIONAL SHIELDING AROUND CHASSIS. FINAL POSITION OF COMPONENTS TO BE LOCATED BY SURVEY GROUP.
2. PROTECT KNIFE EDGES. PLASTIC CAP OR BLANK SHOULD REMAIN ON FLANGE UNTIL ASSEMBLY OF VACUUM COMPONENTS. FLANGE REQUIREMENTS: THE TIGHTENING PROCESS MUST BE DONE GRADUALLY IN 1/4 TO 1/2 TURN INCREMENTS IN AN ALTERNATING CRISS-CROSS PATTERN UNTIL 15 FT-LB FOR 5/16 HARDWARE, OR 12 FT-LB FOR 1/4 HARDWARE, IS ACHIEVED.
3. LEAD BRICKS MUST BE INSTALLED AS SHOWN. REFER TO BRICK COLOR REFERENCE TABLE. (LEAD BRICK COLORS ON DRAWING ARE A VISUAL AID FOR ASSEMBLY ONLY, AND DO NOT REFLECT ACTUAL FINISHED COLOR OF BRICKS). RE-INSTALL EXISTING RATCHET LEAD BLOCK WHEREVER POSSISSIBLE, DENOTED BY GREY COLOR.
4. INSTALL CONCRETE BLOCK OR HDPE SHEETS TO MINIMIZE CLEARANCE BETWEEN PENETRATION WALLS AND RATCHET WALL COLLIMATOR. GAP MAY BE LARGER DUE TO SKEWED INSTALLATION OF WALL PENETRATION SLEEVES RELATIVE TO BEAMLINE AXIS. INSTALL ADDITIONAL HDPE FILLER SHIMS, 4" DEEP, TO MINIMIZE GAPS, WHEREVER POSSIBLE.
5. SOME PARTS LISTED ON THE B.O.M., INCLUDING THOSE WITH QTY A/R AND CONCRETE BLOCK, ARE FOR REPRESENTATION ONLY. ACTUAL MATERIAL THICKNESS IS DETERMINED BY FIELD MEASUREMENTS, DURING ASSEMBLY, TO MEET MINIMUM CLEARANCE REQUIREMENTS.
6. RATCHET LEAD ORIGINALLY INSTALLED PER CONVENTIONAL FACILITIES DIVISION, PER TORCON DRAWING 08301-1007-1. RATCHET LEAD GAP SPECS ARE DUPLICATED, FOR THIS ASSEMBLY.
7. DESIGNED IN ACCORDANCE WITH LT-C-ASD-RSI-SR-001, "PERFORMANCE REQUIREMENTS, ENGINEERING SPECIFICATIONS, AND INTERFACE CONTROL (RSI) FOR SUPPLEMENTAL SHIELDING DESIGN DOCUMENT (SSDS) FOR THE BST-P2 AND STORAGE RING" AND LT-EDP-013-026, "ENGINEERING DESIGN PLAN (EDP) FOR SUPPLEMENTAL SHIELDING FOR THE BST-P2 AND STORAGE RING".

REVISION HISTORY

REV	DESCRIPTION	DATE	DESIGNER	CHECKED BY	ENGINEER
A	RELEASE PER ECO-004353	7/2016	R. GAMBELLA	CACS	M. BREITFELLER

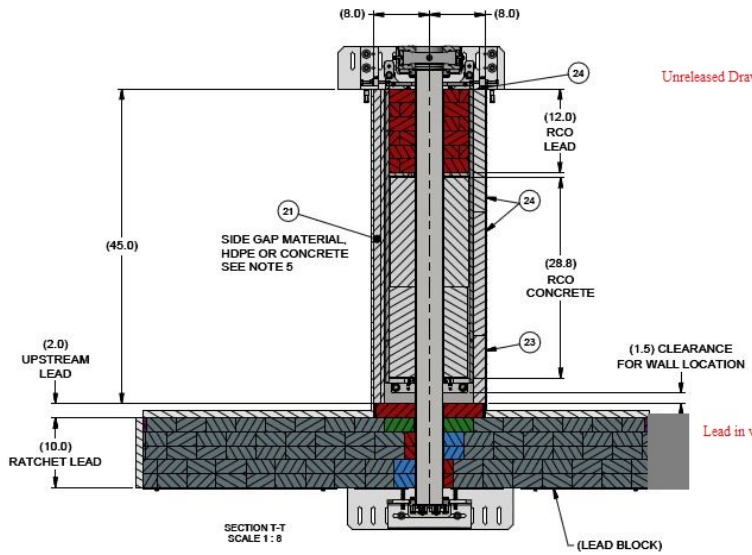

Unreleased Drawing

Lead in wall is wider, by 8-1/2"

SECTION T-T
SCALE 1 : 8

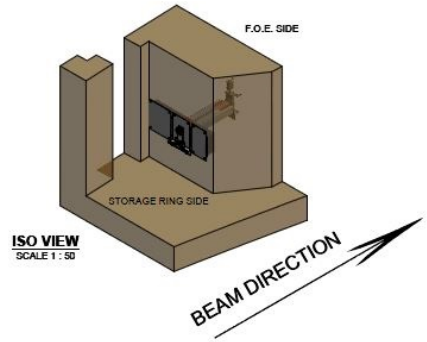

ISO VIEW
SCALE 1 : 50

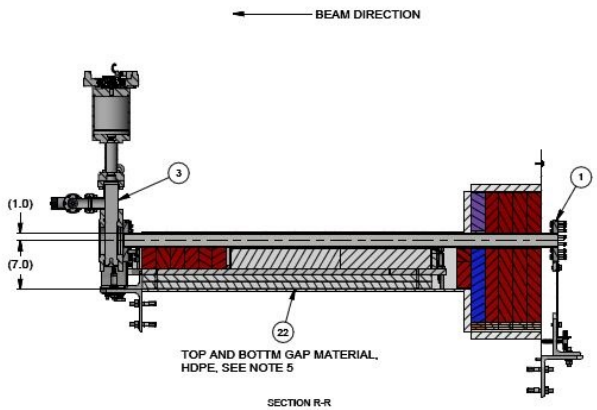

SECTION R-R
SCALE 1 : 8

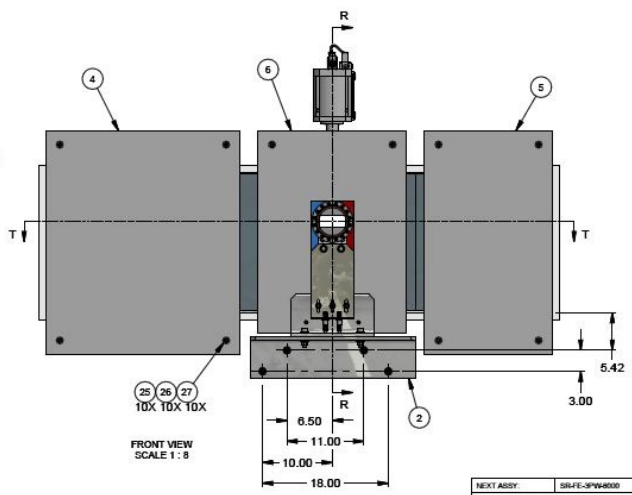

FRONT VIEW
SCALE 1 : 8

ITEM	QTY	PART NUMBER	DESCRIPTION	MATERIAL
27	10	ANSI B18.22.1 - 1/4	Plain Washer	Steel, Mild, Zinc Pl
26	10	ANSI B18.21.1 - 1/4	Helical Spring Lock Washers	Steel, Mild, Zinc Pl
25	10	ANSI B18.2.1 - 1/4-20 UNC - 1	Hex Cap Screw	Steel, Mild, Zinc Pl
24	2	PI-BLK-0006	SOLID CONCRETE BLOCK, 2" X 8" X 18"	CONCRETE, DENSITY OF 120 LBS PER CU FT
23	1	SR-FE-RCO-0700-01	SOLID CONCRETE BLOCK	Concrete
22	A/R	SR-FE-3PW-RCO-1096	BASE PLATE SUPPORT	HIGH DENSITY POLYETHYLENE SHEET
21	A/R	SR-FE-RCO-0701	SIDE PLATE SHIELD	HIGH DENSITY POLYETHYLENE SHEET
20	A/R	SR-FE-RCO-0515	LEAD, RATCHET SHIM	Lead, Per ASTM B29 & ASTM B749
19	4	SR-FE-3PW-RCO-8086	LEAD, BLOCK & INSERT ASSY	
18	4	SR-FE-3PW-RCO-8084	LEAD, BLOCK & INSERT ASSY	
17	2	SR-FE-3PW-RCO-8082	LEAD, BLOCK & INSERT ASSY	
16	2	SR-FE-RCO-0517	LEAD, BLOCK	Lead, Per ASTM B29 & ASTM B749
15	3	SR-FE-RCO-0514	LEAD, BLOCK	Lead, Per ASTM B29 & ASTM B749
14	2	SR-FE-3PW-RCO-8087	LEAD, BLOCK	LEAD BRICK PER ASTM B29-03 (2009) GRADE L50049
13	2	SR-FE-3PW-RCO-8085	LEAD, BLOCK	LEAD BRICK PER ASTM B29-03 (2009) GRADE L50049
12	1	SR-FE-3PW-RCO-8083	LEAD, BLOCK	LEAD BRICK PER ASTM B29-03 (2009) GRADE L50049
11	1	SR-FE-3PW-RCO-8081	LEAD, BLOCK	LEAD BRICK PER ASTM B29-03 (2009) GRADE L50049
10	3	SR-FE-3PW-RCO-3088	LEAD, SPACER	LEAD BRICK PER ASTM B29-03 (2009) GRADE L50049
9	12	SR-FE-3PW-RCO-3087	LEAD, SPACER	LEAD BRICK PER ASTM B29-03 (2009) GRADE L50049
8	1	SR-FE-RCO-1585	PLATE, BRIDGE	STAINLESS STEEL
7	1	SR-FE-RCO-1082	PENETRATION LINER	STAINLESS STEEL
6	1	SR-FE-3PW-RCO-8567	COVER PLATE	Steel, Mild
5	1	SR-FE-3PW-RCO-8555	COVER PLATE	Steel, Mild
4	1	SR-FE-3PW-RCO-8554	COVER PLATE	Steel, Mild
3	1	SR-FE-RCO-3880	F.O.E. GATE VALVE ASSEMBLY	
2	1	SR-FE-RCO-3890	RCO UPSTREAM TUBE SUPPORT ASSY	
1	1	SR-FE-3PW-RCO-8180	RATCHET WALL COLLIMATOR	

PARTS LIST

UNLESS OTHERWISE SPECIFIED
ALL DIMENSIONS ARE IN INCHES
DIMENSIONS IN BRACKETS [mm] [DENOTE PRE-BENT] AND MILL BEFORE/AND AND FOR REFERENCE ONLY
INTERPRET DIMENSIONS AND TOLS PER ASME Y14.5 SAME AS ISO 2768
DIMENSIONAL TOL MINIMUM: X. ± 0.060, .X ± 0.030, .XX ± 0.015, .XXX ± 0.005
ANGULAR TOL MINIMUM: ± .5°
FINISH: 125/
BREAK ACCESS & SHARP CORNERS 0.005 MIN. TO 0.030 MAX

BROOKHAVEN NATIONAL LABORATORY
RECOMMENDED VENDOR, MANDATORY RECOMMENDED VENDOR, OR OPTIONAL VENDOR FOR TYPE
Exploring Life's Mysteries
Probing the Future

NSLS-II
NATIONAL SYNCHROTRON LIGHT SOURCE II

DRAWN BY	R. GAMBELLA	3/4/2016
CHECKED BY	CACS	7/2016
MFG APPROVAL	F. DEPAOLA	7/2016
ENGINEERING APPROVAL	M. BREITFELLER	7/2016
SUPERVISOR APPROVAL	S. SHARMA	7/2016
HSM APPROVAL	A. ACKERMAN	7/2016
QA APPROVAL	J. HAWKES	7/2016

STORAGE RING
FRONT END, 3PW, RCO
RATCHET WALL COLLIMATOR

D — SR-FE-3PW-RCO-4000 — A
SHEET REV — DRAWING NO — REVISION

ESH&Q RISK LEVEL: A1
SHEET 1 OF 3

NEXT ASSY: SR-FE-3PW-8000
PROJECT: NSLS-II
THIRD ANGLE PROJECTION
SCALE: SEE DWG VIEW
WBS# 7.03.05.01

C:\Mast-Eng_TASKVIEW\PWRCO\SR-FE-3PW-RCO-8000.dwg

Front End Photon Shutter Design

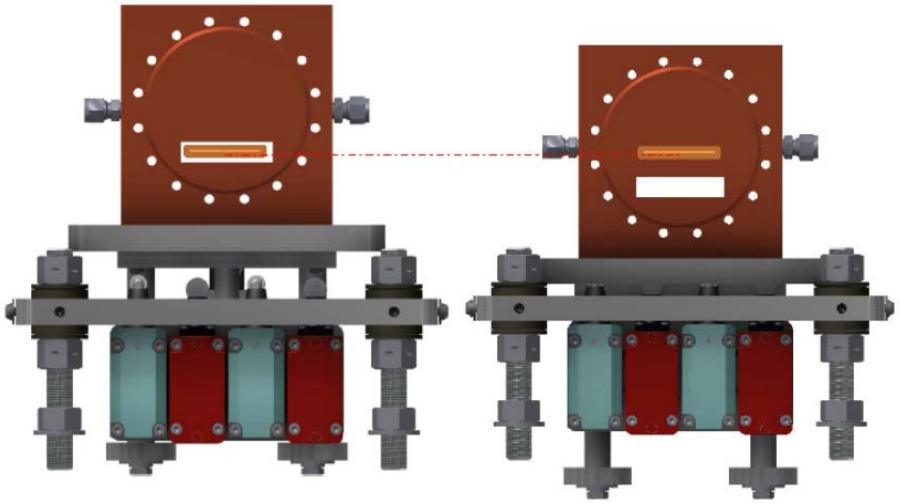

Photon Shutter Open Position ***Photon Shutter Closed Position***

Front End Slits

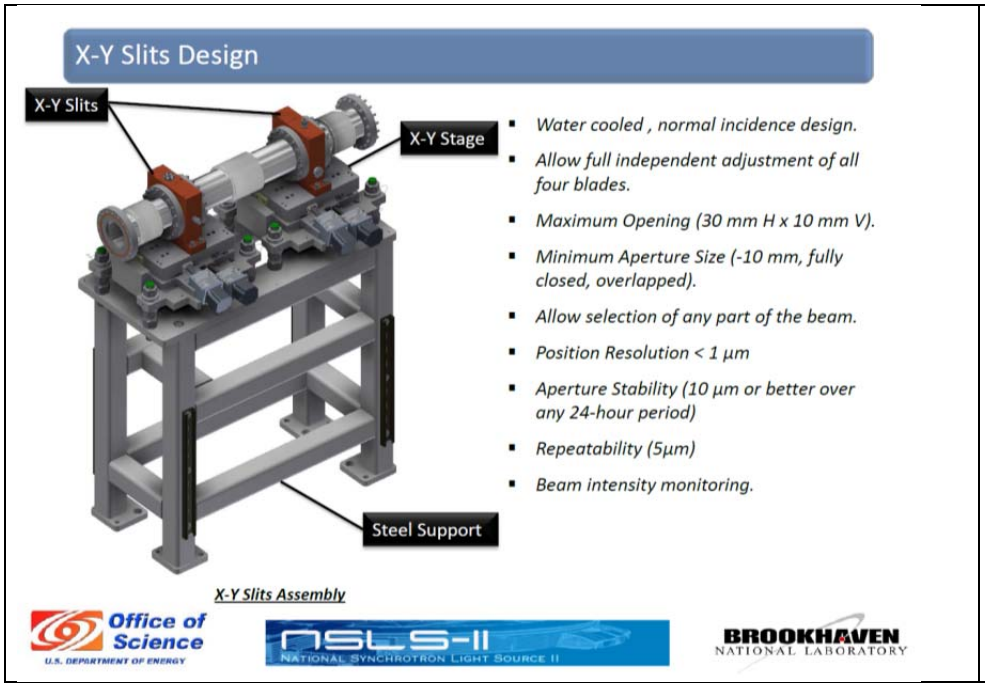

X-Y Slits Assembly

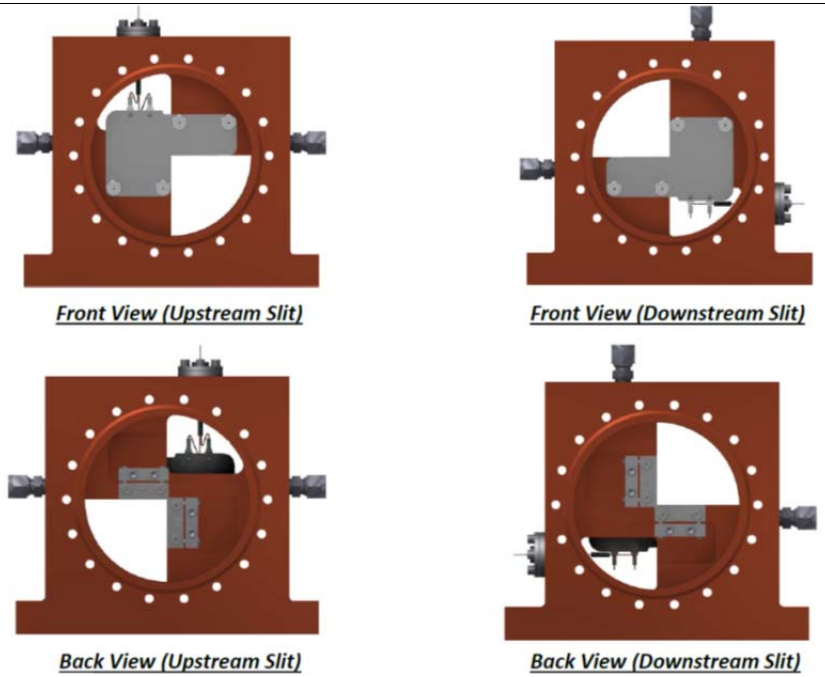

Front View (Upstream Slit) ***Front View (Downstream Slit)***

Back View (Upstream Slit) ***Back View (Downstream Slit)***

Sketch 1 (FE diagnostic flag)

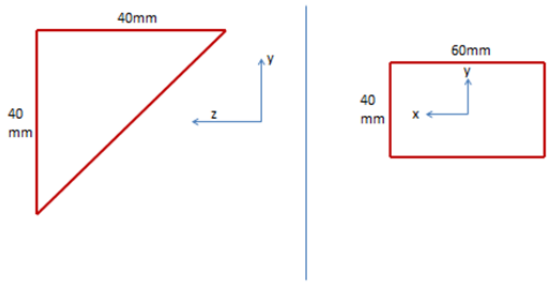

Sketch 2 (RWC) hor

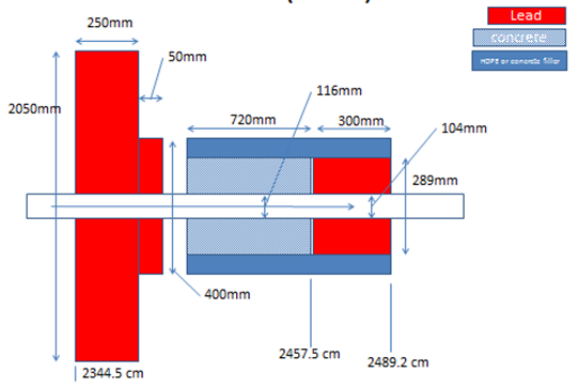

Sketch 2 (RWC) vert

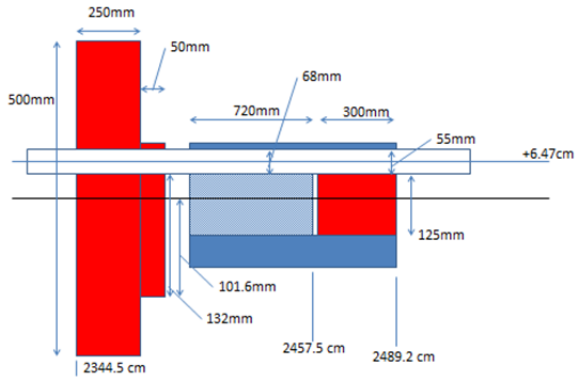

Sketch 3: Beamline MSK1 & 2

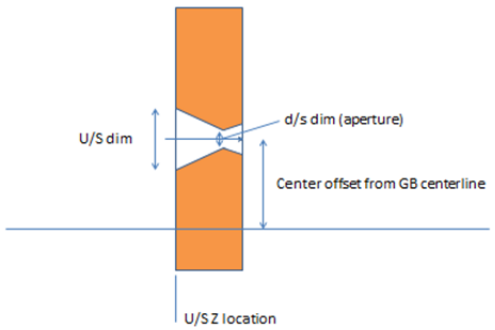

Sketch 4: Beamline PBS1 vert

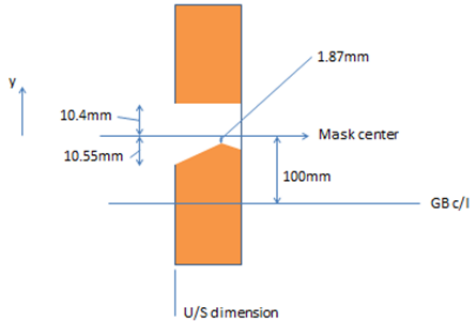

Sketch 5: Mono crystal

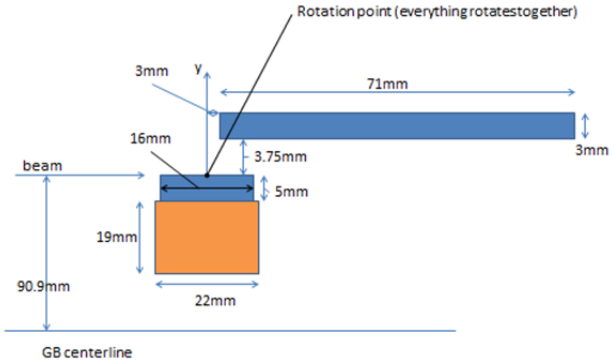
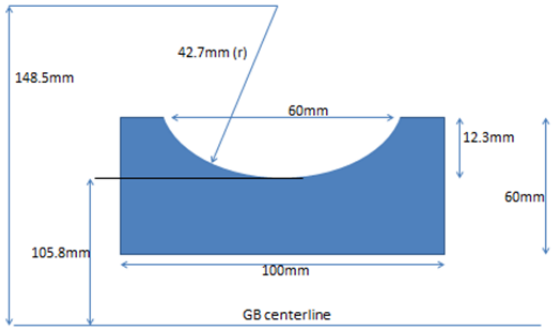
Sketch 6: Focusing mirror