XFM & QAS Source & Front End Overview for IRR

Gregory Fries, NSLS-II Accelerator Division Project Engineer

XFM & QAS IRR

August 30-31, 2017

U.S. DEPARTMENT OF ENERGY | Office of Science

BROOKHAVEN NATIONAL LABORATORY
BROOKHAVEN SCIENCE ASSOCIATES

Outline

- Scope
- Machine Status & Operating Schedule
- Source Specs, Layouts, Installation & Readiness
- Front End (FE) Details
- Differences in Bending Magnet (BM) Front Ends
- Front End Layouts, Installation & Readiness
- Radiation Safety
- Source & FE Commissioning Plan
- Conclusion

Scope

- XFM (4-BM) Source
  - One 3-pole wiggler (3PW)
- QAS (7-BM) Source
  - One 3-pole wiggler (3PW)
- XFM Front End
  - Bending magnet (BM) front end
- QAS Front End
  - Bending magnet (BM) front end
  - Front end mirror covered in beamline presentation

Machine Status & Shutdown Schedule

- Installation, testing & commissioning dependent upon operating schedule
- NSLS-II beamline operations in process
- Three machine shutdowns per year (4-5 weeks each)
  - Dec/Jan
  - April/May
  - August
- Typically a two-day maintenance period every third week & a studies period every week during operations
- Minor installation & testing during maintenance days
- Installation completed during Aug ‘17 shutdown
- Commissioning scheduled for Sept ‘17

Operating Schedule

September-17						
Day	Half Shifts					
	0-4	4-8	8-12	12-16	16-20	20-24
1	D	D	D	D	D	D
2	D	D	D	D	D	D
3	D	D	D	D	D	D
4	D	D	D	D	D	D
5	D	D	S	S	S	S
6	S	S	S	S	S	S
7	S	S	S	S	S	S
8	S	S	O	O	O	O
9	O	O	O	O	O	O
10	O	O	O	O	O	O
11	O	O	O	O	O	O
12	O	O	O	O	O	O
13	O	O	O	O	O	O
14	O	O	O	O	O	O
15	O	O	O	O	O	O
16	O	O	C	C	C	C
17	C	C	C	C	C	C
18	C	C	O	O	O	O
19	O	O	O	O	O	O
20	O	O	O	O	O	O
21	O	O	O	O	O	O
22	O	O	O	O	O	O
23	O	O	O	O	O	O
24	O	O	O	O	O	O
25	O	O	I	I	S	S
26	S	S/M	M	M	M	M
27	M	M	M	M	M/S	S
28	S	S	O	O	O	O
29	O	O	O	O	O	O
30	O	O	O	O	O	O

October-17						
Day	Half Shifts					
	0-4	4-8	8-12	12-16	16-20	20-24
1	O	O	O	O	O	O
2	O	O	O	O	O	O
3	O	O	O	O	O	O
4	O	O	O	O	O	O
5	O	O	O	O	O	O
6	O	O	O	O	O	O
7	O	O	C	C	C	C
8	C	C	C	C	C	C
9	C	C	O	O	O	O
10	O	O	O	O	O	O
11	O	O	O	O	O	O
12	O	O	O	O	O	O
13	O	O	O	O	O	O
14	O	O	O	O	O	O
15	O	O	O	O	O	O
16	O	O	I	I	S	S
17	S	S/M	M	M	M	M
18	M	M	M	M	M/S	S
19	S	S	S	O	O	O
20	O	O	O	O	O	O
21	O	O	O	O	O	O
22	O	O	O	O	O	O
23	O	O	O	O	O	O
24	O	O	O	O	O	O
25	O	O	O	O	O	O
26	O	O	O	O	O	O
27	O	O	O	O	O	O
28	O	O	C	C	C	C
29	C	C	C	C	C	C
30	C	C	O	O	O	O
31	O	O	O	O	O	O

November-17						
Day	Half Shifts					
	0-4	4-8	8-12	12-16	16-20	20-24
1	O	O	O	O	O	O
2	O	O	O	O	O	O
3	O	O	O	O	O	O
4	O	O	O	O	O	O
5	O	O	O	O	O	O
6	O	O	I	I	S	S
7	S	S/M	M	M	M	M
8	M	M	M	M	M/S	S
9	S	S	S	O	O	O
10	O	O	O	O	O	O
11	O	O	O	O	O	O
12	O	O	O	O	O	O
13	O	O	O	O	O	O
14	O	O	O	O	O	O
15	O	O	C	C	C	C
16	C	C	C	C	C	C
17	C	C	O	O	O	O
18	O	O	O	O	O	O
19	O	O	O	O	O	O
20	O	O	O	O	O	O
21	O	O	O	O	O	O
22	O	O	S	S	S	S
23	S	S	S	S	S	S
24	S	S	S	S	S	S
25	S	S	S	S	S	S
26	S	S	S	S	S	S
27	S	S	S	O	O	O
28	O	O	O	O	O	O
29	O	O	O	O	O	O
30	O	O	O	O	O	O

O	Accelerator Operations
S	Studies
M	Maintenance
C	Commissioning
I	Interlock Certification
D	Shutdown
	Lab Holiday
N	Monday

Shifts for XFM & QAS Commissioning

Source Specifications Comparison

Beam Line	Project	Type	Design	Beamport	Length [m]	Peak Field [T]	Mag Gap [mm]	FE Aper	Total Power [kW]
XFP	Partner	3PW	PMW	Near 2nd dipole	0.25	1.14	28	3.0 x 0.4	0.32
CMS	Partner	3PW	PMW	Near 2nd dipole	0.25	1.14	28	3.0 x 0.4	0.32
BMM	Partner	3PW	PMW	Near 2nd dipole	0.25	1.14	28	3.0 x 0.4	0.32
XFM	Partner	3PW	PMW	Near 2nd dipole	0.25	1.14	28	3.0 x 0.4	0.32
QAS	Partner	3PW	PMW	Near 2nd dipole	0.25	1.14	28	3.0 x 0.4	0.32

- XFM & QAS 3PWs are identical to the ones at XFP, CMS, & BMM

3PW Layout

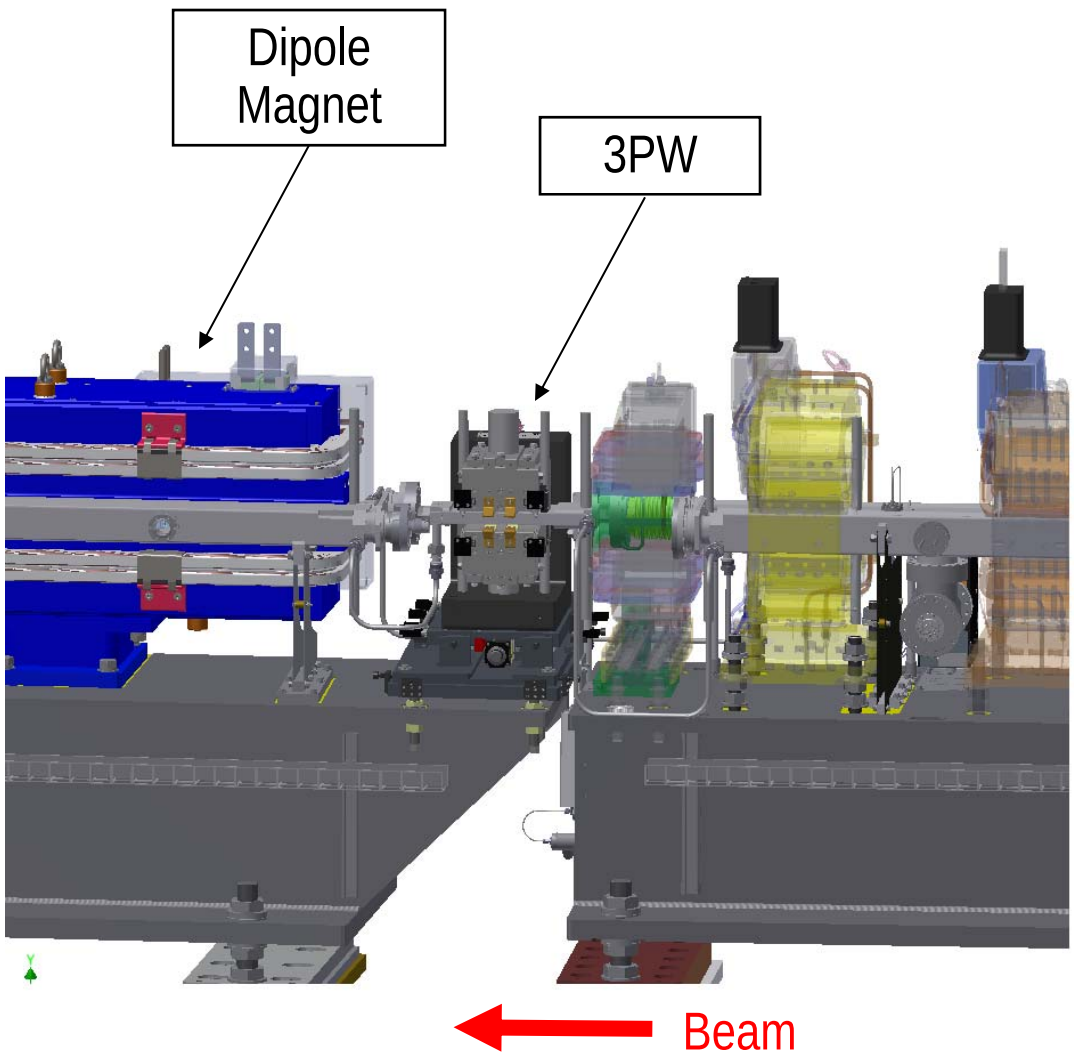

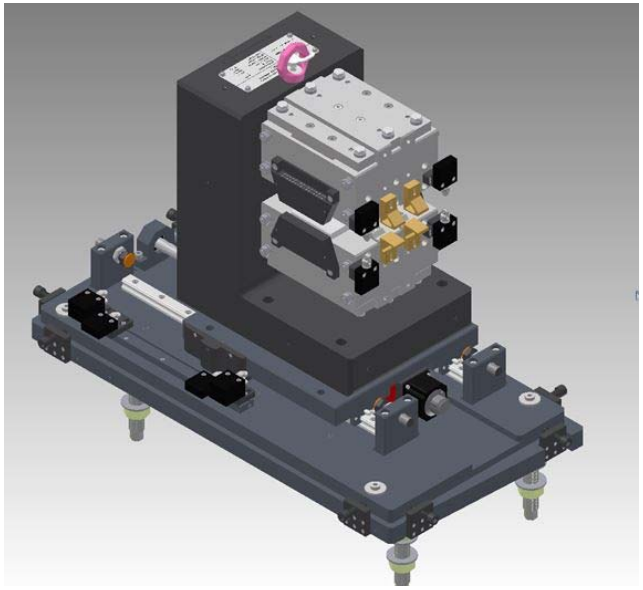

3PW Assembly

Courtesy of J. Rank

3PW Development

- ADC manufactured a prototype in 2012 as part of NSLS-II project
- Prototype was measured at BNL by ID group
- Installation was removed from NSLS-II scope
- Design changes & optimizations were made
- Final design review occurred in March '15
- Batch of six 3PWs built in-house
- Machined components made at central shop
- Magnets procured & then characterized at BNL
- Final assembly & magnetic measurement at BNL
- XFP & CMS 3PWs installed in May '16 & successfully commissioned in July/Aug '16
- BMM 3PW installed in Dec '16 & commissioned in June '17

ADC Prototype

Source Installation

- April/May '17 Shutdown
  - Installed 3PWs into SR tunnel
  - Installed rack electronics
  - Pulled & terminated cables
  - Rough surveyed 3PWs
  - Locked out 3PWs until IRR approval
- August '17 Shutdown
  - Final surveyed 3PWs
  - Tested controls In-situ
  - Locked out 3PWs until IRR approval

Note that 3PW is locked fully retracted

XFM & QAS 3PWs

ACTIONS	
• Specifications defined.	✓
• Design complete.	✓
• Design reviews completed and all actions resolved.	✓
• Devices under configuration management.	✓
• Magnetic fields measured.	✓
• Mechanical travel tested.	✓
• Water flow measured.	N/A
• EPS tested.	N/A
• Travelers developed and approved.	✓
• Travelers completed.	✓

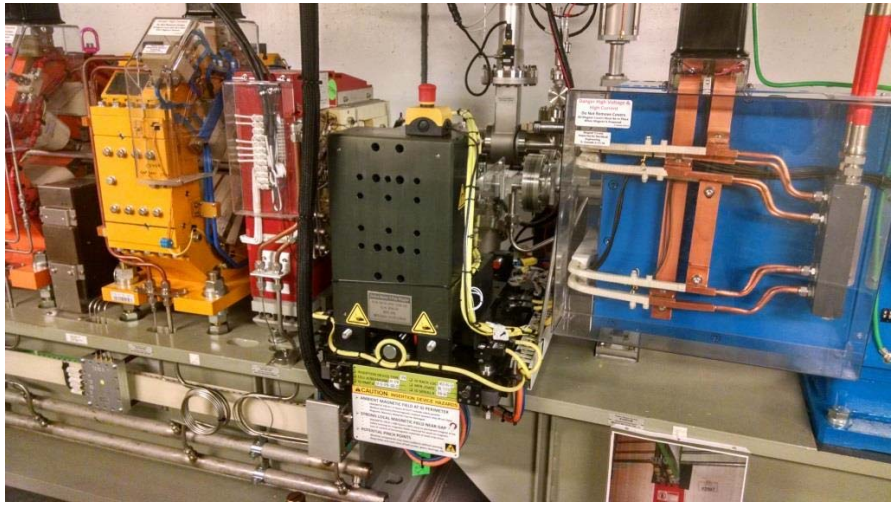

XFM

QAS

- Note that there is no cooling water to 3PW & no tie-in to EPS

Front End Details

- A front end delivers the photon beam to the beamline while controlling the sizes of both the synchrotron and bremsstrahlung radiation fans.
- The fixed mask shadows the vacuum chambers of downstream collimators and safety shutters for beam deviations controlled by active interlock.
- Lead collimators trim the Bremsstrahlung fan exiting to beamlines.
- Photon shutter is used to stop the photon beam in order to protect the uncooled safety shutters.
- The safety shutters block the bremsstrahlung radiation from exiting through the ratchet wall collimator chamber opening.
- The photon shutter & safety shutters are locked out. (Centrally controlled LOTO)
- XFM & QAS are same design as XFP, CMS, & BMM, which do contain design differences from the insertion device (ID) front ends

Major Differences in BM front ends

- Mirror located in front end (beamline component; not all BM FEs)
- Additional gate valves to isolate mirror
- Additional fixed masks to shadow collimators
- Additional shadow shield for line of sight
- Slits contain current measuring devices (same x-y stage)
- Larger aperture
- Beryllium window isolates SR & BL vacuum (not all BM FEs)
- Fixed masks, slits, & photon shutter are Cu-Cr-Zr instead of Glidcop
- New safety shutter design
- Different diagnostic flag (beamline component; not all BM FEs)
- Different locations for typical components (i.e. slits further upstream)
- Formal final design review of BM front end was held in June ‘15

XFM Front End Layout

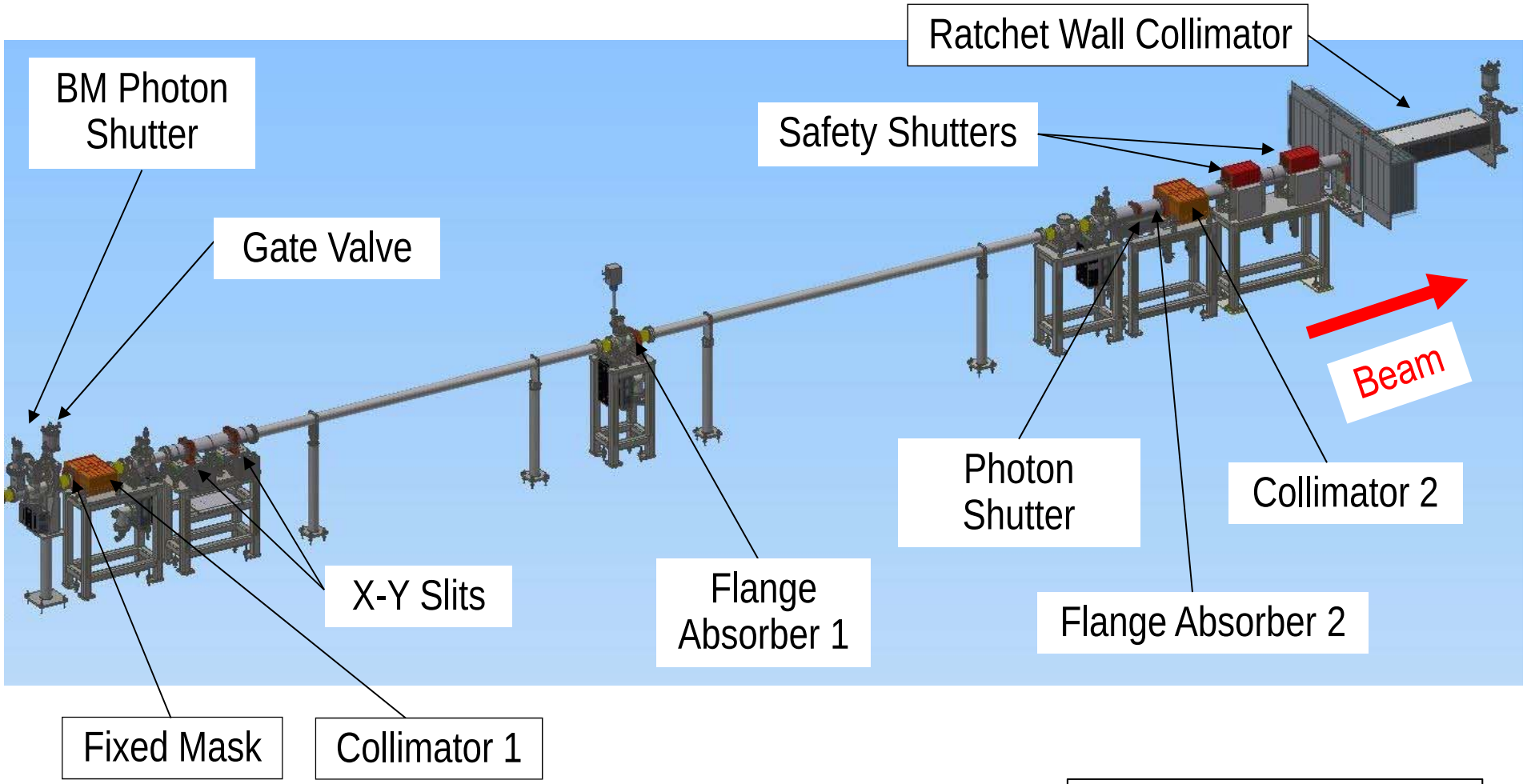

Courtesy of M. Breitfeller

QAS Front End Layout

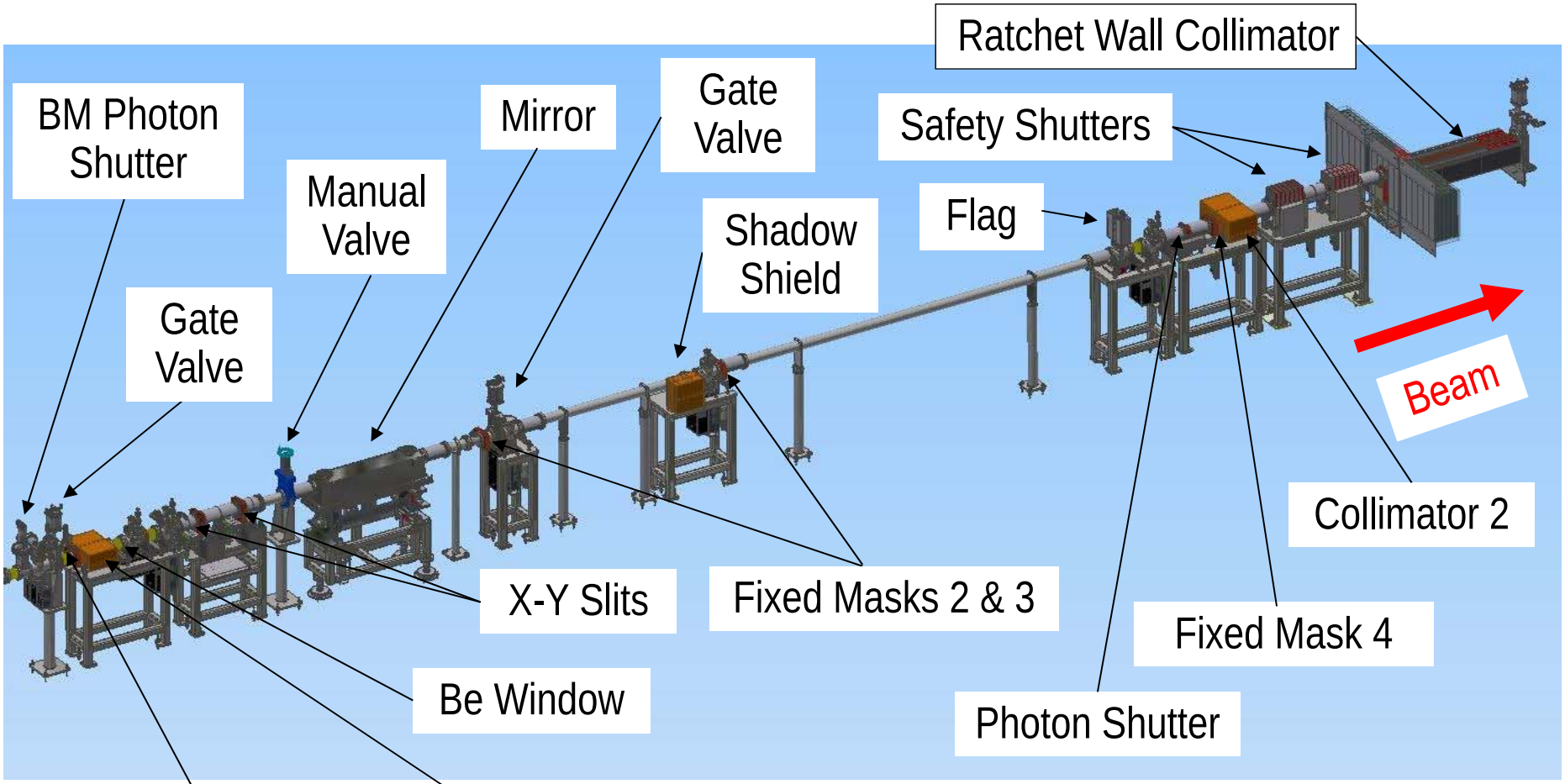

Courtesy of M. Breitfeller

Radiation Safety & Top-Off

- Radiation safety components:
  - Fixed masks (all)
  - Collimators #1 & #2
  - Flange Absorbers #1 & #2 (XFM)
  - Shadow shield (QAS)
  - Safety shutters #1 & #2
  - Ratchet wall collimator
- Top-Off components:
  - Exit Absorber (QAS)
  - Fixed mask #1
  - Collimator #2 (XFM)
- Credited controls include all shielding & PPS components
- Removal or modification of any device under configuration control requires an approved PS safety system work permit

XFM & QAS Front End Installation

- April/May '17 Shutdown
  - Installed ratchet wall collimator, safety shutters & exit pipe
  - Installed front end stand assemblies & mirror
  - Pulled & terminated cables
  - Plumbed DI water & compressed air
  - Tied-in front ends into EPS & PPS
  - Tested subassemblies In-situ
  - Locked out shutters until IRR approval
- August '17 Shutdown
  - Made final vacuum connections
  - Baked & final surveyed front end
  - Final controls & EPS testing
  - Locked out shutters until IRR approval

XFM & QAS Front Ends

ACTIONS	
• Ray tracings complete.	✓
• Design drawings complete.	✓
• Vacuum system complete.	✓
• Final survey complete.	✓
• Devices under configuration management.	✓
• Integrated testing complete.	✓
• Water flow measured.	✓
• Travelers complete.	✓
• Top-off analysis complete.	✓
• EPS verification.	✓
• PPS verification.	✓

XFM

QAS

Commissioning Plan

- Commissioning scheduled for Sept. '17 for XFM & QAS
- Commissioning studies time has been reserved
- Commissioning effort will include staff from Operations, Physics, Insertion Device, Front End, and Diag. groups
- Software controls & tools already developed and verified during NSLS-II beamline commissioning
- Procedures released for ID & FE commissioning sequence and radiation survey plan
- FE similar design to XFP, CMS & BMM
- 3PW identical to XFP, CMS & BMM

BM Front End Commissioning

- Insert 3PW
- Photon shutter & safety shutters remain locked out
- Beam current below 2 mA
- Verify orbit and characterize/correct lattice
- General radiation surveys
- Align the photon beam using signals from FE slits & QAS flag
- Adjust mirror positions (QAS)
- Observe photon beam on beam diagnostics
- Record slit & mirror positions with respect to beam center
- Condition vacuum
- Radiation survey (fault study)
- Hold point – before increasing current

Beam Current Increase Plan

- Obtain authorization to increase current to 120 mA
- Photon shutter & safety shutters remain locked out
- Evaluate and record current machine state
- Gradually increase current
- Verify active interlock system being engaged
- Monitor and verify orbit, tunes, lattice, vacuum, temperature
- Hold Point – Radiation survey
  - Phase 1 (slits open)
  - Phase 2 (slits closed)
  - QAS Phase 2a (mirror out); Phase 2b (mirror in, slits open)
  - Phase 3 (fault studies)
- Beam conditioning
- Repeat to allowable current

Conclusion

- XFM & QAS 3PWs & front ends installed & tested
- Radiation components under configuration control
- Assembly drawings, ray tracings, procedures, & travelers are available
- Photon shutter & safety shutters are locked in the down position
- 3PWs are locked out (fully retracted) until commissioning starts
- XFM & QAS 3PWs & front ends are ready for commissioning
- No self-identified pre-starts
- Commissioning experience & prepared commissioning procedures from previous 3PWs and BM front ends