X-ray Footprinting (XFP) beamline update

First Light: July 2016
First General User: June 2017
First Paper: July 2016

Jen Bohon, XFP Lead Beamline Scientist
Case Western Reserve University Center for Synchrotron Biosciences

NSLS-II SAC Meeting, September 19th, 2017

X-ray Footprinting

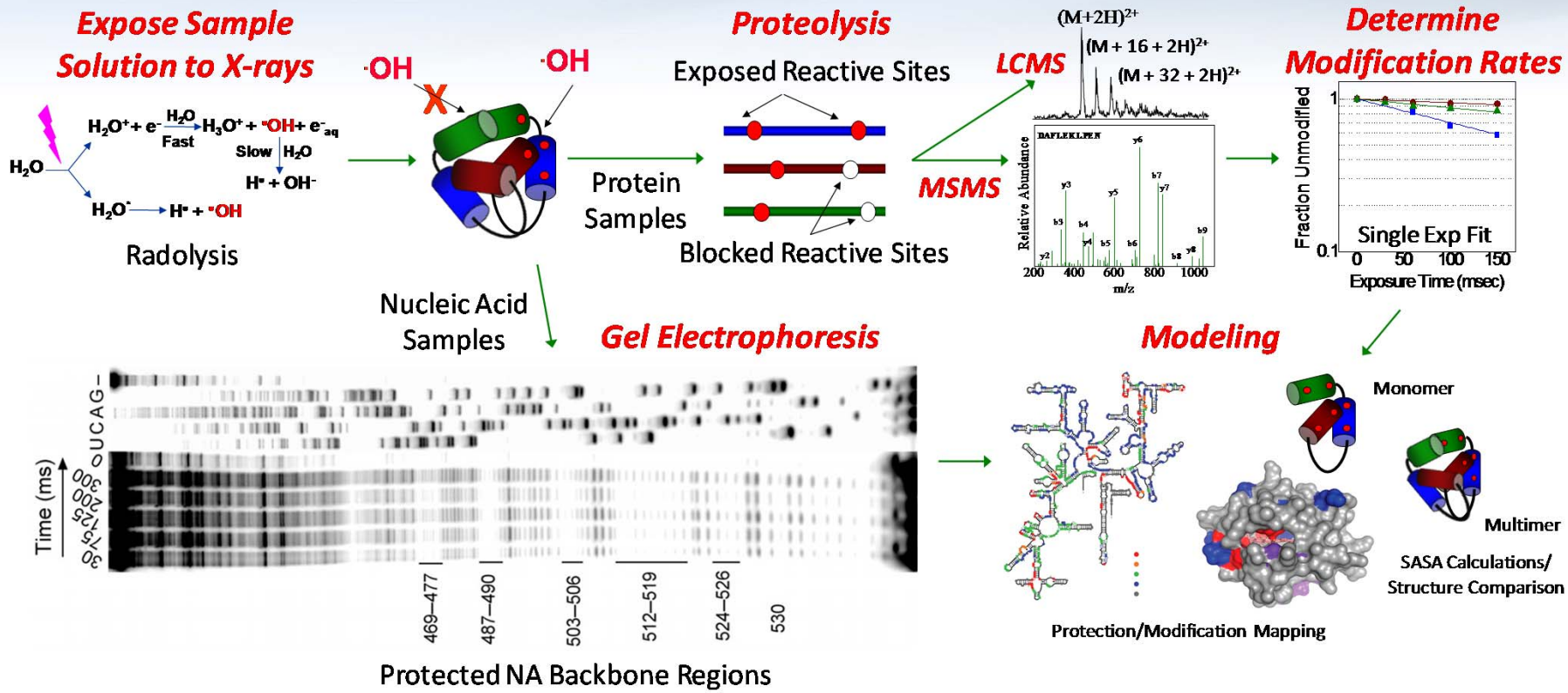

Solution-state probe of protein and nucleic acid structure and dynamics at amino-acid side-chain or single-nucleotide level resolution in near-physiological to in vivo conditions and on physiologically relevant timescales

Beamline at a glance

- Source: 3PW (3 mrad H, 0.33 mrad V)
- Optics: toroidal focusing mirror; Be window, diamond exit window
- Energy range: ~5-16 keV (broadband)
- Flux: ~10^{16} ph/s
- Power density delivered to sample at focus: >500 W/mm^2 (at 500mA ring current)

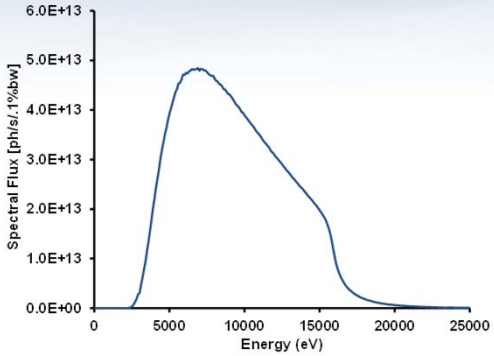

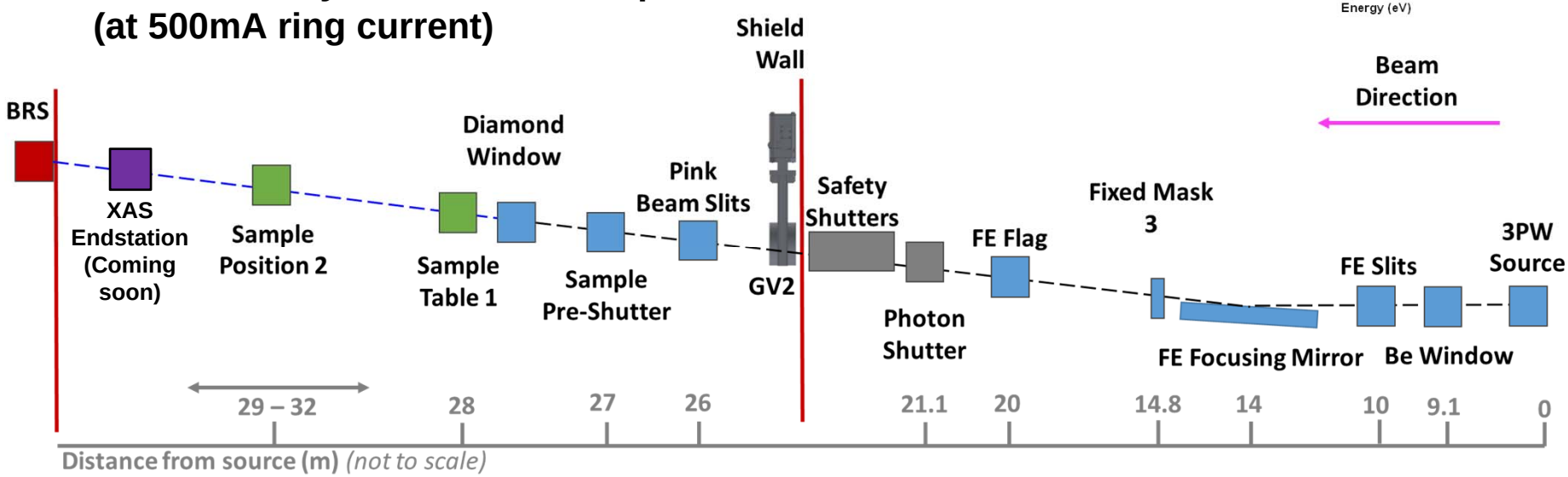

Scientific capabilities

- X-ray Footprinting
  - High-flux capillary flow
  - High throughput (-30C to RT)
  - *In vivo* (incubator, fraction collector)
  - Time-resolved (science commissioning)
- Sample preparation area
- BioXAS (coming soon)

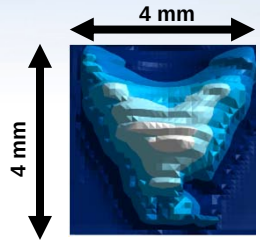

Unfocused Beam
~2.5 x 2.5 mm FWHM
(100m pinhole scan)

High-throughput Apparatus

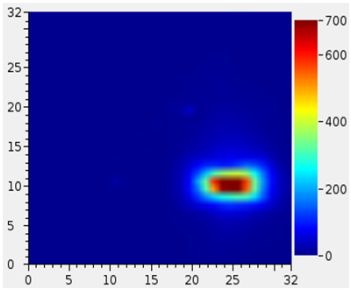

Measured Beam Focus
- 120 x 450 µm FWHM
- 220 W/mm^2 (at 250mA)

(diamond imaging detector)

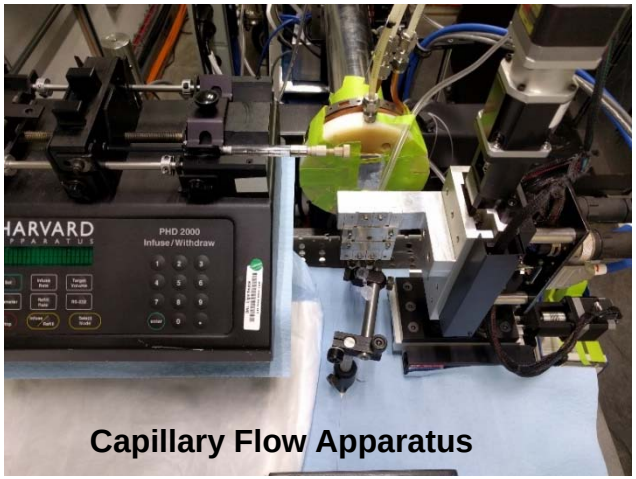

Capillary Flow Apparatus

In Vivo Setup (schematic)

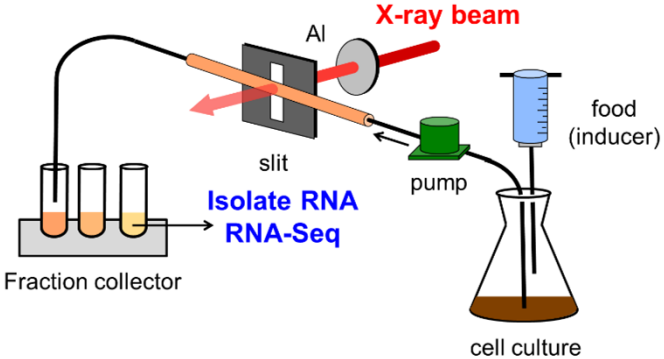

User stats

Fractional Beam Time Usage

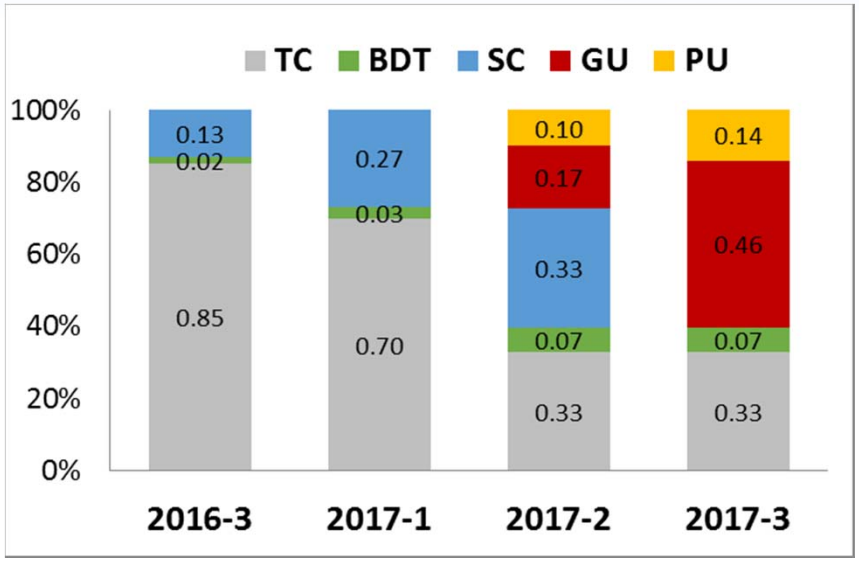

Proposals

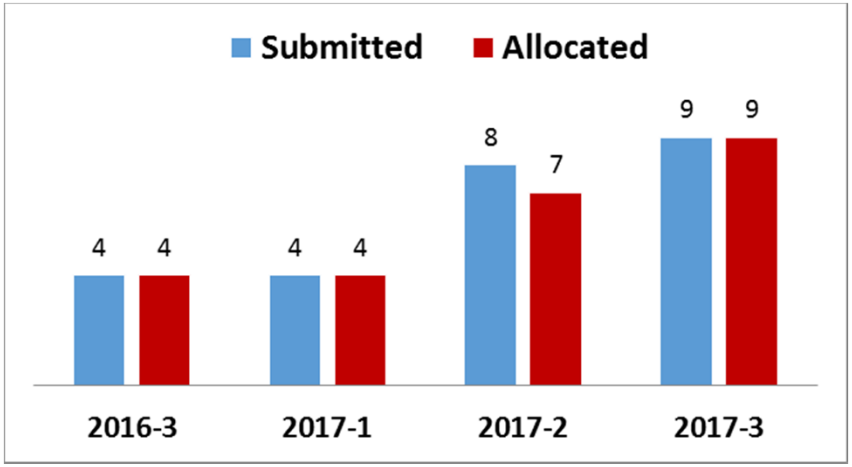

Notes:
1. Currently accepting rapid access proposals
2. Proprietary user in 2016-3
3. Constructing XAS endstation

Science highlight 1: Internal research

Case Western Reserve University/Stanford University (Lodowski/Kobilka Groups)

Program: G-protein Coupled Receptor Signaling

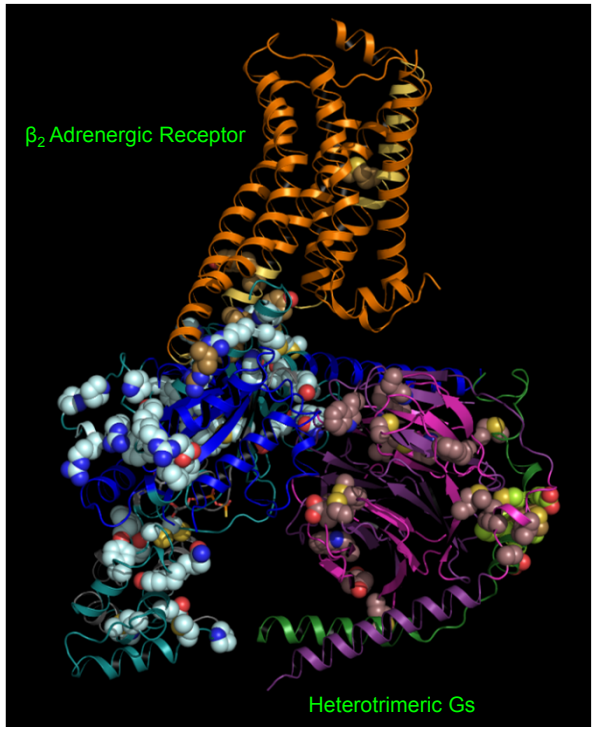

Hydroxyl radical modified residues are depicted as spheres. MS/XFP labeling covers the major sites of interaction between receptor and G protein

- **Understanding of dynamics/kinetics of association and dissociation of GPCRs with G proteins has lagged structural coverage significantly due to far fewer crystal structures of these complexes**
- **XFP experiments provide some of the first ms timescale kinetics of this association process**
- **Analysis is ongoing but points to sequential binding and multiple remodeling events at the site of the major contact between receptor and G protein**

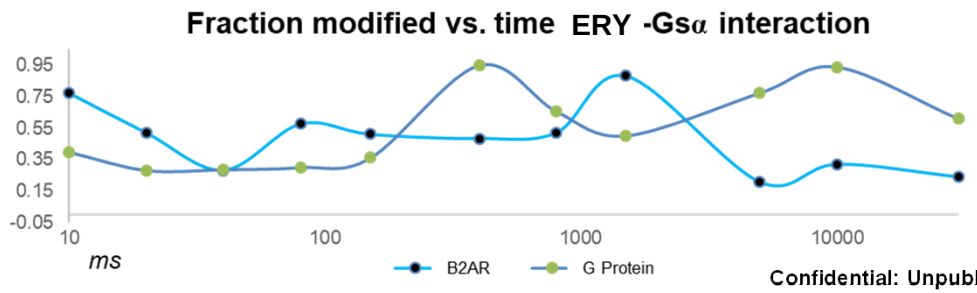

Confidential: Unpublished Results

Science highlight 2 : External group

University of Leeds (Stockley Group)

Program: Revealing The Dynamic Roles Of ssRNA Genomes During Viral Assembly And Infection

- **Initial experiment: high throughput x-ray footprinting – frozen state**
- **First x-ray footprinting of viral RNA in capsid**
- **Successfully mapped contacts between packaging signals in RNA and capsid protein**
- ***Expanding program***
  - **Additional targets (BSL2)**
  - **Time-resolved studies of viral assembly**

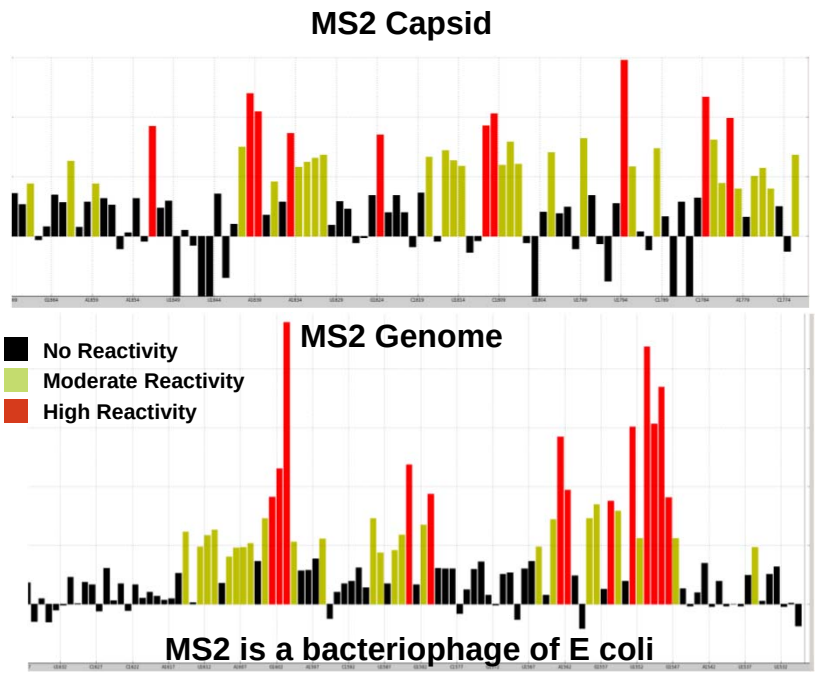

Confidential: Unpublished Results

Future plans

- User Program:
  - Ramp up GU program
  - Join BAG system for integrated biophysics
- Technical:
  - Commission time-resolved system (long term development, SC now - expected GU 2019)
  - Upgrade high-throughput system to 96-well format (expected commissioning 2018-1)
  - Construct and commission XAS endstation (expected first users: 2018-2)

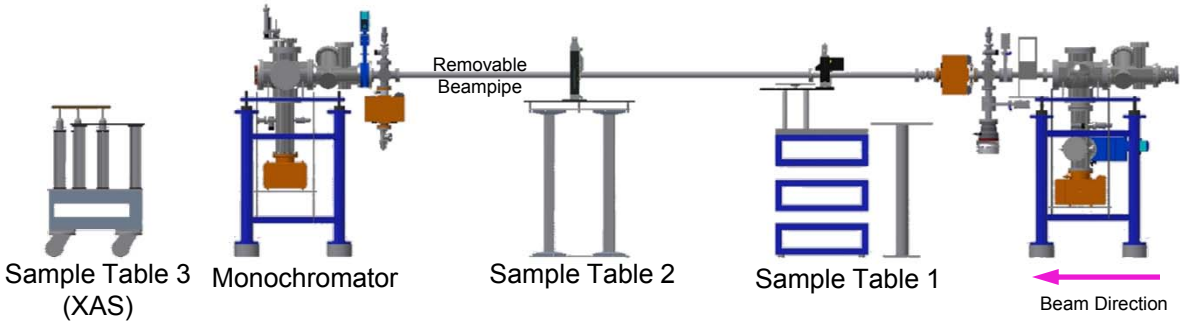

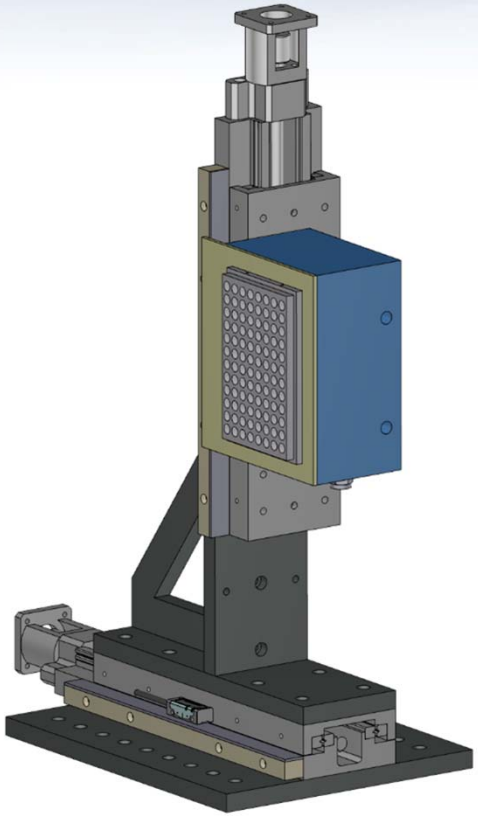

XFP is open for business!

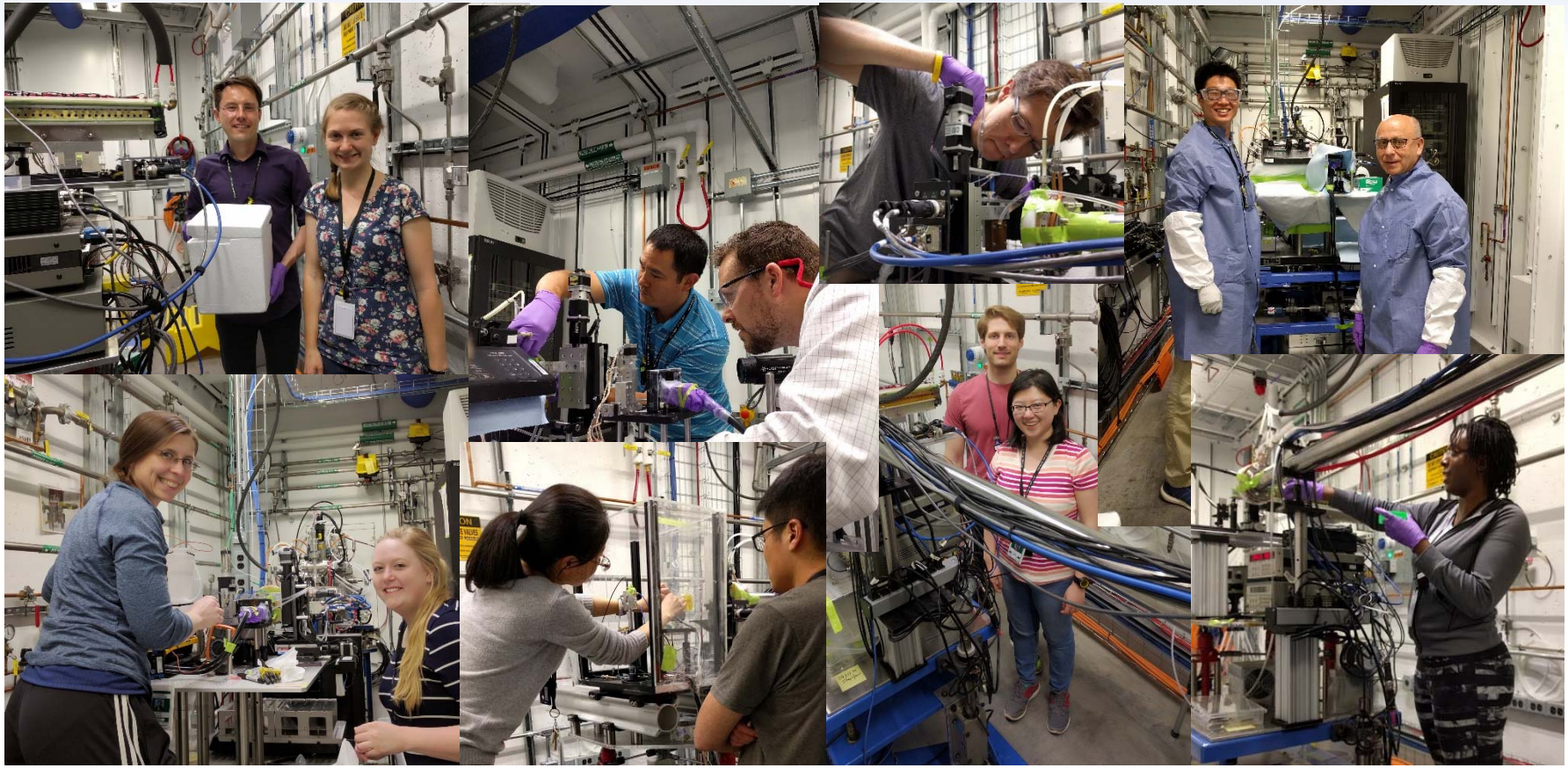
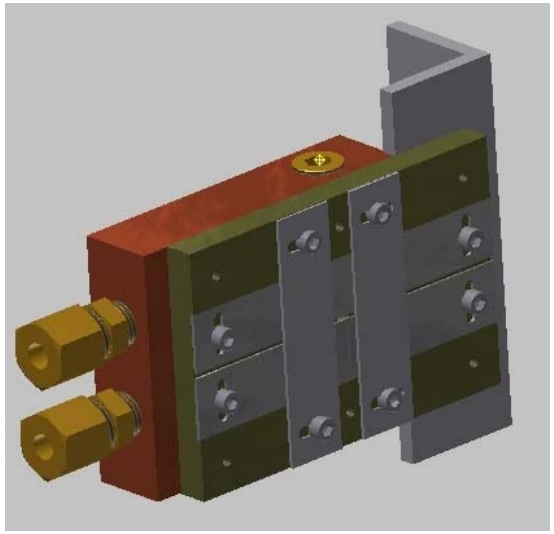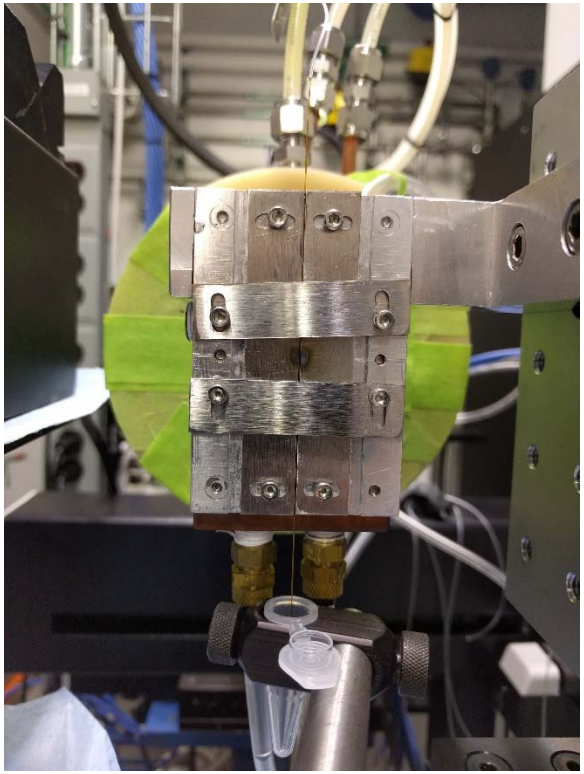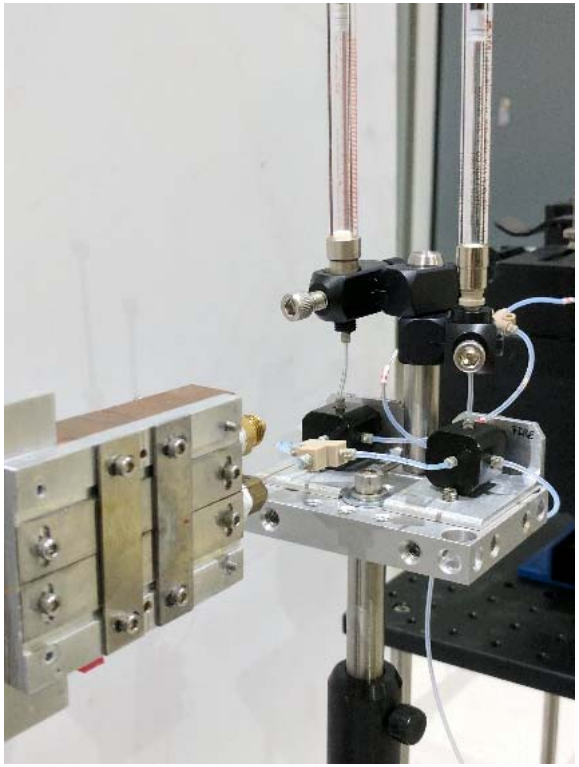
Appendix: Capillary flow cell close up and time-resolved apparatus