NSLS II 18-ID IRR Front End Phase 2 Equipment Protection System Documents List
G. Ganetis 10/10/2017

Beam Line __18-ID FIX-Front End –Phase 2_____

The following list represents the documents that summarize the review for the Front End Equipment Protection System Phase 2:

Document Description	**Documents Files**		**Comments**
Front End and SR Logic Diagram (Water & Vacuum interlocks)	LT-EL-BL-EI-EPS-0101-90_REV-B.pdf		Overall basic logic diagram for Storage ring and front end water flow and vacuum EPS interlocks.
Insertion Devices Front End Logic Diagram	LT-EL-BL-EI-EPS-0101-91_REV-D.pdf		Specific logic diagram for all ID Front Ends
Electrical Schematics Front End EPS Chassis –Cell 18 - - Rack Interconnection Wiring for 18-ID in cell 18 rack E4.	LT-EL-SR-EI-EPS-0118-90_REV-B.pdf - - LT-EL-SR-PS-RAK-1185-91_REV-E.pdf		ID Front End EPS connects to same cell – 18-ID goes to Cell 18 EPS Chassis
18-ID Front End EPS test report for Phase 2 front end. 18-ID Front End EPS test report for Phase 1 front end.	cell 18 test report phaseII 9_26_2017.pdf 18-ID Front End EPS Phase 1 Test Report 8_28_2017 .pd		This report covers only Phase 2 front end. This includes ID Photon Shutter, GV2, Beamline Vacuum Interlocks This report covers only Phase 1 front end. This includes ID Bending Magnet Shutter, GV1, ID open gap, and Front End water interlocks.
Design Description for Storage Ring and Front Ends EPS	PS-C-ASD-SPC-EPS-001.pdf		This document gives an overview of the many interlock functions that the EPS preforms. (A copy is available upon request)
18-ID EPS Front End Program Stored (PLC located in Cell 18 EPS chassis)	LT-EL-SR-EI-EPS-0118-70_REV-D.pdf		Drawing represents the storing of the PLC program in the Electrical Design room.

EPS LOGIC TEST REPORT PHASE 1

Cell under test: 18 ID

STEP	CHECK
1. With the help of a laptop computer, go to the Main CSS page and go to the SR EPS \SR ID FE tab. It will show the front end components including the ID GAP and the BEAM DUMP signals on the last two columns on the right. On the EPS's HMI screen look on the Insertion device other signals.	☑

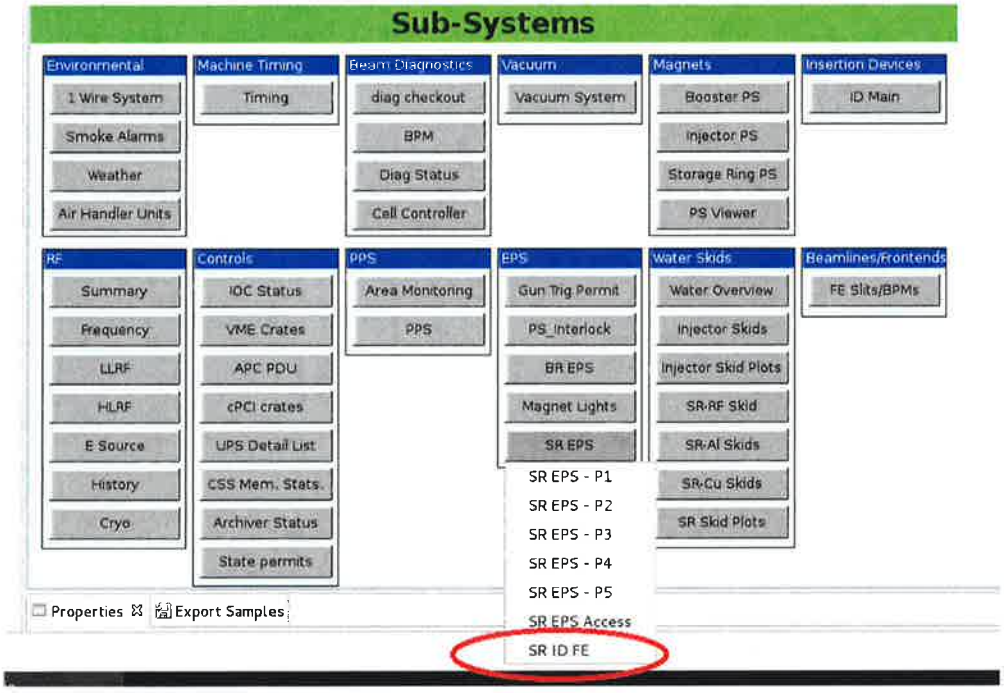

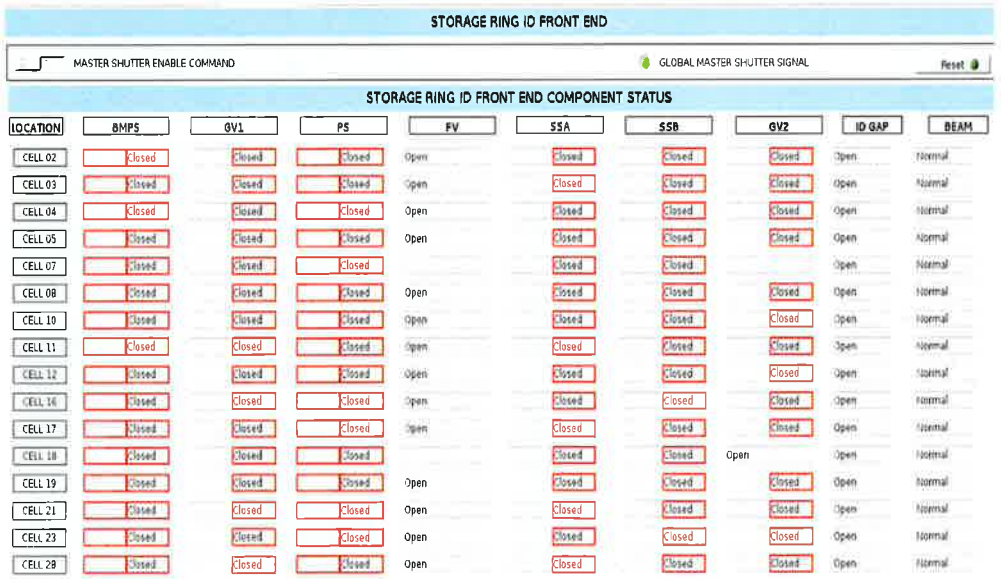

LOCATION	BMPS	GV1	PS	FV	SSA	SSB	GV2	ID GAP	BEAM
CELL 02	Closed	Closed	Closed	Open	Closed	Closed	Closed	Open	Normal
CELL 03	Closed	Closed	Closed	Open	Closed	Closed	Closed	Open	Normal
CELL 04	Closed	Closed	Closed	Open	Closed	Closed	Closed	Open	Normal
CELL 05	Closed	Closed	Closed	Open	Closed	Closed	Closed	Open	Normal
CELL 07	Closed	Closed	Closed		Closed	Closed		Open	Normal
CELL 08	Closed	Closed	Closed	Open	Closed	Closed	Closed	Open	Normal
CELL 10	Closed	Closed	Closed	Open	Closed	Closed	Closed	Open	Normal
CELL 11	Closed	Closed	Closed	Open	Closed	Closed	Closed	Open	Normal
CELL 12	Closed	Closed	Closed	Open	Closed	Closed	Closed	Open	Normal
CELL 16	Closed	Closed	Closed	Open	Closed	Closed	Closed	Open	Normal
CELL 17	Closed	Closed	Closed	Open	Closed	Closed	Closed	Open	Normal
CELL 18	Closed	Closed	Closed		Closed	Closed	Open	Open	Normal
CELL 19	Closed	Closed	Closed	Open	Closed	Closed	Closed	Open	Normal
CELL 21	Closed	Closed	Closed	Open	Closed	Closed	Closed	Open	Normal
CELL 23	Closed	Closed	Closed	Open	Closed	Closed	Closed	Open	Normal
CELL 28	Closed	Closed	Closed	Open	Closed	Closed	Closed	Open	Normal

2. Contact the control room to ask them operate the ID Gap while you are testing. Ask them to open the ID . This can be done also from the Insertion device CSS page.	☑
3. From the HMI screen close the BMPS, this should enable the GV1 to open or close. Leave the valve in open position.	☑
4. From the HMI screen open the BMPS. This condition will prevent the GV1 to close.	☑
5. Force a fault in the vacuum GV1 to force it to close while the BMPS is opened. This will dump the beam. Check this out come in the epics page as well as in the EPS chassis HMI screen.	☑
6. From the vacuum page in epics clear the fault and open the GV1, then in the SR ID FE page press the reset. It will restore the dump signal to its normal condition. Check this out come in the epics page as well as in the EPS chassis HMI screen.	☑
7. Close the BMPS, then close the GV1	☑
8. Manually open the BMPS. This will dump the beam. Check this out come in the epics page as well as in the EPS chassis HMI screen.	☑
9. Close the BMPS and then press the reset this will restore the dump signal to its normal condition.	☑
10. Ask the control room to close the ID GAP and check the DUMP signals in the HMI screen, both should go to Low. Also the epics page will show that the GAP is closed and the beam is dumped.	☑
11. Ask the control room to open the ID GAP and then press the reset. The DUMP signals should go back to HI after a reset signal, and the epics page should show ID GAP "Open" and BEAM "Normal"	☑
12. With the ID gap controls working, make sure to open and close the ID gap from the CSS page and verify the correct readings on the EPS HMI (MAIN/INSERTION DEVICE/OTHER SIGNALS) as well as in the epics interface. Controls available. Y/N Y Date: 08-28-2017	☑
13. GV1 enable signal to the vacuum PLC	☑
14. Flow meters test: The flow meters highlighted in the following graph part of the CSS page were manually tested on their warning and trip levels.	☑

C18

Flow Meter Trip Signal | SR VA GV IL Signal | SR VA RTD1 IL Signal | SR VA RTD2 IL Signal (17BM) | VA Trip General Signal

Flow Meter Reset | VA Reset

CH	Site Wide Name	Location Number	Nominal Value (GPM)	Warning Level (GPM)	Alarm Level (GPM)
FM01	C18-ALR-DPS-5360	OC-D-1	0.67	0.50	0.40
FM02	C18-ALR-DPS-5361	OC-D-2	0.97	0.50	0.40
FM03	C18-DWAR-DPS-5369	OC-D-8	4.44	3.00	2.50
FM04	C18-DWAR-DPS-5368	OC-D-9	4.37	3.00	2.50
FM05	C18-ABR-DPS-5262	OC-C-3	2.29	1.00	0.75
FM06	C18-ABR-DPS-5363	OC-C-4	1.83	1.00	0.75
FM07	C18-HFER-DPS-5366	OC-C-5	6.26	4.00	3.00
FM08	C18-LFER-DPS-5367	OC-C-6	1.22	1.20	0.90
FM09	C17-LFER-DPS-5269	OC-D-3	1.64	1.00	0.50
FM10	C19-NYXS-DPS-5926	OC-C-1	0.58	0.48	0.39
FM11	C19-NYXS-DPS-5937	OC-C-2	0.54	0.48	0.39

PHASE 1 REQUIREMENT

The Front end components required to be functioning and logically interacting during Phase 1 are the following:

- Insertion device
- Bending Magnet Photon Shutter
- Vacuum Gate Valve 1
- Water interlocks

The rest of the front end components are added during Phase 2.

Tested by: Andres Castiblanco Date: 08-28-2017

Signature: [illegible]

EPS LOGIC TEST REPORT PHASE 2

Cell under test: 18 ID

STEP	CHECK
1. With the help of a laptop computer, go to the Main CSS page and go to the SR EPS \SR ID FE tab. It will show the front end components including the ID GAP and the BEAM DUMP signals on the last two columns on the right. On the EPS's HMI screen look on the Insertion device other signals.	☑

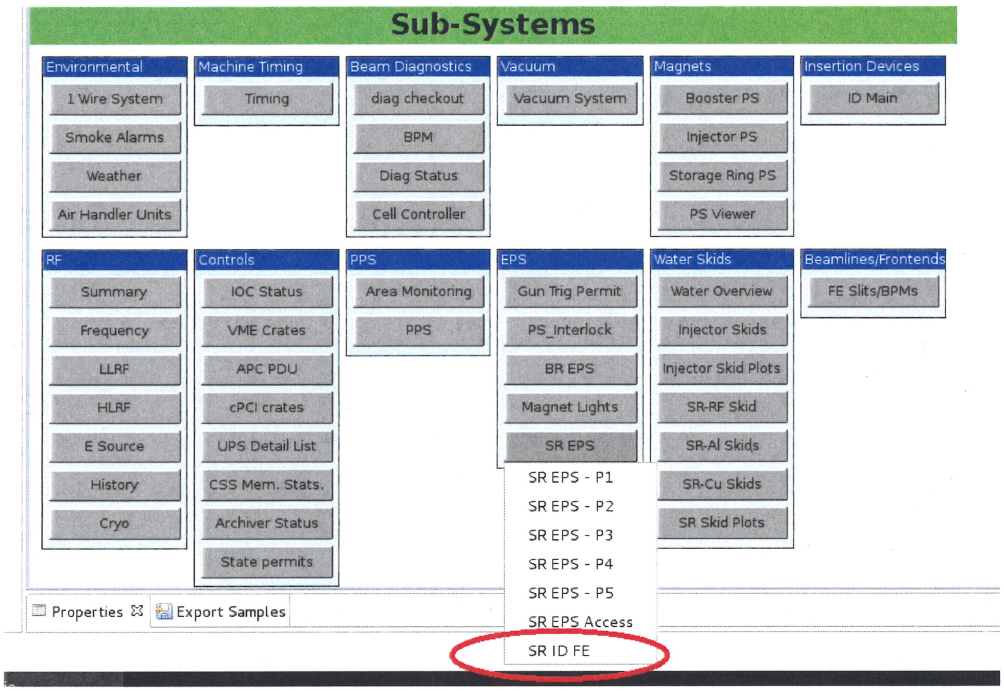

STORAGE RING ID FRONT END COMPONENT STATUS

LOCATION	BMPS	GV1	PS	FV	SSA	SSB	GV2	ID GAP	BEAM
CELL 02	Open	Open	Closed	Open	Closed	Closed	Open	Closed	Normal
CELL 03	Open	Open	Open	Open	Open	Open	Open	Closed	Normal
CELL 04	Open	Open	Closed	Open	Closed	Closed	Open	Closed	Normal
CELL 05	Open	Open	Closed	Open	Closed	Closed	Open	Closed	Normal
CELL 07	Closed	Open	Closed		Closed	Closed		Open	Normal
CELL 08	Open	Open	Closed	Open	Closed	Closed	Open	Closed	Normal
CELL 10	Open	Open	Closed	Open	Closed	Closed	Open	Closed	Normal
CELL 11	Open	Open	Open	Open	Open	Open	Open	Closed	Normal
CELL 12	Open	Open	Open	Open	Open	Open	Open	Closed	Normal
CELL 16	Open	Open	Closed	Open	Closed	Closed	Open	Closed	Normal
CELL 17	Open	Open	Open	Open	Open	Open	Open	Closed	Normal
CELL 18	Open	Open	Closed	Open	Closed	Closed	Open	Closed	Dumped
CELL 19	Open	Open	Closed	Open	Closed	Closed	Closed	Closed	Normal
CELL 21	Open	Open	Closed	Open	Closed	Closed	Open	Closed	Normal
CELL 23	Open	Open	Closed	Open	Closed	Closed	Open	Closed	Normal
CELL 28	Open	Open	Closed	Open	Closed	Closed	Open	Closed	Normal

2. Component switch and Logic verification: ☑

Component	OPEN POSITION		CLOSE POSITION	
	EPS system	CSS page	EPS system	CSS page
BMPS	✓	✓	✓	✓
GV1	✓	✓	✓	✓
PS	✓	✓	✓	✓
FV	✓	✓	✓	✓
SSA	✓	✓	✓	✓
SSB	✓	✓	✓	✓
GV2	✓	✓	✓	✓
GV3	NA	NA	NA	NA
GV4	NA	NA	NA	NA

- Note: NA stands for "Not Available"

3. GV1 enable signal to the vacuum PLC ☑

4. GV2 enable signal to the vacuum PLC ☑

5. GV2 bypass for PPS test ☑

6. Cell controller signals: ☑

COMPONENT	LEMO IN	CHECK
ID GAP	1	✓
BMPS	2	✓
PS	3	✓
ID BEAM DUMP 1	5	✓
ID BEAM DUMP 2	6	✓
BM BEAM DUMP 1	7	NA
BM BEAM DUMP 2	8	NA
PLC HB	9	✓

7. BMPS HMI Control ☑

PHASE 2 REQUIREMENT

The Front end components required to be functioning and logically interacting during Phase 2 are the following:

- Insertion device
- Bending Magnet Photon Shutter

- Vacuum Gate Valve 1
- Water interlocks
- Photon Shutter
- Vacuum Fast Valve
- Safety shutter A
- Safety shutter B
- Vacuum Gate Valve 2

From the components listed above, the insertion device, BMPS, GV1 and water interlocks were tested on Phase 1, the rest of the front end components were added during Phase 2.

Tested by: Andres Castiblanco Date: 9-26-2017

Signature: _____

REV	DESCRIPTION	DATE	BY	CHECKED	APP
A	INITIAL RELEASE	9/09/2014	SEJ	JM	AC
B	REVISED PER ECN LT-ECN-015-1338	10/7/2015	SEJ	JM	AC

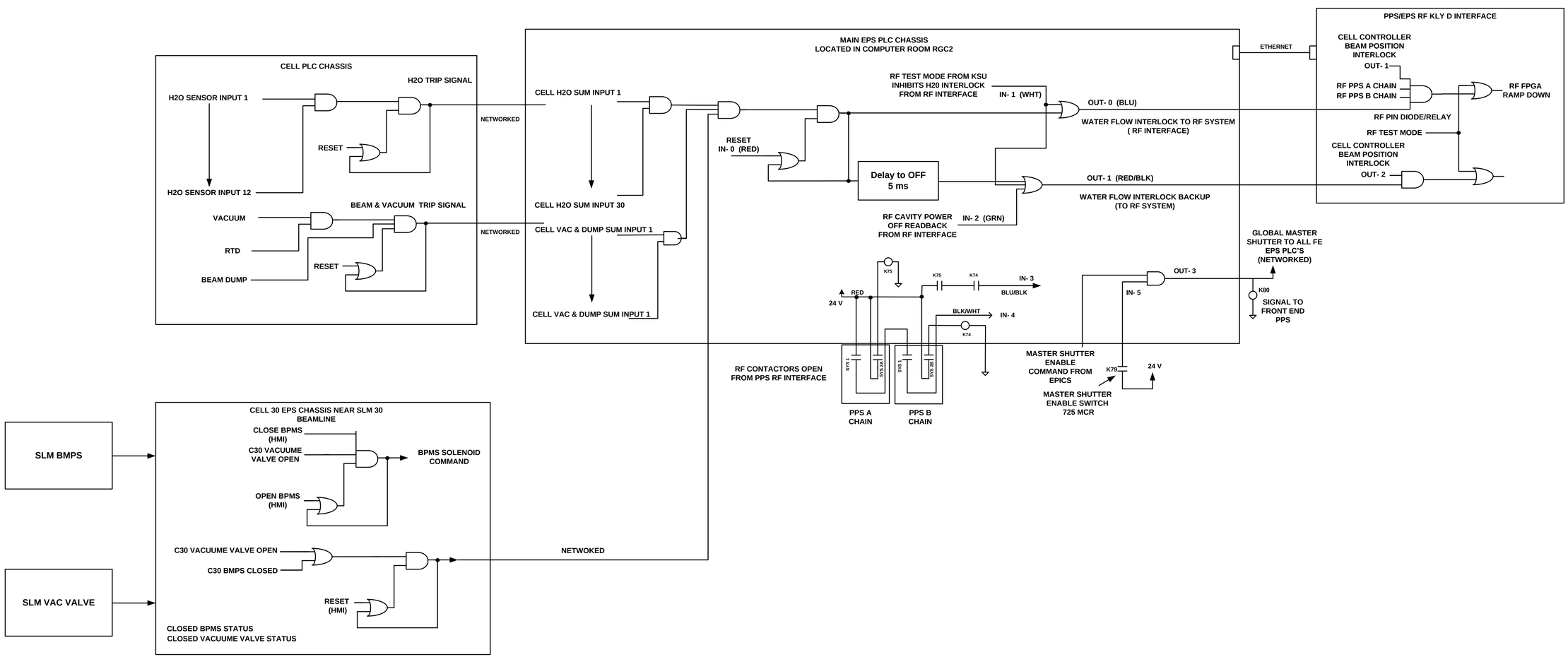

JOB NUMBER	USED ON DWG. NO.

BROOKHAVEN NATIONAL LABORATORY

BROOKHAVEN NATIONAL LABORATORY
BROOKHAVEN SCIENCE ASSOCIATES
UPTON, NEW YORK 11973
Exploring Life's Mysteries, Protecting its Future

NSLS II NATIONAL SYNCHROTRON LIGHT SOURCE II

UNLESS OTHERWISE SPECIFIED
INTEGER TOLERANCES ± .06
DECIMAL TOLERANCES
.X ± .030
.XX ± .015
.XXX ± .010
ANGULAR TOLERANCE ± 0.5°
UNSPECIFIED RADII .02 MAX
125 FINISH — BREAK SHARP CORNERS AND EDGES MAX .03 MIN .005

UNLESS OTHERWISE SPECIFIED
DIMENSIONS ARE IN INCHES
DIMENSIONS IN [*.**] ARE
MILLIMETERS EQUIV. FOR REF. ONLY

INTERPRET DRAWING AS PER
ANSI Y14.5 OR Y32.2

ESH&Q RISK LEVEL A-2

OUTSTANDING ECN'S

		DATE
DRWN BY	S. JARZABKOWSKI	9/09/2014
CHK BY	J. MALLEY	9/09/2014
ENG APP	A. CASTIBLANCO	9/09/2014
SUPV APP	G. GANETIS	9/10/2014
QA APP	E. CHESWICK	9/09/2014
ESH APP	B. LEE	9/09/2014

LOGIC DIAGRAM, FRONT END EPS INTERLOCK

DRAWING DIRECTORY	DRAWING NUMBER	REV
LT-EL-BL-EI	LT-EL-BL-EI-EPS-0101-90	B

COMPUTER REPRODUCIBLE | SCALE: N/A | SHEET 1 OF 2

LT-EL-BL-EI-EPS-0101-90

REV	DESCRIPTION	DATE	BY	CHECKED	APP
B	SEE SHEET 1	10/07/2015	SEJ	JM	AC

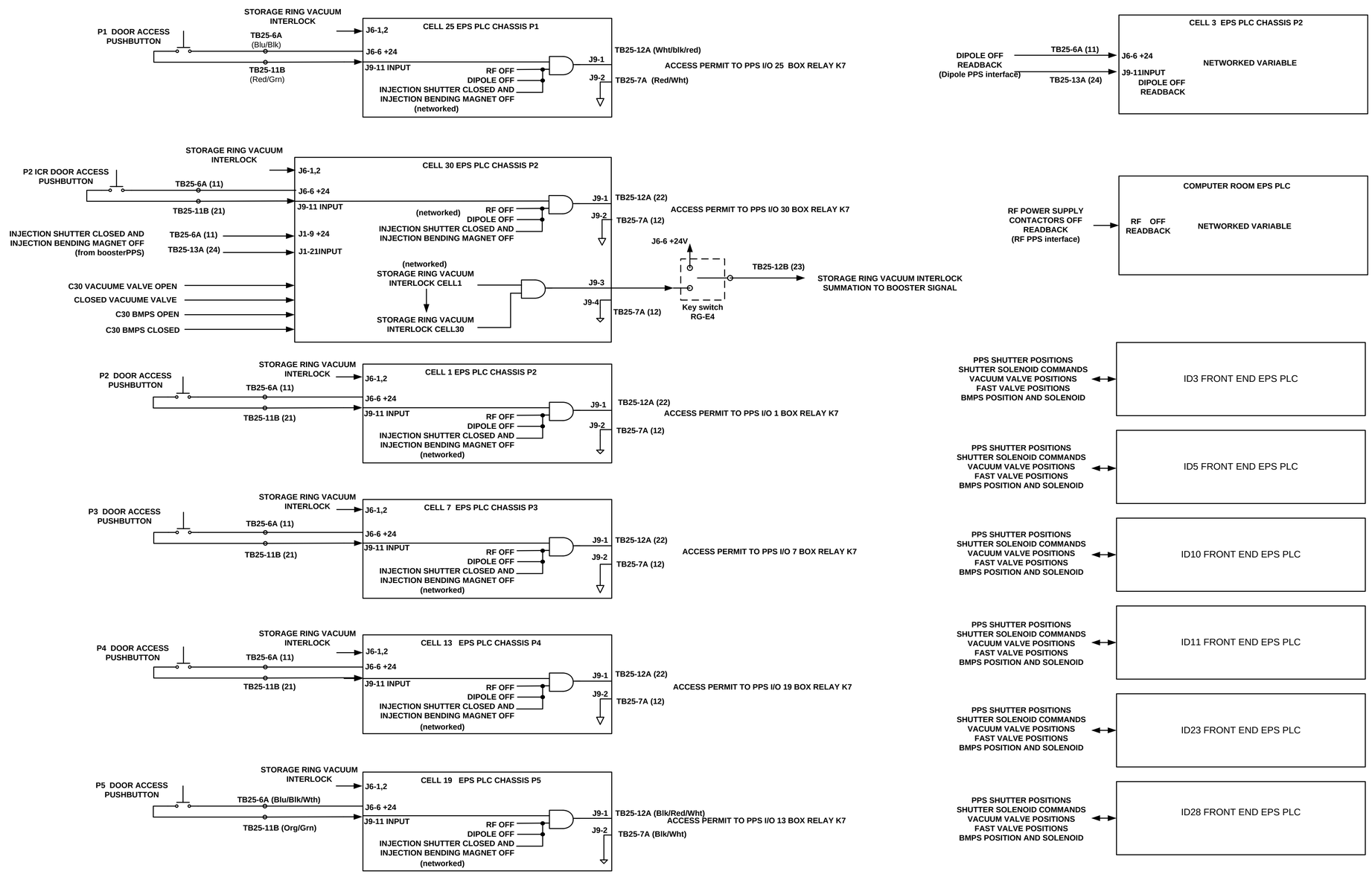

LT-EL-BL-EI-EPS-0101-90

LT-EL-BL-EI (DRAWING DIRECTORY)	LT-EL-BL-EI-EPS-0101-90 (DRAWING NUMBER)	B (REV)
COMPUTER REPRODUCIBLE	SCALE: N/A	SHEET 2 OF 2

REV	DESCRIPTION	DATE	BY	CHECKED	APP
A	INITIAL RELEASE	9/09/2014	SEJ	JM	AC
B	REVISED PER ECN 015-1026	11/5/2014	SEJ	JM	AC
C	REVISED PER ECN 015-1121	1-12-15	CG	JM	AC
D	REVISED PER ECN LT-ECN-015-1334	10/7/2015	SEJ	JM	AC

FE EPS LOGIC

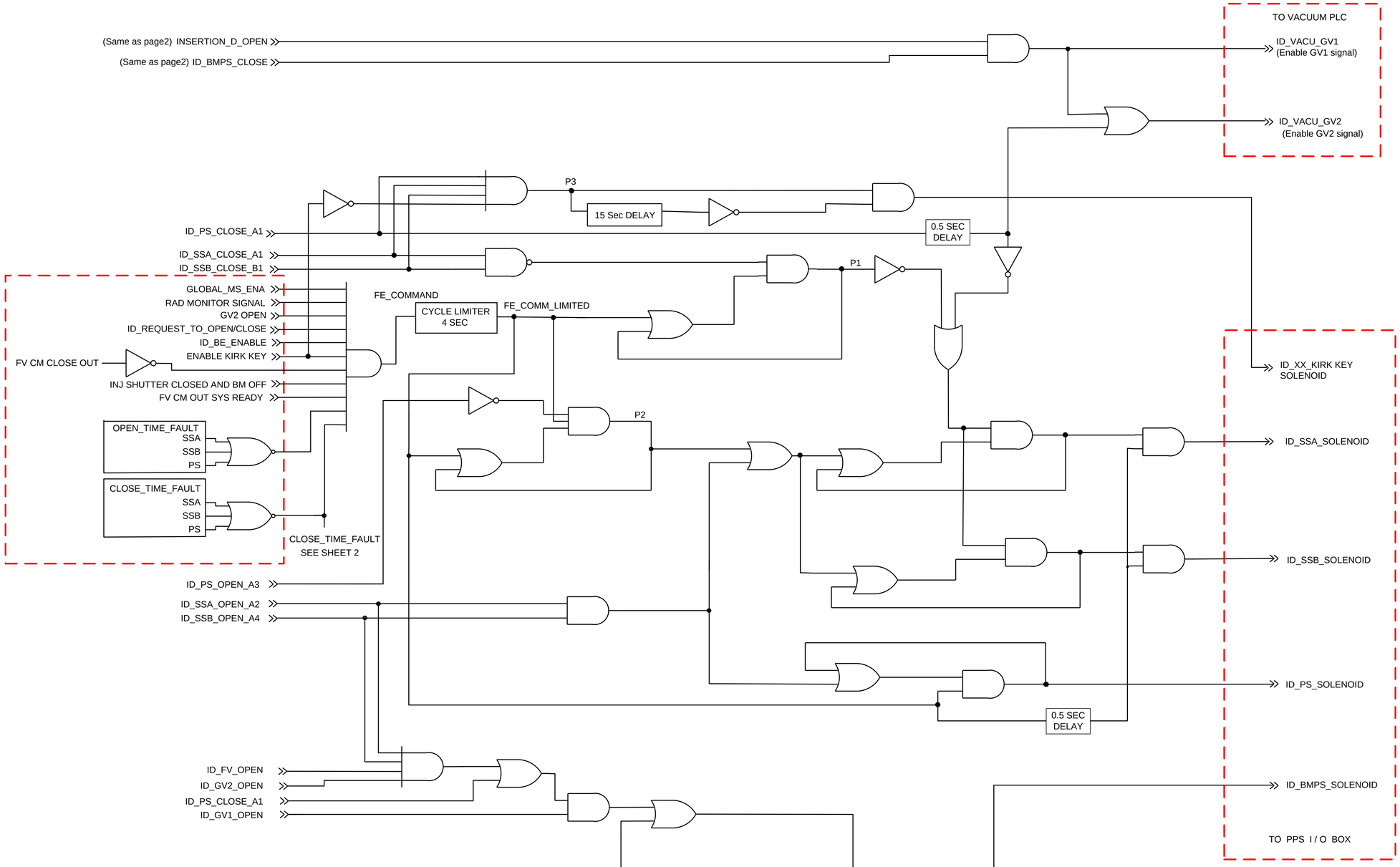

BROOKHAVEN NATIONAL LABORATORY

BROOKHAVEN NATIONAL LABORATORY
BROOKHAVEN SCIENCE ASSOCIATES
UPTON, NEW YORK 11973
Exploring Life's Mysteries, Protecting its Future

NSLS II NATIONAL SYNCHROTRON LIGHT SOURCE II

UNLESS OTHERWISE SPECIFIED
INTEGER TOLERANCES ± .06
DECIMAL TOLERANCES
.X ± .030
.XX ± .015
.XXX ± .010
ANGULAR TOLERANCE ± 0.5°
UNSPECIFIED RADII .02 MAX
125 BREAK SHARP CORNERS AND EDGES
FINISH MAX .03 MIN .005

UNLESS OTHERWISE SPECIFIED DIMENSIONS ARE IN INCHES DIMENSIONS IN [*.**] ARE MILLIMETERS EQUIV. FOR REF. ONLY

INTERPRET DRAWING AS PER ANSI Y14.5 OR Y32.2

ESH&Q RISK LEVEL A-2

		DATE	OUTSTANDING ECN'S
DRWN BY	S. JARZABKOWSKI	9/09/2014	
CHK BY	J. MALLEY	9/09/2014	
ENG APP	A. CASTIBLANCO	9/09/2014	
SUPV APP	G. GANETIS	9/10/2014	
QA APP	E. CHESWICK	9/09/2014	
ESH APP	B. LEE	9/09/2014	

JOB NUMBER | USED ON DWG. NO.

LOGIC DIAGRAM, FRONT END EPS

LT-EL-BL-EI — DRAWING DIRECTORY

LT-EL-BL-EI-EPS-0101-91 — DRAWING NUMBER

D — REV

COMPUTER REPRODUCIBLE | SCALE: N/A | SHEET 1 OF 2

LT-EL-BL-EI-EPS-0101-91

REV	DESCRIPTION	DATE	BY	CHECKED	APP
	SEE SHEET 1				

FE EPS LOGIC

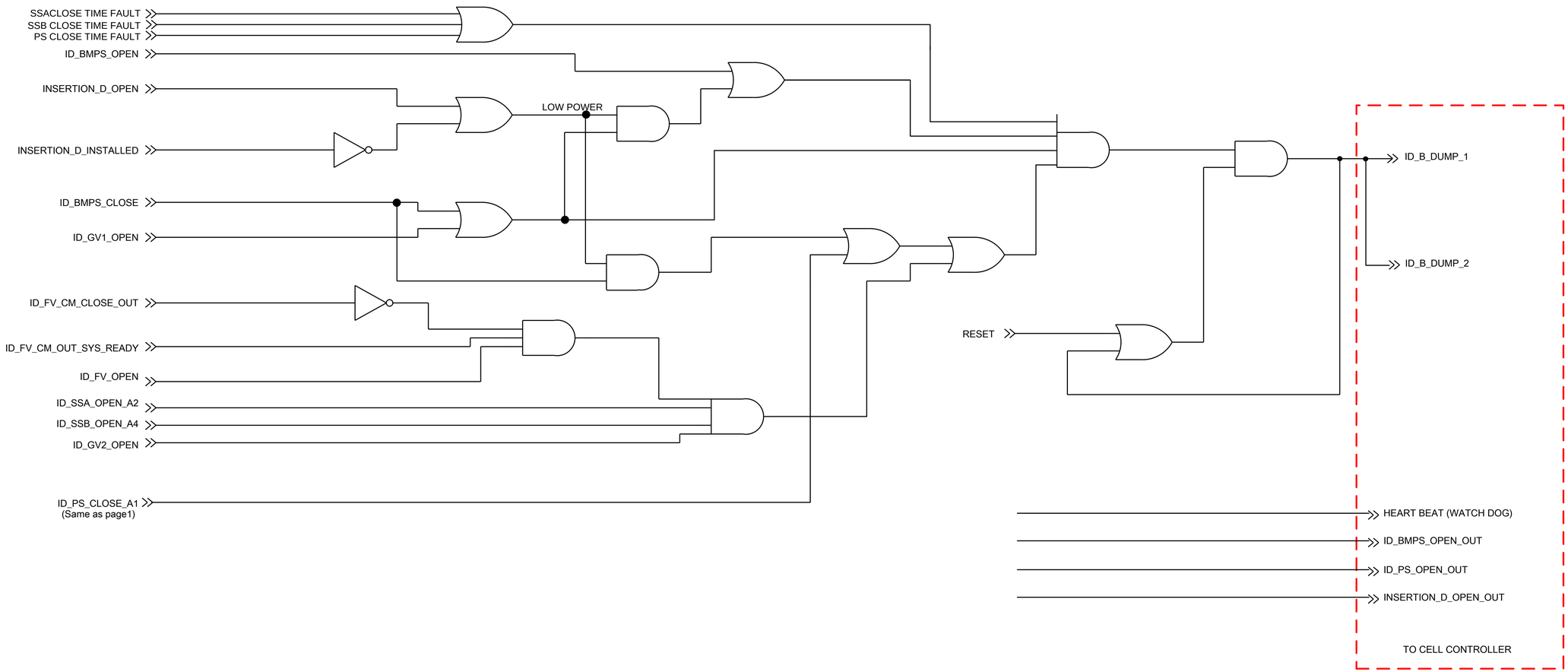

LT-EL-BL-EI-EPS-0101-91

LT-EL-BL-EI (DRAWING DIRECTORY)	LT-EL-BL-EI-EPS-0101-91 (DRAWING NUMBER)	D (REV)
COMPUTER REPRODUCIBLE	SCALE: N/A	SHEET 2 OF 2

FIRMWARE/SOFTWARE/PROGRAMMING LOGIC

DESCRIPTION:

EPS Front End PLC program that monitors and controls the front end components within the Cell and its data transfer with the EPS Controller located in the 740 building computer room.

PROGRAM	**RSLogix 5000**	
VERSION	**20.1**	
DEVICE	**Compact Logix Controller L32E**	
OPERATING SYSTEM	**Windows**	
PROGRAMMING METHOD	**Ladder Logic**	
FILE	**EPS_BOX_cell18_V25_FM_URV.ACD**	

REV	DESCRIPTION	BY	DATE	CHK	APP
A	INITIAL RELEASE	AC	04/01/14	MP	AC
B	REVISED PER ECN 016-1524	AC	06/20/16	MP	AC
C	REVISED PER ECN 017-1657	AC	11/04/16	MP	AC
D	REVISED PER ECN 017-1855	AC	10/04/17	MP	AC

LT-EL-SR-EI-EPS-0118-70

BROOKHAVEN NATIONAL LABORATORY

BROOKHAVEN NATIONAL LABORATORY
BROOKHAVEN SCIENCE ASSOCIATES
UPTON, NEW YORK 11973
Exploring Life's Mysteries, Protecting its Future

NSLS II NATIONAL SYNCHROTRON LIGHT SOURCE II

UNLESS OTHERWISE SPECIFIED
INTEGER TOLERANCES ± .06
DECIMAL TOLERANCES
.X ± .030
.XX ± .015
.XXX ± .010
ANGULAR TOLERANCE ± 0.5°
UNSPECIFIED RADII .02 MAX
125 FINISH — BREAK SHARP CORNERS AND EDGES
MAX .03 MIN .005

UNLESS OTHERWISE SPECIFIED DIMENSIONS ARE IN INCHES DIMENSIONS IN [*.**] ARE MILLIMETERS EQUIV. FOR REF. ONLY

ESH&Q RISK LEVEL A-2

INTERPRET DRAWING AS PER ANSI Y14.5 OR Y32.2

OUTSTANDING ECN'S

		DATE
DRWN BY	A. Castiblanco	04/01/14
CHK BY	M. Pfeffer	04/01/14
ENG APP	A. Castiblanco	04/01/14
SUPV APP	G. Ganetis	04/01/14
QA APP	E.CHESWICK	04/10/14
ESH APP	B.LEE	04/11/14

PROGRAMMABLE LOGIC
NSLS-II- STORAGE RING EPS
CHASSIS LOGIC CELL 18

LT-EL-SR-EI (DRAWING DIRECTORY) | LT-EL-SR-EI-EPS-0118-70 (DRAWING NUMBER) | D (REV)

COMPUTER REPRODUCIBLE | SCALE: N/A | SHEET 1 OF 1

JOB NUMBER | USED ON DWG. NO.

REV.	ZONE	DESCRIPTION	BY	DATE	CKR.	APP.
A		INITIAL RELEASE	SEJ	10/27/2015	JM	AC
B		REVISED PER ECN LT-ECN-016-1515	SEJ	6/10/2016	JM	AC

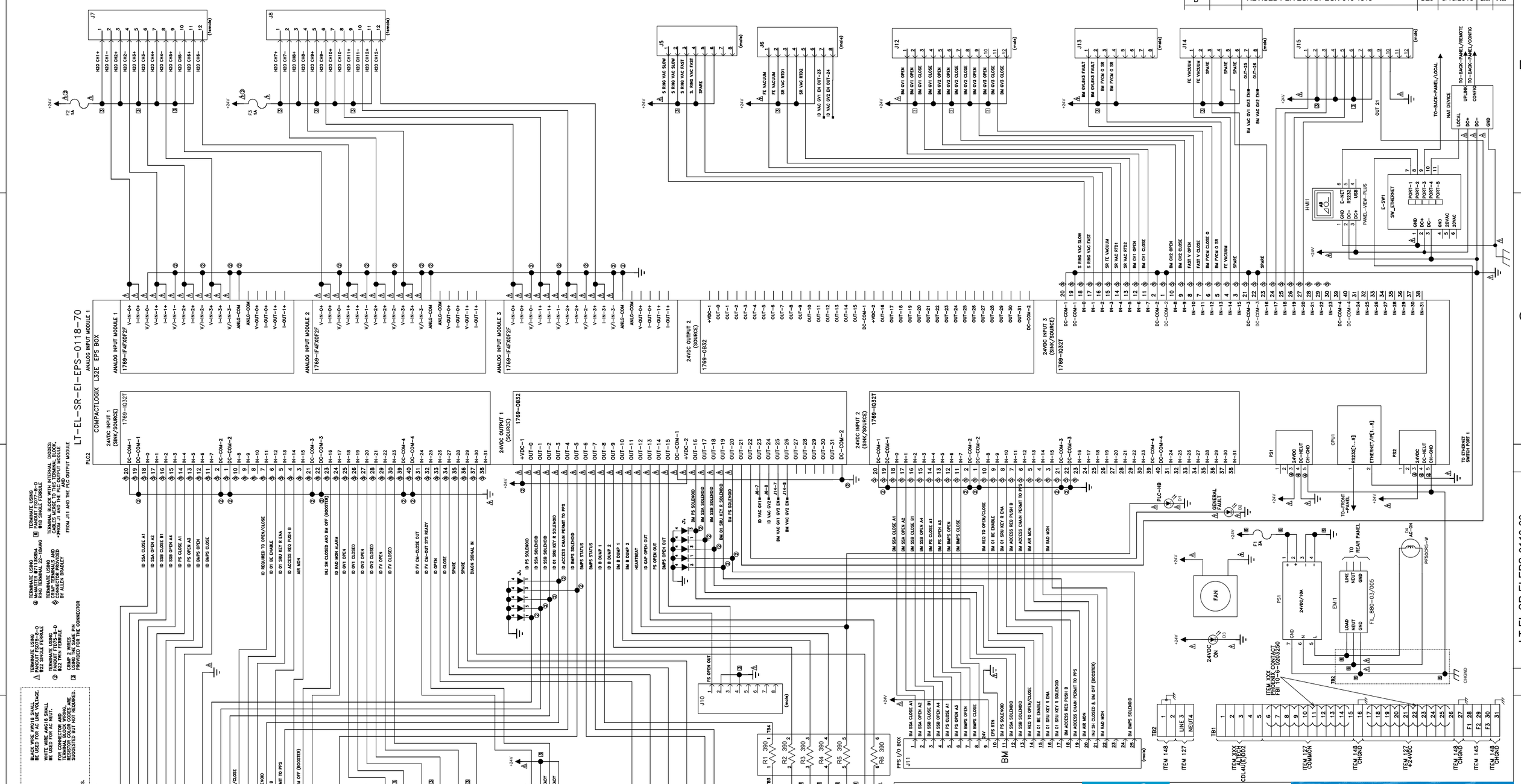

NOTES: UNLESS OTHERWISE SPECIFIED
1. ALL RESISTOR VALUES ARE IN OHMS, 1%, 100PPM.
2. ALL CAPACITOR VALUES ARE IN MICROFARADS, 50V.
3 ALL INDUCTOR VALUES ARE IN MICROHENRIES.

UNLESS OTHERWISE SPECIFIED
ALL DIMENSIONS ARE IN INCHES
DIMENSIONS IN BRACKETS [X.XX] (WHERE PRESENT) ARE MILLIMETERS AND ARE FOR REFERENCE ONLY
INTERPRET DRAWING AS PER ANSI Y14.5-1994 OR Y32.2-1975

DIMENSIONAL TOLERANCES	ANGULAR TOLERANCE
X. ± 0.060	± 0.5°
.X ± 0.030	FINISH
.XX ± 0.015	125
.XXX ± 0.005	

BREAK EDGES & SHARP CORNERS 0.005 MIN. TO 0.030 MAX

THIRD ANGLE PROJECTION | SCALE N/A

NEXT ASSY:
PROJECT

BROOKHAVEN NATIONAL LABORATORY
BROOKHAVEN NATIONAL LABORATORY
BROOKHAVEN SCIENCE ASSOCIATES
UPTON, N.Y. 11973
Exploring Life's Mysteries, Protecting its Future

NSLS II NATIONAL SYNCHROTRON LIGHT SOURCE II

DRAWN BY	S. JARZABKOWSKI	10/27/2015
CHECKED BY	J. MALLEY	10/28/2015
VACUUM APPROVAL	NA	
ENGINEER APPROVAL	A. CASTIBLANCO	10/27/2015
SUPERVISOR APPROVAL	G. GANETIS	10/30/2015
ES&H APPROVAL	R. LEE	10/28/2015
QA APPROVAL	E. CHESWICK	10/28/2015

WIRING DIAGRAM
STORAGE RING EPS CHASSIS, CELL 18

SHEET SIZE: D | DRAWING/PART NUMBER: LT-EL-SR-EI-EPS-0118-90 | REVISION: B

WBS# 1.03.06.02

ESH&Q RISK LEVEL A-2

SHEET 1 OF 1

REV	DESCRIPTION	DATE	BY	CHECKED	APP
A	INITIAL RELEASE	2/15/14	CG	JM	AC
B	REVISED PER ECN LT-ECN-016-1491 MOVED SHEET 1 TO SHEET 2 AND ADDED NEW SHEET 1	10/14/2015	SEJ	JM	AC
C	REVISED PER ECN LT-ECN-016-1516	6/09/2016	SEJ	JM	AC
D	REVISED PER ECN LT-ECN-017-1642	10/10/2016	SEJ	JM	AC
E	REVISED PER ECN LT-ECN-017-1853	9/21/2017	SEJ	JM	AC

INTERCONNECTION DIAGRAM RG-E4 / EPS CHASSIS
CELL 18 (18-ID / 17-BM)

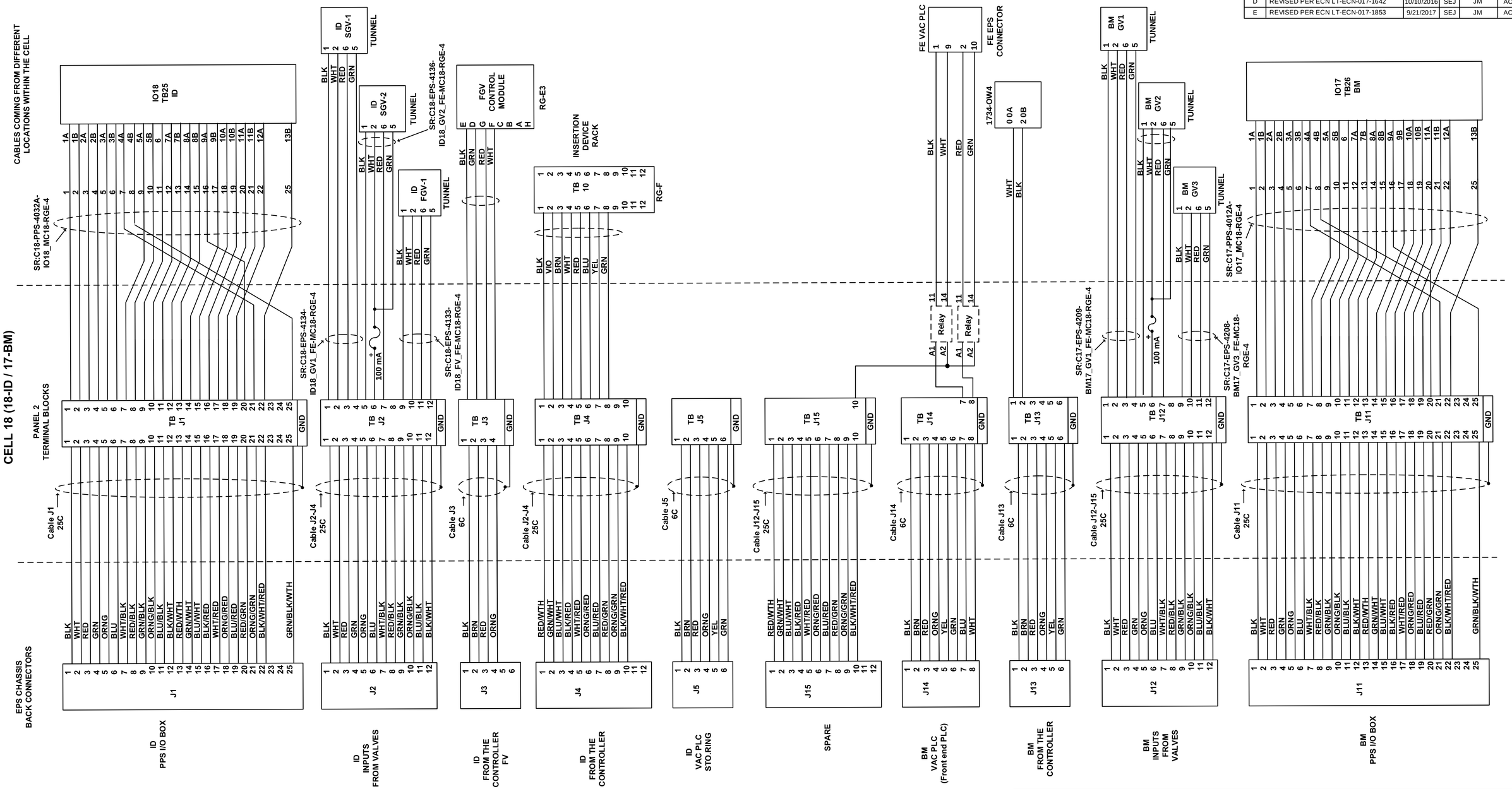

LT-EL-SR-PS-RAK-1185-91

BROOKHAVEN NATIONAL LABORATORY

BROOKHAVEN NATIONAL LABORATORY
BROOKHAVEN SCIENCE ASSOCIATES
UPTON, NEW YORK 11973
Exploring Life's Mysteries, Protecting its Future

NSLS II NATIONAL SYNCHROTRON LIGHT SOURCE II

UNLESS OTHERWISE SPECIFIED
INTEGER TOLERANCES ± .06
DECIMAL TOLERANCES
.X ± .030
.XX ± .015
.XXX ± .010
ANGULAR TOLERANCE ± 0.5°
UNSPECIFIED RADII .02 MAX
125 BREAK SHARP CORNERS AND EDGES
FINISH MAX .03 MIN .005

UNLESS OTHERWISE SPECIFIED DIMENSIONS ARE IN INCHES
DIMENSIONS IN [*.**] ARE MILLIMETERS EQUIV. FOR REF. ONLY
INTERPRET DRAWING AS PER ANSI Y14.5 OR Y32.2

ESH&Q RISK LEVEL A-2

		DATE	OUTSTANDING ECN'S
DRWN BY	C.GUARINO	2/15/14	
CHK BY	J.MALLEY	2/18/14	
ENG APP	A.CASTIBLANCO	2/18/14	
SUPV APP	G.GANETIS	2/21/14	
QA APP	E.CHESWICK	2/19/14	
ESH APP	R.LEE	2/20/14	

WIRING DIAGRAM
PENTANT 5 CELL 18
RACK GROUP E4 EPS CHASSIS

LT-EL-SR-PS (DRAWING DIRECTORY) | LT-EL-SR-PS-RAK-1185-91 (DRAWING NUMBER) | E (REV)

WBS # 1.3.6.2 | SCALE: N/A | SHEET 1 OF 2

JOB NUMBER | USED ON DWG. NO.

REV	DESCRIPTION	DATE	BY	CHECKED	APP
	SEE SHEET 1				

INTERCONNECTION DIAGRAM RG-E4 / EPS CHASSIS
CELL 18 (18-ID / 17-BM)

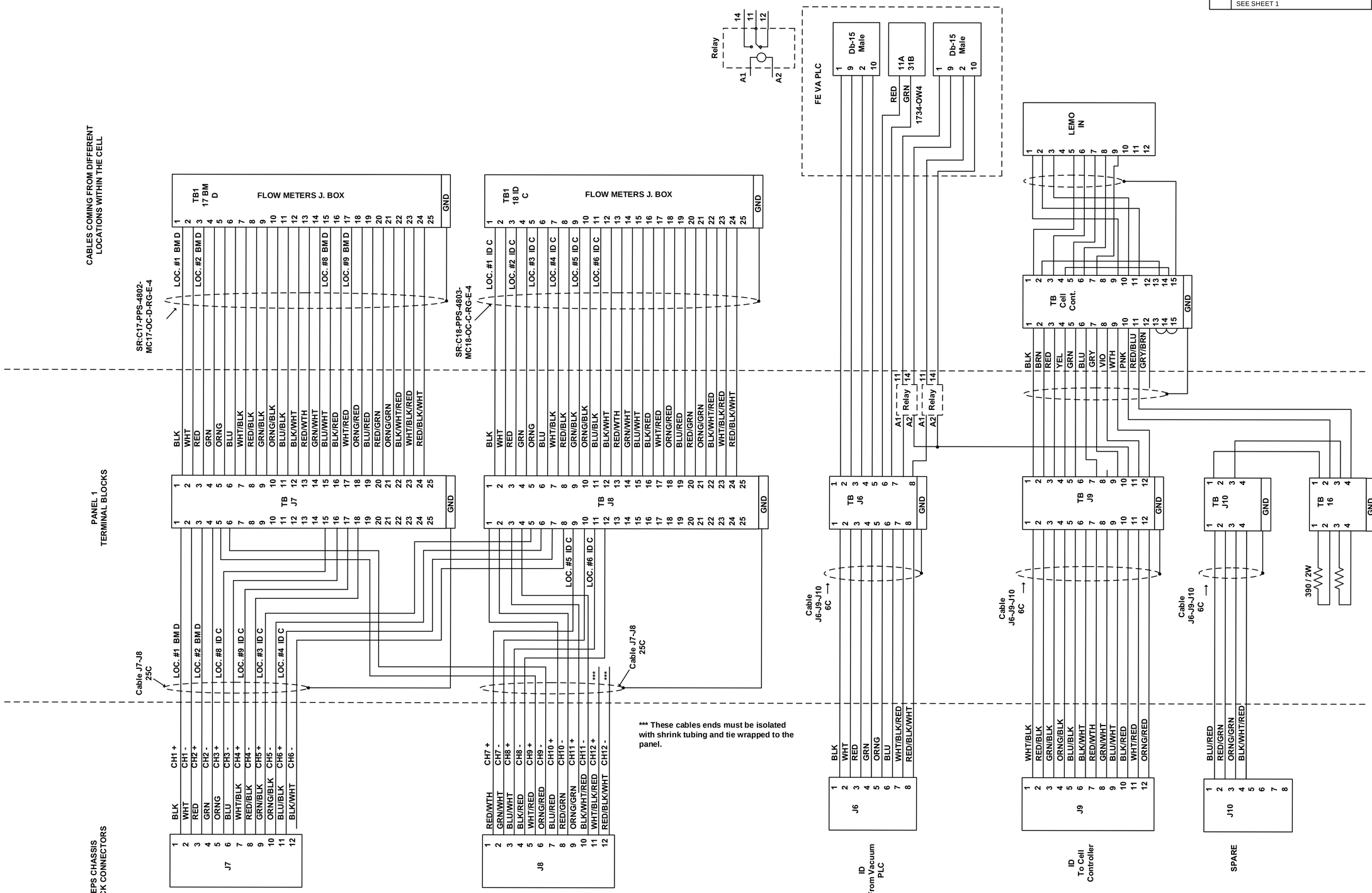

LT-EL-SR-PS DRAWING DIRECTORY	LT-EL-SR-PS-RAK-1185-91 DRAWING NUMBER	E REV
COMPUTER REPRODUCABLE	SCALE: N/A	SHEET 2 OF 2

LT-EL-SR-PS-RAK-1185-91