NSLS II 18-ID SIX Beam Line Personal Protection System Certification Validation Check List
G. Ganetis 10/9/17

Beam Line __18-ID_FIX_____

The following check list represents the documents and tasks that summarize the review the evaluator has done for a NSLS II Beam Line Personal Protection System:

Document or Task	**Documents Reviewed**	**Checked**	**Comments**
Beam Line Logic Diagram	LT-EL-BL-EI-PPS-1180-96_REV-A.pdf		
Front End Logic Diagram	LT-EL-BL-EI-PPS-0101-92_REV-G.pdf		
Beam Line Logic Diagram reviewed by PS Radiation Safety Committee (Sub Committee)	logic_4bm_7bm_18id_2017_final.pdf		
Electrical Schematics First Optical Enclosure Water Flow Trip Amplifiers Hutch B Front End –Network/ System Front End-SR 18 I/O Box	 LT-EL-BL-EI-PPS-1180-91_REV-A.pdf LT-EL-BL-EI-PPS-1180-92_REV-A.pdf LT-EL-BL-EI-PPS-1180-93_REV-A.pdf LT-EL-BL-EI-PPS-0101-90 _REV-B.pdf LT-EL-BL-EI-PPS-0101-91_REV-B.pdf LT-EL-SR-EI-PPS-0218-90_REV-C.pdf		 - - - (A Chain) (B Chain) -
Certification Test Procedure with executed check lists. ID 18 PPS Rad Interlock Cert Check List	Beamline Radiological Interlock Test NSLSII-ESH-PRC-001.pdf 18ID initial PPS certification.pdf		Procedure Check List
Beam Line Tour & Secure Demonstration	Not Used for IRRs		
Mechanical Inspection reports for Beam line Hutch Doors	Door Switch Inspection Report 9_19_17.pdf		
Design Description for Beam Lines and Front End PPS	PS-C-XFD-SPC-PPS-001		(Copies available upon request)
Maintenance Procedures	PS-C-XFD-PRC-023		(Copies available upon request)
Network Isolation Test Procedure	PS-C-XFD-PRC-022		(Copies available upon request)

NSLS II 18-ID SIX Beam Line Personal Protection System Certification Validation Check List
G. Ganetis 10/9/17

PPS Equipment Layout Drawing	LT-EL-BL-EI-HCH-1180-REV-A.pdf		
ECNs required during Certification using Small Change Procedure	None		
Deviation Reports on Installed system	None		
Configuration Control 18-ID Chain A PPS Front End P5 Program Stored 18-ID Chain B PPS Front End P5 Program Stored 18-ID Chain A PPS Beamline Program Stored 18-ID Chain B PPS Beamline Program Stored	 LT-EL-BL-EI-PPS-0101-74_REV-E.pdf LT-EL-BL-EI-PPS-0101-84_REV-E.pdf LT-EL-BL-EI-PPS-1180-70_REV-A.pdf LT-EL-BL-EI-PPS-1180-71_REV-A.pdf		This section contains the new system storing the PLC program in the Electrical Design room

Evaluator _____ _____ Date _____
Print Name Signature

NSLS-II Beamline 18-ID Radiological Interlock Test Checklist

Test Reason: Initial Test	Test Result: ☑ Passed ☐ Failed
	Test Type: ☐ Pre-Certification ☑ Certification ☐ Partial
Test Date: 9/26/2017	Start Time: 9/25/17 Finish Time: 9/26/17
Tester 1: Thomas McDonald ; Brian Heneveld	Assistant 1: Accelerator Operations Staff
Tester 2: Robert Chmiel ; Gabrielle Stuve	Assistant 2:
Tester 1 Signature: Thomas J. McDonald	Tester 2 Signature: B Chmiel
*Reviewer 1:	Reviewer 1 Signature:
Reviewer 2:	Reviewer 2 Signature:
** Safety Signature 18-ID (Beamline HMI) A Chain: 08C0B39A B Chain: 659ØCB39	Previous 18-ID SS# Date: / / A Chain: B Chain:
** Safety Signature Pentant 5 Beamline (SR HMI) A Chain: B527 251C B Chain: ØD73 AAC1	Previous Pentant 5 SS# Date: / / A Chain: B Chain:

* A review by an Accelerator Safety Systems Engineer and a designated specialist (Reviewer 2) is only required upon a Test failure.
**If Current Safety Signature number (found in top left corner on HMI) is different from previous number, contact the Accelerator Safety Systems Cognizant Engineer.

PREPARATION:

I.	All hutch door switches have been evaluated by NSLS-II Engineering for proper positioning	✓
II.	Inform Control Room Lead Operator that testing will be done	✓
III.	Obtain Beamline enable and PPS reset keys from Control Room	✓
IV.	Verify that beamline vacuum and water interlocks are satisfied	✓
V.	Place muffler on beam imminent sounder	✓
VI.	Request Lead Operator enable Master Shutters	✓

A1 ***Verify System Lockouts***

Gun HVPS Enable Switch	✓
Linac modulator line cords (3) OR Booster Dipole F PS 480 V	✓
Booster RF HVPS 480 V OR Booster low level RF drive termination	✓
SR System C low level RF drive termination OR SR System C RF output connection to cavity	✓
SR System D low level RF drive termination OR SR System D RF output connection to cavity	✓

A2 ***Verify Search and Time Beam Imminent Alarm***

Verify that search path is free from obstacles and line of sight is clear in search mirrors in accordance with PS-C-XFD-PRC-010, *Beamline Enclosure Search and Secure and Breaking Security Procedure.* ✓

Repeat steps for each 18-ID hutch.	A	B
Close all doors except the main door	✓	✓
"Entry Permitted" sign is ON	✓	✓
Using the keypad, lock the closed doors	✓	✓
Press SB1	✓	✓
SB1 illuminates	✓	✓
Search sounder sounds	✓	✓
Search yellow beacon flashing	✓	✓
Press SB2	✓	✓
SB2 illuminates	✓	✓
Press SB3	✓	✓
SB3 illuminates	✓	✓
Exit hutch and close main door	✓	✓
Press SBE and ***begin timing***	✓	✓
Beam imminent alarm sounds for 30 seconds	✓	✓
After warning, (FOE, B) Interlocked A and B ON (**green**), HMI	✓	✓
"Interlocked" sign is ON	✓	✓
Maglock A and B ON (**green**) all doors, HMI	✓	✓
Press the SBE/Access Button	✓	✓
"Interlocked" sign is OFF, "Entry Permitted" sign is ON	✓	✓
FOE, B Interlocked A and B OFF, HMI	✓	✓
Maglock A OFF (may require opening Maglock on keypad)	✓	✓
Open door	✓	✓
Door opens, Maglock B OFF	✓	✓

A3 ***Out of Sequence Search in the FOE (A Hutch) and B Hutch***

Repeat steps for each 18-ID hutch.	A	B
Press SB2	✓	✓
SB2 does not illuminate	✓	✓
Press SB1	✓	✓

SB1 illuminates	✓	✓
Press SB3	✓	✓
SB3 does not illuminate	✓	✓
Close hutch door and press SBE	✓	✓
Hutch does NOT secure	✓	✓

A4 ***Search Timeout***

Repeat steps for each 18-ID hutch.	A	B
Press first search button and ***begin timing***	✓	✓
Complete search ***without pressing Final Search button***	✓	✓
Search sounders off in 2 minutes	✓	✓
Press Final Search button	✓	✓
Search does not complete	✓	✓

A5 ***Shutter Enable***

Place actuators on FOE door switches and attach Maglock devices.		✓
	Beamline Online A and B OFF	✓
Enable beamline with key and perform a reset	Beamline Online A and B ON (green)	✓
Search the FOE	FE Shutter Permits A and B ON ***after*** Beam Imminent Warning	✓
Open FE Shutters	FE Shutters A and B indicate open (green)	✓
	"Beam On" sign is ON	✓
Close FE Shutters	FE Shutters A and B indicate closed (red)	✓
	"Beam On" sign is OFF	✓

A6 ***Emergency Stops (ES) FOE (A Hutch)***

For each ES search FOE hutch.	ES1	ES2	ES3	ES4
Open FE Shutters from keypad	✓	✓	✓	✓
FE Shutters A and B open (green)	✓	✓	✓	✓
FOE Interlocked A and B ON (green)	✓	✓	✓	✓
FE Shutter Permits A and B ON (green)	✓	✓	✓	✓
FE Critical Device Permits A and B ON	✓	✓	✓	✓

Right Maglock A and B ON (**green**)	✓	✓	✓	✓
Left Maglock A and B ON (**green**)	✓	✓	✓	✓
Press ES	✓	✓	✓	✓
FE Shutters A and B closed (**red**)	✓	✓	✓	✓
FOE Interlocked A and B OFF	✓	✓	✓	✓
FE Shutter Permits A and B OFF	✓	✓	✓	✓
FE Critical Device Permits A and B OFF	✓	✓	✓	✓
Right Maglock A OFF	✓	✓	✓	✓
Left Maglock A OFF	✓	✓	✓	✓
Pull out ES	✓	✓	✓	✓
ES Sum Latch OFF	✓	✓	✓	✓
Reset fault	✓	✓	✓	✓
ES Sum Latch ON (**green**)	✓	✓	✓	✓

A7 ***Emergency Stops (ES) B Hutch***

For each ES search hutch.	**ES1**	**ES2**	**ES3**	**ES4**
Open FE Shutters and L1S1 Shutter from keypad	✓	✓	✓	✓
All Shutters A and B open (**green**)	✓	✓	✓	✓
B Interlocked A and B ON (**green**)	✓	✓	✓	✓
L1S1 Shutter Permit A and B ON (**green**)	✓	✓	✓	✓
FE Critical Device Permits A and B ON	✓	✓	✓	✓
Right Maglock A and B ON (**green**)	✓	✓	✓	✓
Left Maglock A and B ON (**green**)	✓	✓	✓	✓
Press ES	✓	✓	✓	✓
L1S1 Shutter A and B closed (**red**)	✓	✓	✓	✓
B Interlocked A and B OFF	✓	✓	✓	✓
L1S1 Shutter Permit A and B OFF	✓	✓	✓	✓
FE Critical Device Permits A and B OFF	✓	✓	✓	✓
Right Maglock A OFF	✓	✓	✓	✓
Left Maglock A OFF	✓	✓	✓	✓

Pull out ES	✓	✓	✓	✓
ES Sum Latch OFF	✓	✓	✓	✓
Reset fault	✓	✓	✓	✓
ES Sum Latch ON (green)	✓	✓	✓	✓

A8 ***B Hutch Labyrinth 1 Switches and Latches***

Place actuators on the labyrinth switches/latches and downstream left door switches and Maglock. ✓

Check the corresponding Permits for each switch tested (e.g., A Permit for switch A1).

	A	B	Latch
Search hutch	✓	✓	✓
Open FE Shutters and L1S1 Shutter from keypad	✓	✓	✓
All Shutters A and B open (green)	✓	✓	✓
B Interlocked A and B ON (green)	✓	✓	✓
L1S1 Shutter Permit A and B ON (green)	✓	✓	✓
Cable Lab 1 Switches/Latch A and B ON (green)	✓	✓	✓
FE Critical Device Permits A and B ON	✓	✓	✓
Remove one switch actuator	✓	✓	✓
L1S1 Shutter A and B closed (red)	✓	✓	✓
B Interlocked OFF	✓	✓	✓
L1S1 Shutter Permit OFF	✓	✓	✓
Cable Lab 1 Switch/Latch Permit OFF	✓	✓	✓
FE Critical Device Permits A and B OFF	✓	✓	✓
Replace switch actuator and reset fault	✓	✓	✓

Remove labyrinth actuators and close labyrinth door ✓

A9 ***B Hutch Labyrinth 2 Switches and Latches***

Place actuators on the labyrinth switches/latches and downstream left door switches and Maglock. ✓

Check the corresponding Permits for each switch tested (e.g., A Permit for switch A1).

	A	B	Latch
Search hutch	✓	✓	✓
Open FE Shutters and LIS1 Shutter from keypad	✓	✓	✓
All Shutters A and B open (green)	✓	✓	✓

B Interlocked A and B ON (**green**)	✓	✓	✓	
L1S1 Shutter Permit A and B ON (**green**)	✓	✓	✓	
Cable Lab 2 Switches/Latch A and B ON (**green**)	✓	✓	✓	
FE Critical Device Permits A and B ON	✓	✓	✓	
Remove one switch actuator	✓	✓	✓	
L1S1 Shutter A and B closed (**red**)	✓	✓	✓	
B Interlocked OFF	✓	✓	✓	
L1S1 Shutter Permit OFF	✓	✓	✓	
Cable Lab 2 Switch/Latch Permit OFF	✓	✓	✓	
FE Critical Device Permits A and B OFF	✓	✓	✓	
Replace switch actuator and reset fault	✓	✓	✓	
Remove labyrinth actuators and close labyrinth door				✓

A10 ***FOE Right Door Switches***

Place actuators on the door switches and Maglock. ✓

Check the corresponding Permits for each switch tested (e.g., A Permit for switch A1).

	A	**B**	**Reed**
Search hutch	✓	✓	✓
Open FE Shutters from keypad	✓	✓	✓
FE Shutters A and B open (**green**)	✓	✓	✓
FOE Interlocked A and B ON (**green**)	✓	✓	✓
FE Shutter Permits A and B ON (**green**)	✓	✓	✓
FOE Door Switch Sum A and B ON (**green**)	✓	✓	✓
FE Critical Device Permits A and B ON	✓	✓	✓
Remove one switch actuator	✓	✓	✓
FE Shutters A and B closed (**red**)	✓	✓	✓
FOE Interlocked OFF	✓	✓	✓
FE Shutter Permit OFF	✓	✓	✓
FOE Door Switch Sum OFF	✓	✓	✓
FE Critical Device Permits A and B OFF	✓	✓	✓

Replace switch actuator and reset fault ✓ ✓ ✓

Remove actuators and close door ✓

A11 ***FOE Left Door Switches***

Place actuators on the door switches and Maglock. ✓

Check the corresponding Permits for each switch tested (e.g., A Permit for switch A).

	A	B	Reed
Search hutch	✓	✓	✓
Open FE Shutters from keypad	✓	✓	✓
FE Shutters A and B open (**green**)	✓	✓	✓
FOE Interlocked A and B ON (**green**)	✓	✓	✓
FE Shutter Permits A and B ON (**green**)	✓	✓	✓
FOE Door Switch Sum A and B ON (**green**)	✓	✓	✓
FE Critical Device Permits A and B ON	✓	✓	✓
Remove one switch actuator	✓	✓	✓
FE Shutters A and B closed (**red**)	✓	✓	✓
FOE Interlocked OFF	✓	✓	✓
FE Shutter Permit OFF	✓	✓	✓
FOE Door Switch Sum OFF	✓	✓	✓
FE Critical Device Permits A and B OFF	✓	✓	✓
Replace switch actuator and reset fault	✓	✓	✓

Remove actuators and close door ✓

A12 ***B Hutch Right Door Switches***

Place actuators on the door switches and Maglock. ✓

Check the corresponding Permits for each switch tested (e.g., A Permit for switch A).

	A	B	Reed
Search hutch	✓	✓	✓
Open FE Shutters and L1S1 Shutter from keypad	✓	✓	✓
All Shutters A and B open (**green**)	✓	✓	✓
B Interlocked A and B ON (**green**)	✓	✓	✓

L1S1 Shutter Permit A and B ON (**green**)	✓	✓	✓
B Door Switch Sum A and B ON (**green**)	✓	✓	✓
FE Critical Device Permits A and B ON	✓	✓	✓
Remove one switch actuator	✓	✓	✓
L1S1 Shutter A and B closed (**red**)	✓	✓	✓
B Interlocked OFF	✓	✓	✓
L1S1 Shutter Permit OFF	✓	✓	✓
B Door Switch Sum OFF	✓	✓	✓
FE Critical Device Permits A and B OFF	✓	✓	✓
Replace switch actuator and reset fault	✓	✓	✓
Remove actuators and close door			✓

A13 ***B Hutch Left Door Switches***

Place actuators on the door switches and Maglock. ✓

Check the corresponding Permits for each switch tested (e.g., A Permit for switch A).

	A	B	Reed
Search hutch	✓	✓	✓
Open FE Shutters and L1S1 Shutter from keypad	✓	✓	✓
All Shutters A and B open (**green**)	✓	✓	✓
B Interlocked A and B ON (**green**)	✓	✓	✓
L1S1 Shutter Permit A and B ON (**green**)	✓	✓	✓
B Door Switch Sum A and B ON (**green**)	✓	✓	✓
FE Critical Device Permits A and B ON	✓	✓	✓
Remove one switch actuator	✓	✓	✓
L1S1 Shutter A and B closed (**red**)	✓	✓	✓
B Interlocked OFF	✓	✓	✓
L1S1 Shutter Permit OFF	✓	✓	✓
B Door Switch Sum OFF	✓	✓	✓
FE Critical Device Permits A and B OFF	✓	✓	✓
Replace switch actuator and reset fault	✓	✓	✓
Remove actuators and close door			✓

A14 ***Magnetic Lock Test (FOE)***

Connect the FOE test box to the PPS cabinet. Use the box to turn ON the Maglocks (set switches to "Normal"). ✓

Repeat steps for each door: Right (R) and Left (L)

	R	L
Search hutch	✓	✓
FOE Interlocked A and B ON (**green**)	✓	✓
FE Shutter Permits A and B ON (**green**)	✓	✓
Door Maglock A and B ON (**green**)	✓	✓
Open FE Shutters	✓	✓
FE Shutters open (**green**)	✓	✓
Using FOE test box, turn OFF Maglock	✓	✓
Door Maglock A OFF	✓	✓
FE Shutters closed (**red**)	✓	✓
FOE Interlocked A OFF	✓	✓
FE Shutter Permit A OFF	✓	✓
Turn On Maglock and reset fault	✓	✓
Search hutch	✓	✓
Using FE Shutter test fixture, Open FE Shutters	✓	✓
FE Crtical Device Permits A and B ON	✓	✓
Using FOE test box, turn OFF Maglock	✓	✓
Within 3 seconds:		
FE Critical Device Permit A chain OFF	✓	✓
Close FE Shutters and reset fault	✓	✓

Disconnect FOE test box ✓

A15 ***Magnetic Lock Test (B Hutch)***

Connect the FOE test box to the PPS cabinet. Use the box to turn ON the Maglocks (set switches to "Normal"). ✓

Repeat steps for each door: Right (R) and Left (L)

	R	L
Search hutch	✓	✓

B Interlocked A and B ON (**green**)	✓	✓	
L1S1 Shutter Permit A and B ON (**green**)	✓	✓	
Door Maglock A and B ON (**green**)	✓	✓	
Open FE Shutters and L1S1 Shutter	✓	✓	
All Shutters open (**green**)	✓	✓	
Using FOE test box, turn OFF Maglock	✓	✓	
Door Maglock A OFF	✓	✓	
L1S1 Shutter closed (**red**)	✓	✓	
B Interlocked A OFF	✓	✓	
L1S1 Shutter Permit A OFF	✓	✓	
Turn On Maglock and reset fault	✓	✓	
Search hutch	✓	✓	
Using FE Shutter test fixture, Open FE Shutters and L1S1 Shutter	✓	✓	
FE Critical Device Permits A and B ON	✓	✓	
Using FOE test box, turn OFF Maglock	✓	✓	
Within 3 seconds:			
FE Critical Device Permit A chain OFF	✓	✓	
Close FE Shutters and reset fault	✓	✓	
Disconnect FOE test box			✓

A16 ***Water Interlock***

Record the pretest water flows for the 2 PPS meters in GPM.

Meter Reading	Meter Reading	Current STA A	Current STA B
A1= 1.6	B1= 1.6	A STA1= 1.6	B STA1= 1.6

The current programmed trip settings for the amplifiers are in column 1. The STA readouts for each tested A and B chain STAs will be recorded in columns 3 and 4. These recordings should be within 15% of the programmed trip point (column 2).

Trip Points	Trip Points (- 15 %)	Recorded A Trip	Recorded B Trip
PPS 1: 1.3 GPM	1.1 GPM	A STA1= 1.3	B STA1= 1.3

	PPS1
Open FE Shutters	✓
FE Shutters A and B open (**green**)	✓
Water Permits A and B ON (**green**), HMI	✓
FE Shutter Permits A and B ON (**green**), HMI	✓
Using the valve, lower water flow to trip point	✓
FE Shutters A and B closed (**red**)	✓
In 5 seconds: FE Shutter Permits A and B OFF, HMI	✓
Water Permits A and B OFF, HMI	✓
Recorded STA A and B levels above; within 15%	✓
Return water flow to pretest values	✓
Water Permits A and B remain OFF, HMI	✓
Reset fault at PPS cabinet	✓
Water Permits A and B ON (**green**), HMI	✓
FE Shutter Permits A and B ON (**green**), HMI	✓

A17 ***Water Safety Test Amplifier Faults***

	PPS1
Open FE Shutters with keypad	✓
FE Shutters A and B open (**green**)	✓
Water Permits A and B ON (**green**), HMI	✓
FE Shutter Permits A and B ON (**green**), HMI	✓
Press A chain fault/reset button	✓
FE Shutters A and B closed (**red**)	✓
Water Permit A OFF, HMI	✓
In 5 seconds: FE Shutter Permit A OFF, HMI	✓
Reset fault	✓
Open FE Shutters with keypad	✓
FE Shutters A and B open (**green**)	✓
Water Permits A and B ON (**green**), HMI	✓
FE Shutter Permits A and B ON (**green**), HMI	✓
Press B chain fault/reset button	✓

	FE Shutters A and B closed (**red**)	✓
	Water Permit B OFF, HMI	✓
	In 5 seconds: FE Shutter Permit B OFF, HMI	✓
Reset fault		✓

A18 ***Observe Beamline Photon Shutter Operation***

Close Beamline Photon Shutter		✓
	Shutter indicates closed A and B (**red**), HMI	✓
Open Beamline Photon Shutter		✓
	Shutter opens smoothly without hesitation	✓
	Shutter indicates open A and B (**green**), HMI	✓
Close Beamline Photon Shutter		✓
	Shutter indicates closed A and B (**red**), HMI	✓

A19 ***Observe FE Safety Shutter(s) Operation***

With Maintenance Door open, connect FE Shutter test fixture.		✓
	Shutters are in the closed (down) position	✓
	FE Shutters A and B closed (**red**), HMI	✓
Turn the "Air" switch ON		✓
Open FE SSs A and B and Photon Shutter	Shutters open freely without hesitation	✓
	Shutters are in the open (up) position	✓
	FE Shutters A and B open (**green**), HMI	✓
Actuate Shutters closed	FE Shutters A and B closed (**red**), HMI	✓

A20 ***FE Safety Shutters Can Only be Closed if FE Photon Shutter is Closed***

Search hutch	FOE Interlocked A and B ON (**green**), HMI	✓
	FE Critical Device Permits A and B ON (**green**), HMI	✓
Open FE SSA	SSA Open	✓
Open FE Photon Shutter	FE Critical Device Permits A and B OFF, HMI	✓
Close Shutters		✓

Reset fault	FE Critical Device Permits A and B ON (**green**), HMI	✓
Open FE SSB	SSB Open	✓
Open FE Photon Shutter	FE Critical Device Permits A and B OFF, HMI	✓
Close Shutters		✓
Reset fault	FE Critical Device Permits A and B ON (**green**), HMI	✓

A21 ***Beamline Enable Key (Opening Shutter Without Key Trips SR RF and Dipole PS)***

Remove beamline enable key	Beamline Online A and B OFF	✓
Search FOE	FOE Interlocked A and B ON (**green**), HMI	✓
	FE Critical Device Permits A and B ON (**green**), HMI	✓
Using FE Shutter test fixture, Open FE Shutters	FE Critical Device Permits A and B OFF	✓
Using FE Shutter test fixture, Close FE Shutters		✓
Replace beamline enable key and reset faults	Beamline Online A and B ON (**green**)	✓
	FE Critical Device Permits A and B ON (**green**), HMI	✓

Live Testing

A22 ***Reach Back FOE Door Switches***

Secure P1 through P5	SR Secure, A and B chain, SR HMI	✓
Place actuators on FOE hutch door switches and Maglock		✓
Search hutch	FOE Interlocked A and B ON (**green**), HMI	✓
	FE Critical Device Permits A and B ON (**green**), HMI	✓
Check Control Room SR HMI (MCR beamline 1)	FE Critical Device Permit A and B ON (**green**), SR HMI	✓
Check I/O Box 18 Beamline Enable Panel	FE Critical Device Permits A and B LEDs ON	✓
Check I/O Box 28 Beamline Enable Panel	FE Critical Device Permit Sum A and B LEDs ON	✓
Check Dipole PS (positive) Beamline Interface	A and B Permits ON, Dipole PS Pos. Interface	✓
Check Dipole PS (negative) Beamline Interface	A and B Permits ON, Dipole PS Neg. Interface	✓
Check SR RF System C HVPS Beamline Interface	A and B Permits ON, SR RF System C HVPS Interface	✓
Check SR RF System D HVPS Beamline Interface	A and B Permits ON, SR RF System D HVPS Interface	✓
Operator enables SR Dipole PS	SR Dipole PS is ON	✓

Operator enables SR RF System C HVPS	SR RF System C HVPS is ON	√
Operator enables SR RF System D HVPS	SR RF System D HVPS is ON	√
Using FE Shutter test fixture, open the FE Shutters (SSA, SSB and Photon)		√
	FE Shutters open	√
*Remove an "**A chain**" door switch actuator from beamline hutch door*		√
	FOE Interlocked A OFF, HMI	√
	FE Critical Device Permit A OFF, HMI	√
Check I/O Box 18 Beamline Enable Panel	FE Critical Device Permit A LED OFF	√
Check I/O Box 28 Beamline Enable Panel	FE Critical Device Permit Sum A LED OFF	√
Check Control Room SR HMI (MCR beamline 1)	FE Critical Device Permit A OFF (**red**), SR HMI	√
Check SR RF System C HVPS Beamline Interface	A Permit OFF, SR RF System C HVPS Interface	√
Check SR RF System D HVPS Beamline Interface	A Permit OFF, SR RF System D HVPS Interface	√
Check Dipole PS (positive) Beamline Interface	A Permit OFF, Dipole PS Pos. Interface	√
Check Dipole PS (negative) Beamline Interface	A Permit OFF, Dipole PS Neg. Interface	√
	SR RF System C HVPS is OFF	√
	SR RF System D HVPS is OFF	√
	SR Dipole PS is OFF	√
Close FE Shutters with FE Shutter test fixture	FE Shutters closed	√
Replace ***"A chain"*** door switch actuator and reset fault(s)		√
Search hutch		√
	FOE Interlocked A and B ON (**green**), HMI	√
	FE Critical Device Permits A and B ON (**green**), HMI	√
Check Control Room SR HMI (MCR beamline 1)	FE Critical Device Permit A and B ON (**green**), SR HMI	√
Check I/O Box 18 Beamline Enable Panel	FE Critical Device Permits A and B LEDs ON	√
Check I/O Box 28 Beamline Enable Panel	FE Critical Device Permit Sum A and B LEDs ON	√
Check Dipole PS (positive) Beamline Interface	A and B Permits ON, Dipole PS Pos. Interface	√
Check Dipole PS (negative) Beamline Interface	A and B Permits ON, Dipole PS Neg. Interface	√
Check SR RF System C HVPS Beamline Interface	A and B Permits ON, SR RF System C HVPS Interface	√
Check SR RF System D HVPS Beamline Interface	A and B Permits ON, SR RF System D HVPS Interface	√

Operator enables SR Dipole PS	SR Dipole PS is ON	√
Operator enables SR RF System C HVPS	SR RF System C HVPS is ON	√
Operator enables SR RF System D HVPS	SR RF System D HVPS is ON	√
Using FE Shutter test fixture, open the FE Shutters (SSA, SSB and Photon)		√
	FE Shutters open	√
Remove "***B chain***" switch actuator	FOE Interlocked B OFF, HMI	√
	FE Critical Device Permit B OFF, HMI	√
Check I/O Box 18 Beamline Enable Panel	FE Critical Device Permit B LED OFF	√
Check Control Room SR HMI (MCR beamline 1)	FE Critical Device Permit B OFF (**red**), SR HMI	√
Check I/O Box 28 Beamline Enable Panel	FE Critical Device Permit Sum B LED OFF	√
Check SR RF System C HVPS Beamline Interface	B Permit OFF, SR RF System C HVPS Interface	√
Check SR RF System D HVPS Beamline Interface	B Permit OFF, SR RF System D HVPS Interface	√
Check Dipole PS (positive) Beamline Interface	B Permit OFF, Dipole PS Pos. Interface	√
Check Dipole PS (negative) Beamline Interface	B Permit OFF, Dipole PS Neg. Interface	√
	SR Dipole PS is OFF	√
	SR RF System C HVPS is OFF	√
	SR RF System D HVPS is OFF	√
Close FE Shutters with FE Shutter test fixture	FE Shutters closed	√
Remove beamline hutch switch actuators and Maglock actuator		√

A23 ***Water Interlock (Live)***

Search FOE	FOE Interlocked A and B ON (**green**), HMI	√
	FE Shutter Permits A and B ON (**green**), HMI	√
	FE Critical Device Permits A and B ON (**green**), HMI	√
Check I/O Box 18 Beamline Enable Panel	FE Critical Device Permits A and B LEDs ON	√
Check I/O Box 28 Beamline Enable Panel	FE Critical Device Permit Sum A and B LEDs ON	√
Check Control Room SR HMI (MCR beamline 1)	FE Critical Device Permit A and B ON (**green**), SR HMI	√
Check Dipole PS (positive) Beamline Interface	A and B Permits ON, Dipole PS Pos. Interface	√
Check Dipole PS (negative) Beamline Interface	A and B Permits ON, Dipole PS Neg. Interface	√

Check SR RF System C HVPS Beamline Interface	A and B Permits ON, SR RF System C HVPS Interface	✓
Check SR RF System D HVPS Beamline Interface	A and B Permits ON, SR RF System C HVPS Interface	✓
Operator enables SR Dipole PS	SR Dipole PS is ON	✓
Operator enables SR RF System C HVPS	SR RF System C HVPS is ON	✓
Operator enables SR RF System D HVPS	SR RF System D HVPS is ON	✓
Using FE Shutter test fixture, turn on air and open SSs then Photon Shutter		✓
	FE Shutters indicate open (**green**), HMI	✓
Using water trip points in step A16, lower flow to one meter		✓
	Water Permits A and B OFF, HMI	✓
Within 5 seconds	FE Shutter Permits A and B OFF, HMI	✓
	FE Critical Device Permits A and B OFF, HMI	✓
Check I/O Box 18 Beamline Enable Panel	FE Critical Device Permits A and B LEDs OFF	✓
Check I/O Box 28 Beamline Enable Panel	FE Critical Device Permit Sum A and B LEDs OFF	✓
Check Control Room SR HMI (MCR beamline 1)	FE Critical Device Permit A and B OFF (**red**), SR HMI	✓
Check SR RF System C HVPS Beamline Interface	A and B Permits OFF, SR RF System C HVPS Interface	✓
Check SR RF System D HVPS Beamline Interface	A and B Permits OFF, SR RF System D HVPS Interface	✓
Check Dipole PS (positive) Beamline Interface	A and B Permits OFF, Dipole PS Pos. Interface	✓
Check Dipole PS (negative) Beamline Interface	A and B Permits OFF, Dipole PS Neg. Interface	✓
	SR RF System C HVPS is OFF	✓
	SR RF System D HVPS is OFF	✓
	SR Dipole PS is OFF	✓
Close FE Shutters with FE Shutter test fixture	FE Shutters closed	✓
Return water flow to recorded level		✓
Reset fault(s)		✓

A24 ***Observe All Shutters Closed Sum***

Check I/O Box 28 Beamline Enable Panel	FE Shutters closed A chain light ON	✓
	FE Shutters closed B chain light ON	✓
Using FE Shutter test fixture open both FE SSs and then Photon Shutter		✓

	FE Shutters open (green), HMI	✓
Check I/O Box 28 Beamline Enable Panel	FE Shutters closed A chain light OFF	✓
	FE Shutters closed B chain light OFF	✓
Close FE Shutters and remove FE Shutter test fixture		✓

A25 ***FOE Area Radiation Monitor***

Refer to PS-C-ASD-PRC-008, *NSLS-II Area Radiation Monitor PPS Test* and complete Attachment D, *NSLS-II Beamline (FOE) Area Radiation Monitor Checklist.*

FRM 18-ID Test Checklist Completed	✓

A26 ***Test Completion***

Inspect all hutch doors and labyrinths to ensure all PPS switch and Maglock actuators have been removed	✓
Return Beamline enable key and Beamline PPS reset key to the Control Room	✓
Remove muffler from beam imminent sounder	✓
Ensure PPS cabinets are secure and locked; challenge locks	✓
Remove all LOTO	✓
Inform Lead Operator that testing is complete	✓

- END -

Reviewed by:

9/28/2017

X Scott Buda

Scott Buda
Accelerator Safety Systems Group Leader
Signed by: Buda, Scott

9/28/2017

X Robert Chmiel

Robert Chmiel
NSLS-II Safety Officer
Signed by: Chmiel, Robert

Approved by:

9/28/2017

X

Robert Lee
NSLS-II ESH Manager
Signed by: Lee, Robert J

Revision History

Revision	Description	Date
1	First Issue.	28SEP2017

The only official copy of this document is the one online in the SharePoint Document Center. Before using a printed copy, verify that it is current by checking the printed document's version history log (p.ii) with that of the online version.

Attachment D
NSLS-II Beamline (FOE) Area Radiation Monitor Checklist

Note: Signatures below indicate that the test has been completed. DET# IN07241

Monitor # FRM-ID18	**ID #** IN07569	**Beamline:** 18ID
Test Reason: ☑ **Beamline Certification**	☐ **Replacement/Repair**	
Test Date: 9/25/2017	**Test Result** ☑ **Passed**	☐ **Failed**
Tester : Thomas McDonald	**RCD:** J Dobrid	
Tester Signature: Thomas O. McDonald	**RCD Signature:** [illegible]	

Fail Alarm: Place checkmark (✓) in checkbox (☐) for each correct response.

	Local Expected Observation	HMI/CR Expected Observation	Linac HMI	CR HMI
Operator turns on Gun	Gun HVPS is ON ☑	Gun Contactor ON A Chain	☑	☑
RCD Disables Monitor		Alarm sounds in Control Room		☑
	Fail alarm ON HMI (yellow border around ARM icon)		☑	☑
Silence CR Alarm		Alarm silences		☑
Gun turns OFF	Gun HVPS is OFF ☑	Gun Contactor OFF A Chain	☑	☑
Return monitor to normal	Gun HVPS remains OFF ☑	Fail alarm remains ON HMI	☑	☑
Reset fault in Control Room		Monitor normal HMI	☑	☑
RCD ensures ARM is locked	ARM is locked ☑			

Low Alarm: Place checkmark (✓) in checkbox (☐) for each correct response.

	Local Expected Observation	HMI/CR Expected Observation	Beamline HMI	CR HMI/EPICS
Opens FE shutter (w/keypad)	FE Shutters open ☑		☑	☑
Apply source until low alarm	Yellow light on Monitor ☑	Radiation level increases on EPICS		☑
	FE Shutters Closed ☑	Alarm sounds in Control Room		☑
		Low level alarm ON, HMI	☑	☑
Return monitor to normal		Monitor normal, HMI	☑	☑
	FE Critical Device Permit A chain ON		☑	☑
Apply source until low alarm	Yellow light on Monitor ☑			☑
	FE Critical Device Permit A chain OFF		☑	☑
Return monitor to normal		Monitor normal, HMI	☑	☑

High Alarm: Place checkmark (✓) in checkbox (☐) for each correct response.

	Local Expected Observation	HMI/CR Expected Observation	Linac HMI	CR HMI/EPICS
Operator turns on Gun	Gun HVPS is ON ☑	Gun Contactor ON A Chain	☑	☑
Apply source until high alarm	Red light on Monitor ☑	Radiation level increases on EPICS		☑
	Monitor alarm sounds	Alarm sounds in Control Room		☑
		High level alarm ON, HMI	☑	☑
Silence Alarm		Alarm silences		☑
Gun turns OFF	Gun HVPS is OFF ☑	Gun Contactor OFF A Chain	☑	☑
Return monitor to normal	Gun HVPS remains OFF ☑	High level alarm remains ON, HMI	☑	☑
Reset fault in Control Room		Monitor normal, HMI	☑	☑

Description of Test Failures (if any):_____

Inspection/Test Record

BROOKHAVEN NATIONAL LABORATORY

Photon Sciences Directorate
National Synchrotron Light Source II

Document Title: **Hutch Door PPS Mechanical Inspection (Caratelli Rolling Door)**

Beamline: 18 ID

Door Location: 18 ID A **Type:** Left / Right
(circle one)

Reference Names / Nomenclature

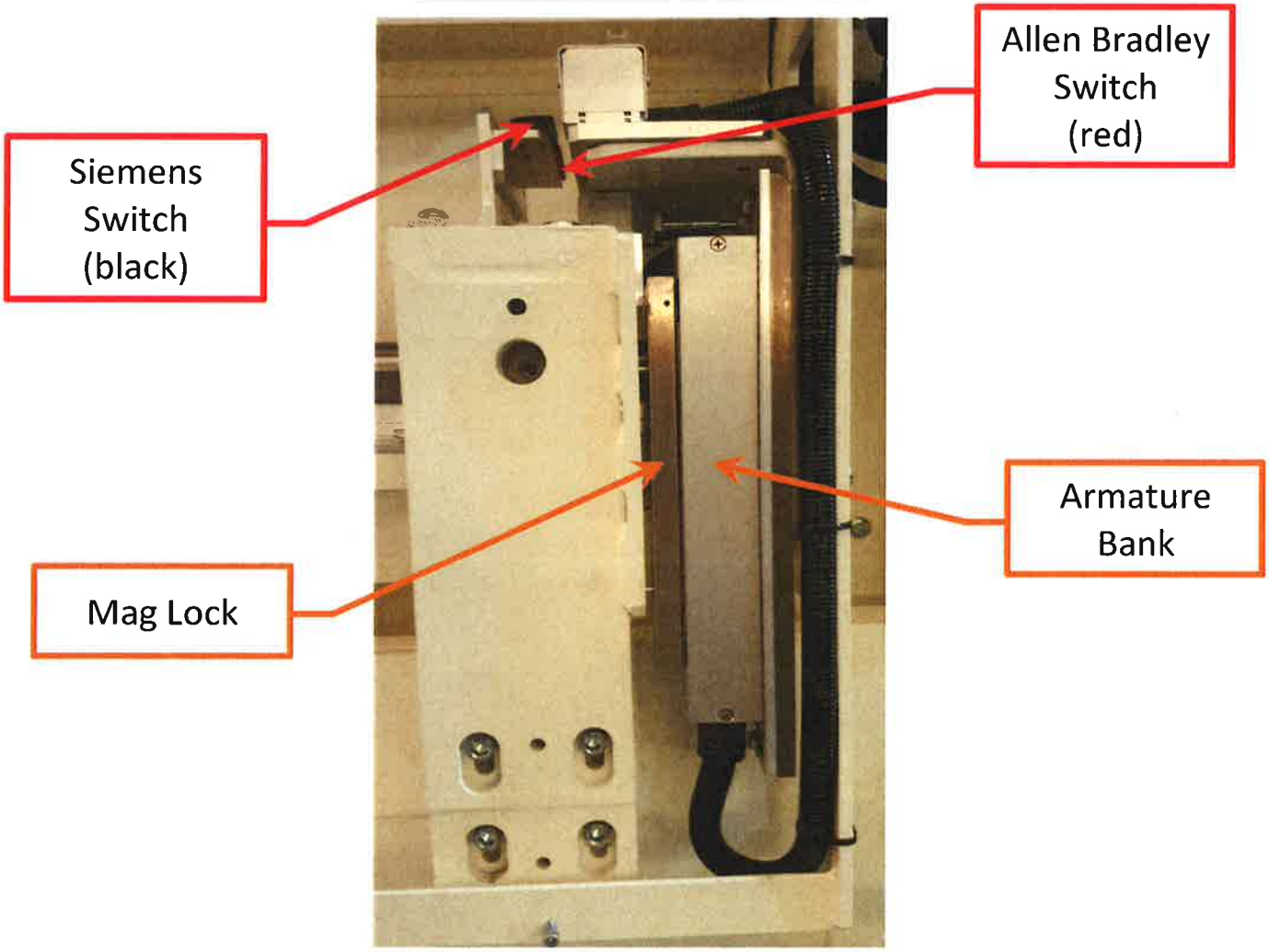

Figure 1a. PPS Lock Shown in Closed Position (Side View)

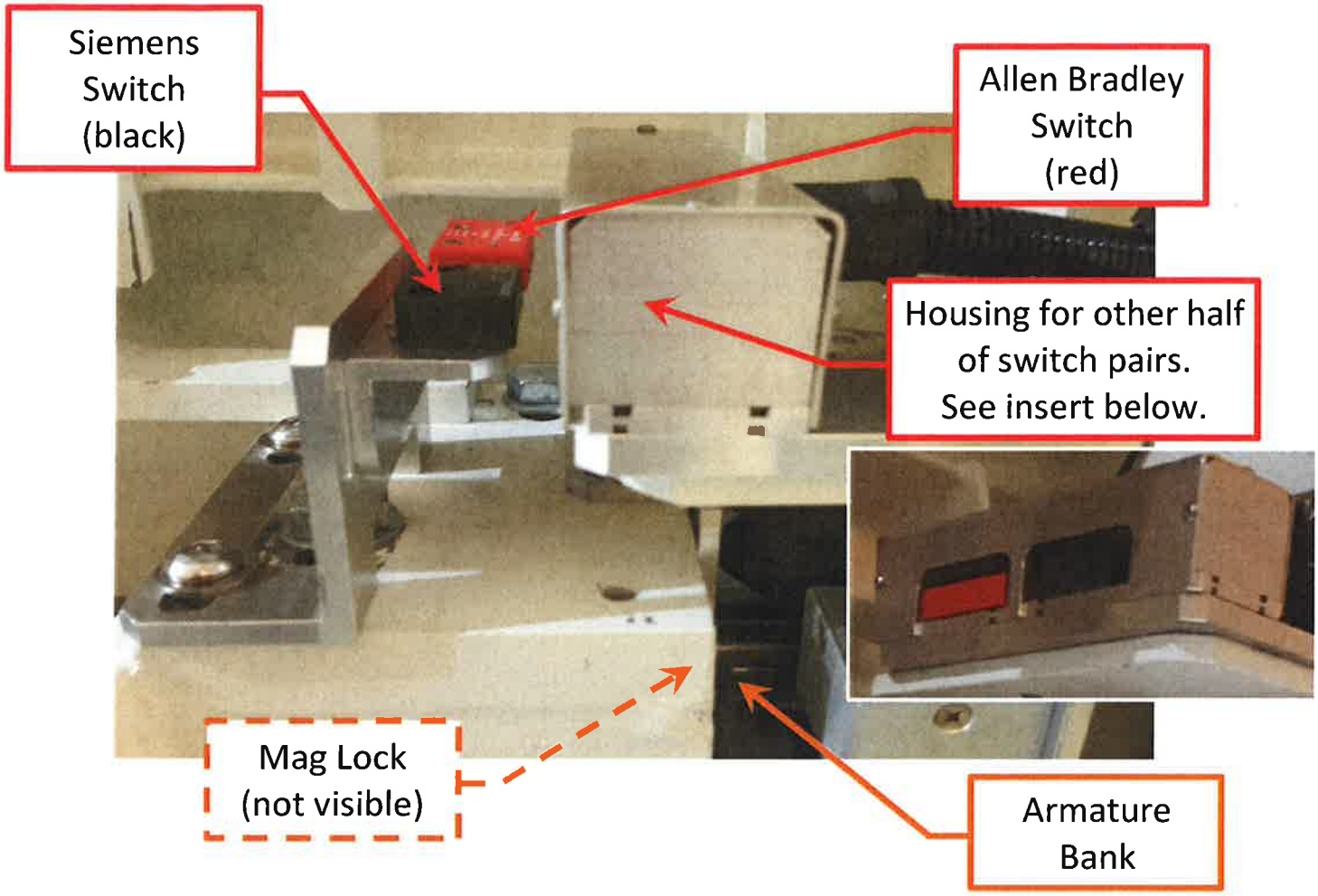

Figure 1b. PPS Lock Shown in Closed Position (Close up of top portion))

(Left-hand door shown above, right-hand is similar, mirror image)

2) Use 1/4" precision spacer to set gap between Allen Bradley Switch Halves and Siemens Switch Halves

ID	Inspection Description	Nominal Gap	Gap Tolerance	Pass / Fail	DR #	Name/Life #	Date
2	Gap between Switch Halves	0.25" EW	+0.0"/ - 0.003"			Ed Weigand 15372	9-8-17

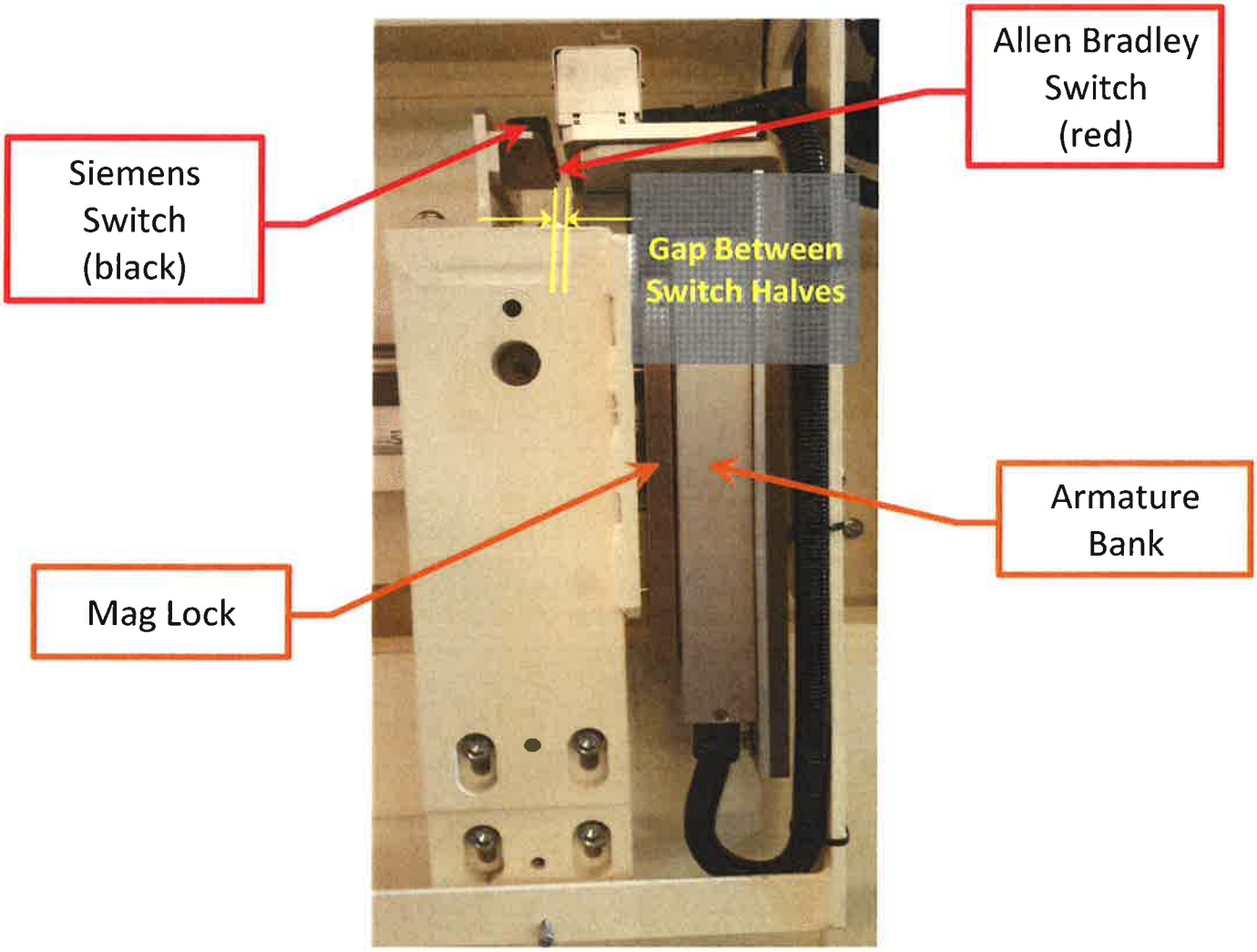

Figure 3. Operation #2: Gap Between Switch Halves

Submitted By: Ed weigand — *Print Name* — Ed Weigand 9-8-17 — *Signature / Date*

Approvals (ready for certification)

Cognizant Engineer: Christopher Fay — *Approved By (Print Name)* — Christopher F 9/8/2017 — *Signature / Date*

Op #

1) **Close door and ensure there is contact between mag lock and armature bank**

ID	Inspection Description	Pass / Fail	DR #	Name/Life #	Date
1	Contact between Mag Lock and Armature			Ed Weyand	9-8-17

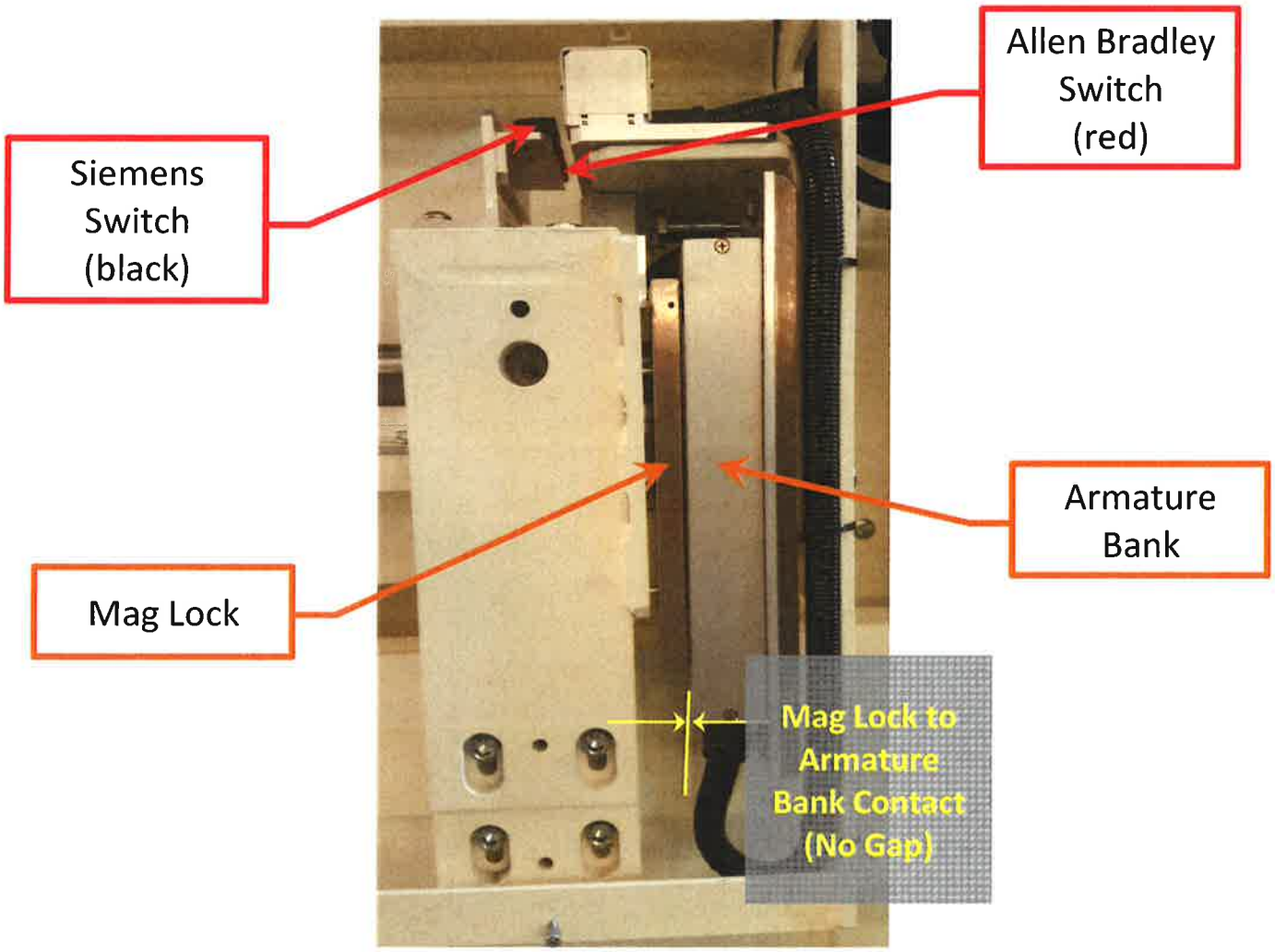

Figure 2. Operation #1: Mag Lock to Armature Gap

Inspection/Test Record

BROOKHAVEN NATIONAL LABORATORY

Photon Sciences Directorate
National Synchrotron Light Source II

Document Title: **Hutch Door PPS Mechanical Inspection (Caratelli Rolling Door)**

Beamline: 18 ID

Door Location: 18 ID A **Type:** Left / Right *(circle one)*

Reference Names / Nomenclature

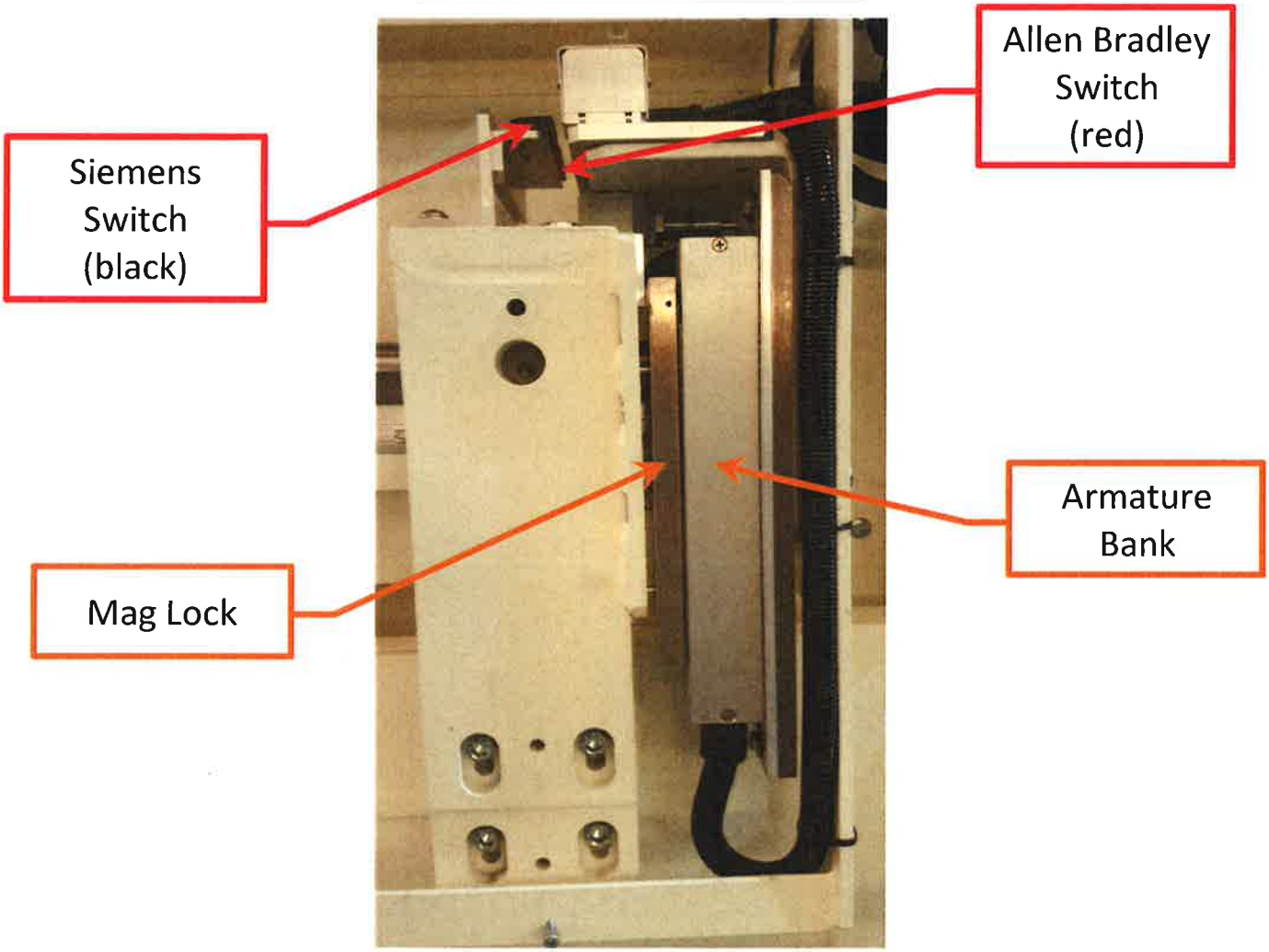

Figure 1a. PPS Lock Shown in Closed Position (Side View)

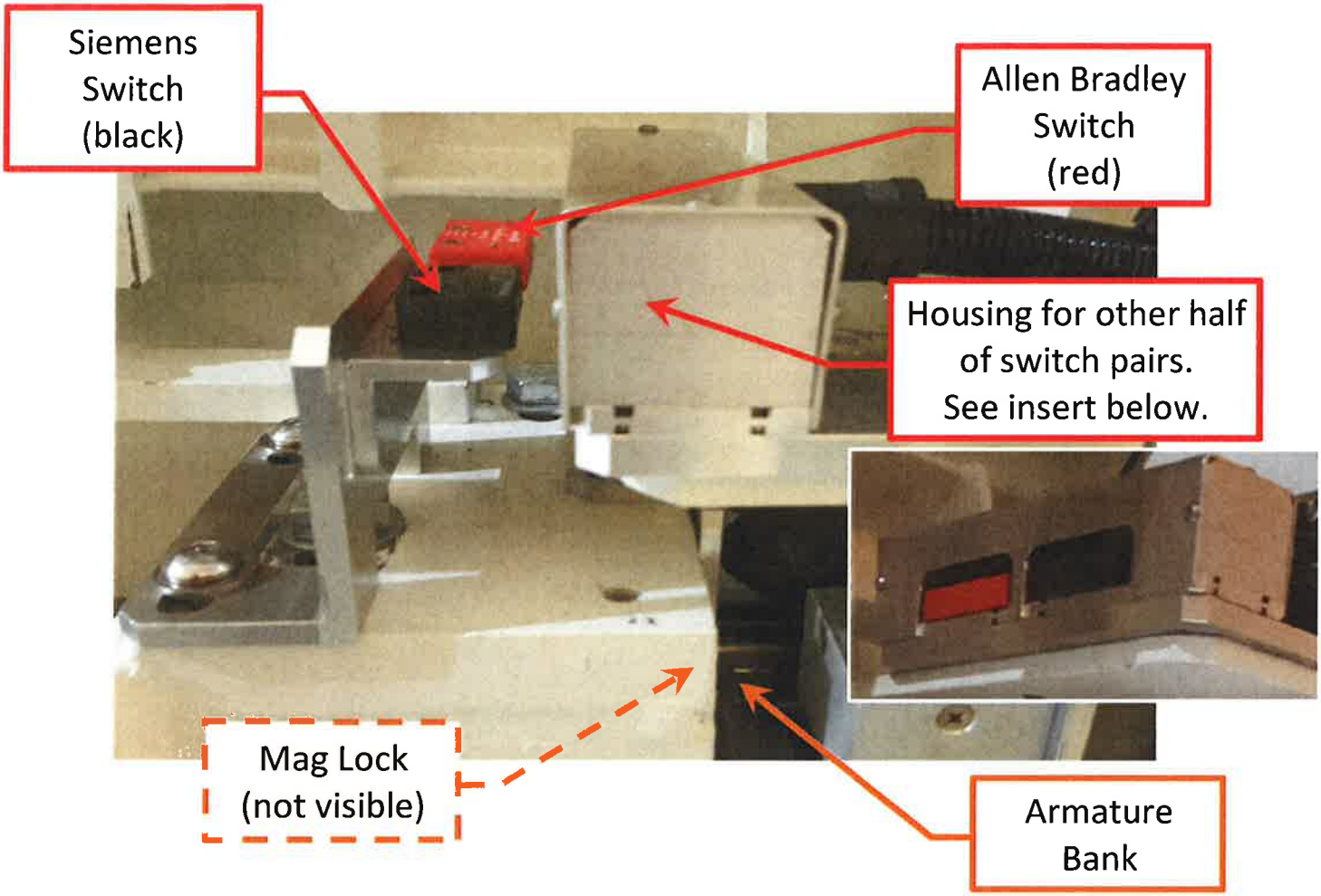

Figure 1b. PPS Lock Shown in Closed Position (Close up of top portion))

(Left-hand door shown above, right-hand is similar, mirror image)

Op #

1) **Close door and ensure there is contact between mag lock and armature bank**

ID	Inspection Description	Pass / Fail	DR #	Name/Life #	Date
1	Contact between Mag Lock and Armature			[illegible]	9-8-17

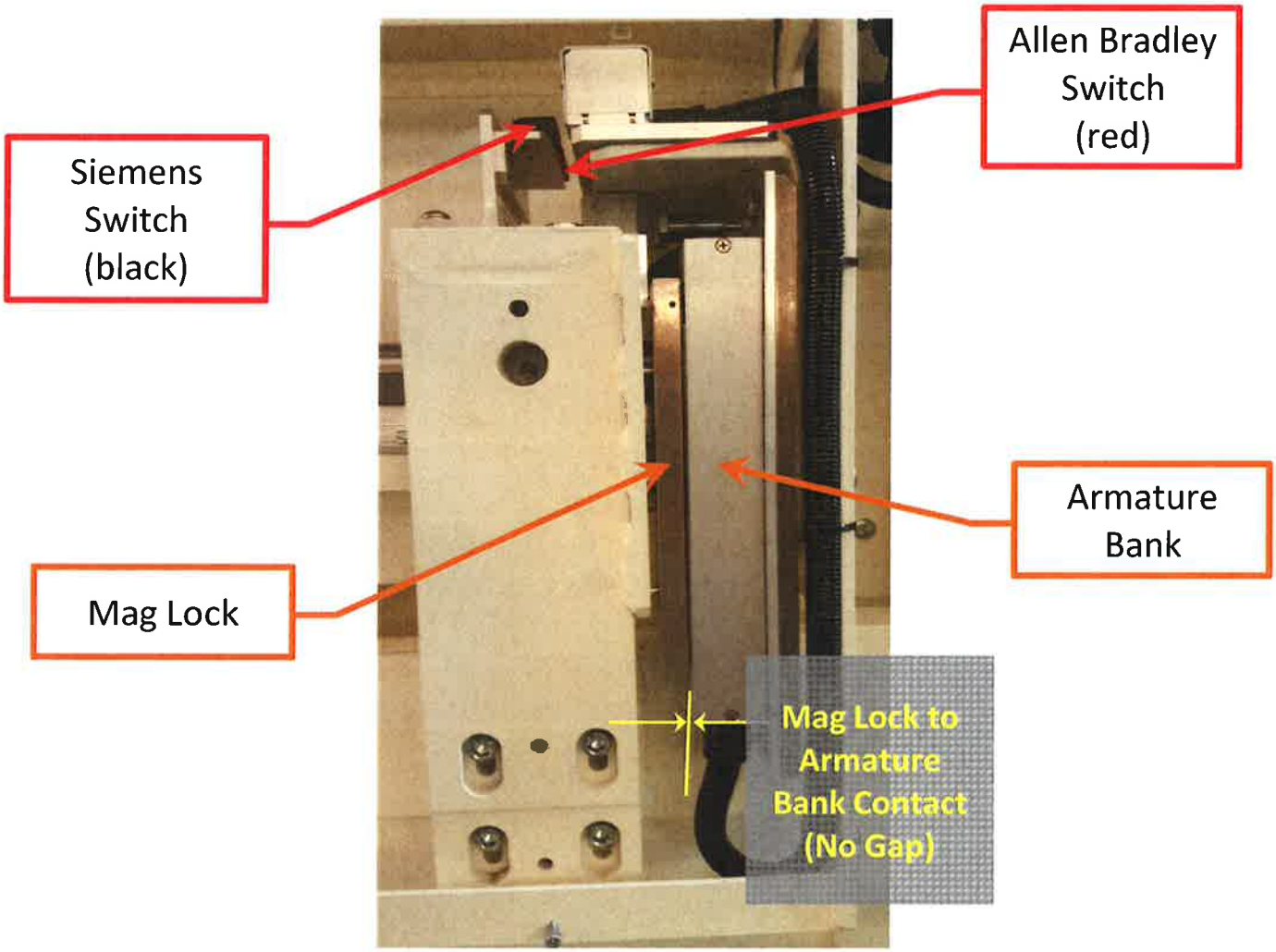

Figure 2. Operation #1: Mag Lock to Armature Gap

2) Use 1/4" precision spacer to set gap between Allen Bradley Switch Halves and Siemens Switch Halves

ID	Inspection Description	Nominal Gap	Gap Tolerance	Pass / Fail	DR #	Name/Life #	Date
2	Gap between Switch Halves	0.250" EW	+0.0"/ - 0.003"			Ed Weigand 15372	9-8-17

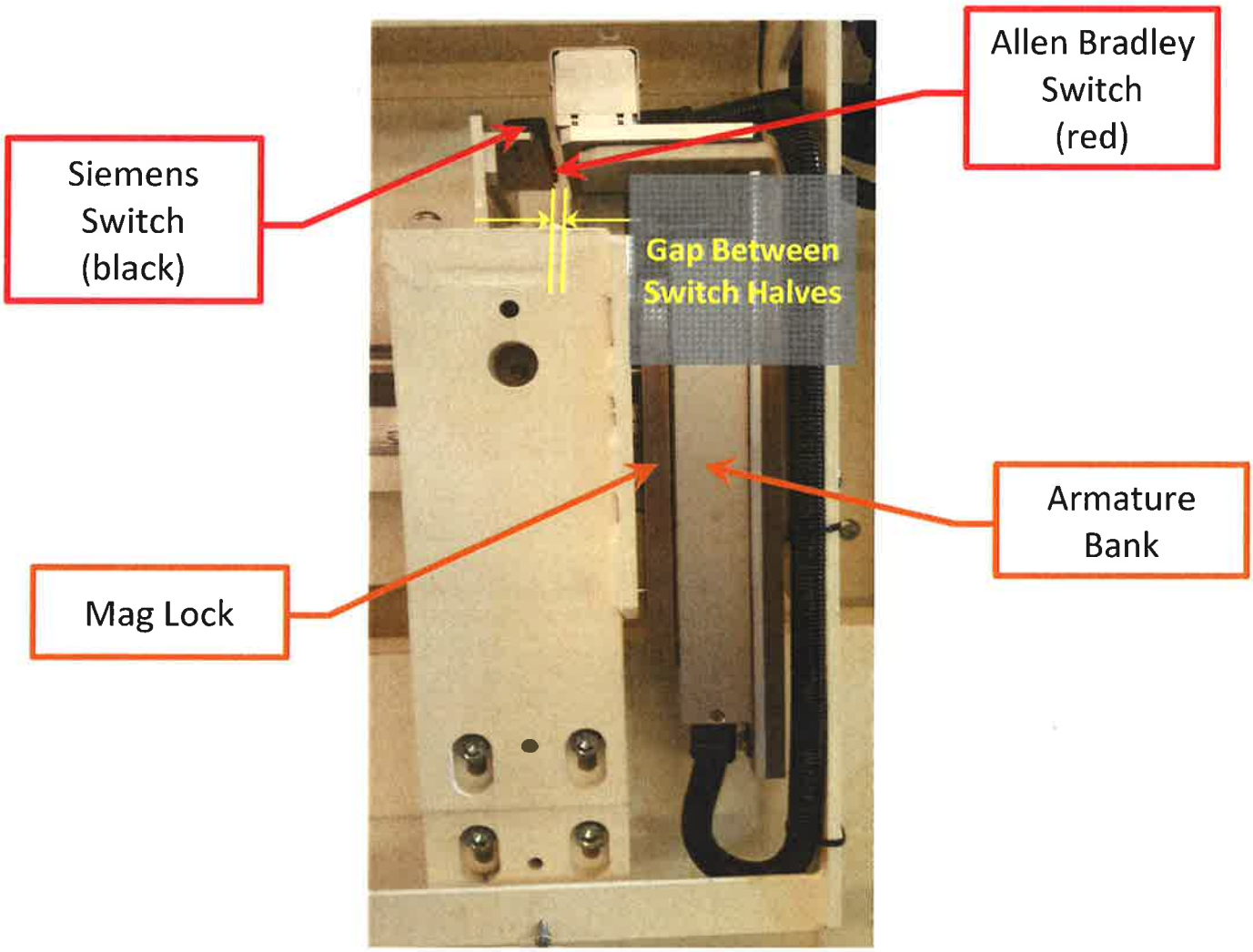

Figure 3. Operation #2: Gap Between Switch Halves

Submitted By: Ed Weigand — *Print Name* — Ed Weigand 9-8-17 — *Signature / Date*

Approvals (ready for certification)

Cognizant Engineer: Christopher Eng — *Approved By (Print Name)* — Christopher Eng 9/8/2017 — *Signature / Date*

Inspection/Test Record

BROOKHAVEN NATIONAL LABORATORY

Photon Sciences Directorate
National Synchrotron Light Source II

Document Title: **Hutch Labyrinth Door PPS Switch Mechanical Inspection Configuration 3**

Beamline: 18 ID A

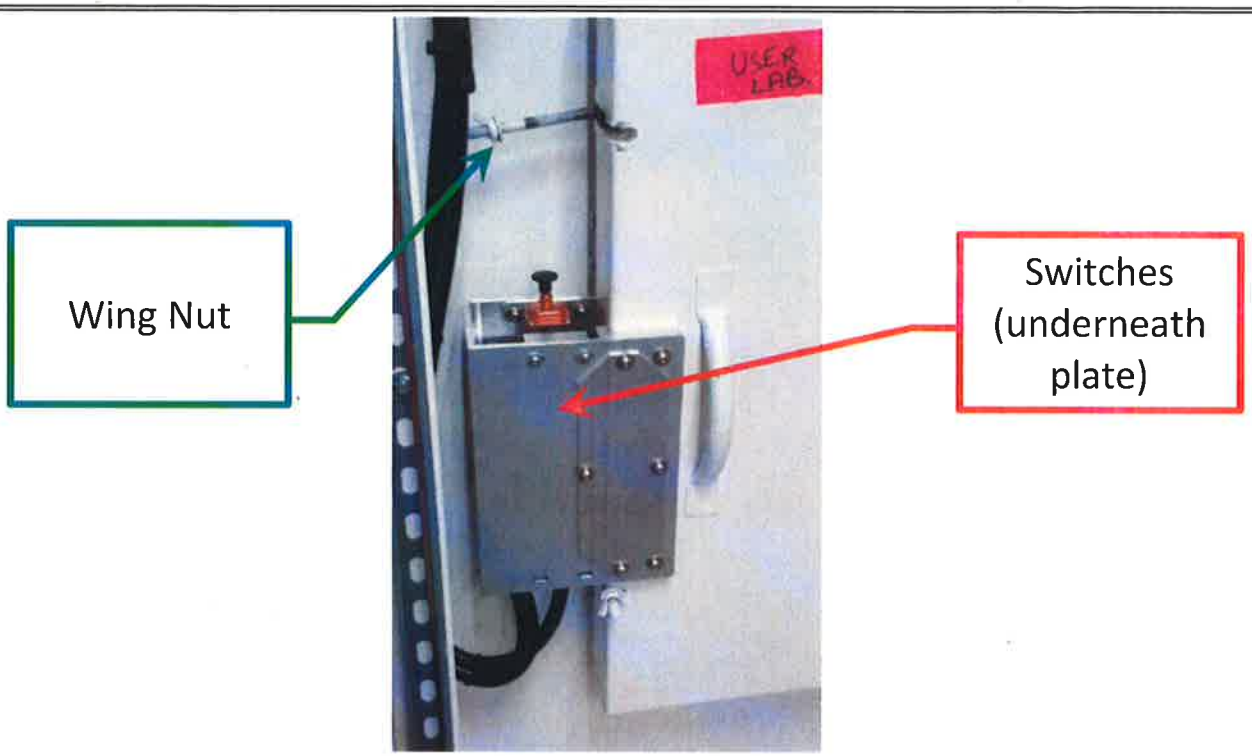

Figure 1. Hutch Wall Labyrinth Door PPS Lock (shown in closed position) (Switches obscured by plate.)

Op #

1) **Close labyrinth door.**

2) **Use precision spacer to set gap between Allen Bradley Switch Halves and Siemens Switch Halves**

ID	Inspection Description	Nominal Gap	Gap Tolerance	Pass / Fail	DR #	Name/Life #	Date
2	Gap between Switch Halves	0.20 "	+0.0"/ - 0.003"			Ed Weigand 15372	9-7-17

Submitted By: Ed WEIGAND — *Print Name* — Ed Weigand — *Signature / Date* 9-7-17

Approvals (ready for certification)

Cognizant Engineer: Christopher Eng — *Approved By (Print Name)* — Christopher Eng 9/8/2017 — *Signature / Date*

Inspection/Test Record

BROOKHAVEN NATIONAL LABORATORY

Photon Sciences Directorate
National Synchrotron Light Source II

Document Title: **Hutch Labyrinth Door PPS Switch Mechanical Inspection Configuration 3**

Beamline: 18 ID B

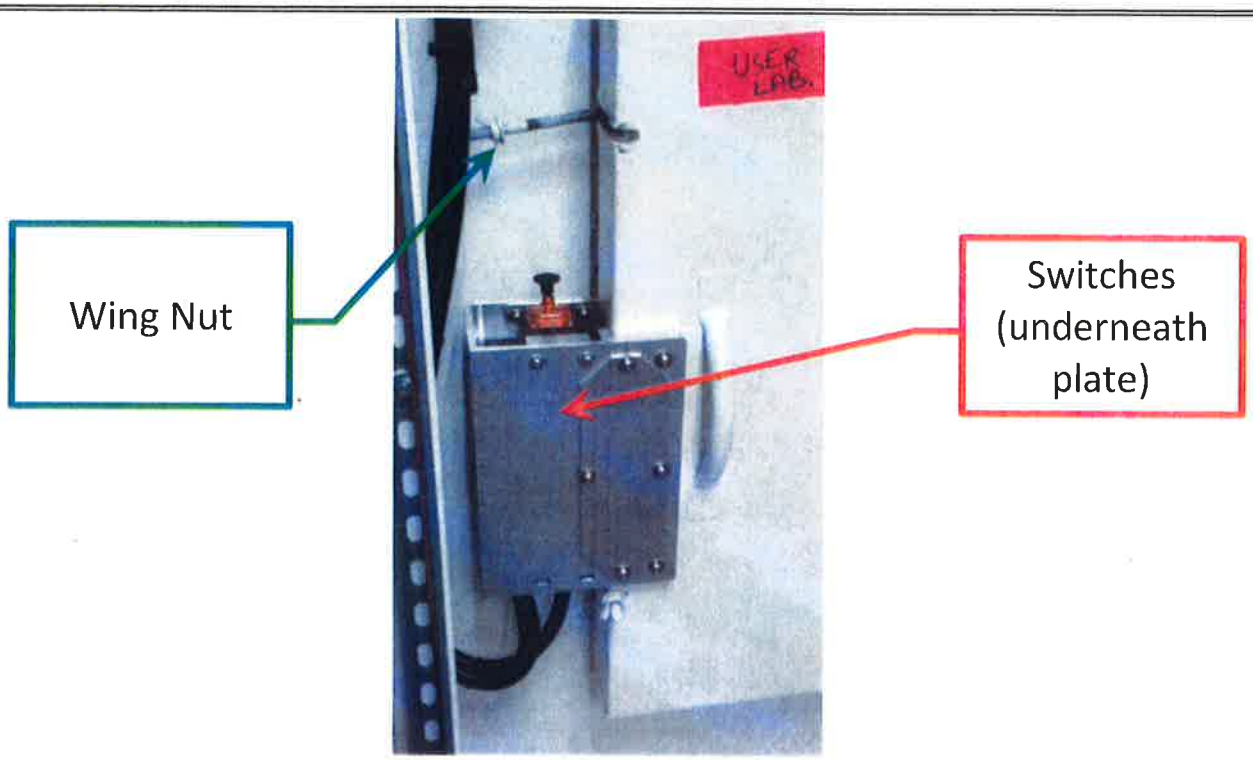

Figure 1. Hutch Wall Labyrinth Door PPS Lock (shown in closed position) (Switches obscured by plate.)

Op #

1) **Close labyrinth door.**

2) **Use precision spacer to set gap between Allen Bradley Switch Halves and Siemens Switch Halves**

ID	Inspection Description	Nominal Gap	Gap Tolerance	Pass / Fail	DR #	Name/Life #	Date
2	Gap between Switch Halves	0.20 "	+0.0"/ - 0.003"	Pass		EdWeight 15377	9-7-17

Submitted By: Ed Weightwd — *Print Name* — Ed Weight 9-7-17 — *Signature / Date*

Approvals (ready for certification)

Cognizant Engineer: Christopher Ery — *Approved By (Print Name)* — Christopher Ery 9/8/2017 — *Signature / Date*

Inspection/Test Record

BROOKHAVEN NATIONAL LABORATORY

Photon Sciences Directorate
National Synchrotron Light Source II

Document Title: **Hutch Door PPS Mechanical Inspection (Caratelli Rolling Door)**

Beamline: 18 ID

Door Location: 18 ID B **Type:** Left / Right (circle one)

Reference Names / Nomenclature

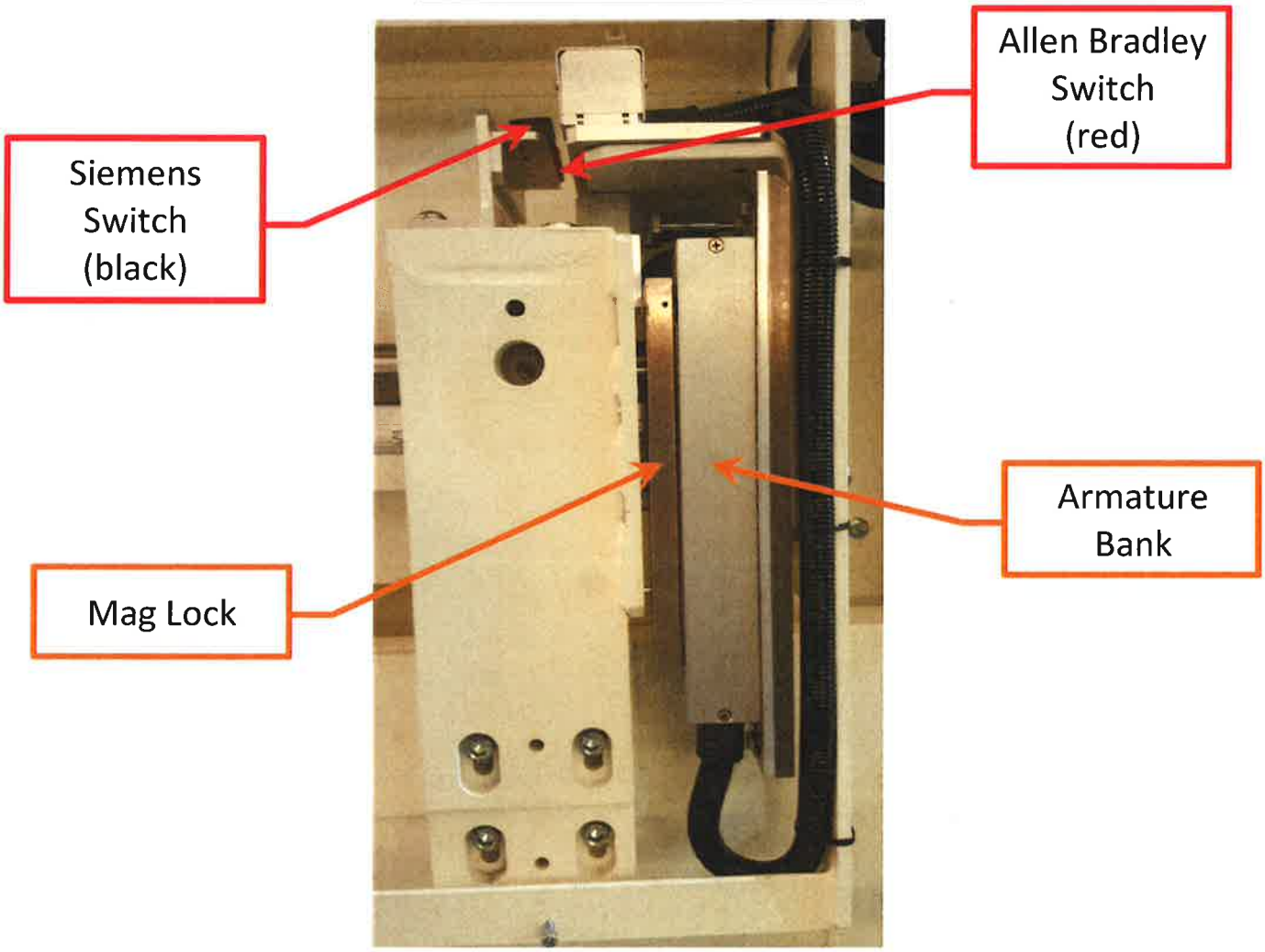

Figure 1a. PPS Lock Shown in Closed Position (Side View)

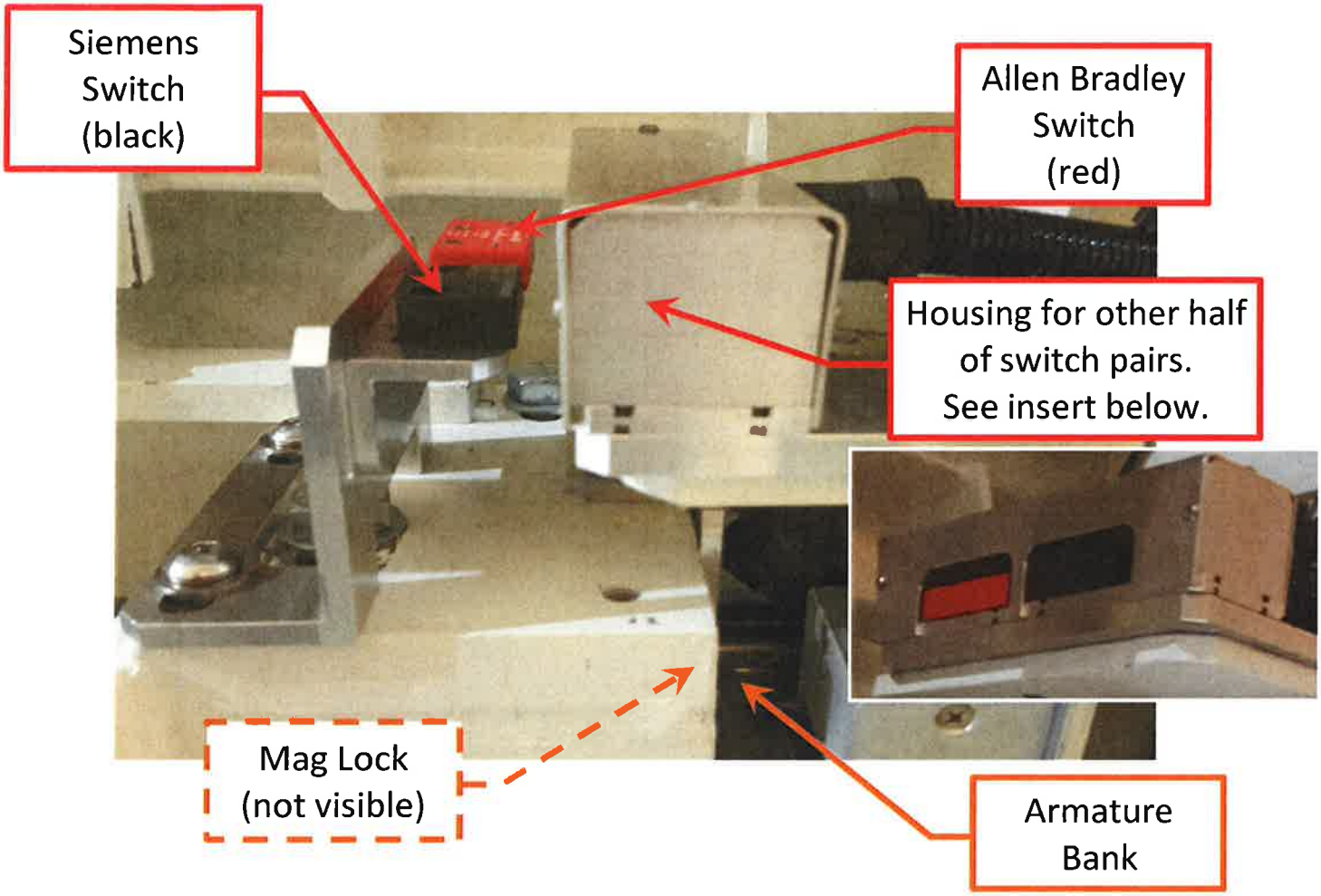

Figure 1b. PPS Lock Shown in Closed Position (Close up of top portion))

(Left-hand door shown above, right-hand is similar, mirror image)

Op #

1) **Close door and ensure there is contact between mag lock and armature bank**

ID	Inspection Description	Pass / Fail	DR #	Name/Life #	Date
1	Contact between Mag Lock and Armature			Ed Weigel 15372	9-13-17

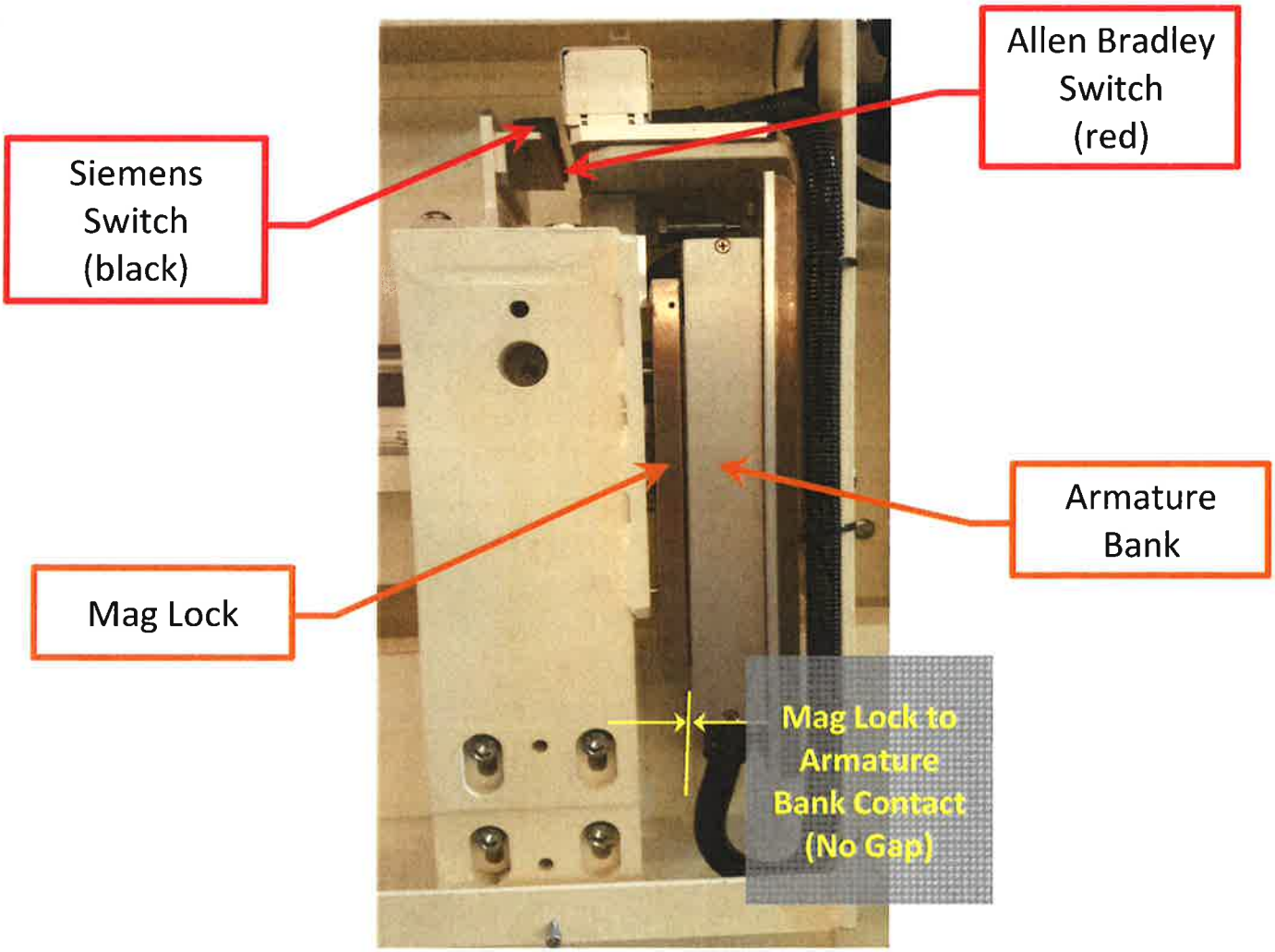

Figure 2. Operation #1: Mag Lock to Armature Gap

2) Use 1/4" precision spacer to set gap between Allen Bradley Switch Halves and Siemens Switch Halves

ID	Inspection Description	Nominal Gap	Gap Tolerance	Pass / Fail	DR #	Name/Life #	Date
2	Gap between Switch Halves	0.2[illegible]"	+0.0"/ - 0.003"			Ed Weigand 15377	9-13-17

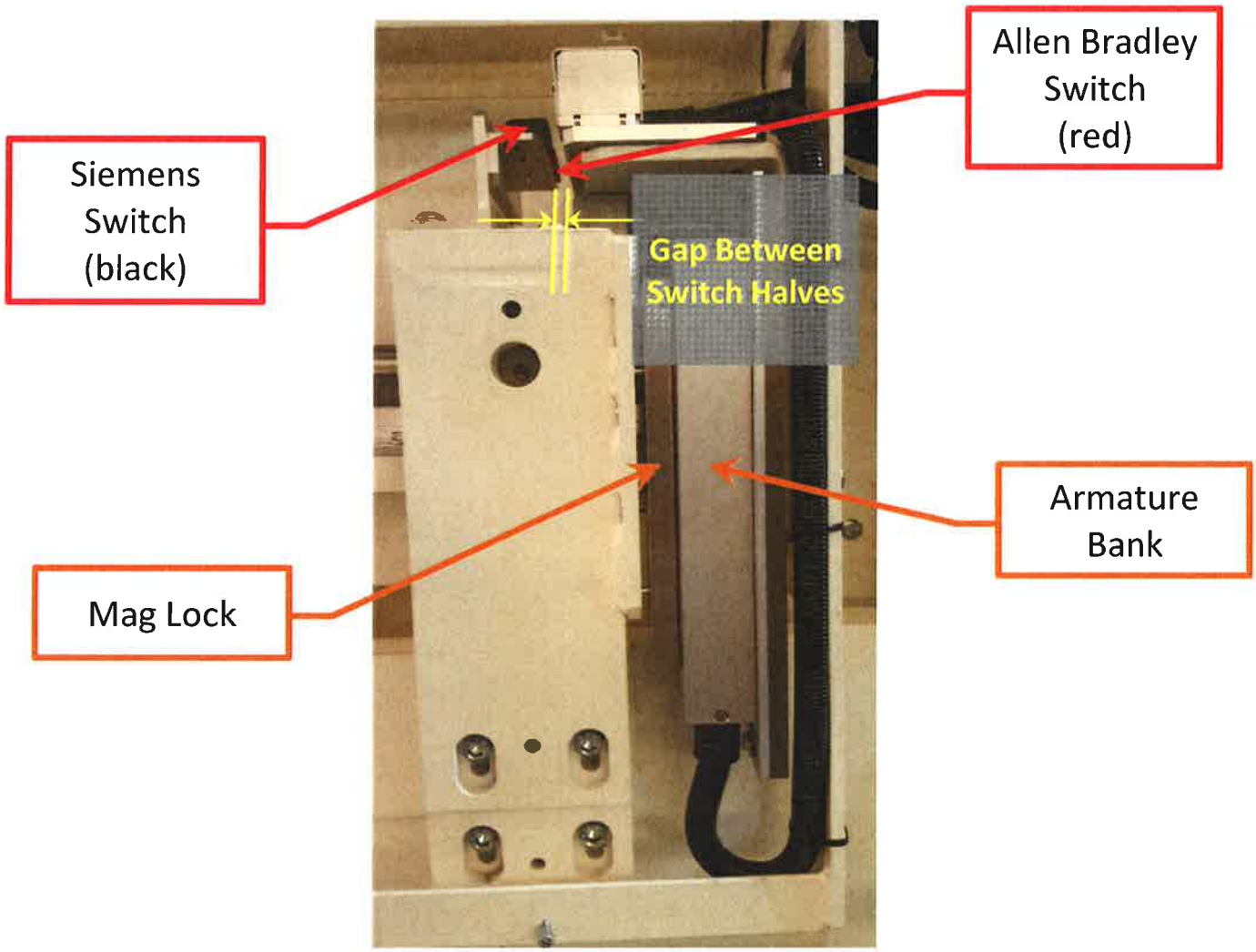

Figure 3. Operation #2: Gap Between Switch Halves

Submitted By: Ed Weigand — *Print Name* — Ed Weigand 9-13-17 — *Signature / Date*

Approvals (ready for certification)

Cognizant Engineer: CHRISTOPHER ENG — *Approved By (Print Name)* — Christopher E 9/18/2017 — *Signature / Date*

Inspection/Test Record

BROOKHAVEN NATIONAL LABORATORY

Photon Sciences Directorate
National Synchrotron Light Source II

Document Title: **Hutch Door PPS Mechanical Inspection (Caratelli Rolling Door)**

Beamline: 18 ID

Door Location: 18 ID B **Type:** Left / Right
(circle one)

Reference Names / Nomenclature

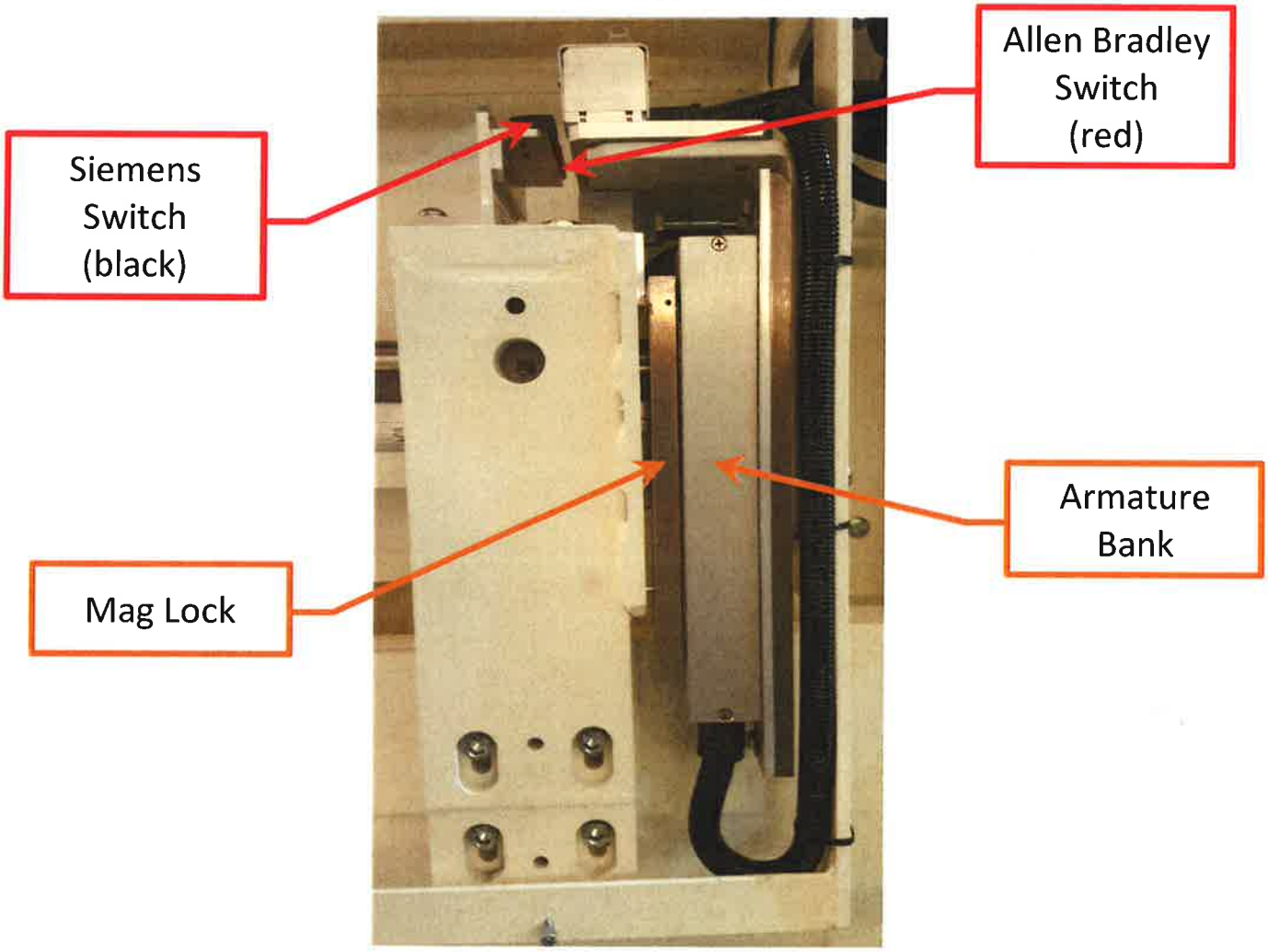

Figure 1a. PPS Lock Shown in Closed Position (Side View)

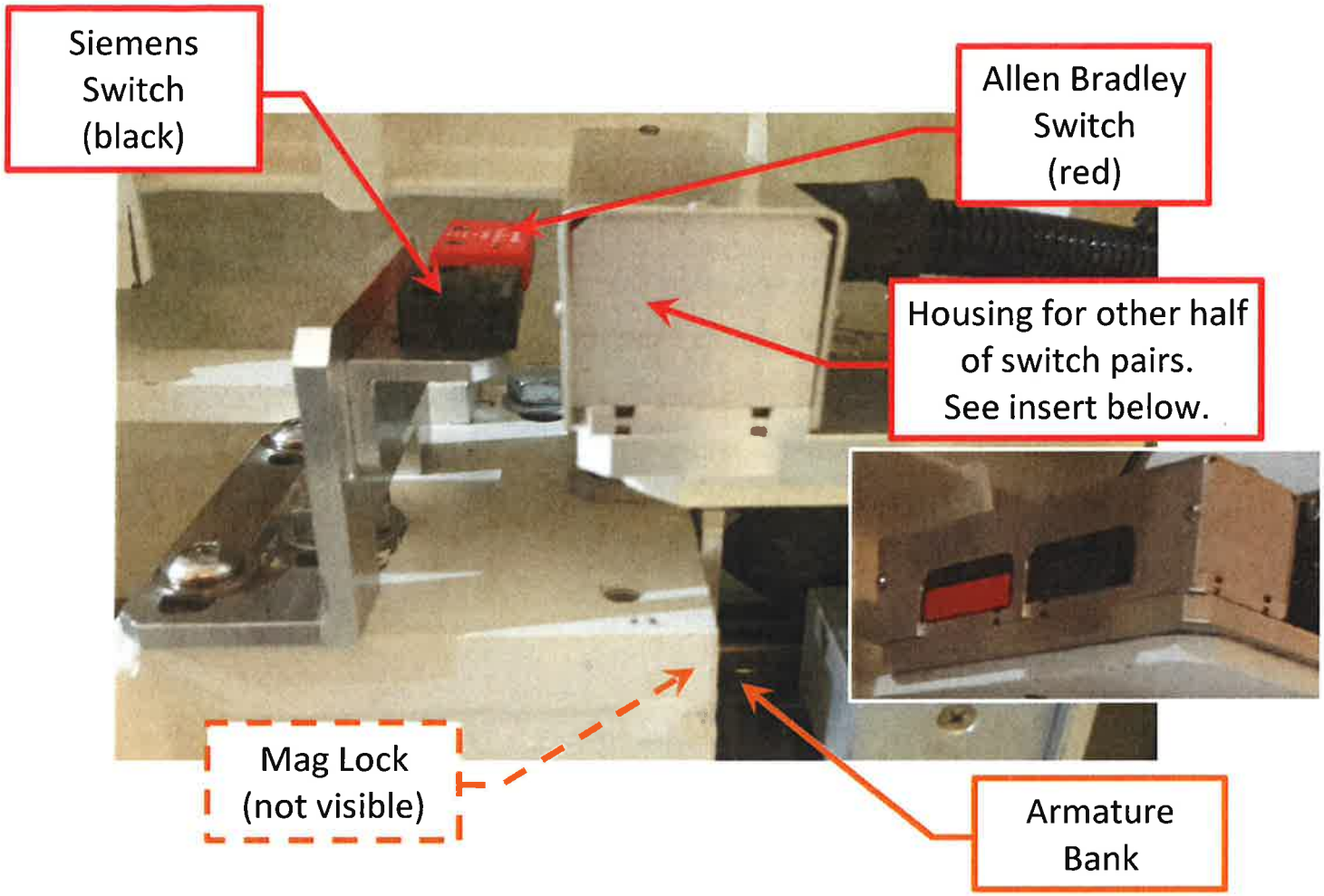

Figure 1b. PPS Lock Shown in Closed Position (Close up of top portion))

(Left-hand door shown above, right-hand is similar, mirror image)

Op #

1) **Close door and ensure there is contact between mag lock and armature bank**

ID	Inspection Description	Pass / Fail	DR #	Name/Life #	Date
1	Contact between Mag Lock and Armature	Pass		Ed Weyand 15372	9-13-17

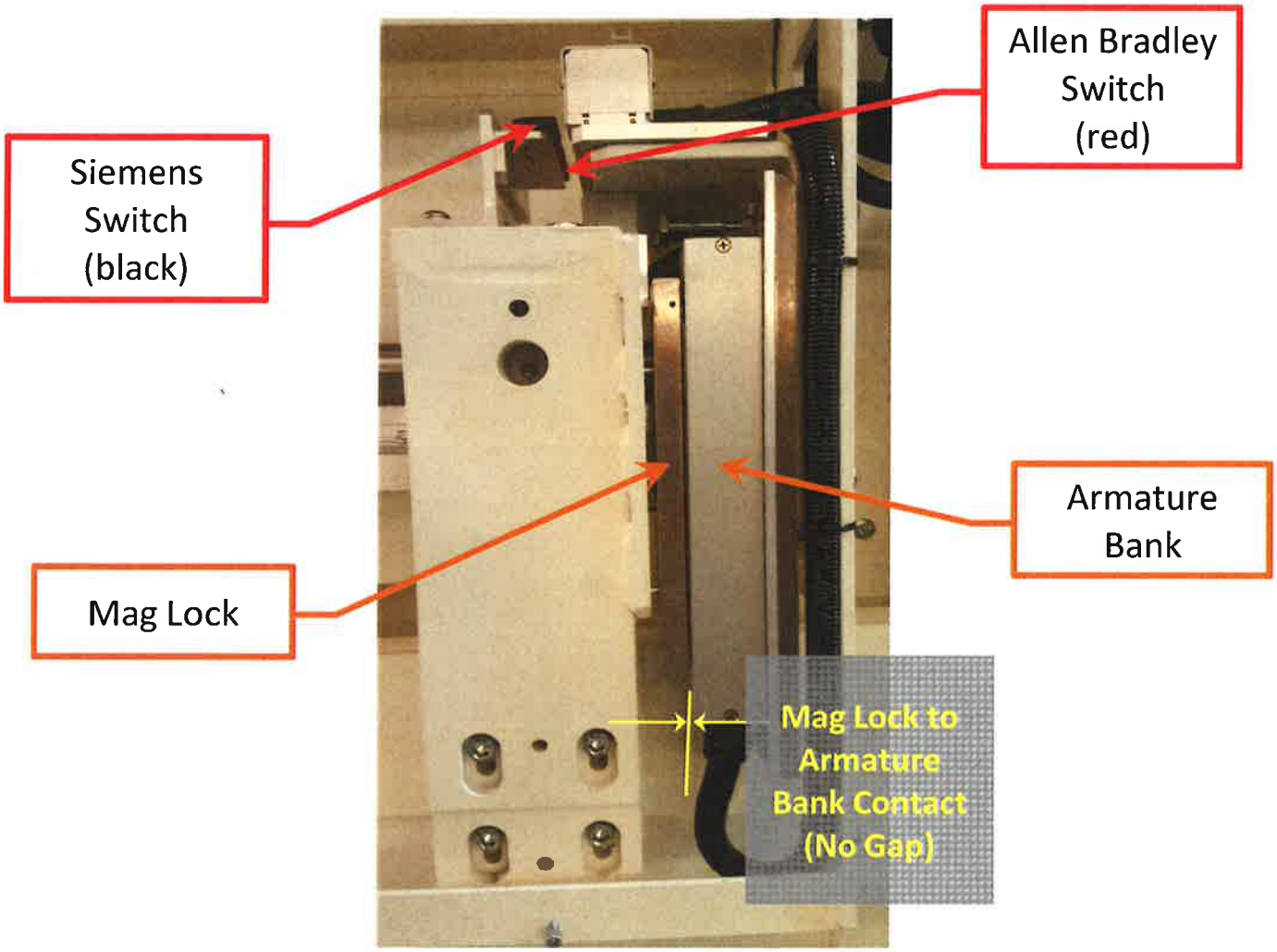

Figure 2. Operation #1: Mag Lock to Armature Gap

2) Use 1/4" precision spacer to set gap between Allen Bradley Switch Halves and Siemens Switch Halves

ID	Inspection Description	Nominal Gap	Gap Tolerance	Pass / Fail	DR #	Name/Life #	Date
2	Gap between Switch Halves	0.20" EW	+0.0"/ - 0.003"			Ed Weigand 15372	9-13-17

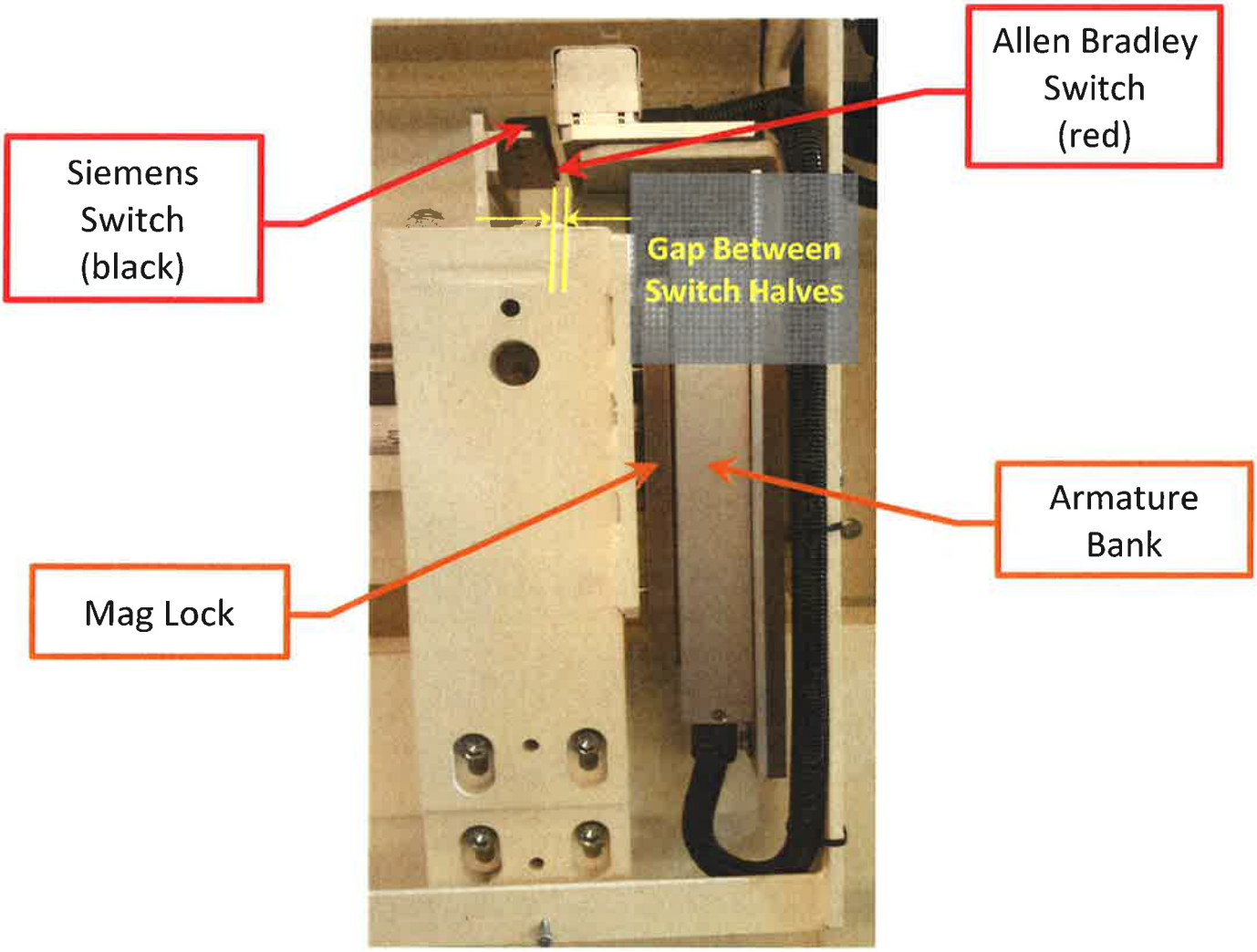

Figure 3. Operation #2: Gap Between Switch Halves

Submitted By: Ed Weigand — *Print Name* — Ed Weigand 9-13-17 — *Signature / Date*

Approvals (ready for certification)

Cognizant Engineer: CHRISTOPHER ENG — *Approved By (Print Name)* — Christopher Eng 9/18/2017 — *Signature / Date*

National Synchrotron Light Source

Building 743, National Synchrotron Light Source
Brookhaven National Laboratory
Upton, NY 11973-5000
Phone 631 344-2117
Fax 631 344-3238
zhong@bnl.gov

managed by Brookhaven Science Associates
for the U.S. Department of Energy

Memo

Date: August 22, 2017
To: George Ganetis, and Scott Buda
From: Zhong Zhong (chair), NSLS II Radiation Safety Committee
Subject: Radiation Safety Committee endorsement of the PPS design of 4-BM(XFM), 7-BM(QAS) and 18-ID (FXI) beamlines

Dear George and Scott

I would like to thank you for inviting the RSC sub-committee for PPS (personal protection system) interlock, Mohamed Benmerrouche, Dana Beavis, Robert Lee, and myself, to the review of the PPS logic diagrams for the 4-BM(XFM), 7-BM(QAS) and 18-ID (FXI) beamlines.

We reviewed the logic diagrams, sent beforehand on July 28, for the three beamlines. We then met with Scott Buda and George Ganetis on August 14, 2017 to discuss the drawings.

The following logic diagrams were reviewed:

1. Wiring diagram, 4-BM search logic, LT-EL-BL-EI-PPS-2040-96, rev. A by S. Buda.
2. Wiring diagram, 7-BM EESE B search logic, LT-EL-BL-EI-PPS-1070-96 rev. A by S. Buda
3. Wiring diagram, 18-ID search logic, LT-EL-BL-EI-PPS-1180-91 rev. A by S. Jarzabkowski.

We note that the PPS logic diagrams for these three beamlines, two three-pole wigglers and one damping wiggler, are similar to the operational NSLS-II beamlines.

While the IWG should be the primary reviewer for interlock logic diagrams, the RSC brings in broader expertise in areas such as radiation physics and PS shielding policy. This review by the RSC sub-committee compliments the recent shielding and ray-tracing reviews of XFM and QAS. The shielding and ray-tracing of FXI will be reviewed by the RSC in the future.

As a result of the sub-committee review, the RSC concurs that the PPS designs of 4-BM, 7-BM and 18-ID beamlines meet Photon Sciences shielding policy.

Radiation Safety Committee

Name	*Expertise*	*Directorate*
Andrew Ackerman	Deputy ESH Manager	PS
Andi Barbour	Beam Line Physicist	PS
Dana Beavis	Experimental Nuclear Particle Physics	NPP
Mohamed Benmerrouche	Nuclear and Radiation Physics	PS
Scott Buda	Personnel Protective Systems	PS
Ray Fliller	Accelerator Physicist	PS
Wah-Keat Lee	Beam Line Physicist	PS
Boris Podobedov	Accelerator Physics	PS
Chuck Schaefer	Accelerator SME	ESH
Lutz Wiegart	Beam Line Physicist	PS
Zhong Zhong	Beam Line Physicist	PS
Emil Zitvogel	Accelerator Operations	PS
Ashley Shoemaker-Skokov	Administrative Support	PS

Ray-tracing sub-committee

Andrew Ackerman	Deputy ESH Manager	PS
Mary Carlucci-Dayton	Mechanical Engineer	PS
Wah-Keat Lee	Beam Line Physicist	PS
Chuck Schaefer	Accelerator SME	ESH
Christopher Stelmach	Designer	PS
Lutz Wiegart	Beam Line Physicist	PS
Zhong Zhong	Beam Line Physicist	PS

PPS sub-committee

Dana Beavis	Experimental Nuclear Particle Physics	NPP
Mohamed Benmerrouche	Nuclear and Radiation Physics	PS
Scott Buda	Personnel Protective Systems	PS
Robert Lee	ESH manager	PS
Zhong Zhong	Beam Line Physicist	PS

REV	DESCRIPTION	BY	DATE	CHK	APP
A	INITIAL RELEASE	JARZABKOWSKI	10/03/2017	JM	AS

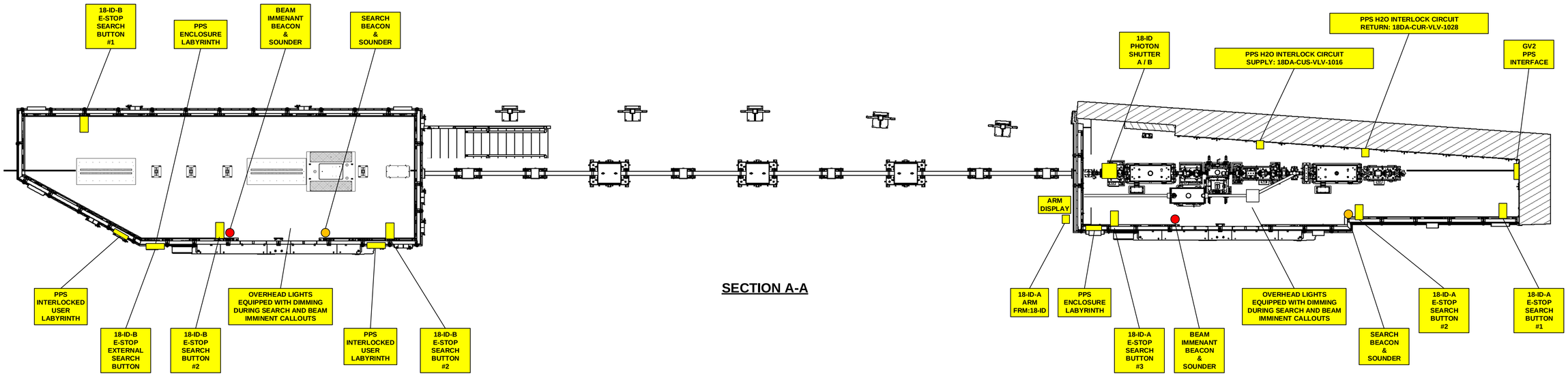

SECTION A-A

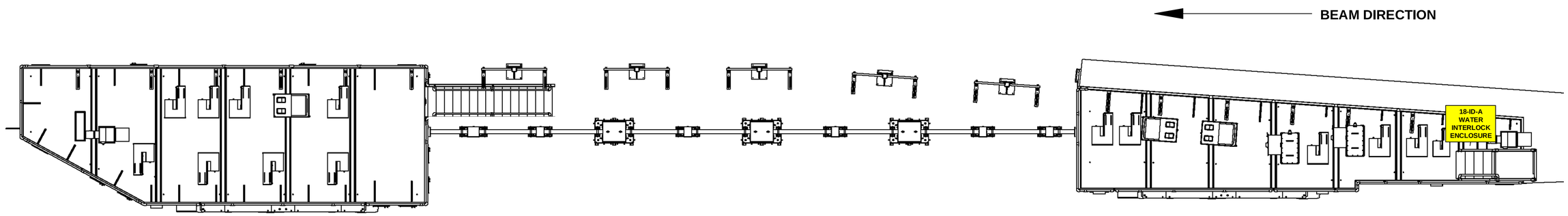

PLAN VIEW

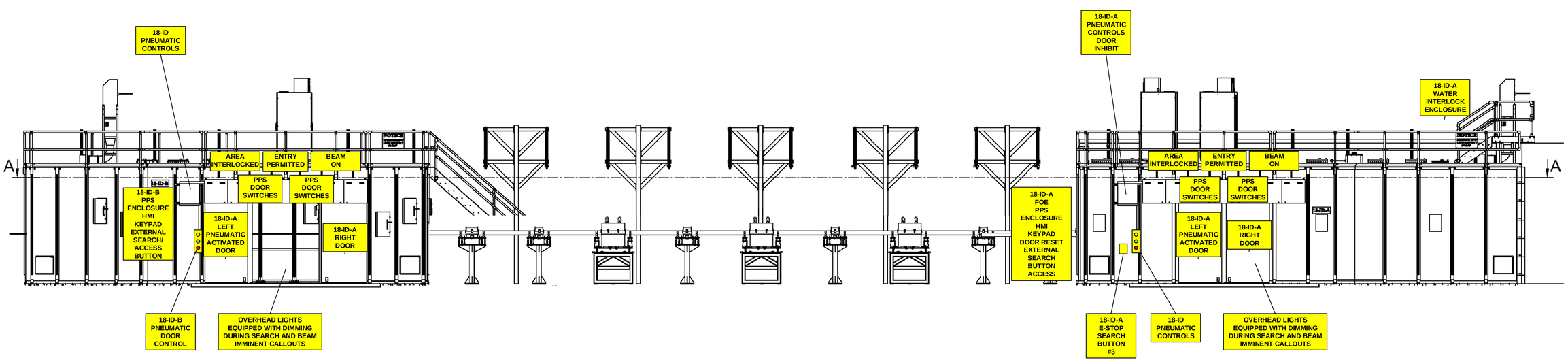

BROOKHAVEN NATIONAL LABORATORY

BROOKHAVEN NATIONAL LABORATORY
BROOKHAVEN SCIENCE ASSOCIATES
UPTON, NEW YORK 11973
Exploring Life's Mysteries, Protecting its Future

NSLS II NATIONAL SYNCHROTRON LIGHT SOURCE II

UNLESS OTHERWISE SPECIFIED
INTEGER TOLERANCES ± .06
DECIMAL TOLERANCES
.X ± .030
.XX ± .015
.XXX ± .010
ANGULAR TOLERANCE ± 0.5°
UNSPECIFIED RADII .02 MAX
125 BREAK SHARP CORNERS AND EDGES
FINISH MAX .03 MIN .005

UNLESS OTHERWISE SPECIFIED DIMENSIONS ARE IN INCHES DIMENSIONS IN [ ] ARE MILLIMETERS EQUIV. FOR REF. ONLY

ESH&Q RISK LEVEL A-2

INTERPRET DRAWING AS PER ANSI Y14.5 OR Y32.2

		DATE	OUTSTANDING ECN'S
DRWN BY	S. JARZABKOWSKI	10/03/2017	
CHK BY	J. MALLEY	10/04/2017	
ENG APP	S. BUDA	10/03/2017	
SUPV APP	G. GANETIS	10/04/2017	
QA APP	E. CHESWICK	10/03/2017	
ESH APP	R. LEE	10/04/2017	

JOB NUMBER | USED ON DWG. NO.

PPS EQUIPMENT LAYOUT DRAWING, FOR 18-ID HUTCH (FXI)

LT-EL-BL-EI — DRAWING DIRECTORY

LT-EL-BL-EI-HCH-1180 — DRAWING NUMBER

A — REV

COMPUTER REPRODUCABLE | SCALE: N/A | SHEET 1 OF 1

LT-EL-BL-EI-HCH-1180

FIRMWARE/SOFTWARE/PROGRAMMING LOGIC

DESCRIPTION:

FRONT END PPS MAIN CPU PROGRAM PENTANT 5 A CHAIN

PROGRAM	**Siemens Step 7**	
VERSION	**V5.5 + SP4**	
DEVICE	**SIEMENS CPU 319-3 PN/DP**	
OPERATING SYSTEM	**WINDOWS**	
PROGRAMMING METHOD	**SIEMENS STEP 7**	
FILE	**Pentant_5_Front End _Rev E**	

REV	DESCRIPTION	BY	DATE	CHK	APP
A	INITIAL RELEASE	MP	12/15/14	JM	SB
B	REVISED PER ECN 016-1453	MP	03/01/16	JM	SB
C	REVISED PER ECN 016-1461	MP	06/03/16	JM	SB
D	REVISED PER ECN 016-1601	MP	10/20/16	JM	SB
E	REVISED PER ECN 017-1814	MP	10/04/17	JM	SB

LT-EL-BL-EI-PPS-0101-74

BROOKHAVEN NATIONAL LABORATORY

BROOKHAVEN NATIONAL LABORATORY
BROOKHAVEN SCIENCE ASSOCIATES
UPTON, NEW YORK 11973
Exploring Life's Mysteries, Protecting its Future

NSLS II
NATIONAL SYNCHROTRON LIGHT SOURCE II

UNLESS OTHERWISE SPECIFIED
INTEGER TOLERANCES ± .06
DECIMAL TOLERANCES
.X ± .030
.XX ± .015
.XXX ± .010
ANGULAR TOLERANCE ± 0.5°
UNSPECIFIED RADII .02 MAX
125 FINISH — BREAK SHARP CORNERS AND EDGES
MAX .03 MIN .005

UNLESS OTHERWISE SPECIFIED DIMENSIONS ARE IN INCHES
DIMENSIONS IN [ ] ARE MILLIMETERS EQUIV. FOR REF. ONLY

ESH&Q RISK LEVEL A-1

INTERPRET DRAWING AS PER ANSI Y14.5 OR Y32.2

		DATE	OUTSTANDING ECN'S
DRWN BY	S.BUDA	12/15/14	
CHK BY	M.PFEFFER	12/15/14	
ENG APP	S.BUDA	12/15/14	
SUPV APP	G.GANETIS	01/07/15	
QA APP	E.CHESWICK	12/16/14	
ESH APP	B.LEE	**12/16/14**	

PROGRAMMABLE LOGIC

NSLS-II-PENTANT 5 FRONT END PPS CPU A CHAIN

LT-EL-BR-IN — DRAWING DIRECTORY
LT-EL-BL-EI-PPS-0101-74 — DRAWING NUMBER
E — REV

COMPUTER REPRODUCIBLE | SCALE: N/A | SHEET 1 OF 1

JOB NUMBER | USED ON DWG. NO.

FIRMWARE/SOFTWARE/PROGRAMMING LOGIC

DESCRIPTION:

FRONT END PPS MAIN CPU PROGRAM PENTANT 5 B CHAIN

PROGRAM	**RSLOGIX 5000**	
VERSION	**20.03**	
DEVICE	**ALLEN BRADLEY 1768 L43S**	
OPERATING SYSTEM	**WINDOWS**	
PROGRAMMING METHOD	**ETHERNET**	
FILE	**LT_EL_BL_EI_PPS_0101_84_Rev_E.ACD**	

REV	DESCRIPTION	BY	DATE	CHK	APP
A	INITIAL RELEASE	SB	10/23/14	MP	SB
B	REVISED PER ECN 015-1136	SB	1/22/16	MP	SB
C	REVISED PER ECN 016-1455	SB	4/04/16	MP	SB
D	REVISED PER ECN 016-1548	SX	9/29/16	MP	SB
E	REVISED PER ECN 017-1816	SX	8/29/17	MP	SB

LT-EL-BL-EI-PPS-0101-84

BROOKHAVEN NATIONAL LABORATORY

BROOKHAVEN NATIONAL LABORATORY
BROOKHAVEN SCIENCE ASSOCIATES
UPTON, NEW YORK 11973
Exploring Life's Mysteries, Protecting its Future

NSLS II
NATIONAL SYNCHROTRON LIGHT SOURCE II

UNLESS OTHERWISE SPECIFIED
INTEGER TOLERANCES
± .06
DECIMAL TOLERANCES
.X ± .030
.XX ± .015
.XXX ± .010
ANGULAR TOLERANCE ± 0.5°
UNSPECIFIED RADII .02 MAX
125 BREAK SHARP CORNERS AND EDGES
FINISH MAX .03 MIN .005

UNLESS OTHERWISE SPECIFIED DIMENSIONS ARE IN INCHES DIMENSIONS IN [*.**] ARE MILLIMETERS EQUIV. FOR REF. ONLY

ESH&Q RISK LEVEL A-1

INTERPRET DRAWING AS PER ANSI Y14.5 OR Y32.2

OUTSTANDING ECN'S

		DATE
DRWN BY	S.BUDA	10/23/14
CHK BY	M.PFEFFER	11-17-14
ENG APP	S.BUDA	11-17-14
SUPV APP	G.GANETIS	12-01-14
QA APP	E.CHESWICK	11-19-14
ESH APP	B.LEE	11-20-14

PROGRAMMABLE LOGIC

NSLS-II-FRONT END PPS MAIN CPU PROGRAM PENTANT 5 B CHAIN

LT-EL-BL-IN — DRAWING DIRECTORY
LT-EL-BL-EI-PPS-0101-84 — DRAWING NUMBER
E — REV

COMPUTER REPRODUCIBLE
SCALE: N/A
SHEET 1 OF 1

JOB NUMBER
USED ON DWG. NO.

REV	DESCRIPTION	DATE	BY	CHECKED	APP
A	INITIAL RELEASE	9/08/2014	SEJ	JM	SB
B	REVISED PER ECN LT-ECN-016-1604	9/08/2016	SEJ	JM	SB

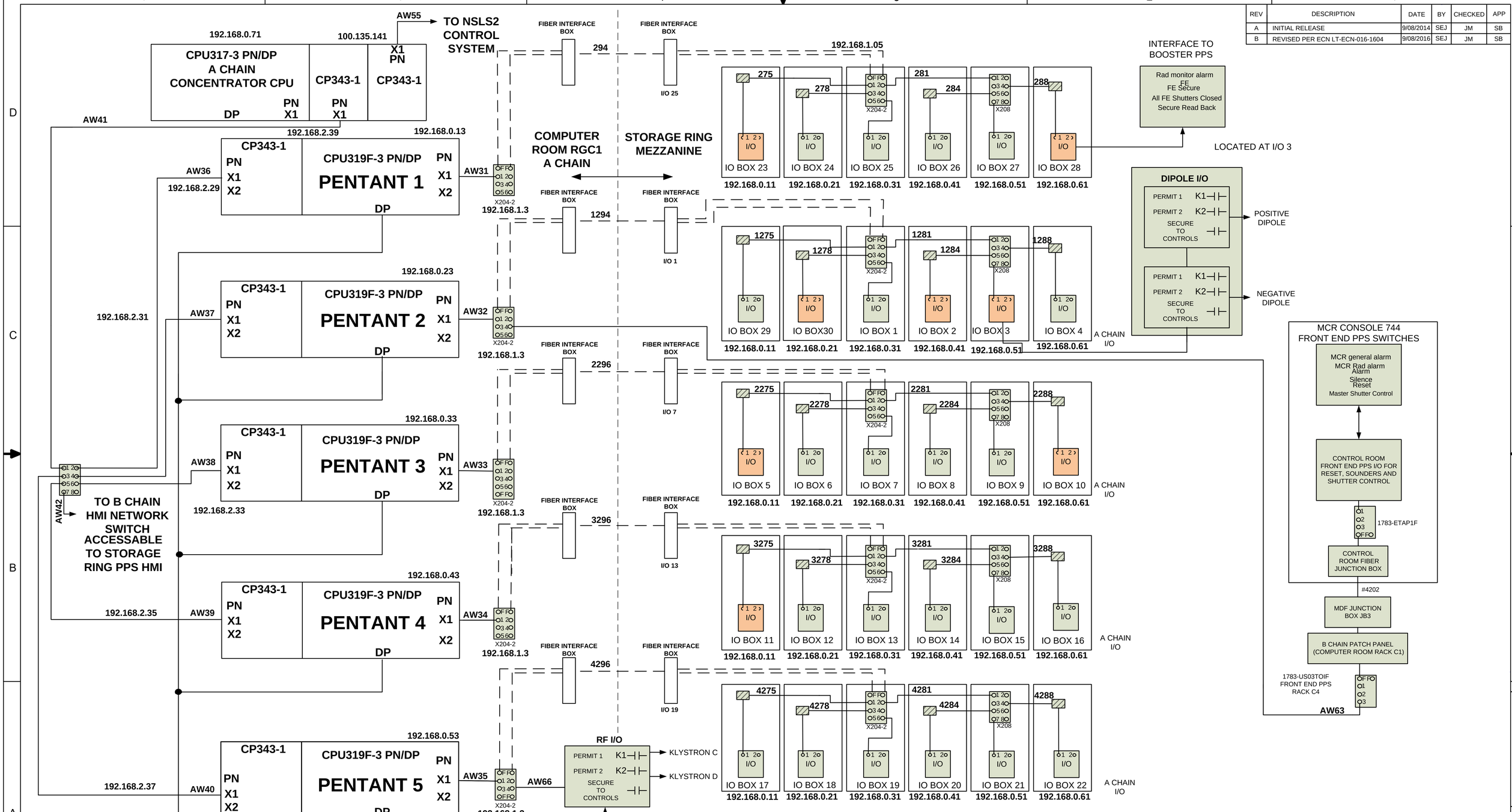

LT-EL-BL-EI-PPS-0101-90

BROOKHAVEN NATIONAL LABORATORY

BROOKHAVEN NATIONAL LABORATORY
BROOKHAVEN SCIENCE ASSOCIATES
UPTON, NEW YORK 11973
Exploring Life's Mysteries, Protecting Its Future

NSLSII NATIONAL SYNCHROTRON LIGHT SOURCE II

UNLESS OTHERWISE SPECIFIED INTEGER TOLERANCES ± .06
DECIMAL TOLERANCES .X ± .030 .XX ± .015 .XXX ± .010
ANGULAR TOLERANCE ± 0.5°
UNSPECIFIED RADII .02 MAX
125 BREAK SHARP CORNERS AND EDGES
FINISH MAX .03 MIN .005

UNLESS OTHERWISE SPECIFIED DIMENSIONS ARE IN INCHES DIMENSIONS IN [ ] ARE MILLIMETERS EQUIV. FOR REF. ONLY
INTERPRET DRAWING AS PER ANSI Y14.5 OR Y32.2
ESH&Q RISK LEVEL A-1
OUTSTANDING ECN'S

		DATE
DRWN BY	S. Jarzabkowski	9/08/2014
CHK BY	J. Malley	9/08/2014
ENG APP	S. Buda	9/08/2014
SUPV APP	G. Ganetis	9/10/2014
QA APP	E. Cheswick	9/08/2014
ESH APP	R. Lee	9/10/2014

WIRING DIAGRAM, FRONT END PPS CPU RACK A CHAIN

LT-EL-BL-EI (DRAWING DIRECTORY) | LT-EL-BL-EI-PPS-0101-90 (DRAWING NUMBER) | B (REV.)

COMPUTER REPRODUCIBLE | SCALE: N/A | SHEET 1 OF 5

JOB NUMBER | USED ON DWG. NO.

REV	DESCRIPTION	DATE	BY	CHECKED	APP
	SEE SHEET 1				

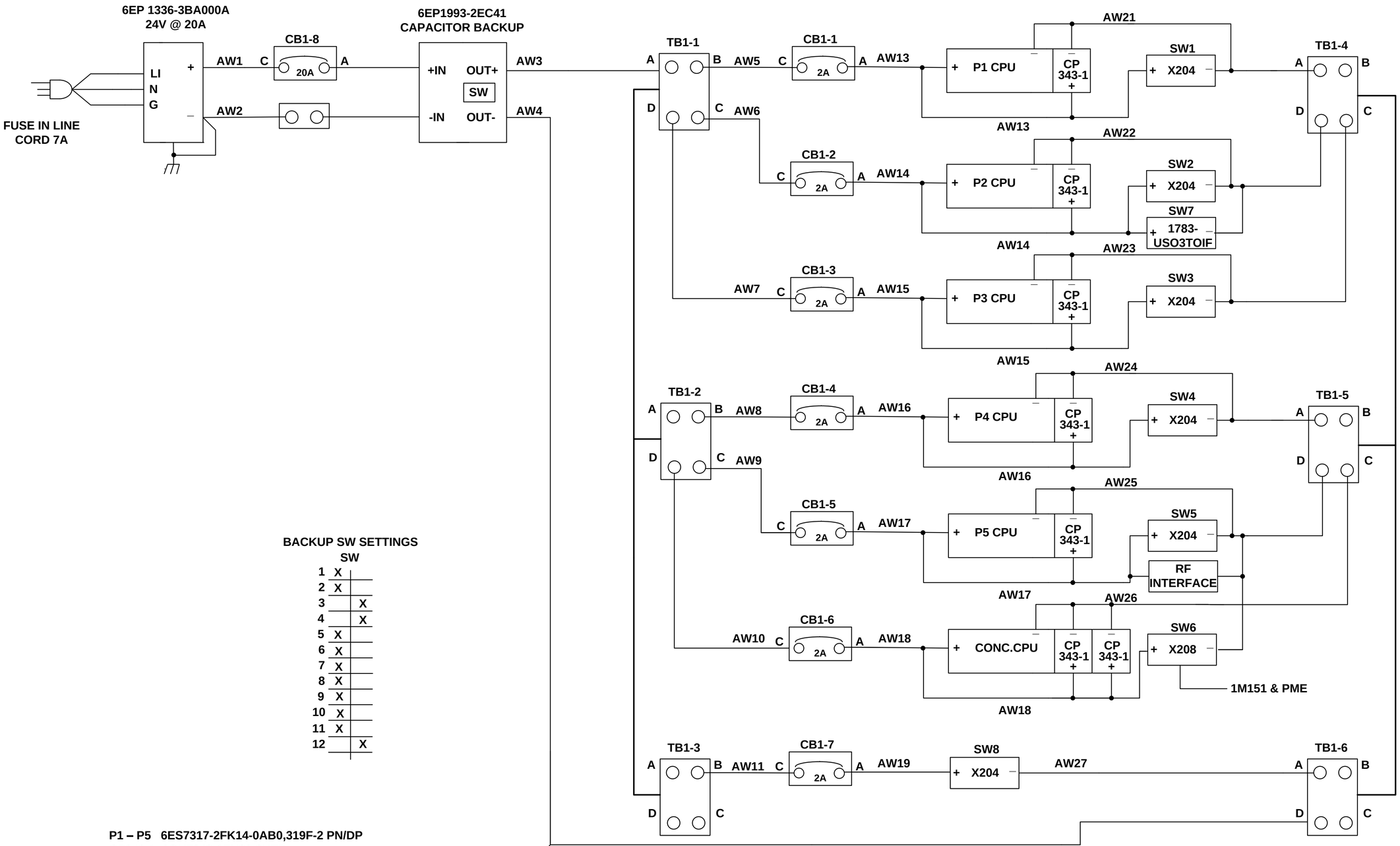

BACKUP SW SETTINGS

	SW	
1	X	
2	X	
3		X
4		X
5	X	
6	X	
7	X	
8	X	
9	X	
10	X	
11	X	
12		X

P1 – P5 6ES7317-2FK14-0AB0,319F-2 PN/DP
CP343-1 6GK7343-1EX30-0XED
SW2 6GK52061-1BB10-2AA3,X206-1
SW1,5 & 8 6GK55204-2BB10-2AA3,X204-2
SW6 6GK5208-OBA10-2AA3,X208
SW7 1783-USO3TOIF

LT-EL-BL-EI-PPS-0101-90

LT-EL-BL-EI (DRAWING DIRECTORY)	LT-EL-BL-EI-PPS-0101-90 (DRAWING NUMBER)	B (REV)
COMPUTER REPRODUCIBLE	SCALE: N/A	SHEET 2 OF 5

REV	DESCRIPTION	BY	DATE	CHK	APP
	SEE SHEET 1				

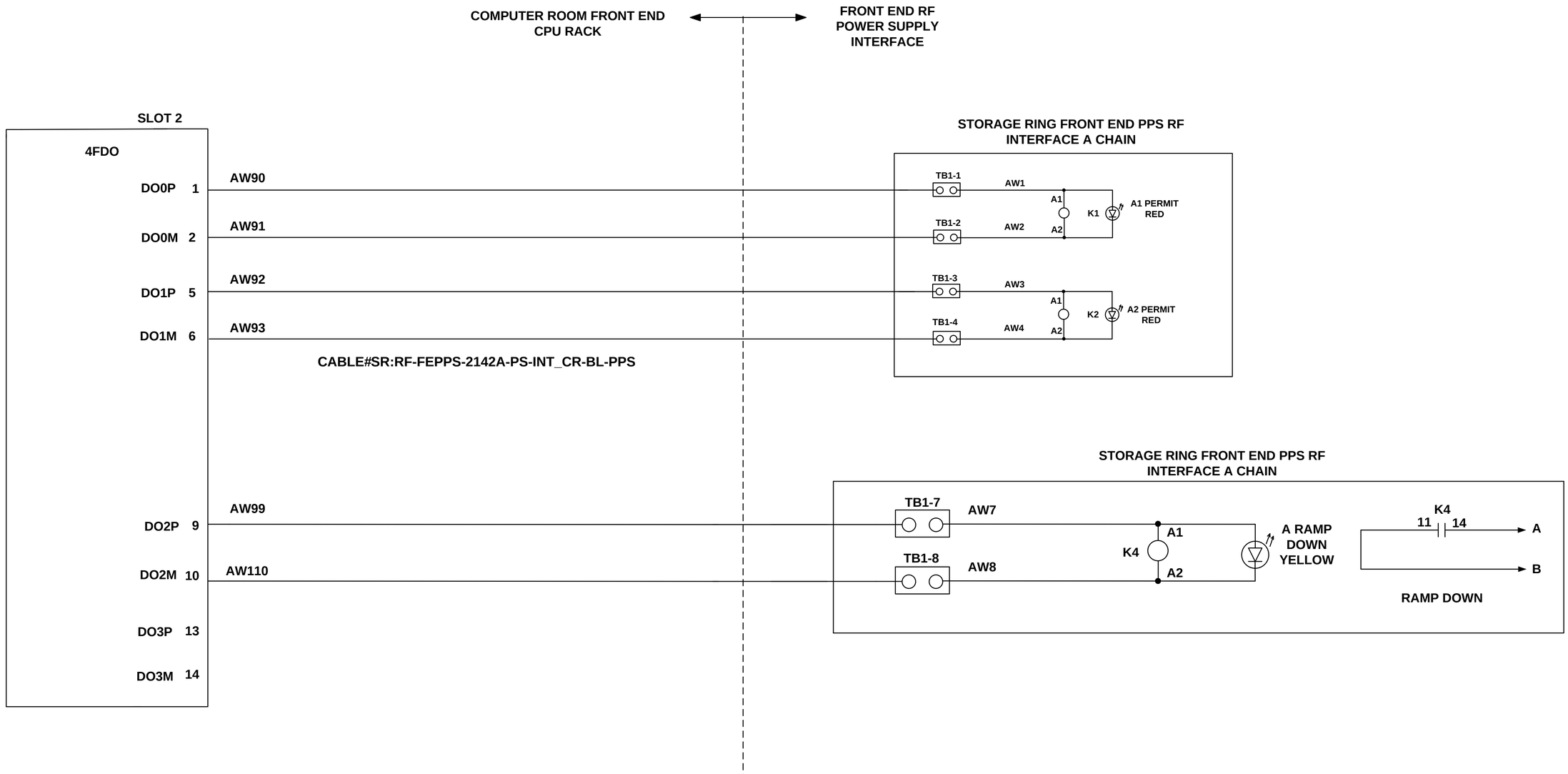

A

LT-EL-BL-EI	LT-EL-BL-EI-PPS-0101-90	B
DRAWING DIRECTORY	DRAWING NUMBER	REV

COMPUTER REPRODUCIBLE | SCALE: N/A | SHEET 3 OF 5

LT-EL-BL-EI-PPS-0101-90

REV	DESCRIPTION	BY	DATE	CHK	APP
	SEE SHEET 1				

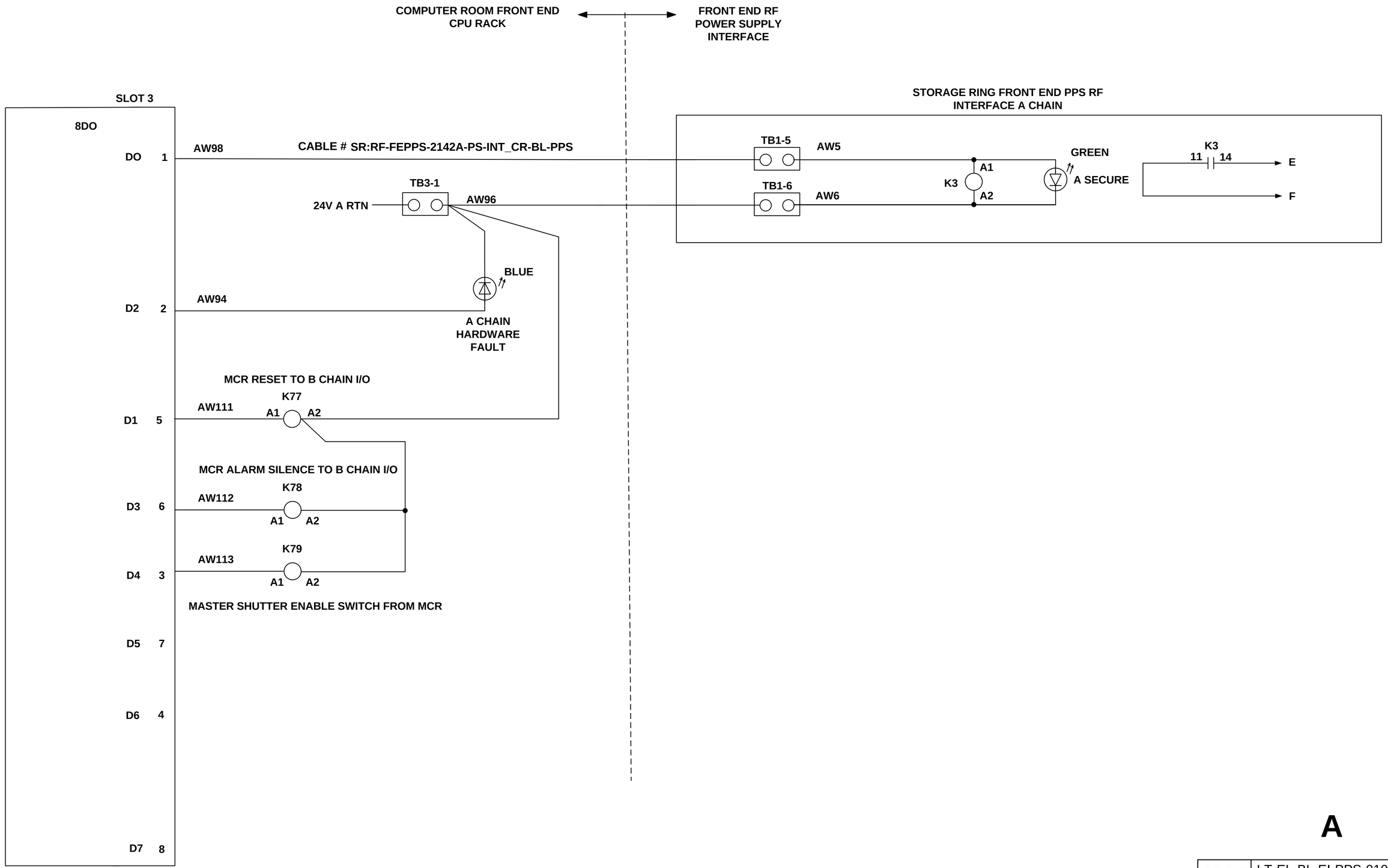

A

LT-EL-BL-EI	LT-EL-BL-EI-PPS-0101-90	B
DRAWING DIRECTORY	DRAWING NUMBER	REV

COMPUTER REPRODUCIBLE | SCALE: N/A | SHEET 4 OF 5

LT-EL-BL-EI-PPS-0101-90

REV	DESCRIPTION	BY	DATE	CHK	APP
	SEE SHEET 1				

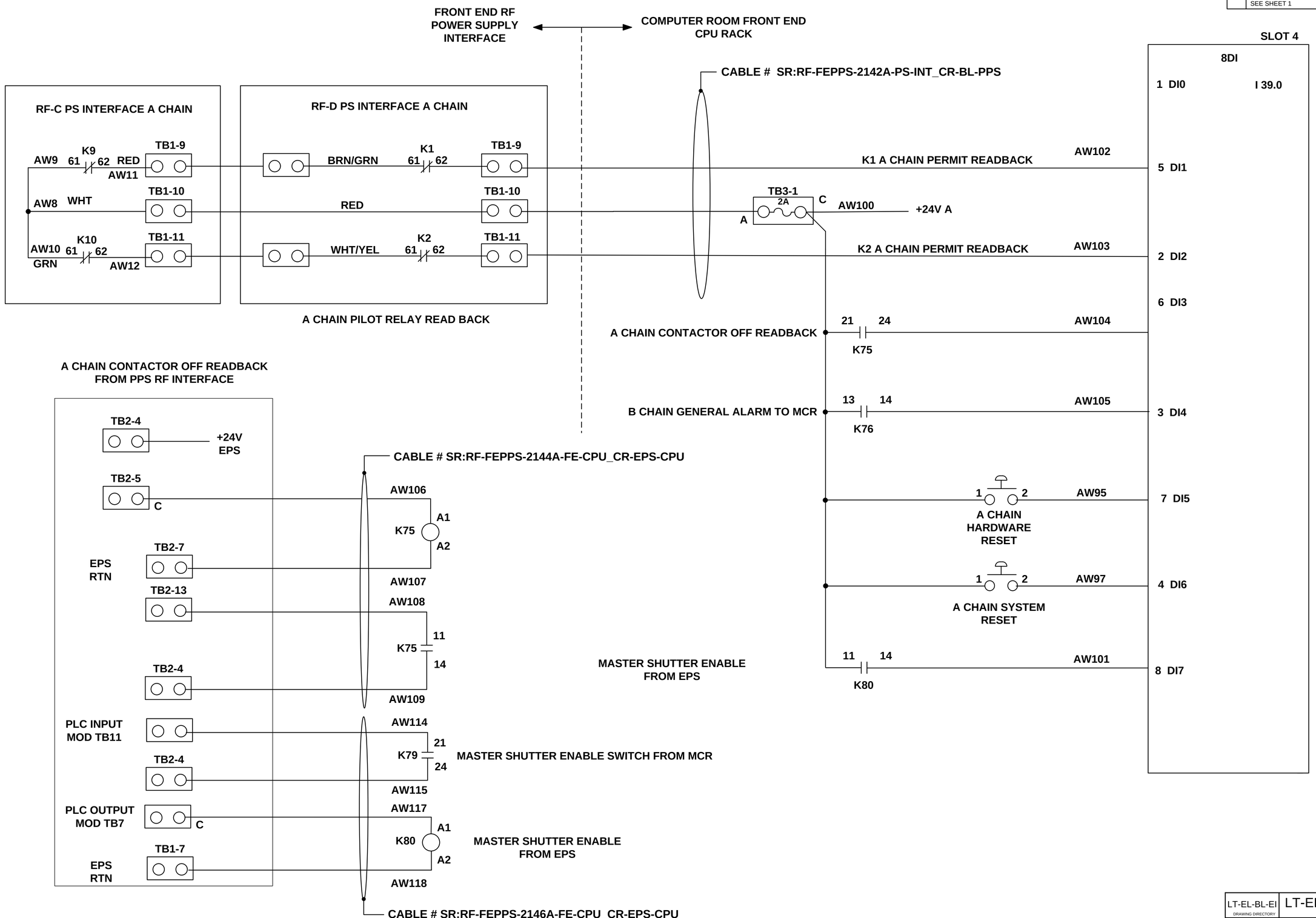

A

LT-EL-BL-EI	LT-EL-BL-EI-PPS-0101-90	B
DRAWING DIRECTORY	DRAWING NUMBER	REV

COMPUTER REPRODUCIBLE | SCALE: N/A | SHEET 5 OF 5

LT-EL-BL-EI-PPS-0101-90

REV	DESCRIPTION	DATE	BY	CHECKED	APP
A	INITIAL RELEASE	9/08/2014	SEJ	JM	SB
B	REVISED PER ECN LT-ECN-016-1605	9/08/2016	SEJ	JM	SB

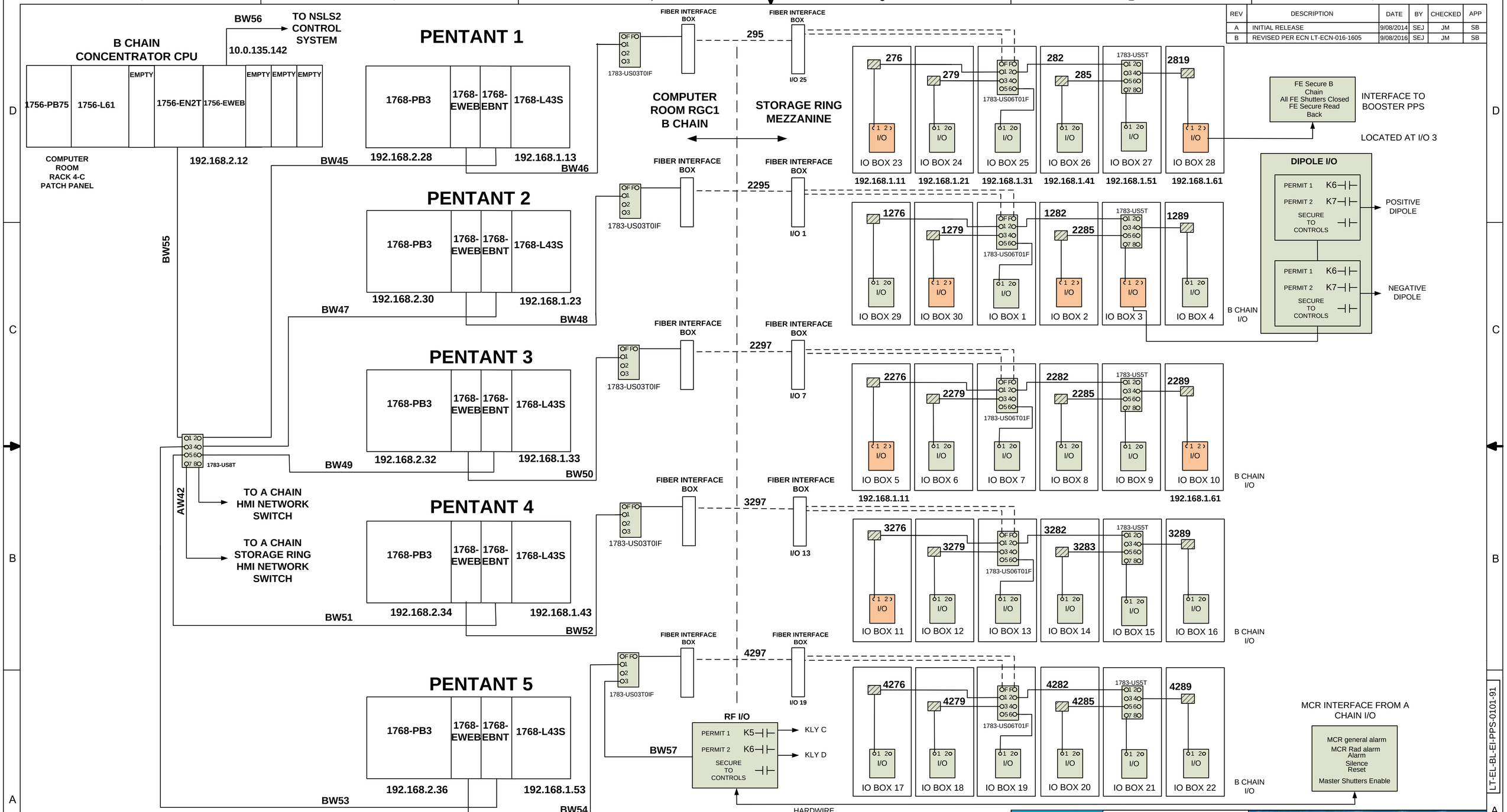

BROOKHAVEN NATIONAL LABORATORY

BROOKHAVEN NATIONAL LABORATORY
BROOKHAVEN SCIENCE ASSOCIATES
UPTON, NEW YORK 11973
Exploring Life's Mysteries, Protecting its Future

NSLS II NATIONAL SYNCHROTRON LIGHT SOURCE II

UNLESS OTHERWISE SPECIFIED
INTEGER TOLERANCES ± .06
DECIMAL TOLERANCES
.X ± .030
.XX ± .015
.XXX ± .010
ANGULAR TOLERANCE ± 0.5°
UNSPECIFIED RADII .02 MAX
125 BREAK SHARP CORNERS AND EDGES
FINISH MAX .03 MIN .005

UNLESS OTHERWISE SPECIFIED DIMENSIONS ARE IN INCHES DIMENSIONS IN [ ] ARE MILLIMETERS EQUIV. FOR REF. ONLY
INTERPRET DRAWING AS PER ANSI Y14.5 OR Y32.2

ESH&Q RISK LEVEL A-1
OUTSTANDING ECN'S

		DATE
DRWN BY	S. Jarzabkowski	9/08/2014
CHK BY	J. Malley	9/08/2014
ENG APP	S. Buda	9/08/2014
SUPV APP	G. Ganetis	9/10/2014
QA APP	E. Cheswick	9/08/2014
ESH APP	R. Lee	9/10/2014

WIRING DIAGRAM, FRONT END PPS CPU RACK B CHAIN

LT-EL-BL-EI (DRAWING DIRECTORY) | LT-EL-BL-EI-PPS-0101-91 (DRAWING NUMBER) | B (REV)

COMPUTER REPRODUCIBLE | SCALE: N/A | SHEET 1 OF 5

JOB NUMBER | USED ON DWG. NO.

LT-EL-BL-EI-PPS-0101-91

REV	DESCRIPTION	DATE	BY	CHECKED	APP
	SEE SHEET 1				

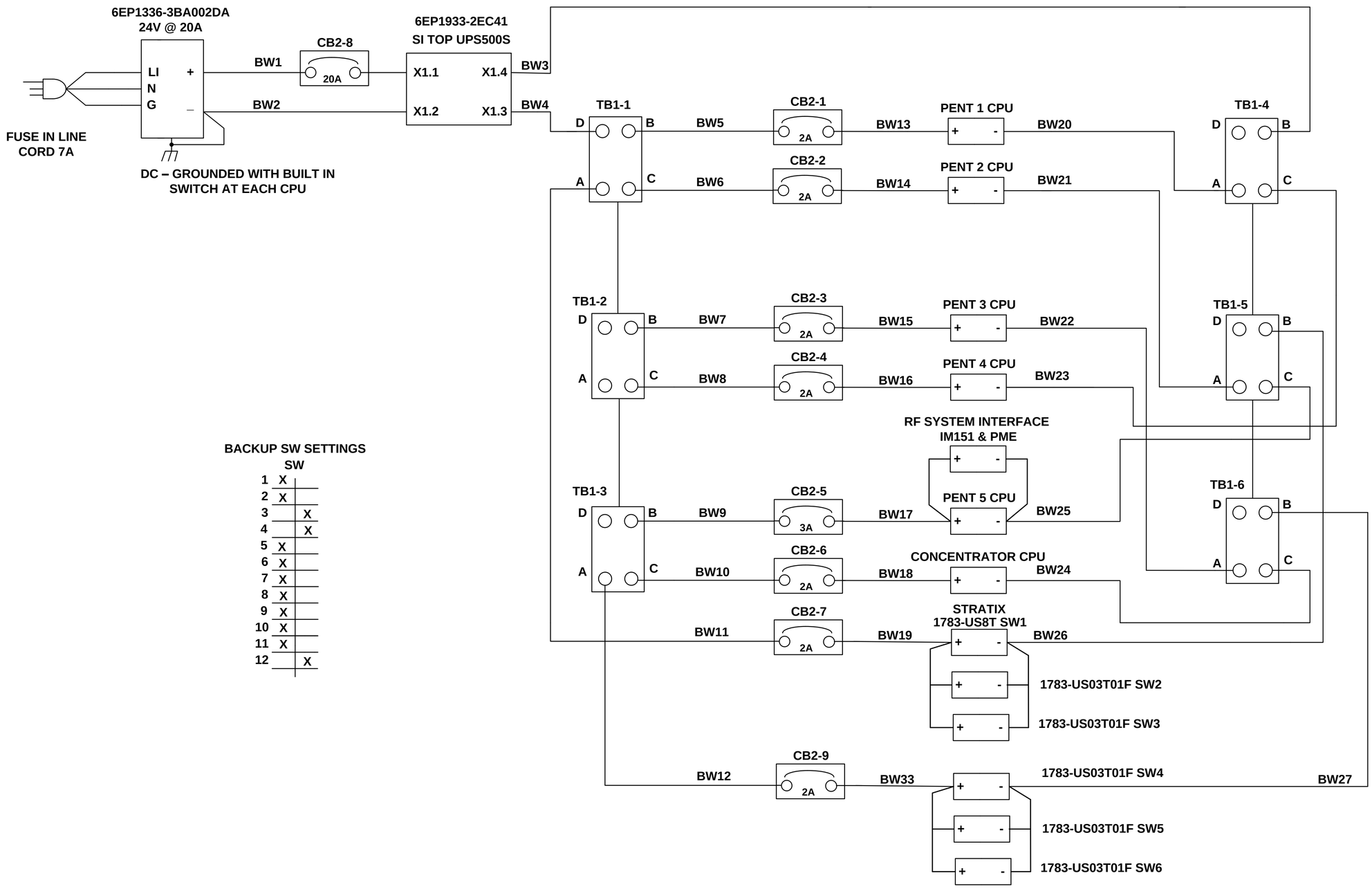

BACKUP SW SETTINGS

	SW	
1	X	
2	X	
3		X
4		X
5	X	
6	X	
7	X	
8	X	
9	X	
10	X	
11	X	
12		X

LT-EL-BL-EI-PPS-0101-91

LT-EL-BL-EI	LT-EL-BL-EI-PPS-0101-91	B
DRAWING DIRECTORY	DRAWING NUMBER	REV
COMPUTER REPRODUCIBLE	SCALE: N/A	SHEET 2 OF 5

REV	DESCRIPTION	BY	DATE	CHK	APP
	SEE SHEET 1				

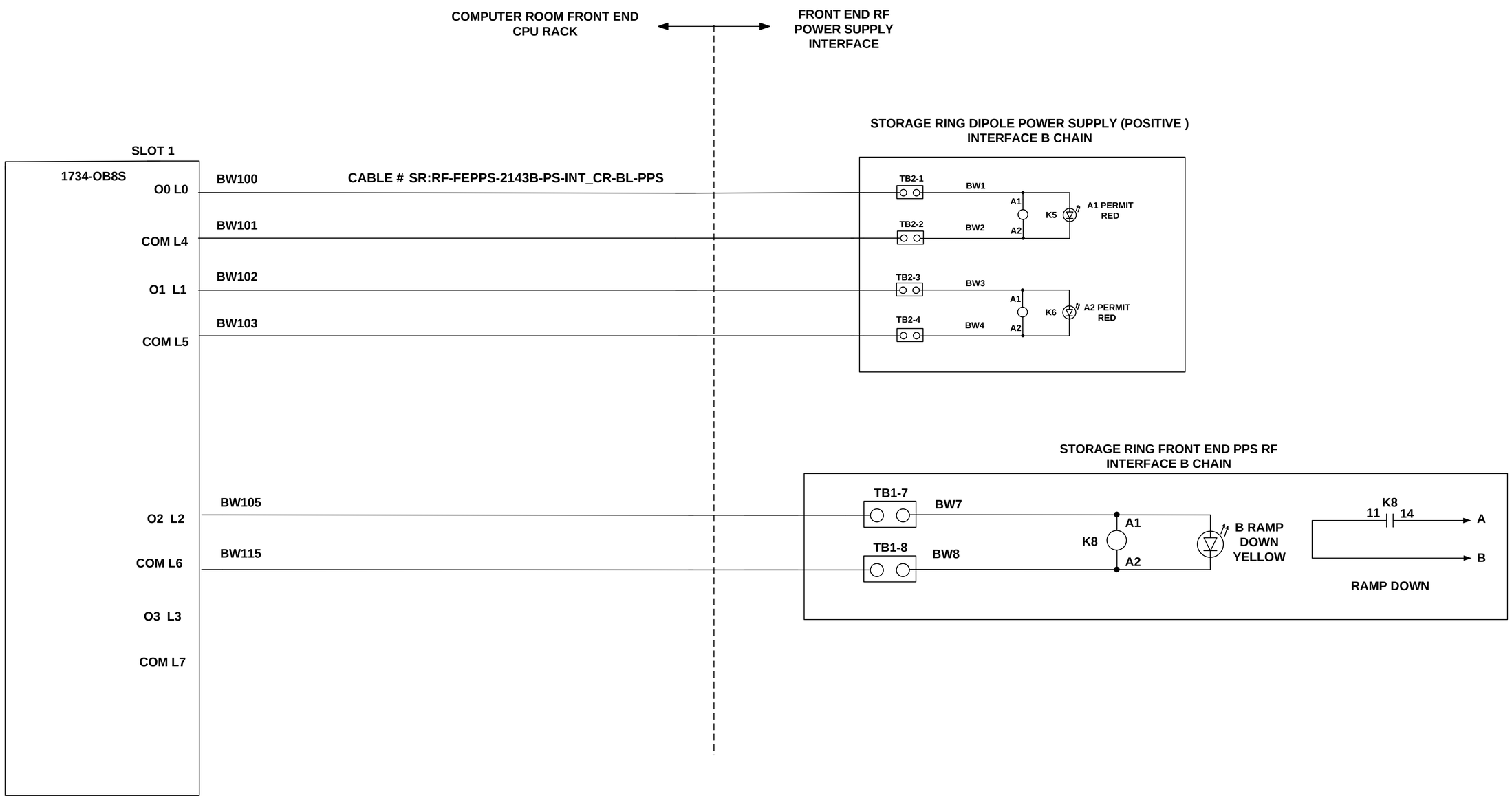

B

LT-EL-BL-EI	LT-EL-BL-EI-PPS-0101-91	B
DRAWING DIRECTORY	DRAWING NUMBER	REV

COMPUTER REPRODUCIBLE | SCALE: N/A | SHEET 3 OF 5

LT-EL-BL-EI-PPS-0101-91

REV	DESCRIPTION	BY	DATE	CHK	APP
	SEE SHEET 1				

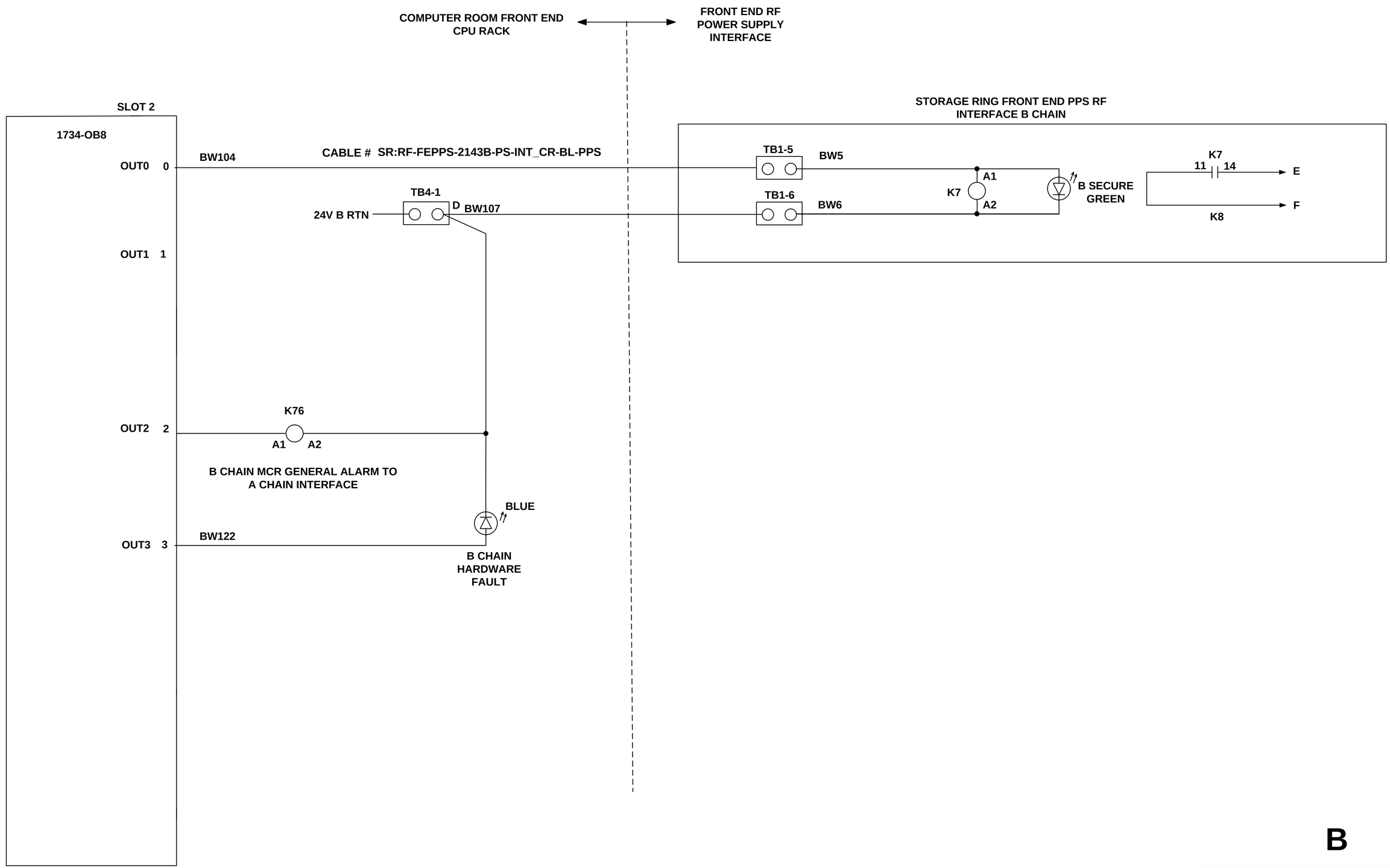

B

LT-EL-BL-EI	LT-EL-BL-EI-PPS-0101-91	B
DRAWING DIRECTORY	DRAWING NUMBER	REV.

COMPUTER REPRODUCIBLE | SCALE: N/A | SHEET 4 OF 5

LT-EL-BL-EI-PPS-0101-91

REV	DESCRIPTION	BY	DATE	CHK	APP
	SEE SHEET 1				

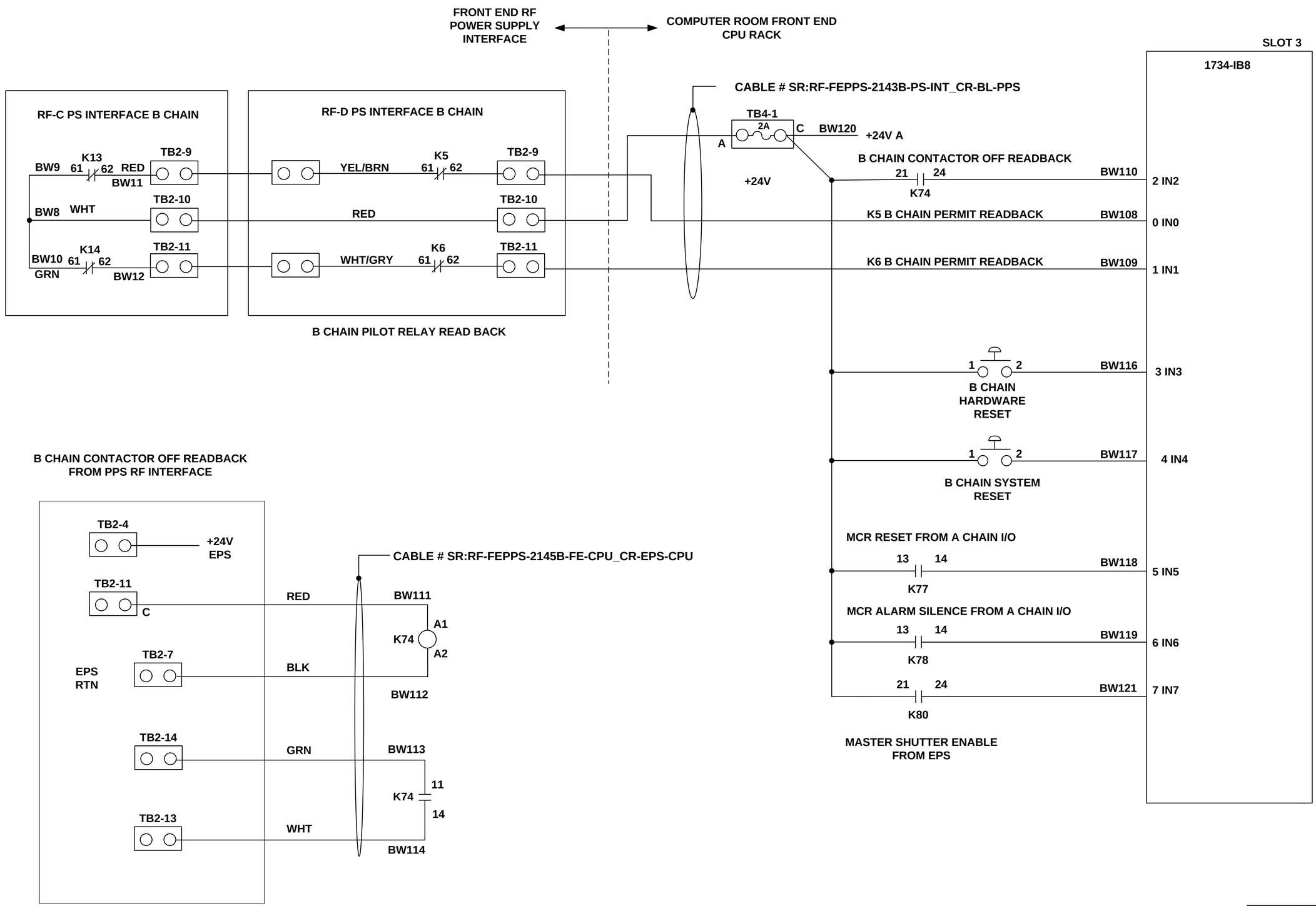

B

LT-EL-BL-EI (DRAWING DIRECTORY)	LT-EL-BL-EI-PPS-0101-91 (DRAWING NUMBER)	B (REV)
COMPUTER REPRODUCIBLE	SCALE: N/A	SHEET 5 OF 5

LT-EL-BL-EI-PPS-0101-91

REV	DESCRIPTION	DATE	BY	CHECKED	APP
A	INITIAL RELEASE	9/08/2014	SEJ	JM	SB
B	REVISED PER ECN LT-ECN-015-1257	7-29-15	CG	JM	SB
C	REVISED PER ECN LT-ECN-016-1373	12/03/2016	SEJ	JM	SB
D	REVISED PER ECN LT-ECN-016-1493	12/03/2016	SEJ	JM	SB
E	REVISED PER ECN LT-ECN-016-1606	9/08/2016	SEJ	JM	SB
F	REVISED PER ECN LT-ECN-017-1728	12/14/2016	SEJ	JM	SB
G	REVISED PER ECN LT-ECN-017-1840	08/29/2017	SEJ	JM	SB

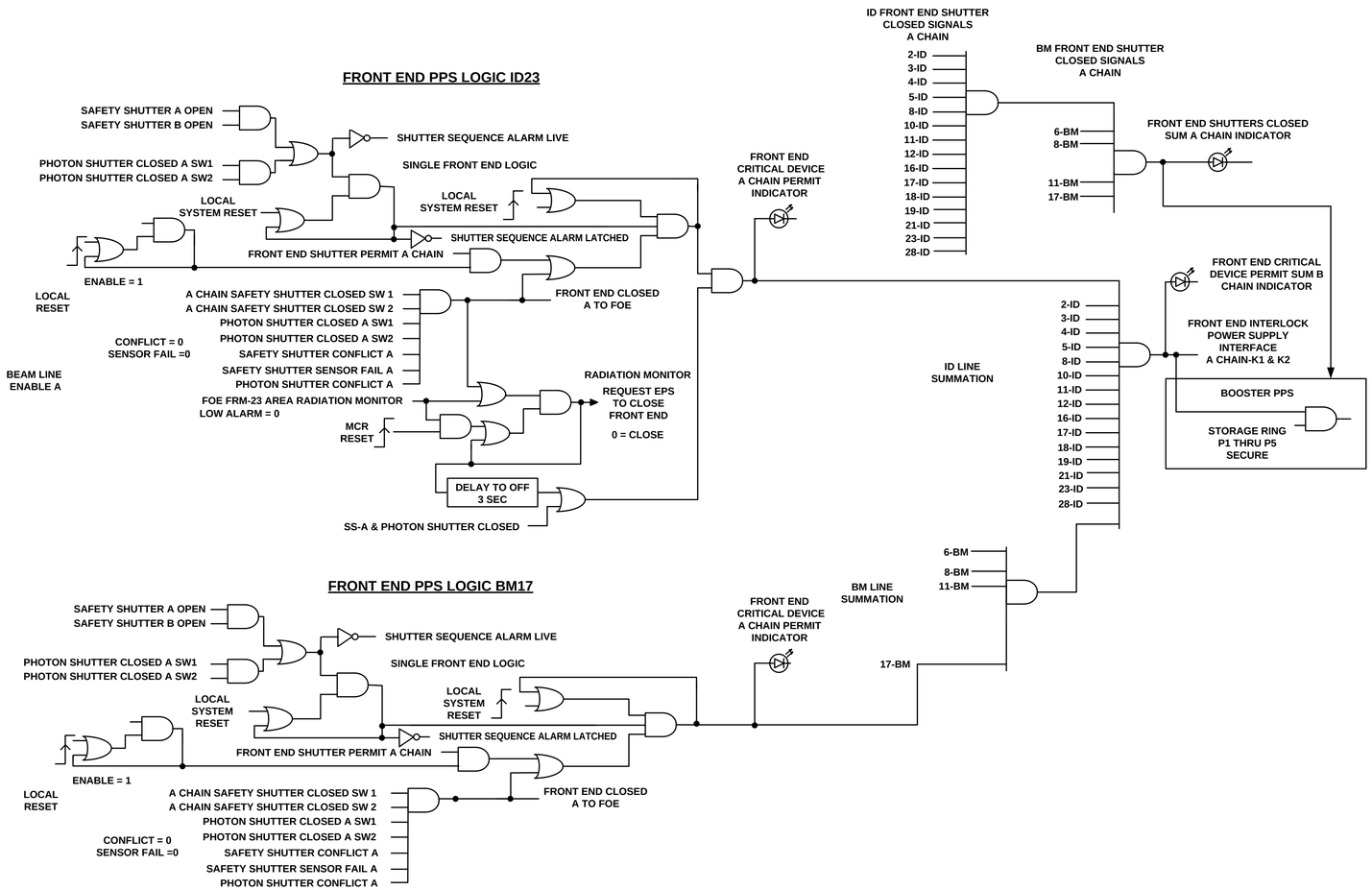

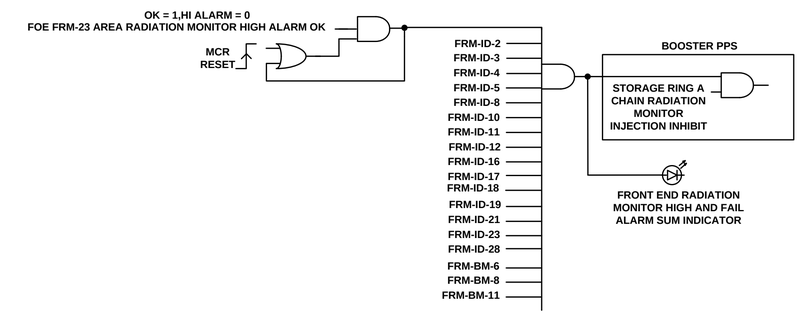

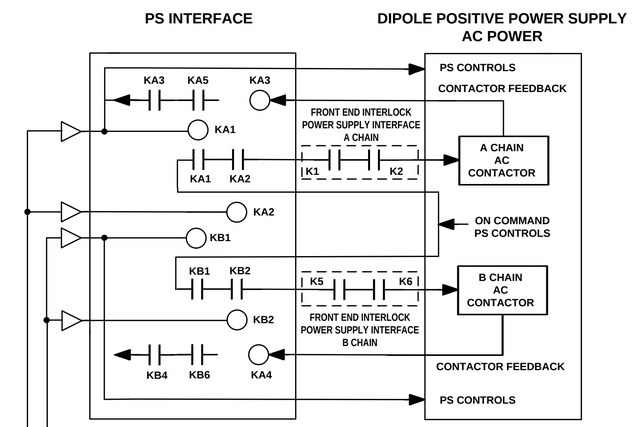

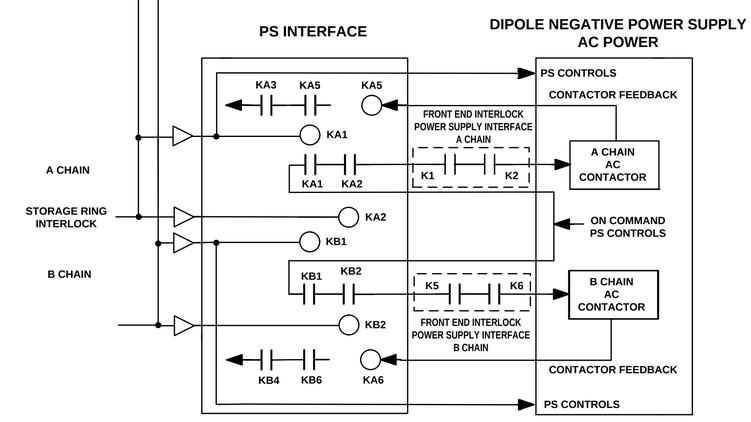

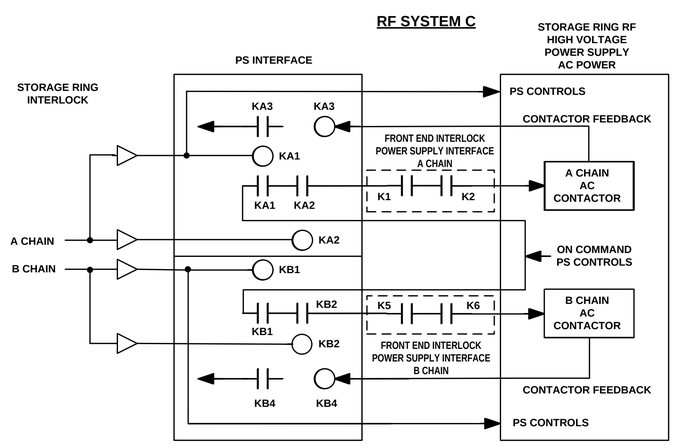

FULL NSLS2 DESIGN HAS UP TO 4 RF SYSTEMS (C SHOWN)

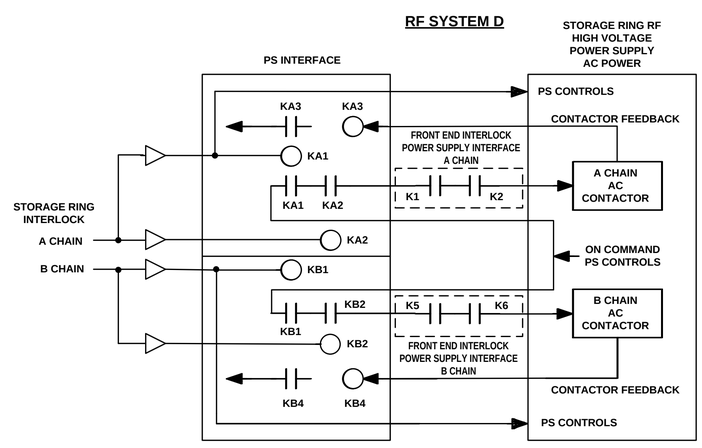

FULL NSLS2 DESIGN HAS UP TO 4 RF SYSTEMS (D SHOWN)

BROOKHAVEN NATIONAL LABORATORY

BROOKHAVEN NATIONAL LABORATORY
BROOKHAVEN SCIENCE ASSOCIATES
UPTON, NEW YORK 11973
Exploring Life's Mysteries, Protecting its Future

NSLSII NATIONAL SYNCHROTRON LIGHT SOURCE II

UNLESS OTHERWISE SPECIFIED
INTEGER TOLERANCES ± .06
DECIMAL TOLERANCES
.X ± .030
.XX ± .015
.XXX ± .010
ANGULAR TOLERANCE ± 0.5°
UNSPECIFIED RADII .02 MAX
125 FINISH — BREAK SHARP CORNERS AND EDGES
MAX .03 MIN .005

UNLESS OTHERWISE SPECIFIED DIMENSIONS ARE IN INCHES
DIMENSIONS IN [ ] ARE MILLIMETERS EQUIV. FOR REF. ONLY

ESH&Q RISK LEVEL A-1

INTERPRET DRAWING AS PER ANSI Y14.5 OR Y32.2

OUTSTANDING ECN'S

		DATE
DRWN BY	S. JARZABKOWSKI	9/08/2014
CHK BY	J. MALLEY	9/08/2014
ENG APP	S. BUDA	9/08/2014
SUPV APP	G. GANETIS	9/10/2014
QA APP	E. CHESWICK	9/08/2014
ESH APP	R. LEE	9/10/2014

WIRING DIAGRAM, FRONT END PPS SYSTEM LOGIC

DRAWING DIRECTORY: LT-EL-BL-EI
DRAWING NUMBER: LT-EL-BL-EI-PPS-0101-92
REV: G

WBS # 1.03.06.01.03
SCALE: N/A
SHEET 1 OF 3

JOB NUMBER
USED ON DWG. NO.

LT-EL-BL-EI-PPS-0101-92

REV	DESCRIPTION	DATE	BY	CHECKED	APP
	SEE SHEET 1				

FRONT END PPS LOGIC ID23

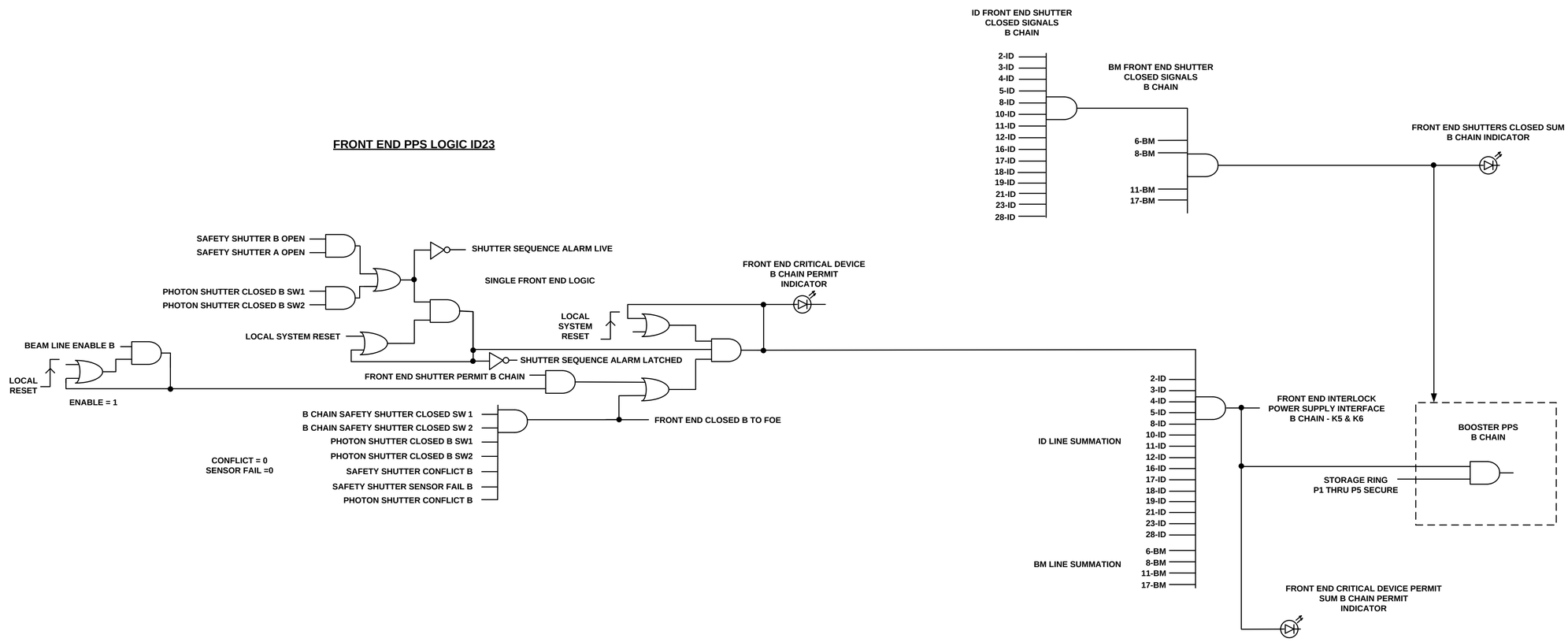

LT-EL-BL-EI	LT-EL-BL-EI-PPS-0101-92	G
DRAWING DIRECTORY	DRAWING NUMBER	REV
COMPUTER REPRODUCIBLE	SCALE: N/A	SHEET 2 OF 3

LT-EL-BL-EI-PPS-0101-92

REV	DESCRIPTION	DATE	BY	CHECKED	APP
	SEE SHEET 1				

A CHAIN

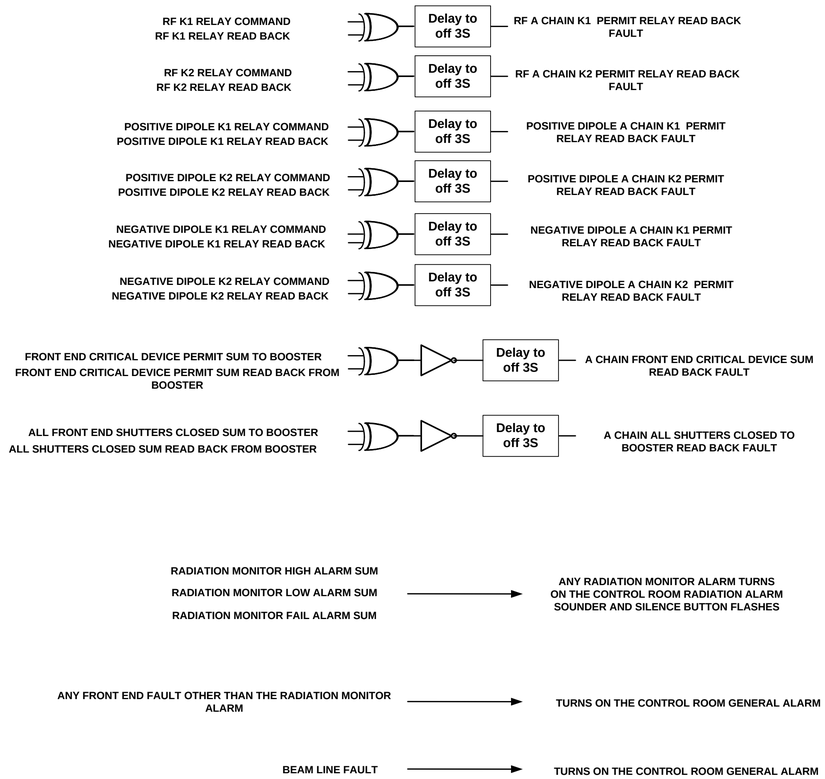

B CHAIN

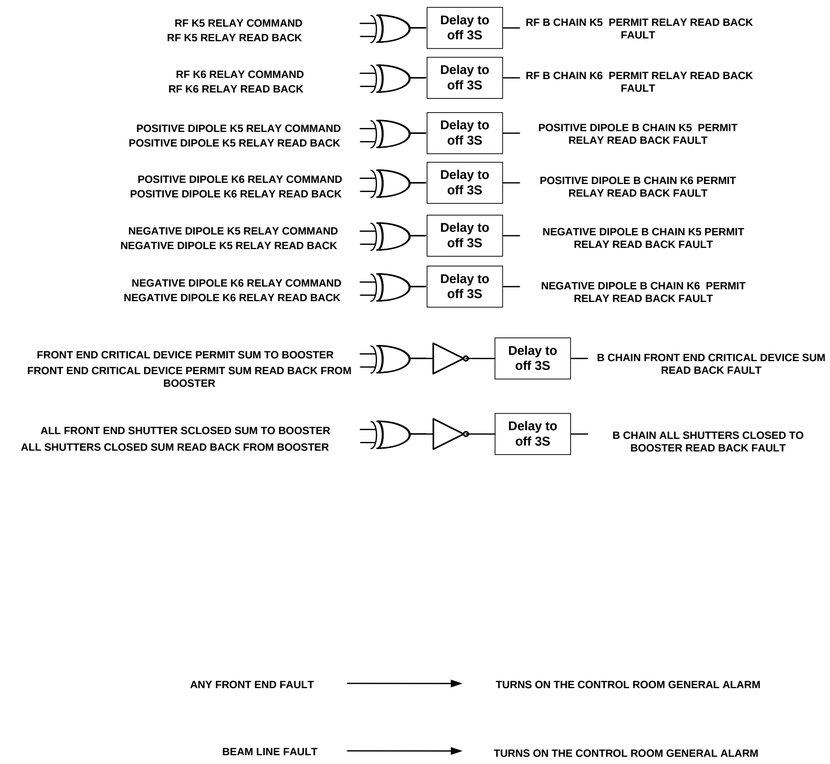

LT-EL-BL-EI-PPS-0101-92

LT-EL-BL-EI (DRAWING DIRECTORY)	LT-EL-BL-EI-PPS-0101-92 (DRAWING NUMBER)	G (REV)
COMPUTER REPRODUCIBLE	SCALE: N/A	SHEET 3 OF 3

FIRMWARE/SOFTWARE/PROGRAMMING LOGIC

DESCRIPTION:

18-ID A CHAIN BEAMLINE PPS PLC PROGRAM

PROGRAM	**SIEMENS STEP 7**	
VERSION	**VERSION 5.5 + SP4**	
DEVICE	**SIEMENS CPU319F-3-PN/DP**	
OPERATING SYSTEM	**WINDOWS**	
PROGRAMMING LANGUAGE	**LADDER LOGIC**	
FILE	**NSLS II Beamline_ID18 REV A**	
SAFETY SIGNATURE	**08C0B39A**	

REV	DESCRIPTION	BY	DATE	CHK	APP
A	INITIAL RELEASE	EO	09/29/17	MP	SB

LT-EL-BL-EI-PPS-1180-70

BROOKHAVEN NATIONAL LABORATORY

BROOKHAVEN NATIONAL LABORATORY
BROOKHAVEN SCIENCE ASSOCIATES
UPTON, NEW YORK 11973
Exploring Life's Mysteries, Protecting its Future

NSLS II
NATIONAL SYNCHROTRON LIGHT SOURCE II

UNLESS OTHERWISE SPECIFIED
INTEGER TOLERANCES
± .06
DECIMAL TOLERANCES
.X ± .030
.XX ± .015
.XXX ± .010
ANGULAR TOLERANCE ± 0.5°
UNSPECIFIED RADII .02 MAX
125 BREAK SHARP CORNERS AND EDGES
FINISH MAX .03 MIN .005

UNLESS OTHERWISE SPECIFIED DIMENSIONS ARE IN INCHES DIMENSIONS IN [*.**] ARE MILLIMETERS EQUIV. FOR REF. ONLY

ESH&Q RISK LEVEL A-1

INTERPRET DRAWING AS PER ANSI Y14.5 OR Y32.2

		DATE	OUTSTANDING ECN'S
DRWN BY	E.ORR	09/29/17	
CHK BY	M.PFEFFER	09/29/17	
ENG APP	S.BUDA	09/29/17	
SUPV APP	G.GANETIS	10/03/17	
QA APP	E.CHESWICK	10/03/17	
ESH APP	B.LEE	10/03/17	

PROGRAMMABLE LOGIC

18-ID A CHAIN BEAMLINE PPS PLC PROGRAM

LT-EL-BL-EI (DRAWING DIRECTORY)	LT-EL-BL-EI-PPS-1180-70 (DRAWING NUMBER)	A (REV)

COMPUTER REPRODUCIBLE | SCALE: N/A | SHEET 1 OF 1

JOB NUMBER	USED ON DWG. NO.

FIRMWARE/SOFTWARE/PROGRAMMING LOGIC

DESCRIPTION:

18-ID B CHAIN BEAMLINE PPS PLC PROGRAM

PROGRAM	**RS LOGIX 5000**	
VERSION	**20.03**	
DEVICE	**ALLEN BRADLEY 1768 L43S SAFETY PLC**	
OPERATING SYSTEM	**WINDOWS**	
PROGRAMMING METHOD	**LADDER**	
FILE	**ID18_B_PLC_20170925.ACD**	

REV	DESCRIPTION	BY	DATE	CHK	APP
A	INITIAL RELEASE	SX	10/02/17	MP	SB

LT-EL-BL-EI-PPS-1180-71

BROOKHAVEN NATIONAL LABORATORY

BROOKHAVEN NATIONAL LABORATORY
BROOKHAVEN SCIENCE ASSOCIATES
UPTON, NEW YORK 11973
Exploring Life's Mysteries, Protecting its Future

NSLS II
NATIONAL SYNCHROTRON LIGHT SOURCE II

UNLESS OTHERWISE SPECIFIED
INTEGER TOLERANCES ± .06
DECIMAL TOLERANCES
.X ± .030
.XX ± .015
.XXX ± .010
ANGULAR TOLERANCE ± 0.5°
UNSPECIFIED RADII .02 MAX
125 BREAK SHARP CORNERS AND EDGES
FINISH MAX .03 MIN .005

UNLESS OTHERWISE SPECIFIED DIMENSIONS ARE IN INCHES DIMENSIONS IN [*.**] ARE MILLIMETERS EQUIV. FOR REF. ONLY

ESH&Q RISK LEVEL A-1

INTERPRET DRAWING AS PER ANSI Y14.5 OR Y32.2

		DATE	OUTSTANDING ECN'S
DRWN BY	S.Xin	10/02/17	
CHK BY	M.PFEFFER	10/02/17	
ENG APP	S.BUDA	10/02/17	
SUPV APP	G.GANETIS	10/03/17	
QA APP	E.CHESWICK	9/29/17	
ESH APP	B.LEE	9/29/16	

PROGRAMMABLE LOGIC
NSLS II B CHAIN BEAMLINE PPS PLC PROGRAM (18-ID)

LT-EL-BL-IN (DRAWING DIRECTORY) | LT-EL-BL-EI-PPS-1180-71 (DRAWING NUMBER) | A (REV)

COMPUTER REPRODUCIBLE | SCALE: N/A | SHEET 1 OF 1

JOB NUMBER | USED ON DWG. NO.

REV	DESCRIPTION	DATE	BY	CHECKED	APP
A	INITIAL RELEASE	10/03/2017	SEJ	JM	SB

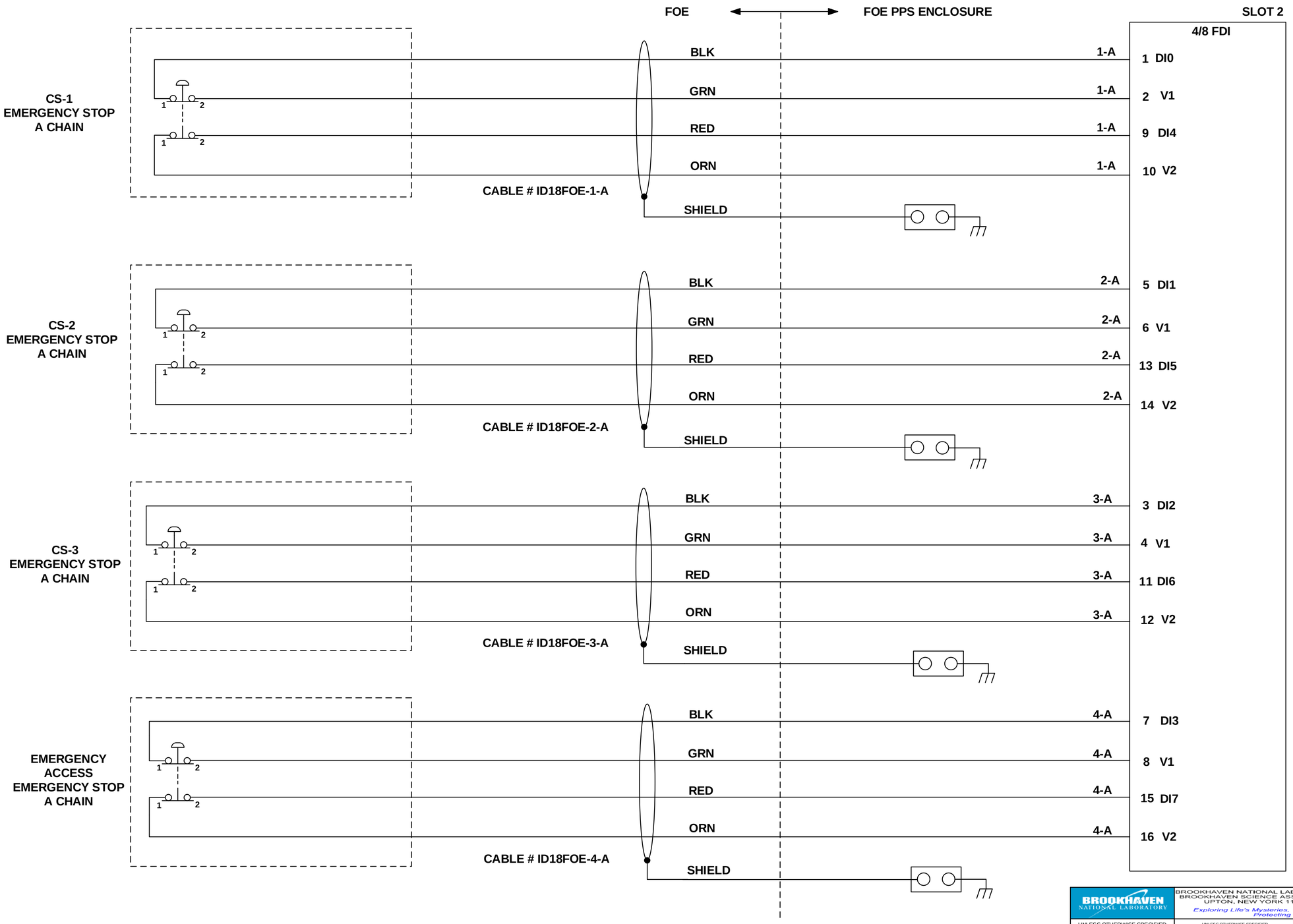

A

LT-EL-BL-EI-PPS-1180-91

BROOKHAVEN NATIONAL LABORATORY

BROOKHAVEN NATIONAL LABORATORY
BROOKHAVEN SCIENCE ASSOCIATES
UPTON, NEW YORK 11973
Exploring Life's Mysteries, Protecting its Future

NSLSII NATIONAL SYNCHROTRON LIGHT SOURCE II

UNLESS OTHERWISE SPECIFIED
INTEGER TOLERANCES ± .06
DECIMAL TOLERANCES
.X ± .030
.XX ± .015
.XXX ± .010
ANGULAR TOLERANCE ± 0.5°
UNSPECIFIED RADII .02 MAX
125 BREAK SHARP CORNERS AND EDGES
FINISH MAX .03 MIN .005

UNLESS OTHERWISE SPECIFIED DIMENSIONS ARE IN INCHES DIMENSIONS IN [; **] ARE MILLIMETERS EQUIV. FOR REF. ONLY

ESH&Q RISK LEVEL A-1

INTERPRET DRAWING AS PER ANSI Y14.5 OR Y32.2

DATE

OUTSTANDING ECN'S

DRWN BY	S. JARZABKOWSKI	10/03/2017
CHK BY	J. MALLEY	10/04/2017
ENG APP	S. BUDA	10/03/2017
SUPV APP	G. GANETIS	10/04/2017
QA APP	E. CHESWICK	10/03/2017
ESH APP	B. LEE	10/04/2017

WIRING DIAGRAM, 18-ID-FOE (FXI-FOE) A CHAIN AND B CHAIN

JOB NUMBER	USED ON DWG. NO.

LT-EL-BL-EI — DRAWING DIRECTORY
LT-EL-BL-EI-PPS-1180-91 — DRAWING NUMBER
A — REV

COMPUTER REPRODUCIBLE

SCALE: N/A

SHEET 1 OF 36

REV	DESCRIPTION	DATE	BY	CHECKED	APP
	SEE SHEET 1				

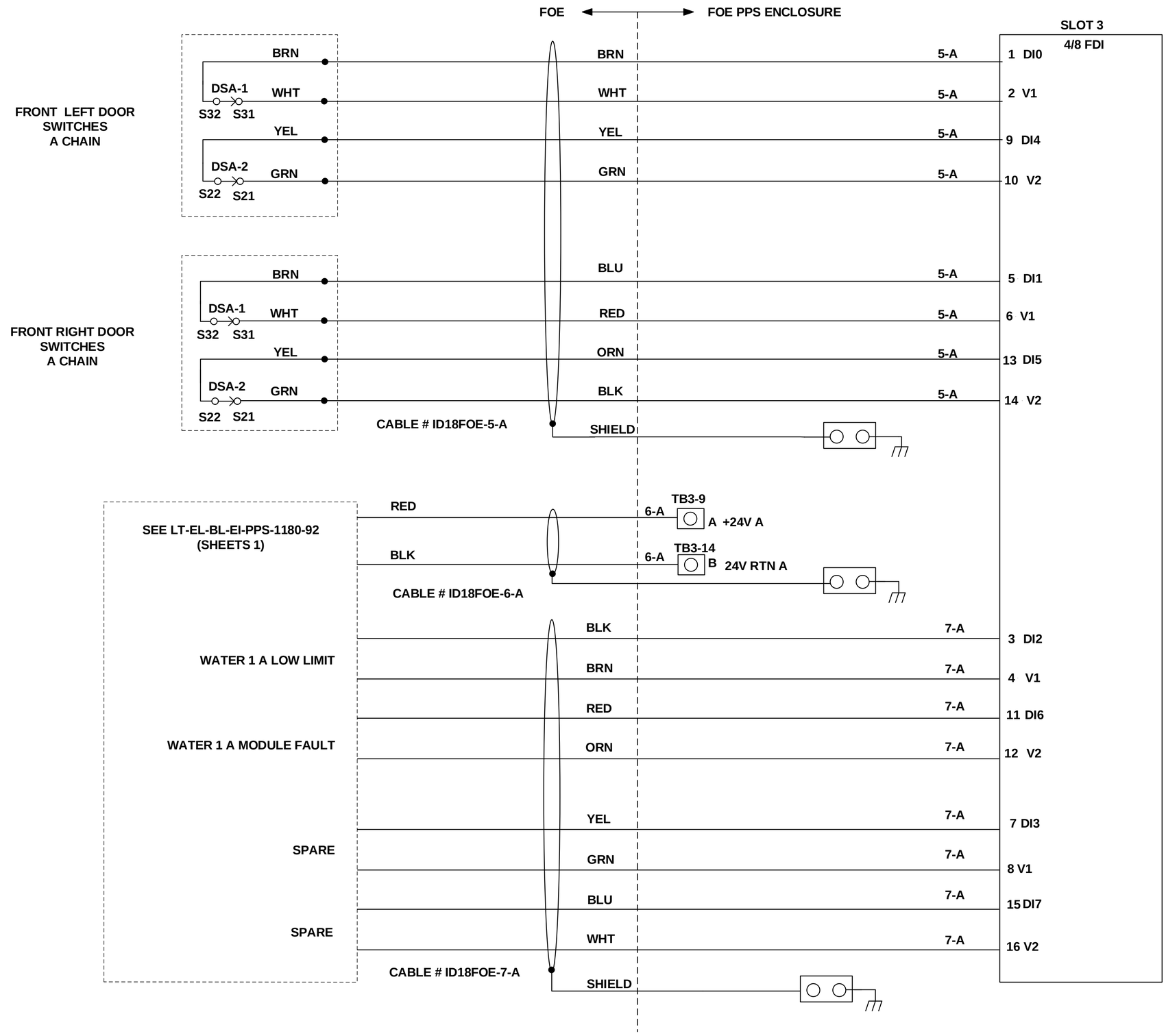

A

LT-EL-BL-EI (DRAWING DIRECTORY)	LT-EL-BL-EI-PPS-1180-91 (DRAWING NUMBER)	A (REV)
COMPUTER REPRODUCIBLE	SCALE: N/A	SHEET 2 OF 36

LT-EL-BL-EI-PPS-1180-91

REV	DESCRIPTION	DATE	BY	CHECKED	APP
	SEE SHEET 1				

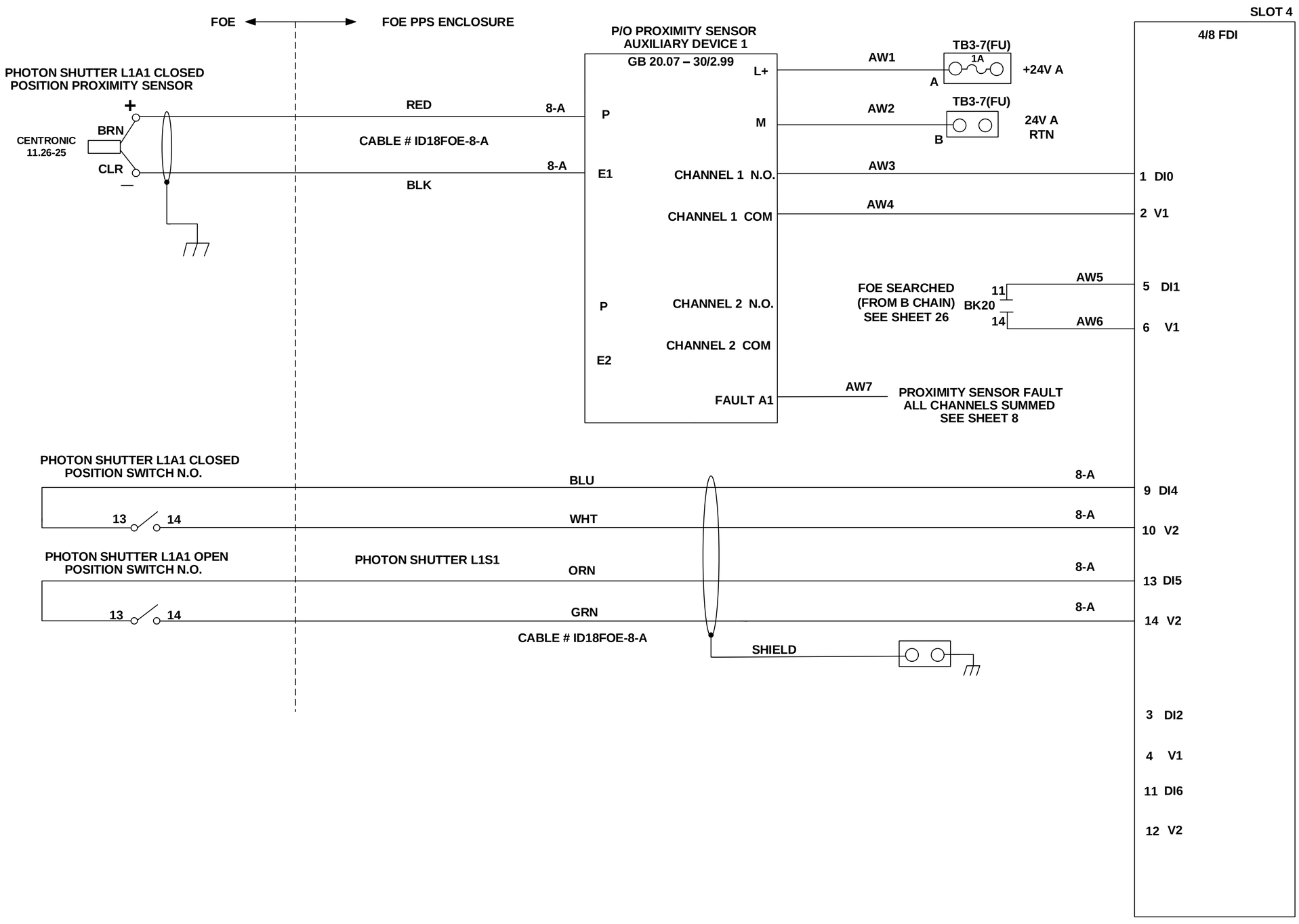

A

LT-EL-BL-EI	LT-EL-BL-EI-PPS-1180-91	A
DRAWING DIRECTORY	DRAWING NUMBER	REV

COMPUTER REPRODUCIBLE | SCALE: N/A | SHEET 3 OF 36

LT-EL-BL-EI-PPS-1180-91

REV	DESCRIPTION	DATE	BY	CHECKED	APP
	SEE SHEET 1				

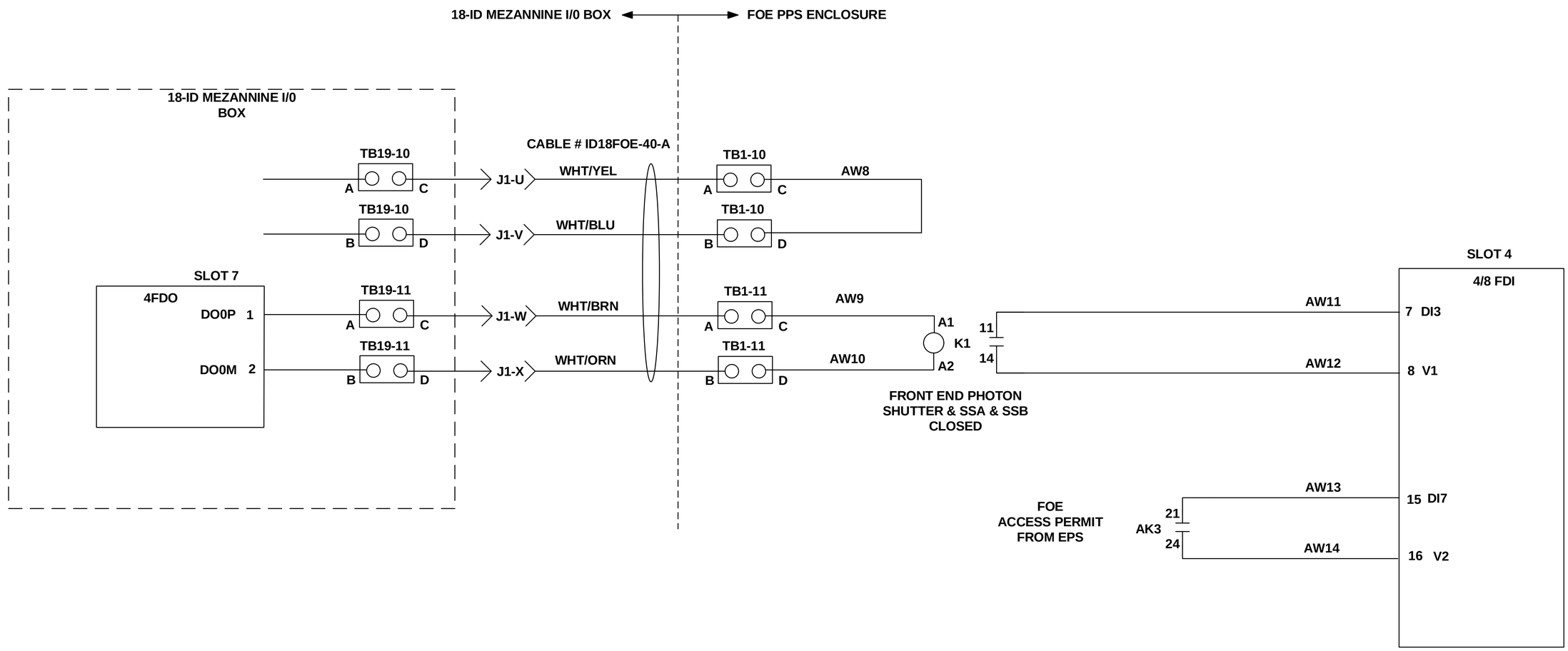

A

LT-EL-BL-EI	LT-EL-BL-EI-PPS-1180-91	A
DRAWING DIRECTORY	DRAWING NUMBER	REV

COMPUTER REPRODUCIBLE | SCALE: N/A | SHEET 4 OF 36

LT-EL-BL-EI-PPS-1180-91

REV	DESCRIPTION	DATE	BY	CHECKED	APP
	SEE SHEET 1				

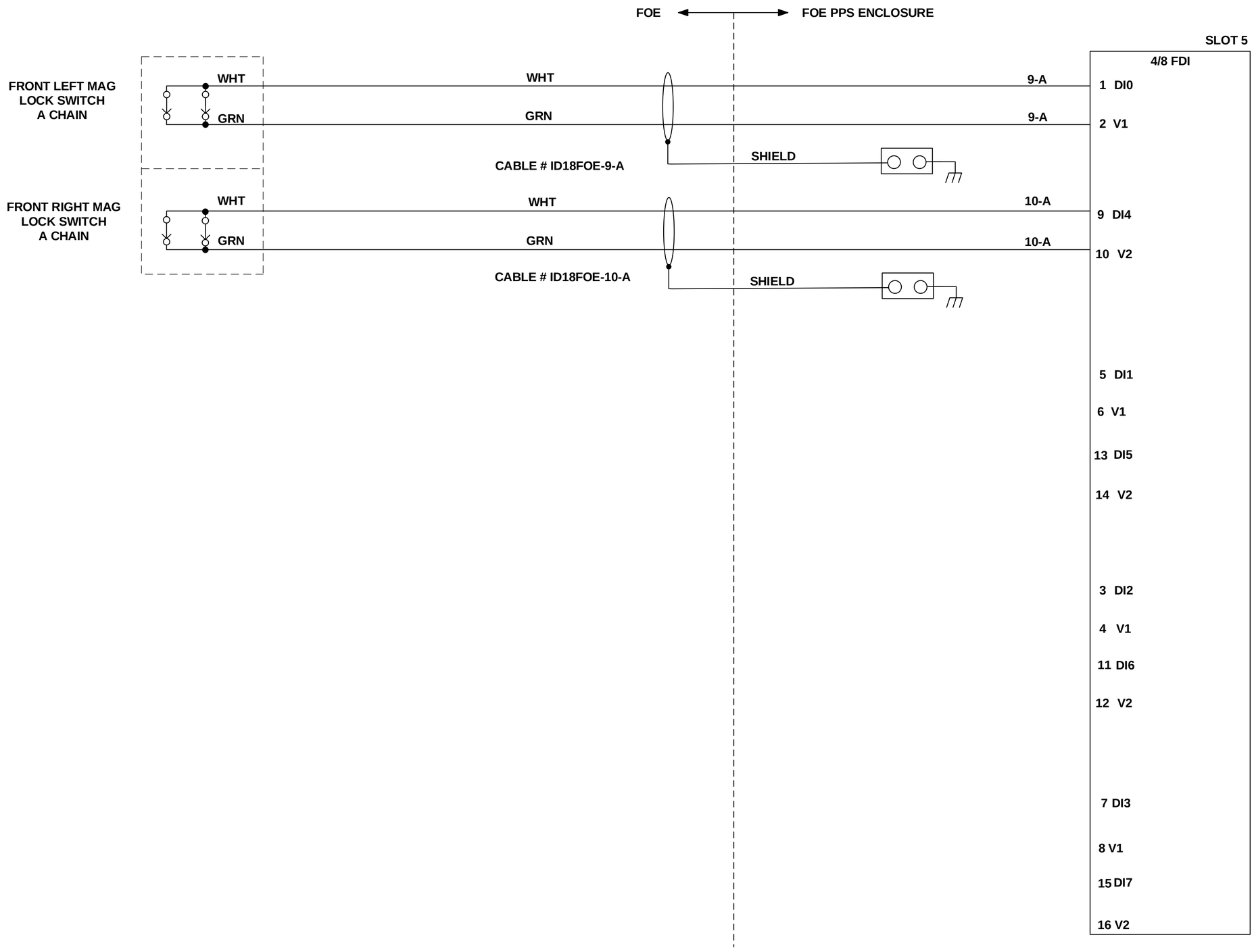

A

LT-EL-BL-EI	LT-EL-BL-EI-PPS-1180-91	A
DRAWING DIRECTORY	DRAWING NUMBER	REV

COMPUTER REPRODUCIBLE | SCALE: N/A | SHEET 5 OF 36

LT-EL-BL-EI-PPS-1180-91

REV	DESCRIPTION	DATE	BY	CHECKED	APP
	SEE SHEET 1				

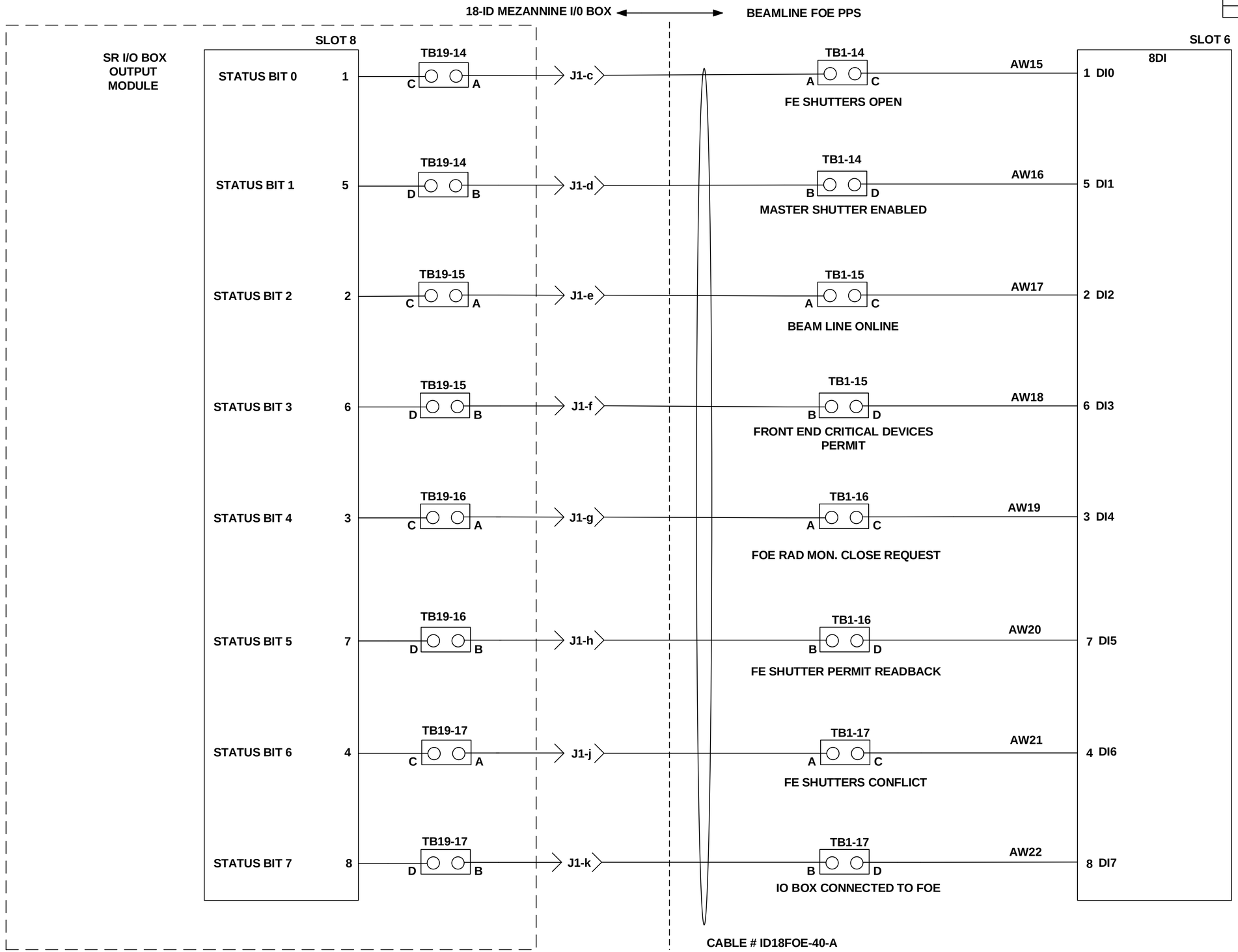

A

LT-EL-BL-EI (DRAWING DIRECTORY)	LT-EL-BL-EI-PPS-1180-91 (DRAWING NUMBER)	A (REV)
COMPUTER REPRODUCIBLE	SCALE: N/A	SHEET 6 OF 36

LT-EL-BL-EI-PPS-1180-91

REV	DESCRIPTION	DATE	BY	CHECKED	APP
	SEE SHEET 1				

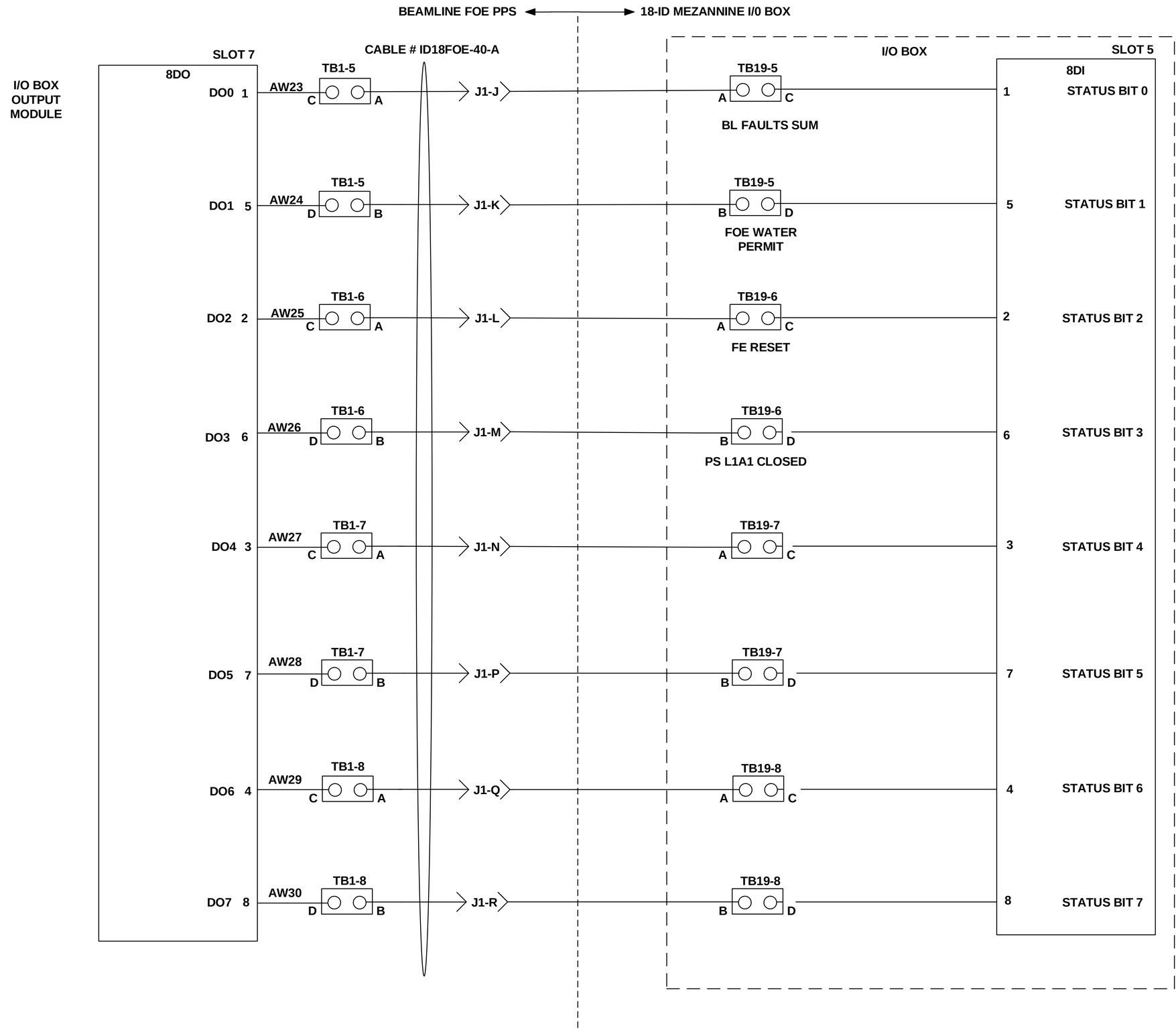

A

LT-EL-BL-EI	LT-EL-BL-EI-PPS-1180-91	A
DRAWING DIRECTORY	DRAWING NUMBER	REV

COMPUTER REPRODUCIBLE | SCALE: N/A | SHEET 7 OF 36

LT-EL-BL-EI-PPS-1180-91

REV	DESCRIPTION	DATE	BY	CHECKED	APP
	SEE SHEET 1				

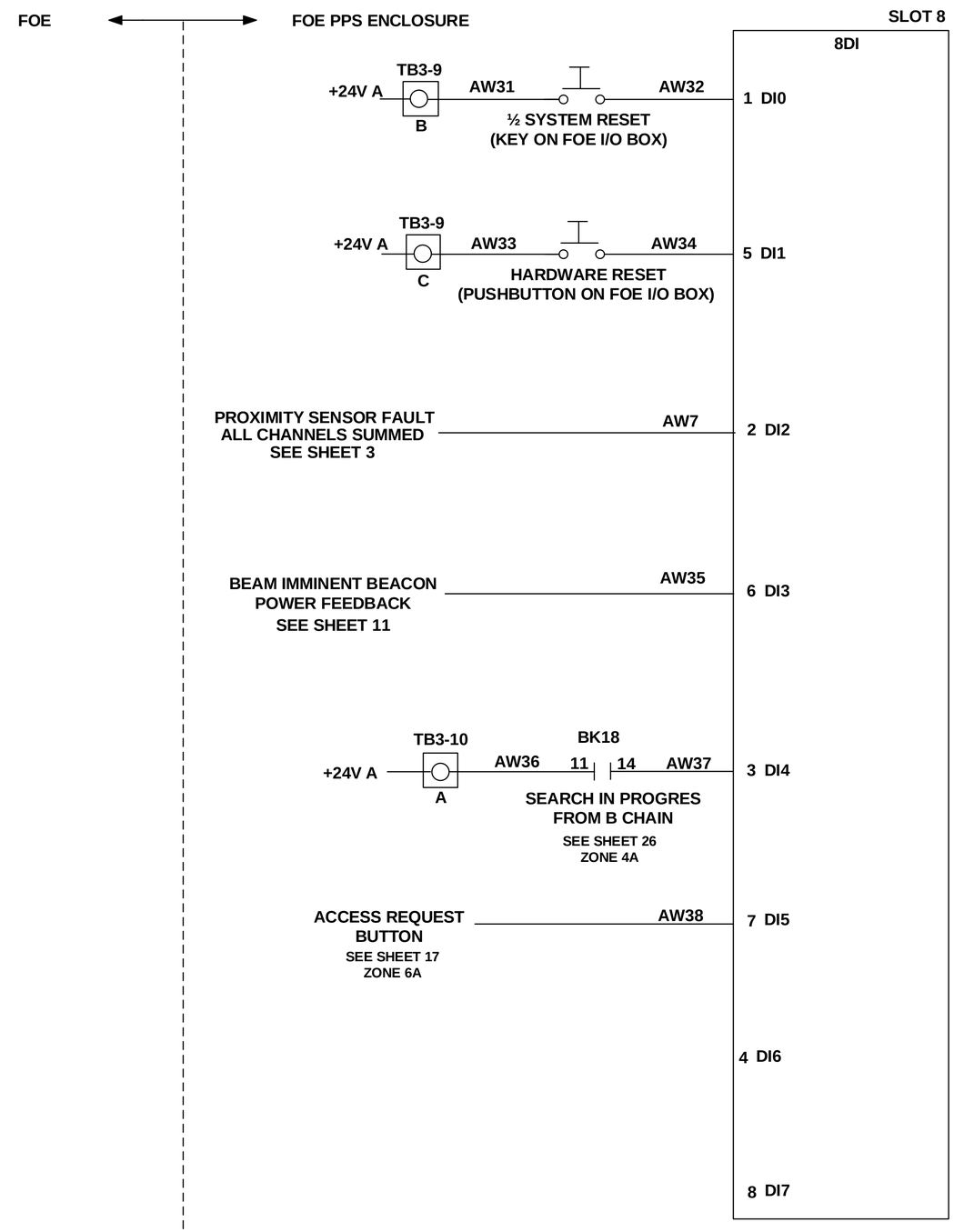

A

LT-EL-BL-EI	LT-EL-BL-EI-PPS-1180-91	A
DRAWING DIRECTORY	DRAWING NUMBER	REV
COMPUTER REPRODUCIBLE	SCALE: N/A	SHEET 8 OF 36

LT-EL-BL-EI-PPS-1180-91

REV	DESCRIPTION	DATE	BY	CHECKED	APP
	SEE SHEET 1				

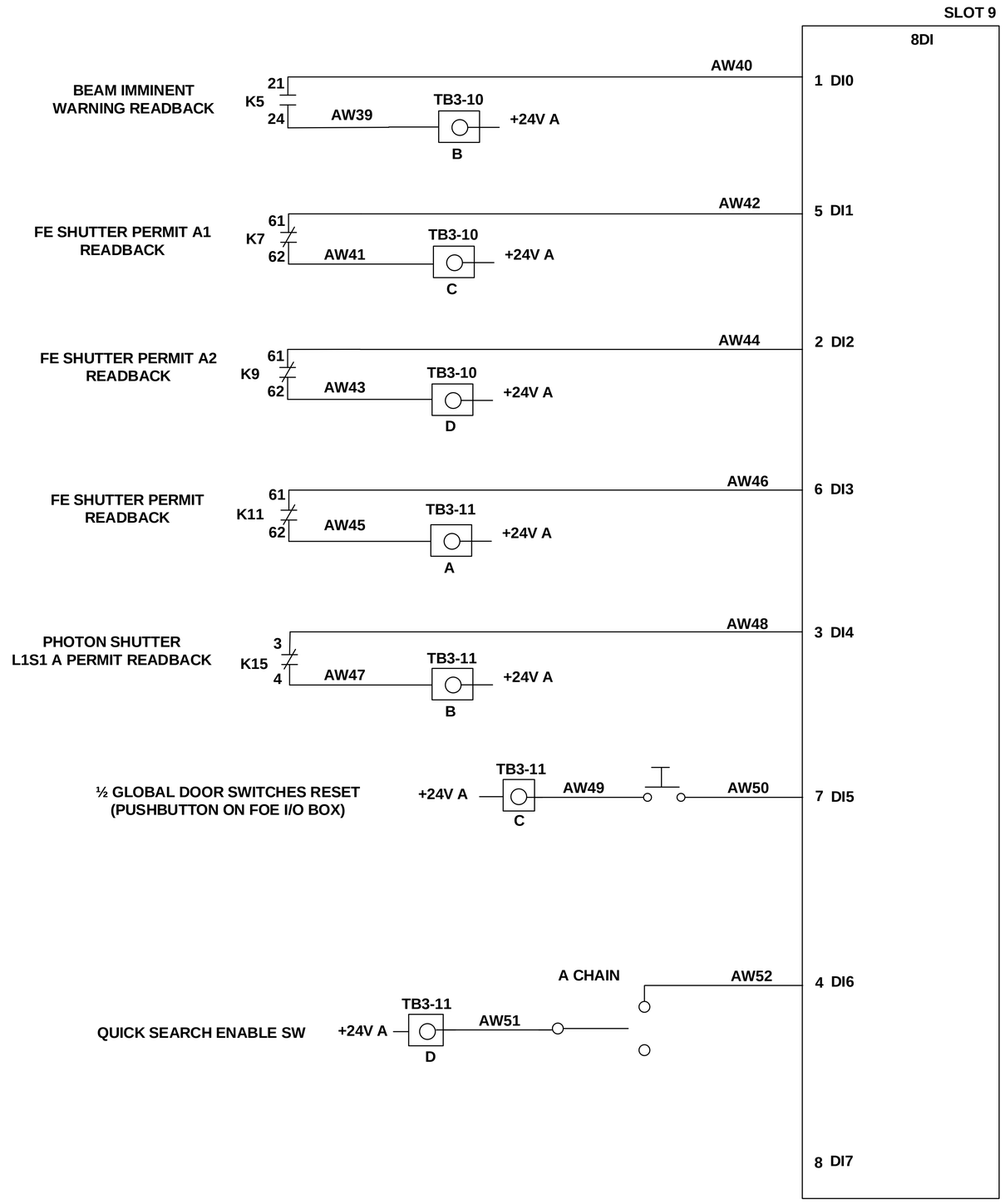

A

LT-EL-BL-EI (DRAWING DIRECTORY)	LT-EL-BL-EI-PPS-1180-91 (DRAWING NUMBER)	A (REV)
COMPUTER REPRODUCIBLE	SCALE: N/A	SHEET 9 OF 36

LT-EL-BL-EI-PPS-1180-91

REV	DESCRIPTION	DATE	BY	CHECKED	APP
	SEE SHEET 1				

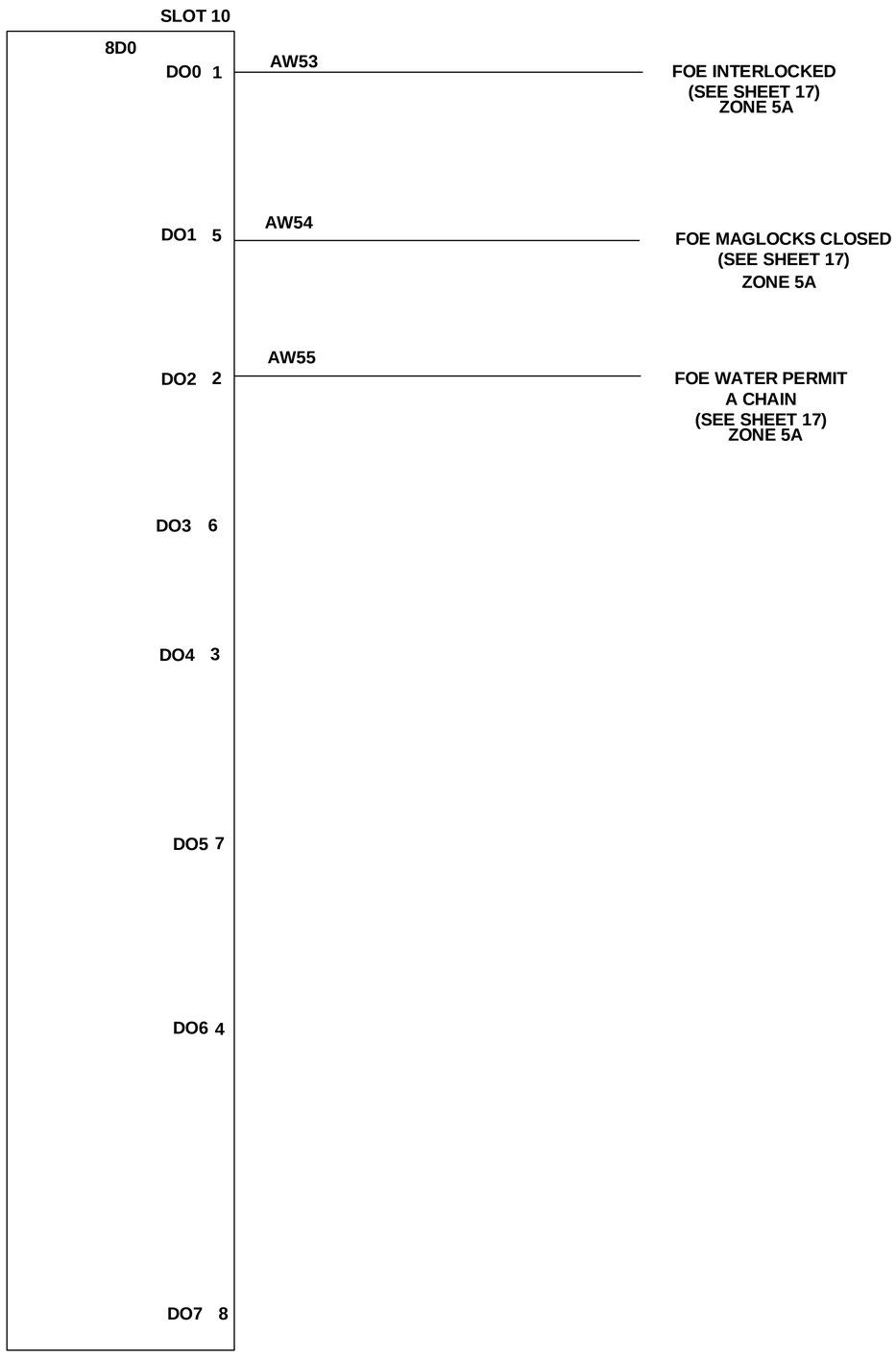

A

LT-EL-BL-EI	LT-EL-BL-EI-PPS-1180-91	A
DRAWING DIRECTORY	DRAWING NUMBER	REV

COMPUTER REPRODUCIBLE | SCALE: N/A | SHEET 10 OF 36

LT-EL-BL-EI-PPS-1180-91

REV	DESCRIPTION	DATE	BY	CHECKED	APP
	SEE SHEET 1				

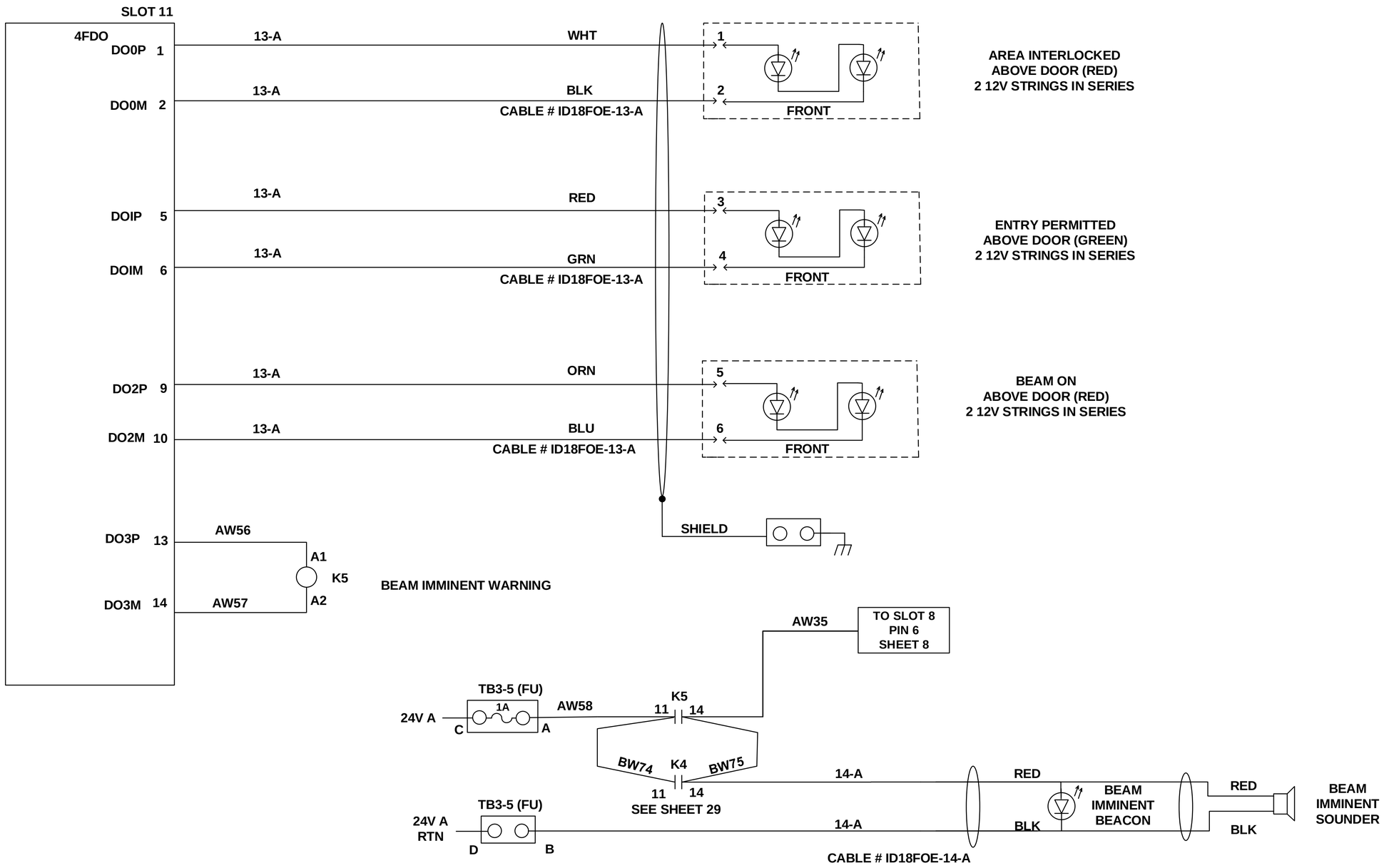

A

LT-EL-BL-EI	LT-EL-BL-EI-PPS-1180-91	A
DRAWING DIRECTORY	DRAWING NUMBER	REV

COMPUTER REPRODUCIBLE | SCALE: N/A | SHEET 11 OF 36

LT-EL-BL-EI-PPS-1180-91

REV	DESCRIPTION	DATE	BY	CHECKED	APP
	SEE SHEET 1				

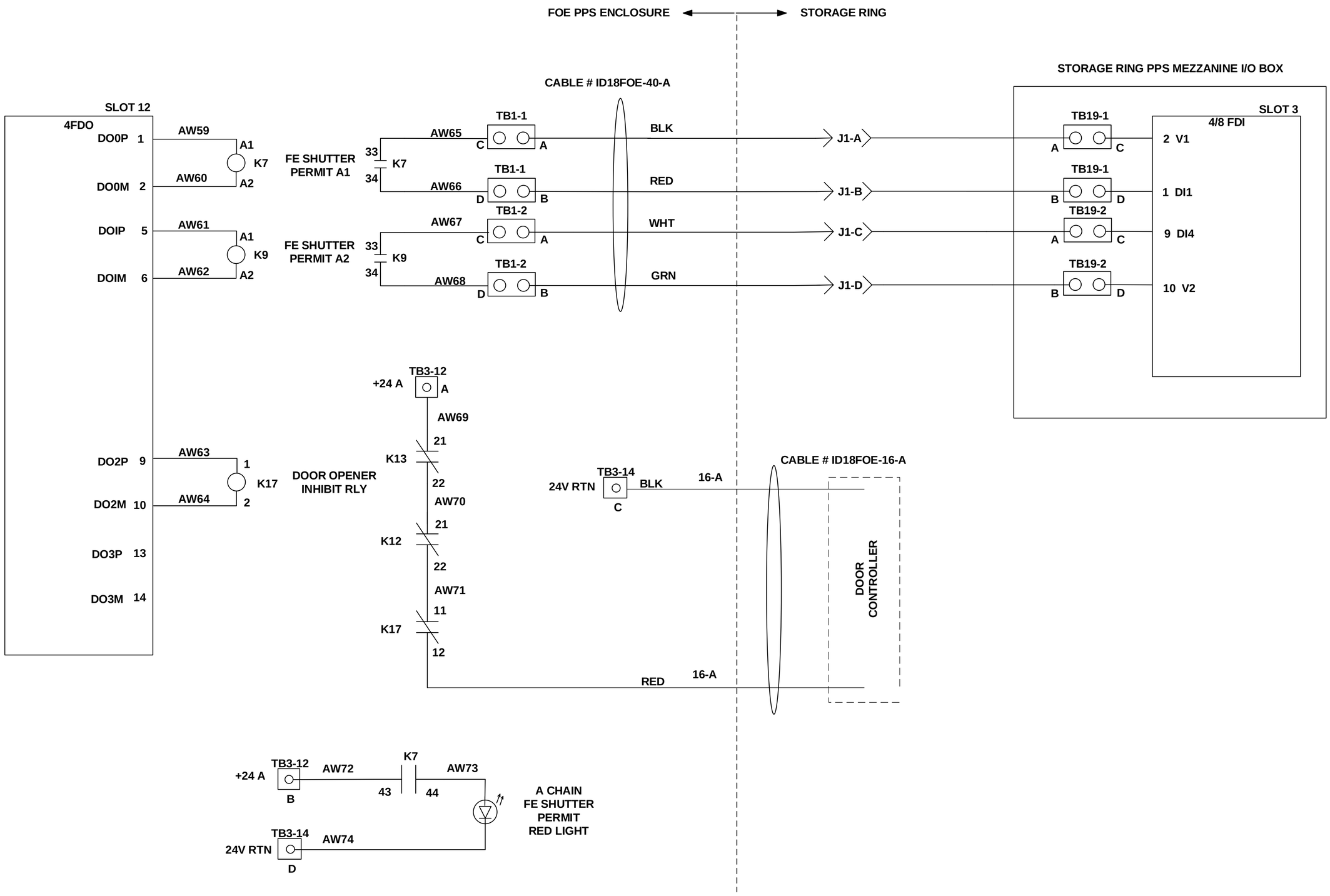

A

LT-EL-BL-EI DRAWING DIRECTORY	LT-EL-BL-EI-PPS-1180-91 DRAWING NUMBER	A REV
COMPUTER REPRODUCIBLE	SCALE: N/A	SHEET 12 OF 36

LT-EL-BL-EI-PPS-1180-91

REV	DESCRIPTION	DATE	BY	CHECKED	APP
	SEE SHEET 1				

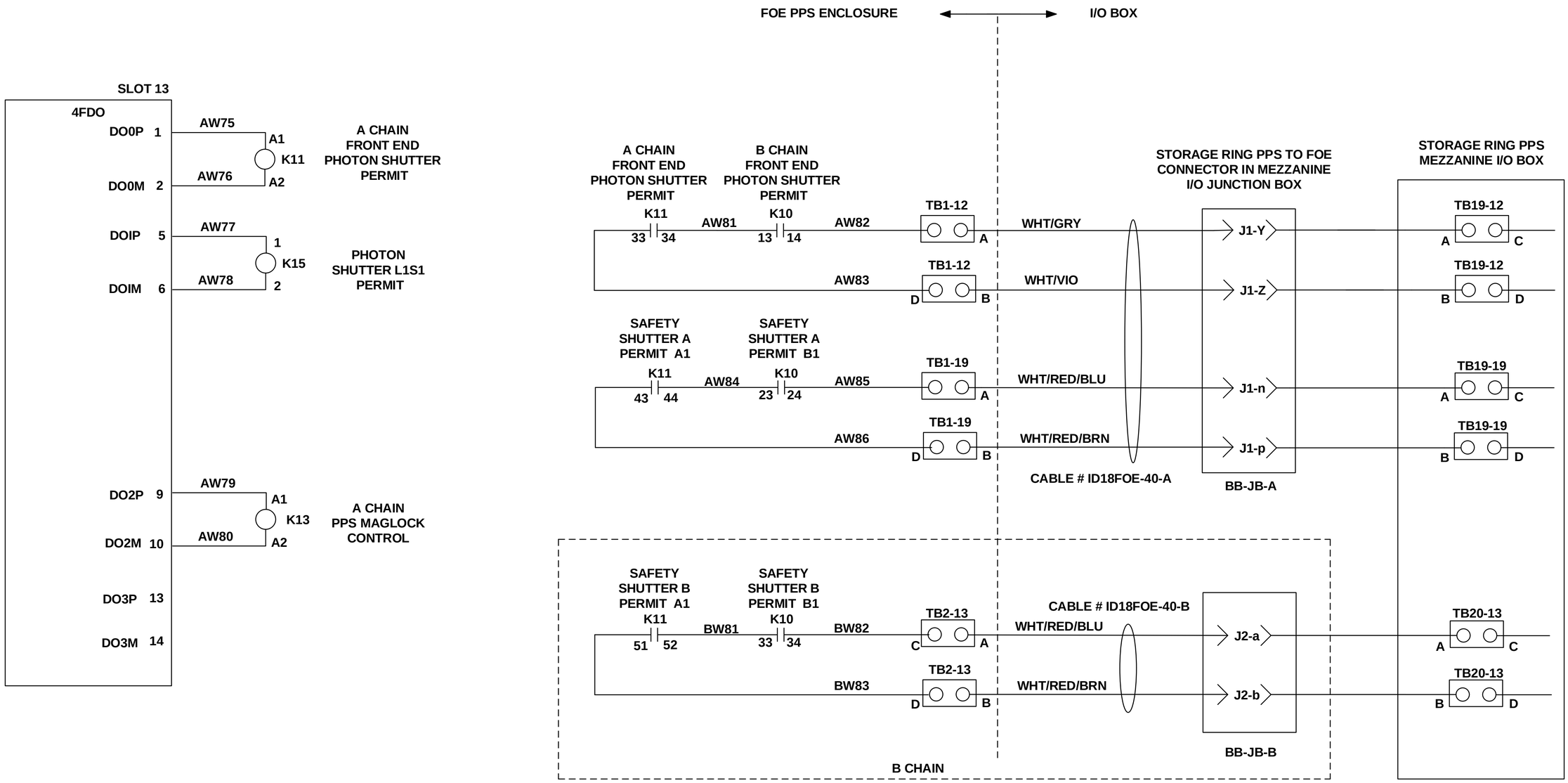

A

LT-EL-BL-EI	LT-EL-BL-EI-PPS-1180-91	A
DRAWING DIRECTORY	DRAWING NUMBER	REV
COMPUTER REPRODUCIBLE	SCALE: N/A	SHEET 13 OF 36

LT-EL-BL-EI-PPS-1180-91

REV	DESCRIPTION	DATE	BY	CHECKED	APP
	SEE SHEET 1				

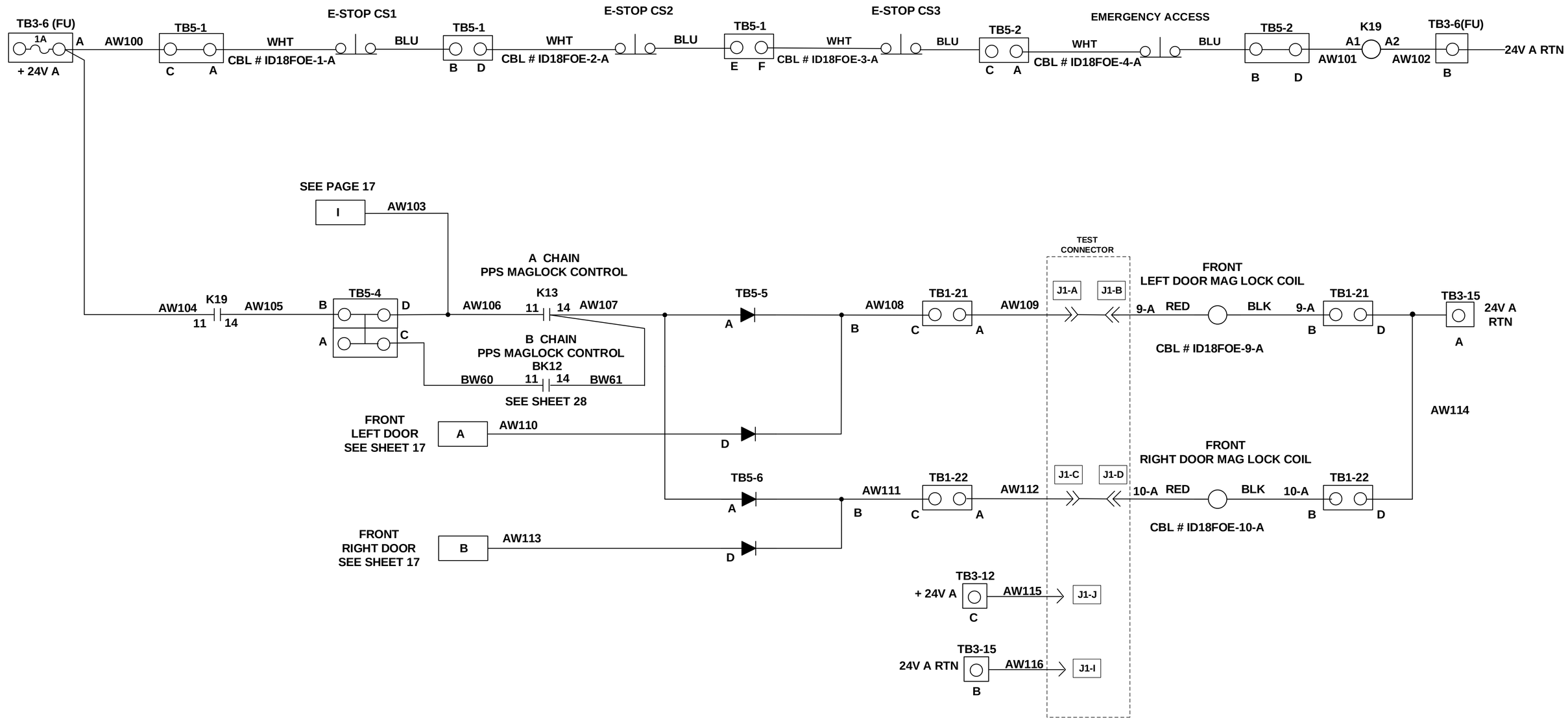

A

LT-EL-BL-EI	LT-EL-BL-EI-PPS-1180-91	A
DRAWING DIRECTORY	DRAWING NUMBER	REV
COMPUTER REPRODUCIBLE	SCALE: N/A	SHEET 14 OF 36

LT-EL-BL-EI-PPS-1180-91

REV	DESCRIPTION	DATE	BY	CHECKED	APP
	SEE SHEET 1				

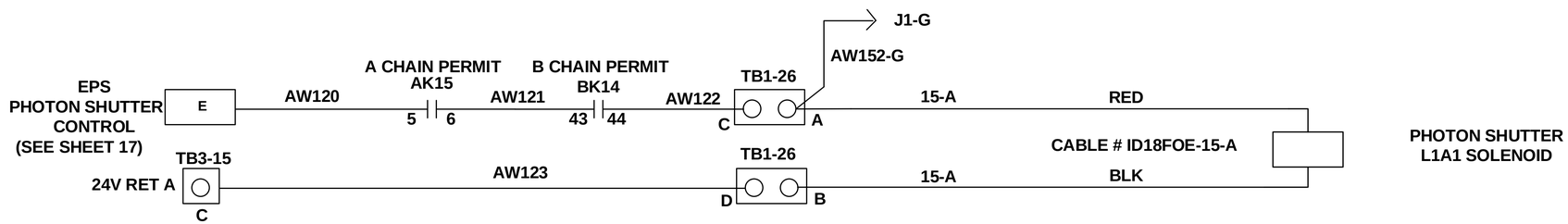

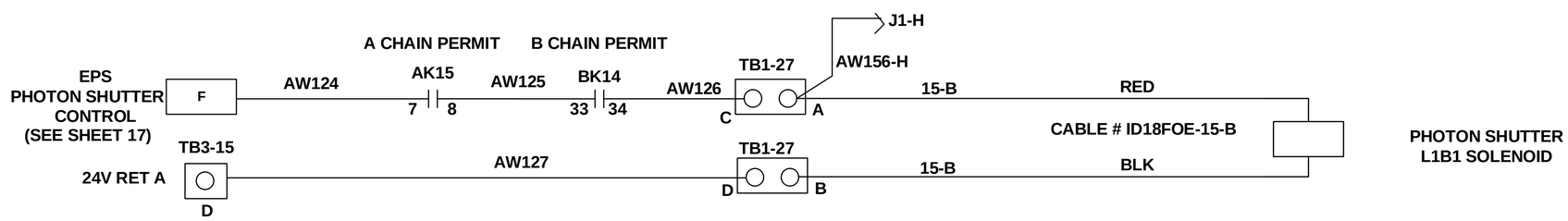

NOTES:

J1 REFERS TO TEST CONNECTOR

LT-EL-BL-EI-PPS-1180-91

A

LT-EL-BL-EI (DRAWING DIRECTORY)	LT-EL-BL-EI-PPS-1180-91 (DRAWING NUMBER)	A (REV)
COMPUTER REPRODUCIBLE	SCALE: N/A	SHEET 15 OF 36

REV	DESCRIPTION	DATE	BY	CHECKED	APP
	SEE SHEET 1				

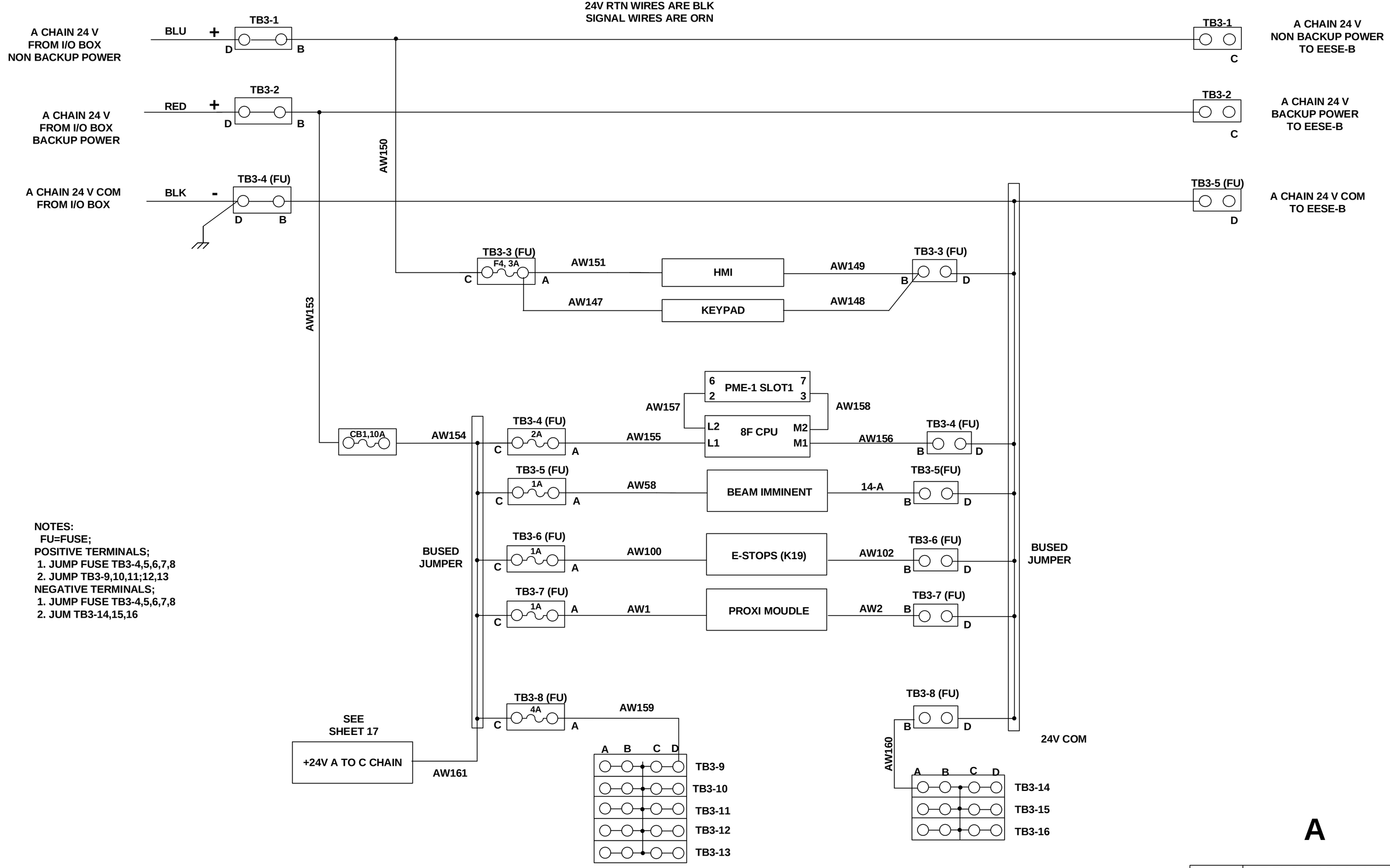

NOTES:
FU=FUSE;
POSITIVE TERMINALS;
1. JUMP FUSE TB3-4,5,6,7,8
2. JUMP TB3-9,10,11;12,13
NEGATIVE TERMINALS;
1. JUMP FUSE TB3-4,5,6,7,8
2. JUM TB3-14,15,16

A

LT-EL-BL-EI	LT-EL-BL-EI-PPS-1180-91	A
DRAWING DIRECTORY	DRAWING NUMBER	REV
COMPUTER REPRODUCIBLE	SCALE: N/A	SHEET 16 OF 36

LT-EL-BL-EI-PPS-1180-91

REV	DESCRIPTION	DATE	BY	CHECKED	APP
	SEE SHEET 1				

C CHAIN

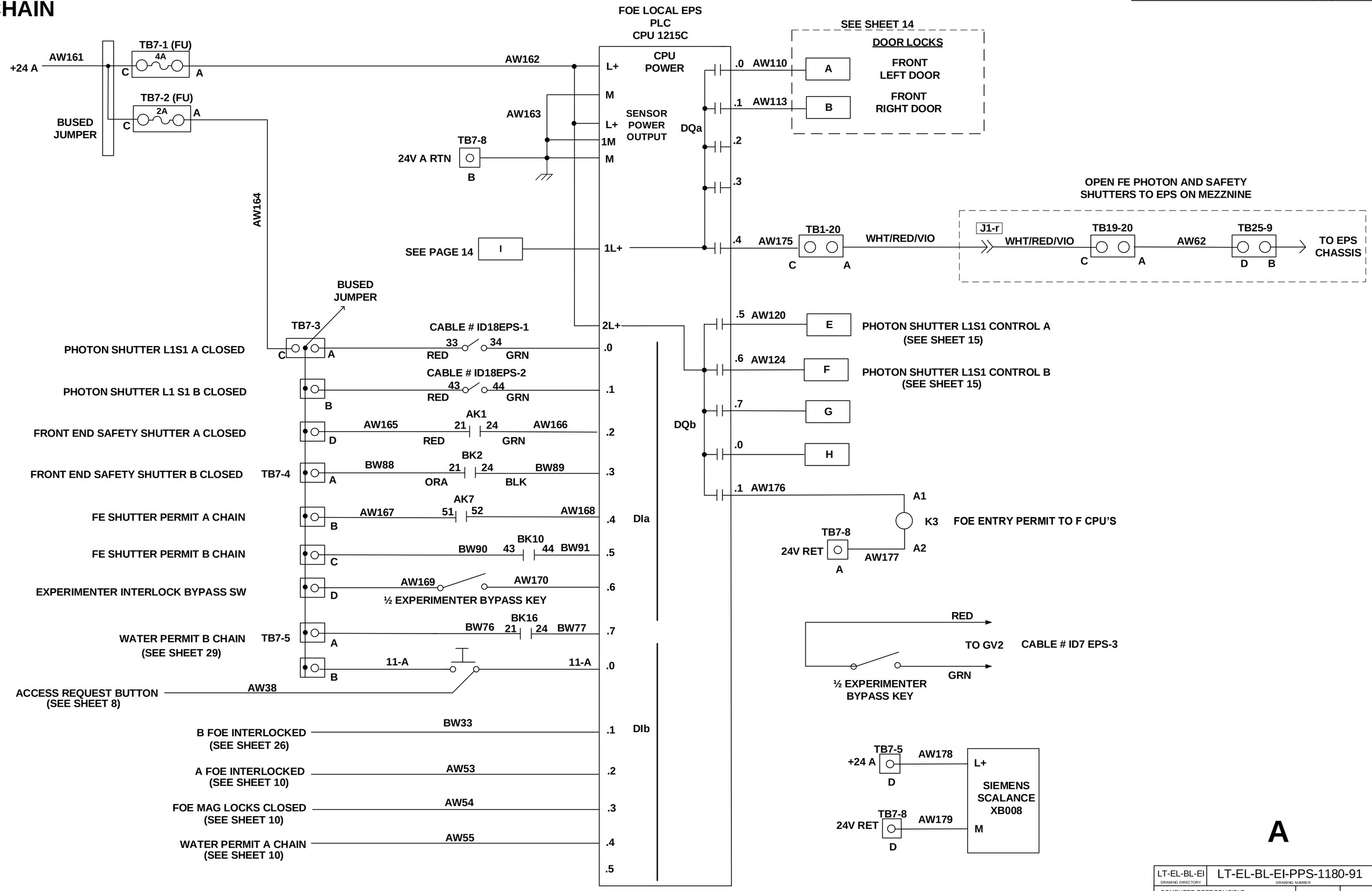

A

LT-EL-BL-EI	LT-EL-BL-EI-PPS-1180-91	A
DRAWING DIRECTORY	DRAWING NUMBER	REV

COMPUTER REPRODUCIBLE | SCALE: N/A | SHEET 17 OF 36

LT-EL-BL-EI-PPS-1180-91

REV	DESCRIPTION	DATE	BY	CHECKED	APP
	SEE SHEET 1				

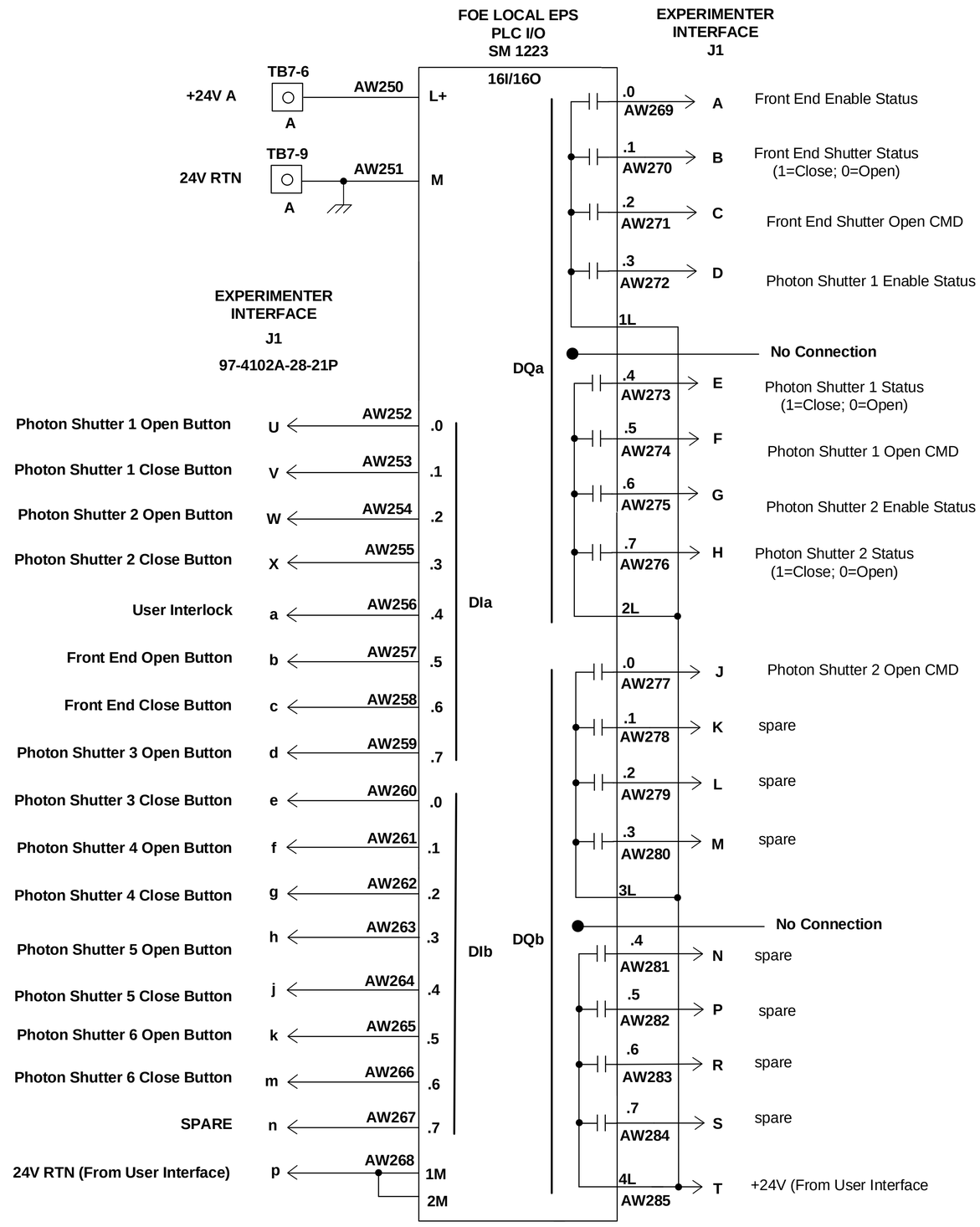

A

LT-EL-BL-EI	LT-EL-BL-EI-PPS-1180-91	A
DRAWING DIRECTORY	DRAWING NUMBER	REV
COMPUTER REPRODUCIBLE	SCALE: N/A	SHEET 18 OF 36

LT-EL-BL-EI-PPS-1180-91

REV	DESCRIPTION	DATE	BY	CHECKED	APP
	SEE SHEET 1				

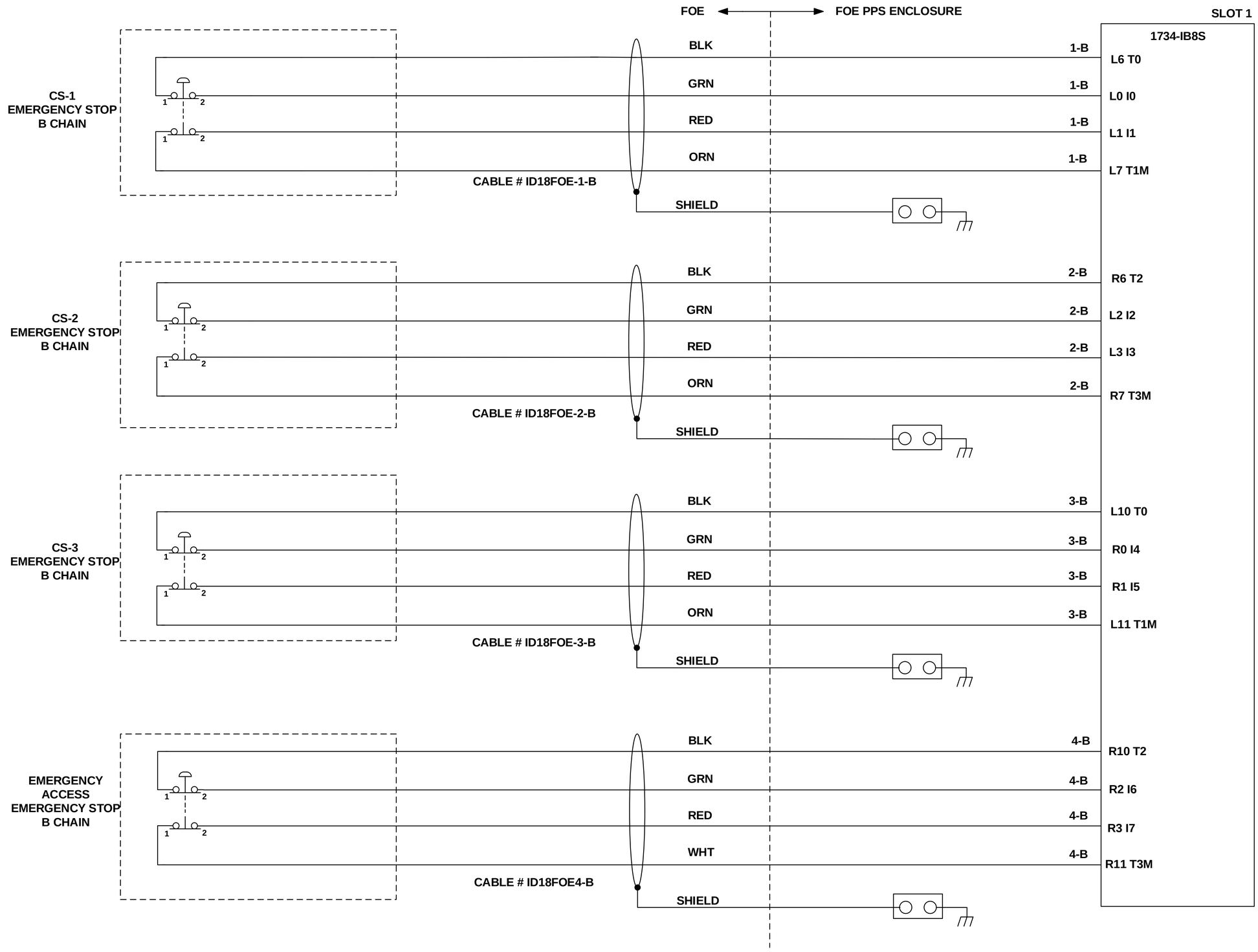

B

LT-EL-BL-EI (DRAWING DIRECTORY)	LT-EL-BL-EI-PPS-1180-91 (DRAWING NUMBER)	A (REV)
COMPUTER REPRODUCIBLE	SCALE: N/A	SHEET 19 OF 36

LT-EL-BL-EI-PPS-1180-91

REV	DESCRIPTION	DATE	BY	CHECKED	APP
	SEE SHEET 1				

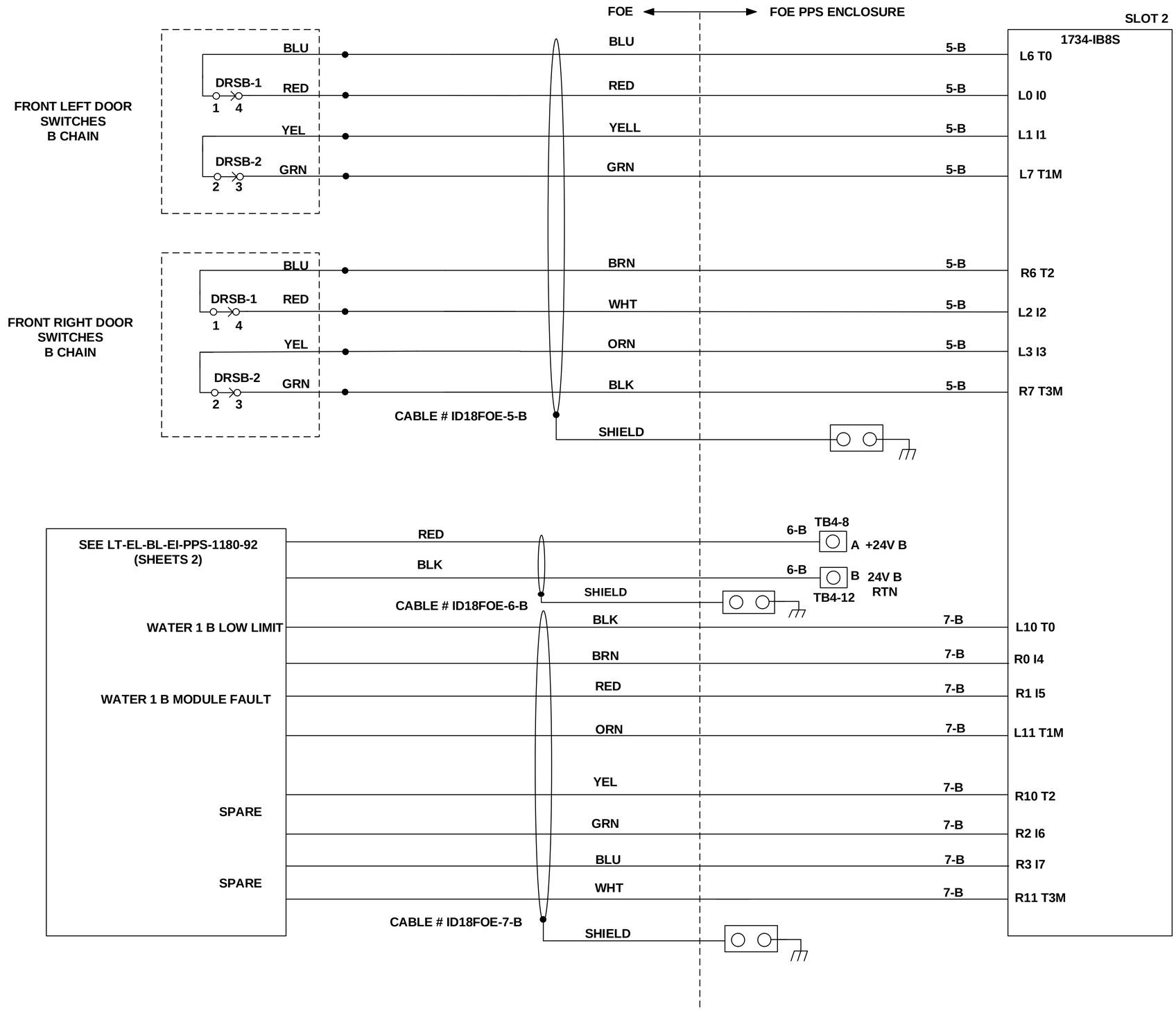

B

LT-EL-BL-EI	LT-EL-BL-EI-PPS-1180-91	A
DRAWING DIRECTORY	DRAWING NUMBER	REV

COMPUTER REPRODUCIBLE | SCALE: N/A | SHEET 20 OF 36

LT-EL-BL-EI-PPS-1180-91

REV	DESCRIPTION	DATE	BY	CHECKED	APP
	SEE SHEET 1				

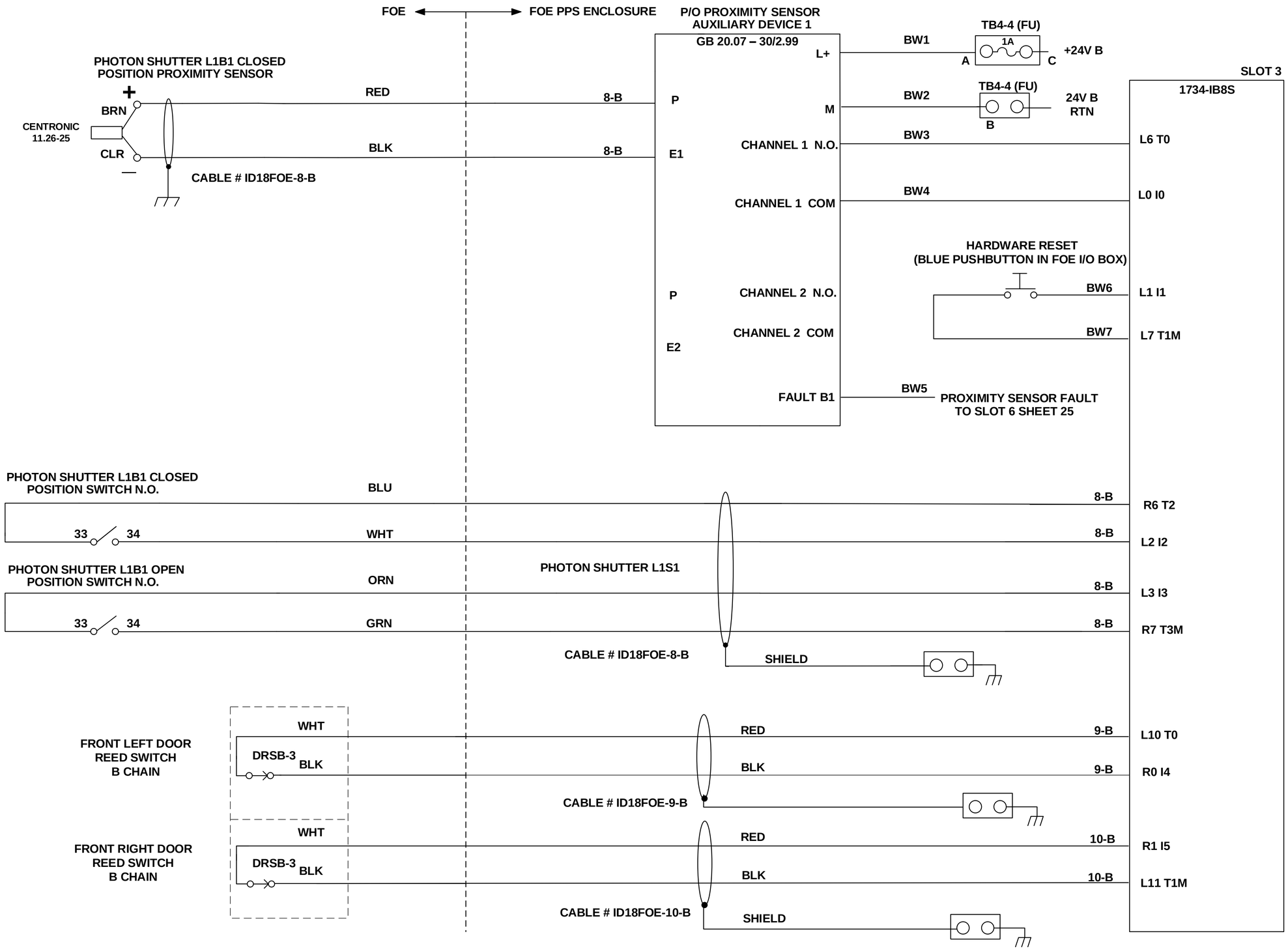

B

LT-EL-BL-EI	LT-EL-BL-EI-PPS-1180-91	A
DRAWING DIRECTORY	DRAWING NUMBER	REV

COMPUTER REPRODUCIBLE | SCALE: N/A | SHEET 21 OF 36

LT-EL-BL-EI-PPS-1180-91

REV	DESCRIPTION	DATE	BY	CHECKED	APP
	SEE SHEET 1				

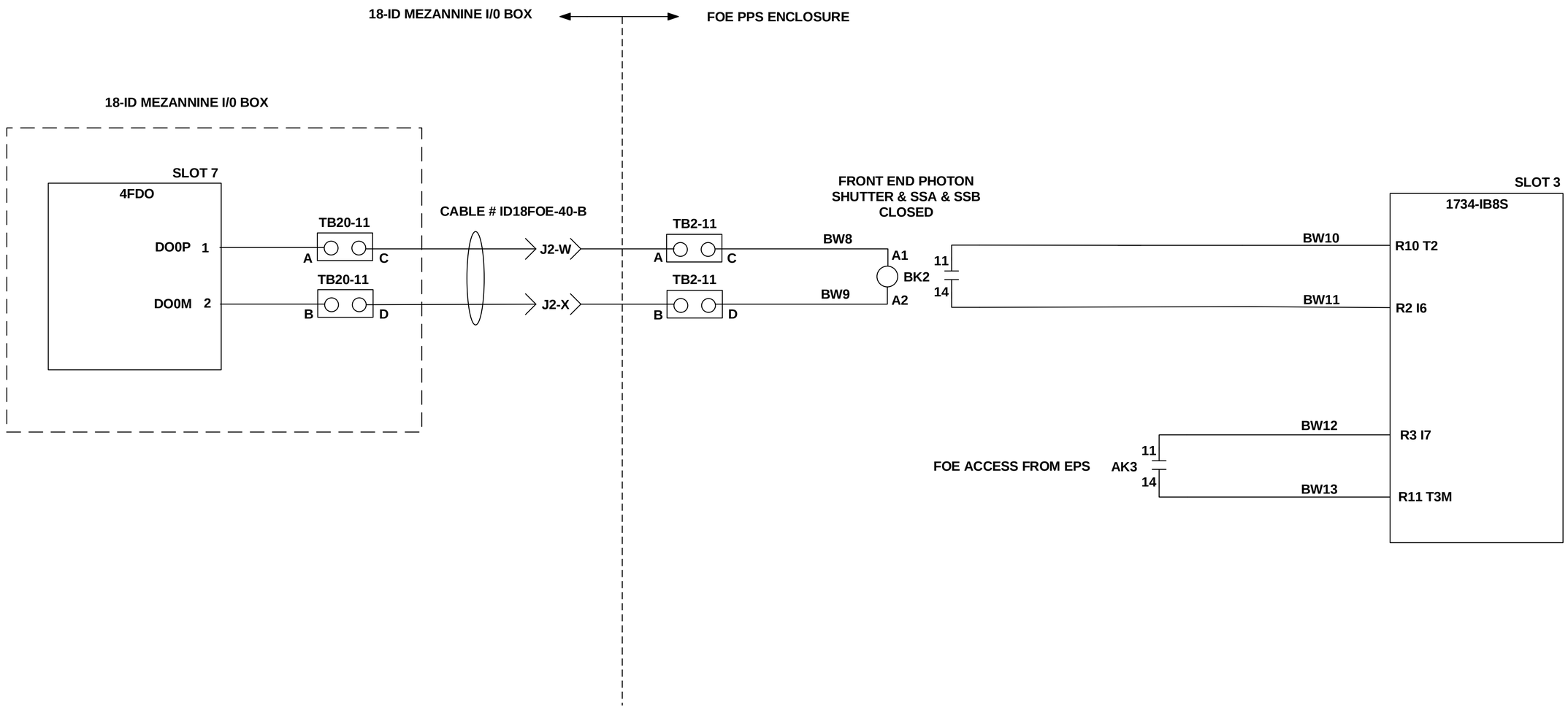

B

LT-EL-BL-EI	LT-EL-BL-EI-PPS-1180-91	A
DRAWING DIRECTORY	DRAWING NUMBER	REV

COMPUTER REPRODUCIBLE | SCALE: N/A | SHEET 22 OF 36

LT-EL-BL-EI-PPS-1180-91

REV	DESCRIPTION	DATE	BY	CHECKED	APP
	SEE SHEET 1				

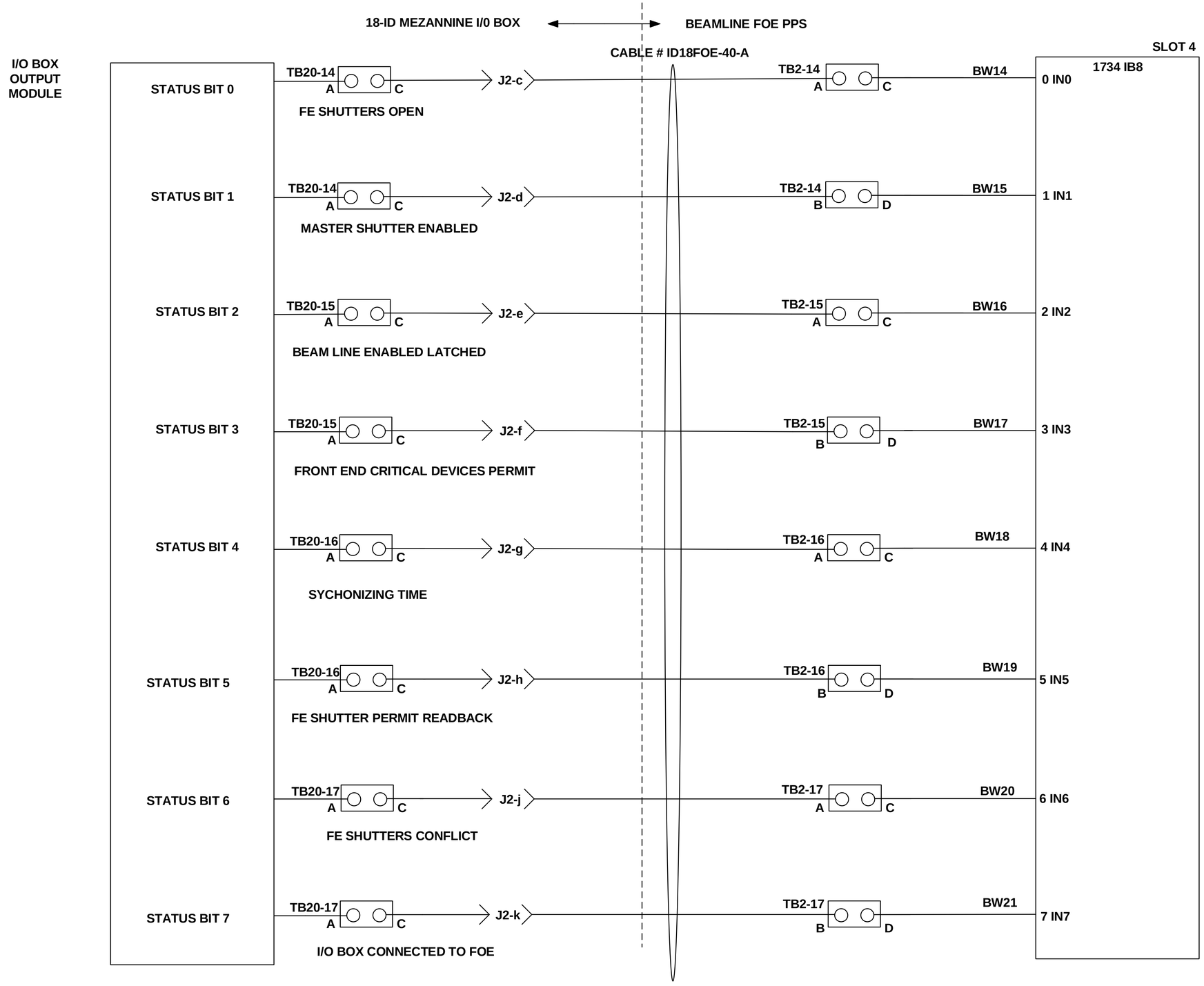

B

LT-EL-BL-EI (DRAWING DIRECTORY)	LT-EL-BL-EI-PPS-1180-91 (DRAWING NUMBER)	A (REV)
COMPUTER REPRODUCIBLE	SCALE: N/A	SHEET 23 OF 36

LT-EL-BL-EI-PPS-1180-91

REV	DESCRIPTION	DATE	BY	CHECKED	APP
	SEE SHEET 1				

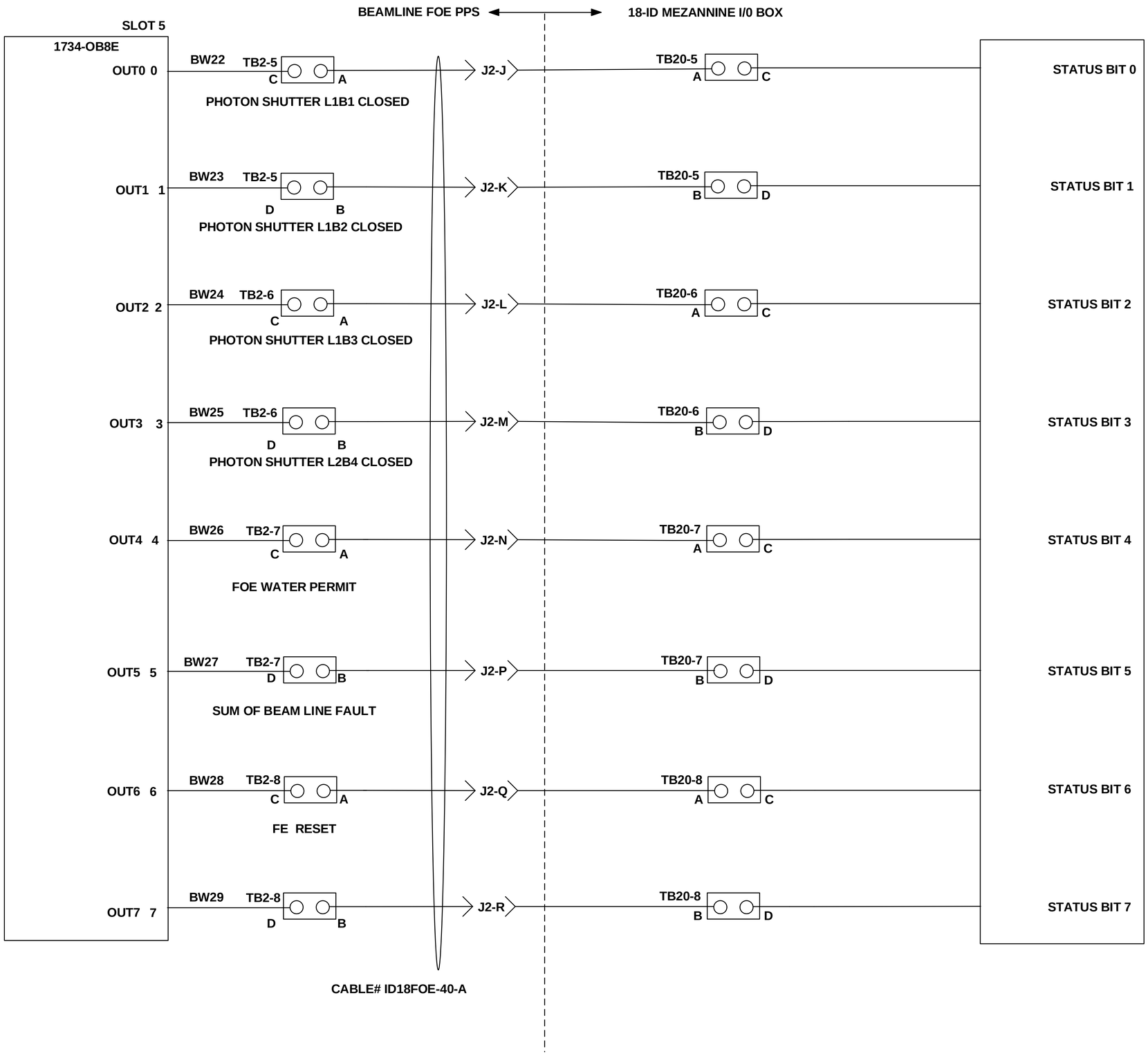

B

LT-EL-BL-EI (DRAWING DIRECTORY)	LT-EL-BL-EI-PPS-1180-91 (DRAWING NUMBER)	A (REV)
COMPUTER REPRODUCIBLE	SCALE: N/A	SHEET 24 OF 36

LT-EL-BL-EI-PPS-1180-91

REV	DESCRIPTION	DATE	BY	CHECKED	APP
	SEE SHEET 1				

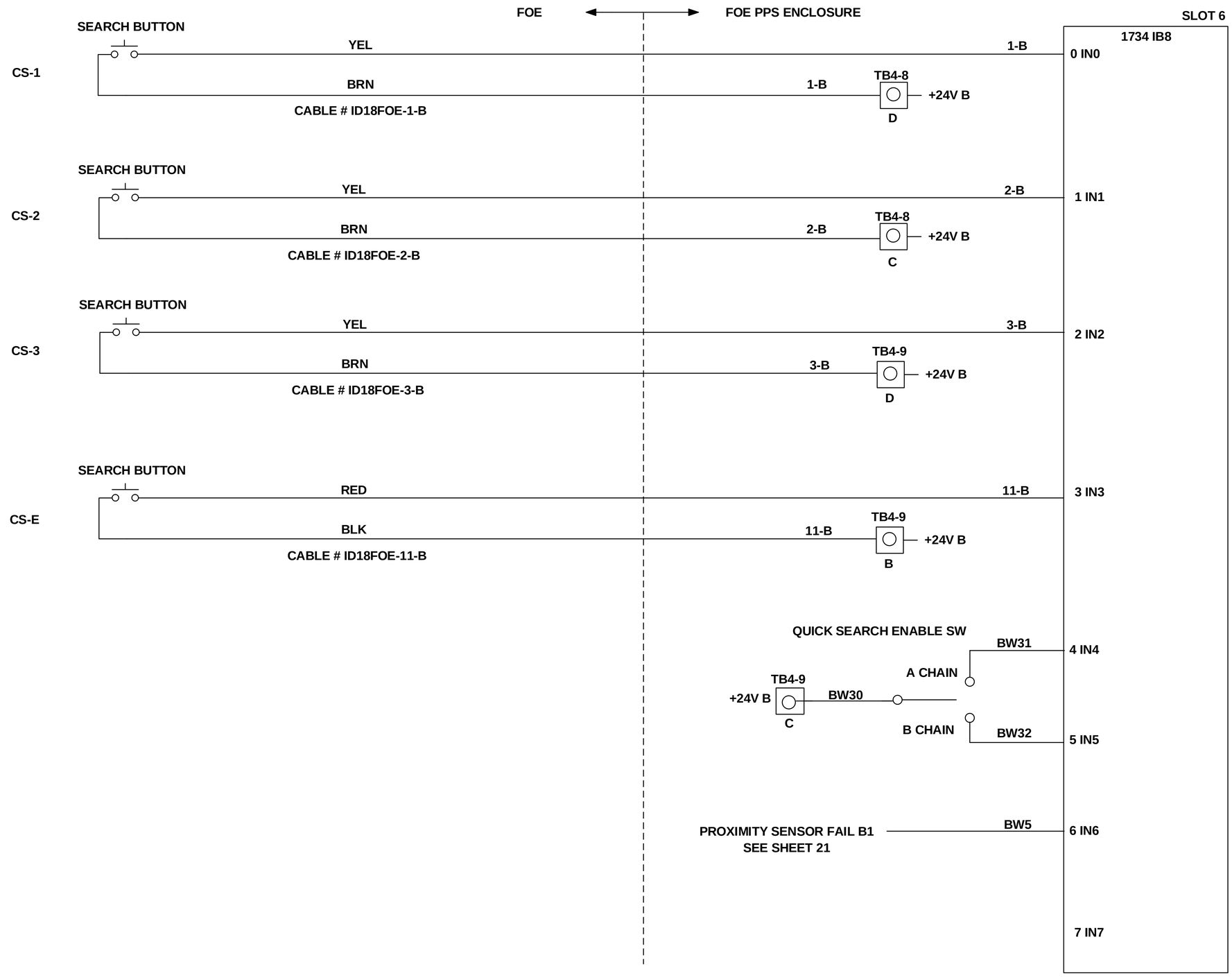

B

LT-EL-BL-EI	LT-EL-BL-EI-PPS-1180-91	A
DRAWING DIRECTORY	DRAWING NUMBER	REV

COMPUTER REPRODUCIBLE | SCALE: N/A | SHEET 25 OF 36

LT-EL-BL-EI-PPS-1180-91

REV	DESCRIPTION	DATE	BY	CHECKED	APP
	SEE SHEET 1				

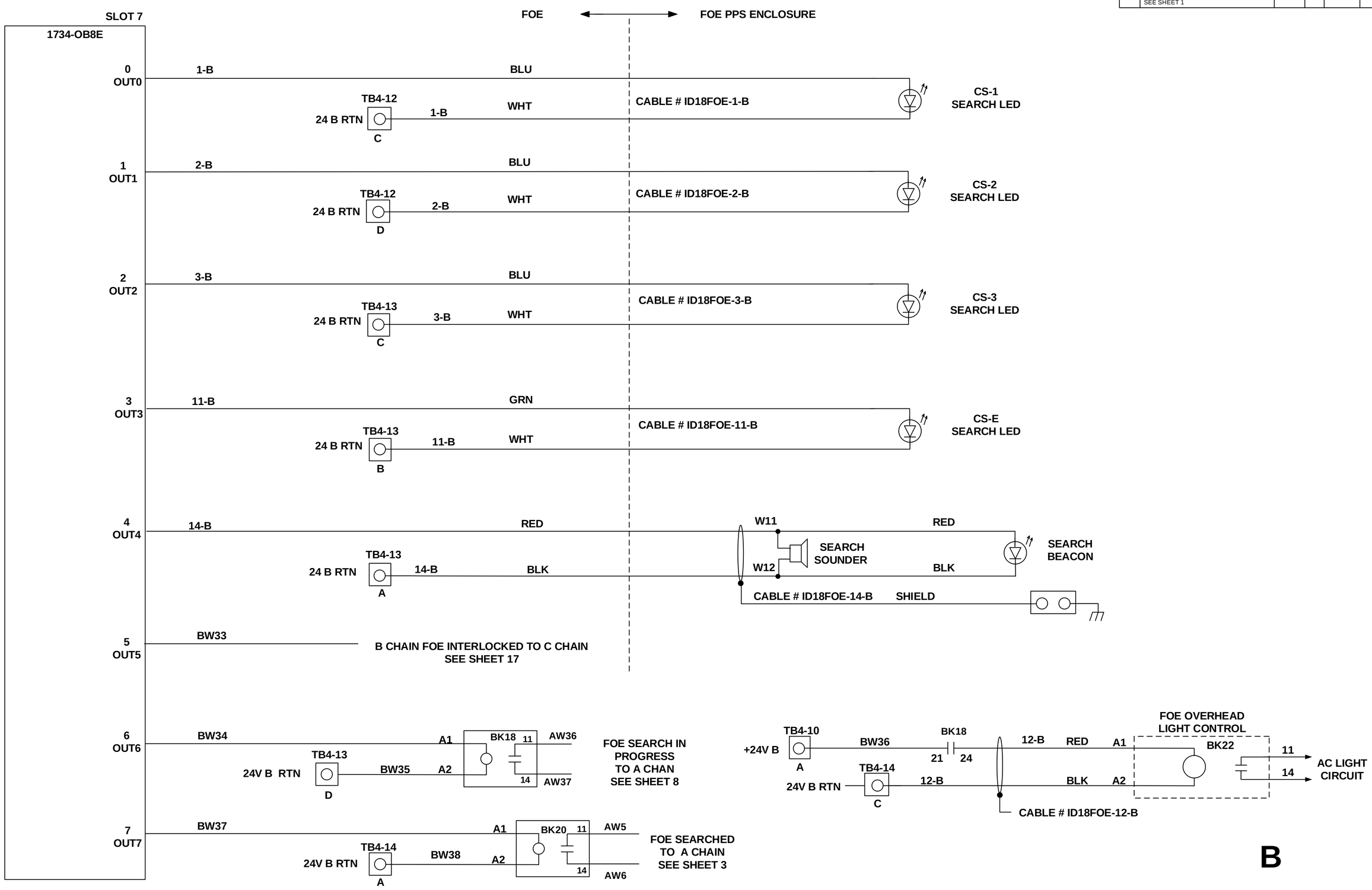

LT-EL-BL-EI (DRAWING DIRECTORY)	LT-EL-BL-EI-PPS-1180-91 (DRAWING NUMBER)	A (REV)
COMPUTER REPRODUCIBLE	SCALE: N/A	SHEET 26 OF 36

LT-EL-BL-EI-PPS-1180-91

REV	DESCRIPTION	DATE	BY	CHECKED	APP
	SEE SHEET 1				

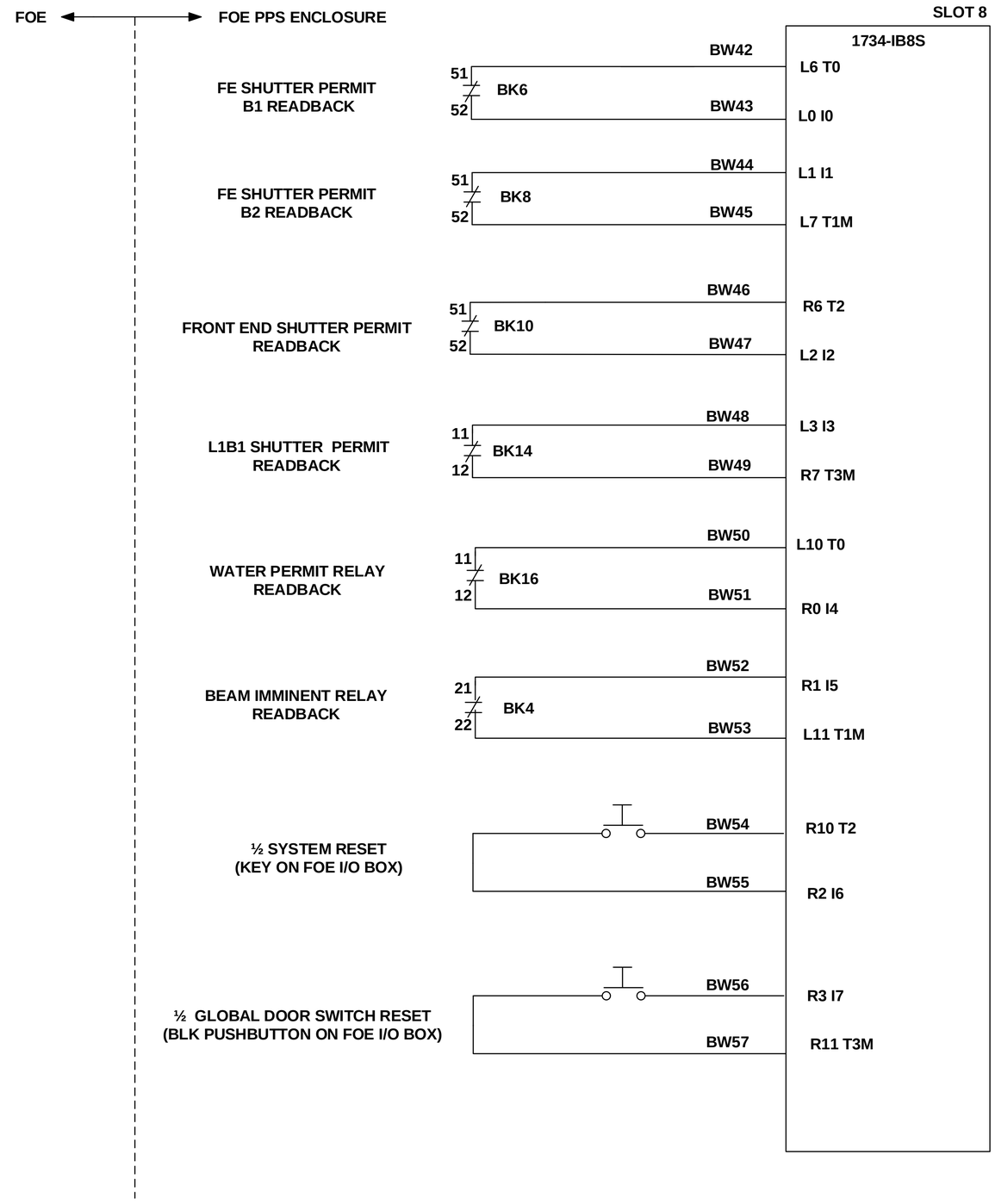

B

LT-EL-BL-EI (DRAWING DIRECTORY)	LT-EL-BL-EI-PPS-1180-91 (DRAWING NUMBER)	A (REV)
COMPUTER REPRODUCIBLE	SCALE: N/A	SHEET 27 OF 36

LT-EL-BL-EI-PPS-1180-91

REV	DESCRIPTION	DATE	BY	CHECKED	APP
	SEE SHEET 1				

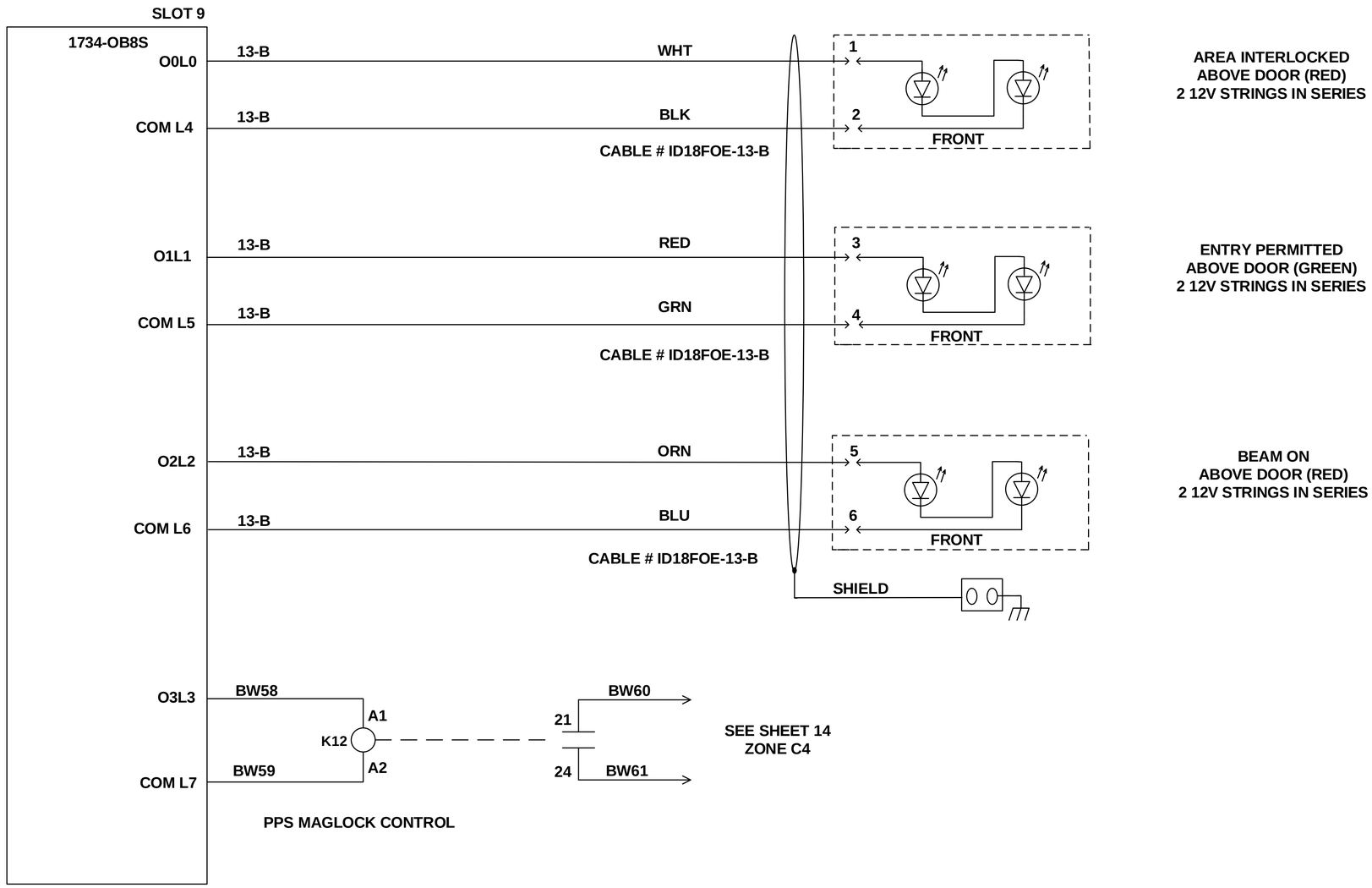

B

LT-EL-BL-EI	LT-EL-BL-EI-PPS-1180-91	A
DRAWING DIRECTORY	DRAWING NUMBER	REV
COMPUTER REPRODUCIBLE	SCALE: N/A	SHEET 28 OF 36

LT-EL-BL-EI-PPS-1180-91

REV	DESCRIPTION	DATE	BY	CHECKED	APP
	SEE SHEET 1				

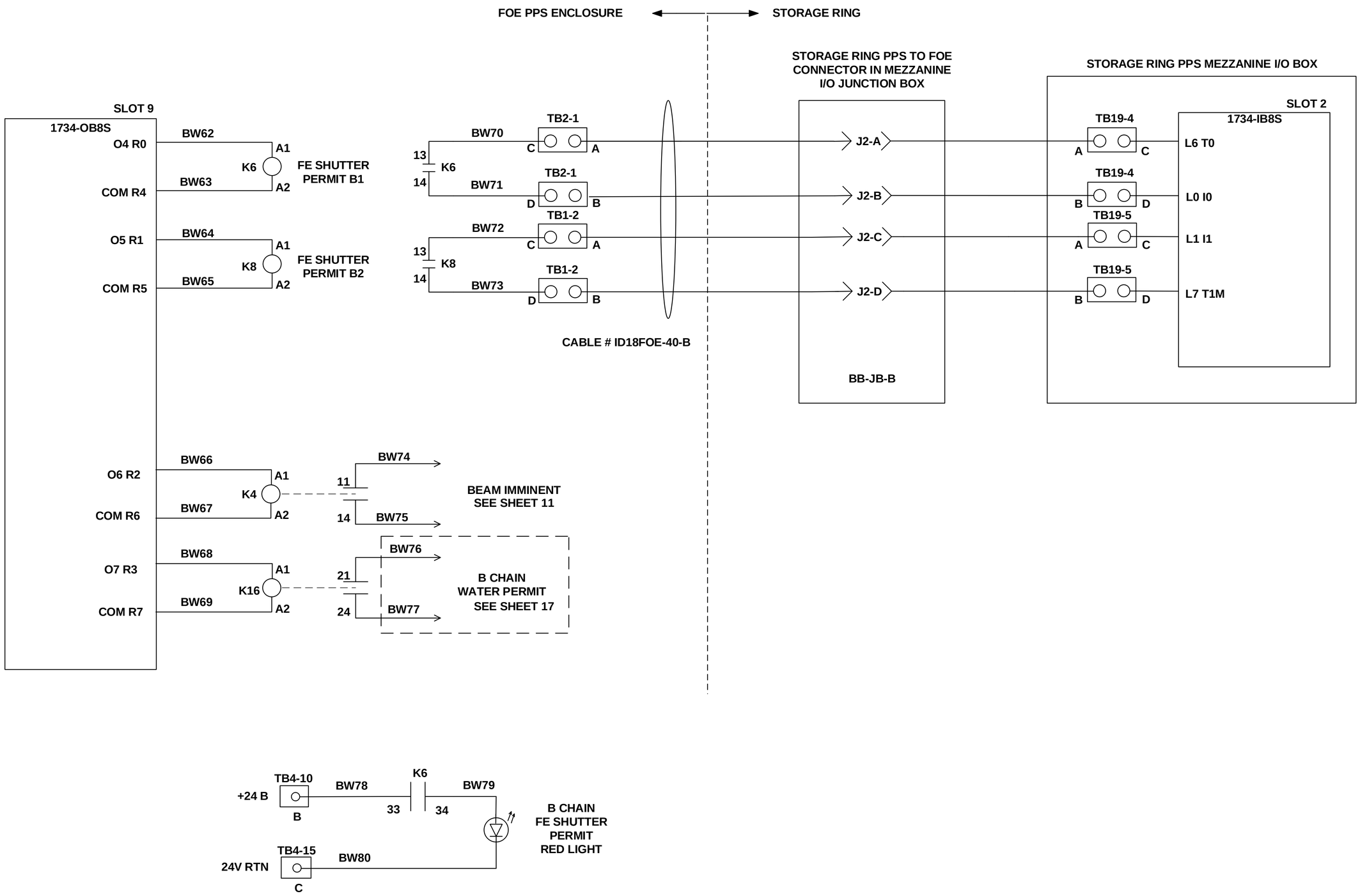

B

LT-EL-BL-EI DRAWING DIRECTORY	LT-EL-BL-EI-PPS-1180-91 DRAWING NUMBER	A REV
COMPUTER REPRODUCIBLE	SCALE: N/A	SHEET 29 OF 36

LT-EL-BL-EI-PPS-1180-91

REV	DESCRIPTION	DATE	BY	CHECKED	APP
	SEE SHEET 1				

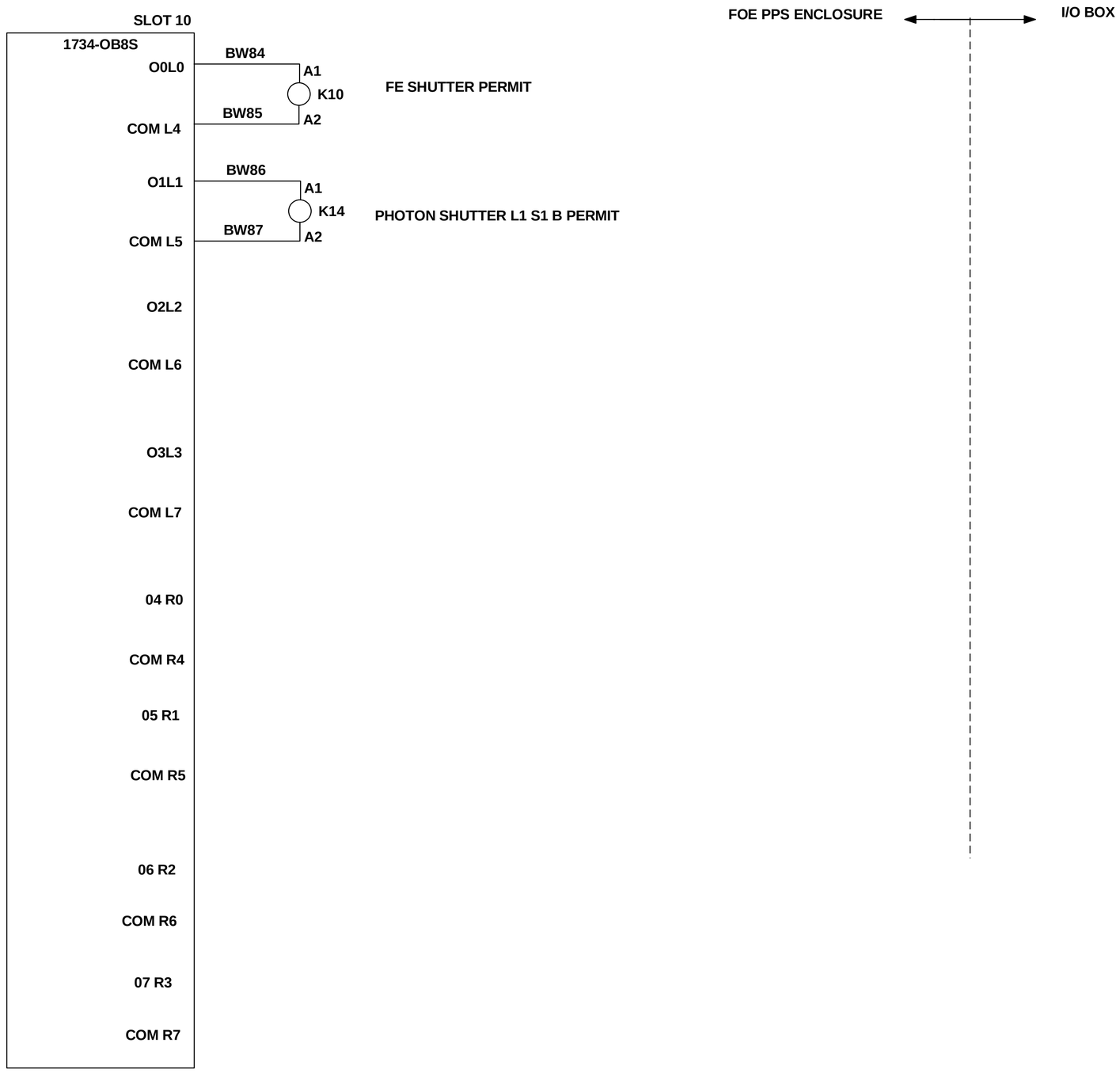

B

LT-EL-BL-EI DRAWING DIRECTORY	LT-EL-BL-EI-PPS-1180-91 DRAWING NUMBER	A REV
COMPUTER REPRODUCIBLE	SCALE: N/A	SHEET 30 OF 36

LT-EL-BL-EI-PPS-1180-91

REV	DESCRIPTION	DATE	BY	CHECKED	APP
	SEE SHEET 1				

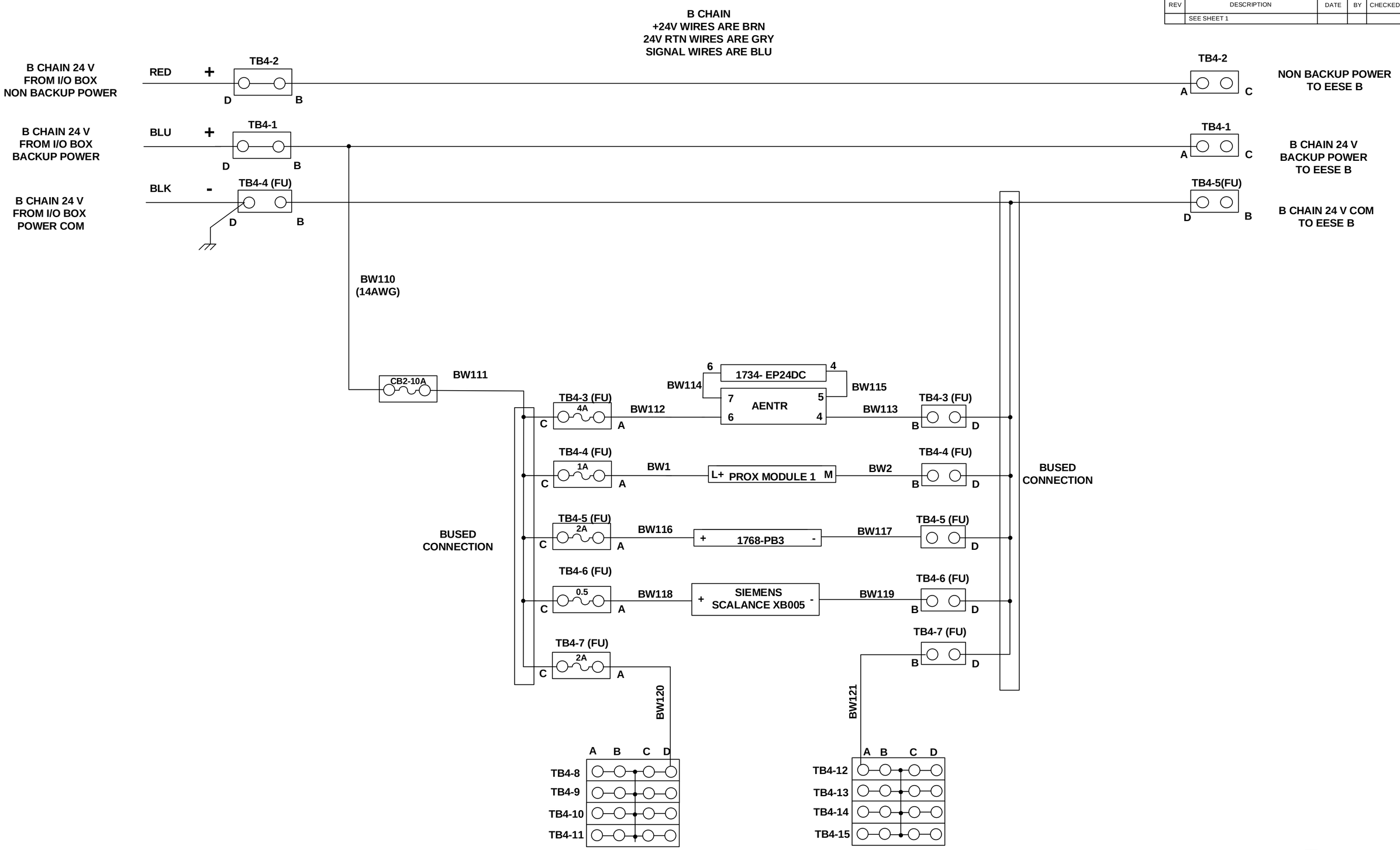

B

LT-EL-BL-EI	LT-EL-BL-EI-PPS-1180-91	A
DRAWING DIRECTORY	DRAWING NUMBER	REV
COMPUTER REPRODUCIBLE	SCALE: N/A	SHEET 31 OF 36

LT-EL-BL-EI-PPS-1180-91

REV	DESCRIPTION	DATE	BY	CHECKED	APP
	SEE SHEET 1				

18-ID NETWORK LAYOUT

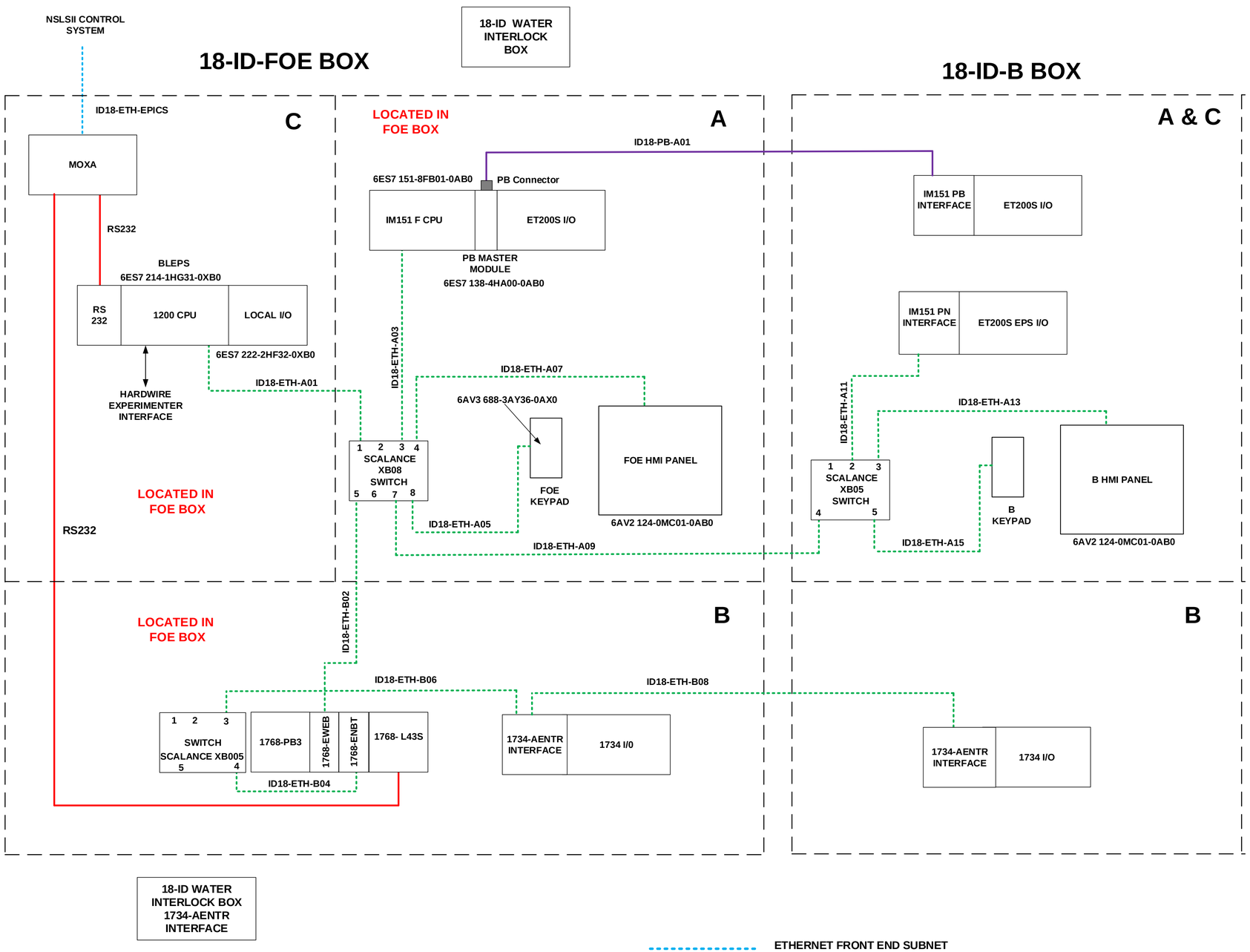

NOTES:
(1) FOE WATER INTERLOCK IO IS NOT IN ALL BEAMLINE PPS. IF PPS DOES NOT HAS WATER INTERLOCK IO, B CHAIN ETHERNET CABLE NUMBER WILL BE SEQUENTIALLY NAMED AFTER ID7-ETH-004.
(2) BEAM LINE ID7, ID?? HAVE WATER INTERLOCK IO.

LT-EL-BL-EI (DRAWING DIRECTORY)	LT-EL-BL-EI-PPS-1180-91 (DRAWING NUMBER)	A (REV)
COMPUTER REPRODUCIBLE	SCALE: N/A	SHEET 32 OF 36

LT-EL-BL-EI-PPS-1180-91

REV	DESCRIPTION	DATE	BY	CHECKED	APP
	SEE SHEET 1				

A CHAIN

Row 1

CB-1

- Ground 3044092
- CIRCUIT BREAKER 10A
- 2X UDK4 2775016
- UDK4 End Cover 2775113
- End Cap For Fuses: EPDDFL4U
- 6x Fuse Holders DDFL4U

TB-3

- 5X UDK4 2775016
- Ground 3044092
- 3X UDK4 2775016
- Ground 3044092
- UDK4 End Cover 2775113
- Siemens IM-151 6ES7-151-8FBOI-0AB0
- Profibus 6ES7 138-4HA00-0AB0
- Siemens PME 6ES7-193-4CC20-0AA0
- 4x Dual Slots Siemens 6ES7-193-4CF40-0AA0
- 5x Single Slot Siemens 6ES7-193-4CA40-0AA0
- 3x Dual Slots Siemens 6ES7-193-4CF40-0AA0

Row 2

TB-1

- End Cap For: D-UTTB 2,5/4 3047293
- 2X Ground 3044092
- 26x Terminal Block UTTB 2,5: 3044636
- 2X Ground 3044092

AK1	AK5	AK13	AK17	AK19	AK15
ABB Relay Socket CR-PSS	ABB Relay Socket CR-PSS	ABB Relay Socket CR-PSS	ABB Relay Socket CR-PSS	ABB Relay Socket CR-PSS	IDEC Relay Socket SF1V-4-07L

AK7	AK9	AK11
Altech Relay OA5601	Altech Relay OA5601	Altech Relay OA5601

TB-5

- 3X TB Konnect It 3 Circuit KN-TL-14
- UDK4 2775016
- 2X Diode TB UTTB 2.5 2DIO/O-UL/UR-UL
- Ground 3044092
- Konnect It End Cover KN-EC-TL
- UDK4 End Cover 2775113
- Diode TB End Cover 3047293

AUX DEVICE A CHAIN

- Klaschka D-75242

BK22

- Relay Socket ES 50

BK22 LOCATED INSIDE HUTCH IN 6 X 6 BOX WITH LIGHT CIRCUIT

B CHAIN

Row 3

- Ground 3044092
- Allen Bradley Power Supply 1768-PB3 A
- Allen Bradley Ethernet/IP Communication Interface 176-EWEB
- Allen Bradley Ethernet/IP Communication Interface 1768 ENBT/A
- Allen Bradley Compact Guard Logix 1768-L43S/B
- Allen Bradley End Cap 1769-ECR
- 2x Ground 3044092
- Allen Bradley 1734 AENTR Ethernet Interface
- 8x Single Slots Allen Bradley 1734-Top3
- Power Module 1734 EP24DC
- 8x Single Slots Allen Bradley 1734-Top3

Row 4

CB-2

- UDK4 End Cover 2775113
- CIRCUIT BREAKER 10A
- 2X UDK4 2775016
- End Cap For Fuses: EPDDFL4U
- 5x Fuse Holders DDFL4U

TB-4

- 4X UDK4 2775016
- UDK4 End Cover 2775113
- 4X UDK4 2775016
- End Cap For: D-UTTB 2,5/43047293
- End Block E/UK1

TB-2

- 20x Terminal Block UTTB 2,5: 3044636
- 4x Ground 3044092

BK2	BK4	BK12	BK16	BK18	BK20
Relay Socket ES 50	Relay Socket ES 50	Relay Socket ES 50	Relay Socket ES 50	Relay Socket ES 50	Relay Socket ES 50

BK14	BK6	BK8	BK10
Elesta Relay Socket SRD-SIM4 H300725	Phoenix PSR-SCF 24UC Safety Relay Socket 2981444	Phoenix PSR-SCF 24UC Safety Relay Socket 2981444	Phoenix PSR-SCF 24UC Safety Relay Socket 2981444

AUX DEVICE B CHAIN

- Klaschka D-75242
- Siemens Scalance XB005

C CHAIN

Row 5

TB 7

- End Clamp E/UK 1
- End Cap For Fuses: EPDDFL4U
- 2x Fuse Holders DDFL4U
- 5X UDK4 2775016
- Ground 3044092
- 3X UDK4 2775016
- 3x Ground 3044092
- Siemens Scalance XB008
- Siemens CM 1241-RS232
- Siemens Simatic S7-1200-CPU-1215C DC/DC/RLY
- Siemens SM 1223 DC/RLY
- MOXA Nport IA5-250A

K3

- ABB Relay Socket CR-PSS

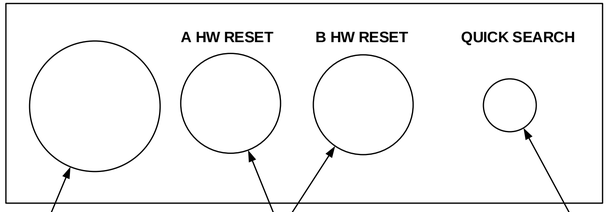

LT-EL-BL-EI (DRAWING DIRECTORY)	LT-EL-BL-EI-PPS-1180-91 (DRAWING NUMBER)	A (REV)
COMPUTER REPRODUCIBLE	SCALE: N/A	SHEET 33 OF 36

LT-EL-BL-EI-PPS-1180-91

REV	DESCRIPTION	DATE	BY	CHECKED	APP
	SEE SHEET 1				

ROW 1:

	[20]					
	[2]					
CB 1	WMZS1B10	N/A	Circuit Breaker B10	Eaton		
TB 3	[19]	x2 [13]	[6]	x6 [8]		
	[19]	x3 [13]	[2]	[19]	x4 [13]	[2]

SLOT	MODULE	SOCKET	DESCRIPTION	VENDOR
	6ES7-151-8FB01-0AB0	N/A	IM-151-8 F-CPU	SIEMENS
	6ES7-138-4HA00-0AB0	N/A	DP INTERFACE	SIEMENS
1	6ES7-138-4CA50-0AB0	6ES7-193-4CC20-0AA0	PME 24TO 48VDC	SIEMENS
2	6ES7-138-4FA04-0AB0	6ES7-193-4CF40-0AA0	4/8FDI SAFETY INPUT	SIEMENS
3	6ES7-138-4FA04-0AB0	6ES7-193-4CF40-0AA0	4/8FDI SAFETY INPUT	SIEMENS
4	6ES7-138-4FA04-0AB0	6ES7-193-4CF40-0AA0	4/8FDI SAFETY INPUT	SIEMENS
5	6ES7-138-4FA04-0AB0	6ES7-193-4CF40-0AA0	4/8FDI SAFETY INPUT	SIEMENS
6	6ES7-131-4BF00-0AB0	6ES7-193-4CA40-0AA0	8DI STANDARD IN	SIEMENS
7	6ES7-132-4BF00-0AA0	6ES7-193-4CA40-0AA0	8DO STANDARD OUT	SIEMENS
8	6ES7-131-4BF00-0AB0	6ES7-193-4CA40-0AA0	8DI STANDARD IN	SIEMENS
9	6ES7-131-4BF00-0AB0	6ES7-193-4CA40-0AA0	8DI STANDARD IN	SIEMENS
10	6ES7-132-4BF00-0AA0	6ES7-193-4CA40-0AA0	8DO STANDARD OUT	SIEMENS
11	6ES7-138-4FB03-0AB0	6ES7-193-4CF40-0AA0	4FDO SAFETY OUTPUT	SIEMENS
12	6ES7-138-4FB03-0AB0	6ES7-193-4CF40-0AA0	4FDO SAFETY OUTPUT	SIEMENS
13	6ES7-138-4FB03-0AB0	6ES7-193-4CF40-0AA0	4FDO SAFETY OUTPUT	SIEMENS
14	6ES7-193-4JA00-0AA0	N/A	TERMINATION MODULE	SIEMENS

ROW 2:

TB 1	[2]	[2]	[20]	x81 [1]	[2]	[2]

RELAY	MODULE	SOCKET	DESCRIPTION	VENDOR
AK1	OW5669.12/983/61	RT 78626	RELAY	SHRACK
AK5	OW5669.12/983/61	RT 78626	RELAY	SHRACK
AK13	OW5669.12/983/61	RT 78626	RELAY	SHRACK
AK17	OW5669.12/983/61	RT 78626	RELAY	SHRACK
AK19	OW5669.12/983/61	RT 78626	RELAY	SHRACK
AK15	RF1V-3A1BL-D24	SF1V-4-07L	RELAY	IDEC
AK7	OA5601	N/A	ALTECH RELAY	BNL
AK9	OA5601	N/A	ALTECH RELAY	BNL
AK11	OA5601	N/A	ALTECH RELAY	BNL

TB 5	[15]	x3 [14]	[19]	[13]	x4 [16]	[17]
AMPLIFIER	ZSS2/b00ca-1.68	N/A	SENSOR SWITCH AMPLIFIER	KLASCHKA		

ROW 3:

SLOT	MODULE	SOCKET	DESCRIPTION	VENDOR
	1734-AENTR	N/A	24V DC EHTERNET ADAPTER	AB
1	1734-IB8S	1734-TOP3 (2)	8 INPUT SAFETY	AB
2	1734-IB8S	1734-TOP3 (2)	8 INPUT SAFETY	AB
3	1734-IB8S	1734-TOP3 (2)	8 INPUT SAFETY	AB
4	1734-IB8S	1734-TOP3 (2)	8 INPUT SAFETY	AB
5	1734-IB8	1734-TOP3	STANDARD 8 INPUT MODULE	AB
6	1734-EP24DC	N/A	POWER MODULE PM-E	AB
	1734-OB8E	1734-TOP3	8 CURRENT SOURCE	AB
7	1734-IB8	1734-TOP3	STANDARD 8 INPUT MODULE	AB
8	1734-IB8S	1734-TOP3 (2)	8 INPUT SAFETY	AB
9	1734-OW4	1734-TOP3	4 FORM RELAY MODULE	AB
10	1734-OW4	1734-TOP3	4 FORM RELAY MODULE	AB
11	1734-OB8S	1734-TOP3 (2)	8 OUTPUT SAFETY	AB
12	1734-OB8S	1734-TOP3 (2)	8 OUTPUT SAFETY	AB

ROW 4:

	[20]					
	[2]					
CB 2	WMZS1B10	N/A	Circuit Breaker B10	Eaton		
TB 4	[19]	x2 [13]	[6]	x4 [8]		
	[19]	x3 [13]	[2]	[19]	x3 [13]	[2]
	[20]					
	[2]	[2]	[2]	[2]		
TB 2	[3]	x70 [1]				
	[2]	[2]	[2]			

RELAY	MODULE	SOCKET	DESCRIPTION	VENDOR
BK2	SGR282Z	RT 78626	RELAY	SHRACK
BK4	SGR282Z	RT 78626	RELAY	SHRACK
BK12	SGR282Z	RT 78626	RELAY	SHRACK
BK16	SGR282Z	RT 78626	RELAY	SHRACK
BK18	SGR282Z	RT 78626	RELAY	SHRACK
BK20	SGR282Z	RT 78626	RELAY	SHRACK
BK14	SIM222 24VDC	SRD-SIM4	24V RELAY	ELESTA
BK6	2981444		PSR-SCF 24UC SAFETY RELAY	PHOENIX
BK8	2981444		PSR-SCF 24UC SAFETY RELAY	PHOENIX
BK10	2981444		PSR-SCF 24UC SAFETY RELAY	PHOENIX
AMPLIFIER	ZSS2/b00ca-1.68	N/A	SENSOR SWITCH AMPLIFIER	KLASCHKA

ROW 5:

TB 7	[19]	x2 [13]	[6]	x4 [8]		
	[19]	x3 [13]	[2]	[19]	x3 [13]	[2]

	SCALANCE XB08	6GK5 008 0BA00 1AB2	SCALANCE XB08	SIEMENS
	6ES7 241-1AH30-0XB0	N/A	CM1241(RS232)	SIEMENS
	6ES7 215-1HG40-0XB0	N/A	CPU 1215C DC/DC/Rly	SIEMENS
	6ES7 223-1PL32-0XB0	N/A	SM1223 D1I16/DQ16 Relay	SIEMENS
			MOXA Nport IA5-250A	
AK3	OW5669.12/983/61	RT 78626	RELAY	SHRACK

LT-EL-BL-EI-PPS-1180-91

LT-EL-BL-EI (DRAWING DIRECTORY)	LT-EL-BL-EI-PPS-1180-91 (DRAWING NUMBER)	A (REV)
COMPUTER REPRODUCIBLE	SCALE: N/A	SHEET 34 OF 36

REV	DESCRIPTION	DATE	BY	CHECKED	APP
	SEE SHEET 1				

COLOR	PROD #	TYPE
[1]	3044636	Double-level terminal block - UTTB 2,5
[2]	3044092	GROUND
[3]	3047293	End cover - D-UTTB 2,5/4
[4]	3047303	Spacer plate - DP-UTTB 2,5/4
[5]	1201413	End clamp - E/UK 1
[6]	EPDDFL4U	End Plate; Term Blk; DIN Rail; Gray;
[7]	3044542	DIN Rail Terminal Blocks UT 2 5/4-QUATTRO
[8]	DDFL-4U	24V FUSES
[9]	3044076	Feed-through terminal block - UT 2,5
[10]	3047028	End cover - D-UT 2,5/10
[11]	3047170	End cover - D-UT 2,5/4-QUATTRO
[12]	3044102	Feed-through terminal block - UT 4
[13]	2775016	Feed-through terminal block - UDK 4
[14]	KN-TL-14	KONNECT IT 3 CIRCUIT TERMINAL BLOCK
[15]	KN-EC-TL	3 CIRCUIT TERMINAL BLOCK COVER
[16]	CDL4U(E)DD2	99321 ALTECH DIODE TERMINAL BLOCK
[17]	EPCDL4U	ALTECH DIODE TB END COVER
[18]	3044636	Diode TB - UTTB 2,5 O-UL/UR-UL
[19]	2775113	D-UDK4 END COVER

[1] & [18] are the same part except [18] has been modified with diodes.

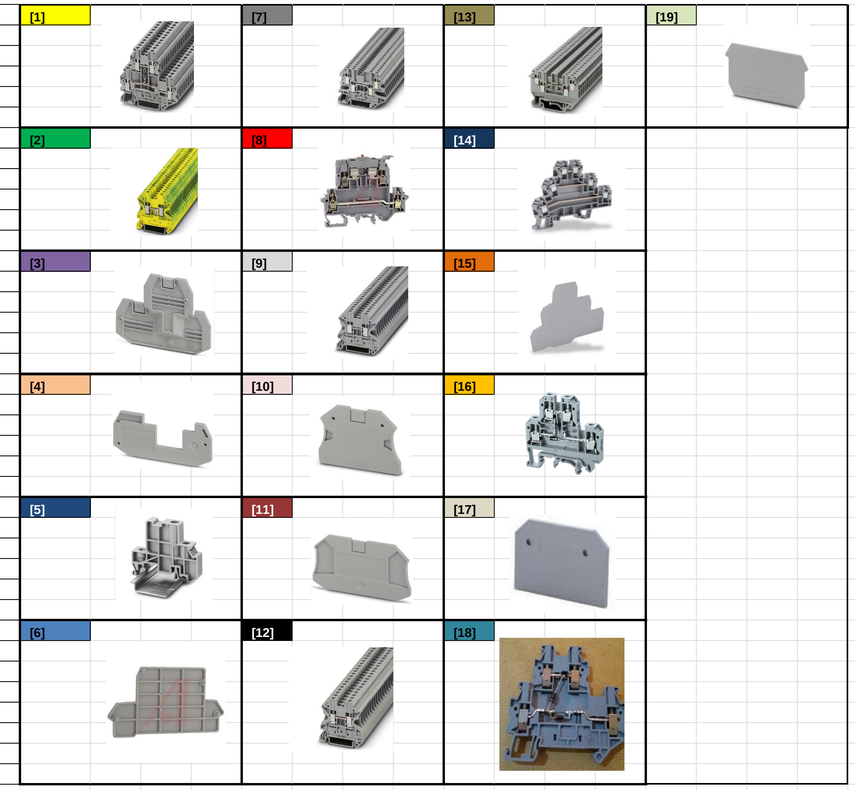

Paired part numbers are color coordinated.

REV	DESCRIPTION	DATE	BY	CHECKED	APP
	SEE SHEET 1				

18-ID FOE CABLE LIST

Cable Num.	CHAIN	From LOCATION	To LOCATION	Conductors Needed
ID18FOE-1-A	A	FOE	CS1 Emergency stop	6
ID18FOE-1-B	B	FOE	CS1 (Emergency stop/SB1/LED)	8
ID18FOE-2-A	A	FOE	CS2 Emergency stop	6
ID18FOE-2-B	B	FOE	CS2 (Emergency stop/SB2/LED)	8
ID18FOE-3-A	A	FOE	CS3 Emergency stop	6
ID18FOE-3-B	B	FOE	CS3 (Emergency stop/SB3/LED)	8
ID18FOE-4-A	A	FOE	Emergency Access E-Stop	6
ID18FOE-4-B	B	FOE	Emergency Access E-Stop	6
ID18FOE-5-A	A	FOE	FRONT Left & Right Door Switches	8
ID18FOE-5-B	B	FOE	FRONT Left & Right Door Switches	8
ID18FOE-6-A	A	FOE	Water Box Power A	2
ID18FOE-6-B	B	FOE	Water Box Power B	2
ID18FOE-7-A	A	FOE	PPS Water Interlock A (Channels 1&2)	8
ID18FOE-7-B	B	FOE	PPS Water Interlock B (Channels 1&2)	8
ID18FOE-8-A	A	FOE	Photon shutter A L1S1 Proximity sensor, OPEN and Closed Switch	6
ID18FOE-8-B	B	FOE	Photon shutter B L1S1 Proximity sensor, OPEN and Closed Switch	6
ID18FOE-9-A	A	FOE	FRONT Left Mag Lock Switch/Coil	4
ID18FOE-9-B	B	FOE	FRONT Left REED Switch(In Maglock)	2
ID18FOE-10-A	A	FOE	FRONT Right Mag Lock Switch/Coil	4
ID18FOE-10-B	B	FOE	FRONT Right REED Switch(In Maglock)	2
ID18FOE-11-A	A	FOE	Access Btn To Chain	2
ID18FOE-11-B	B	FOE	CSE Btn & LED	4
ID18FOE-12-A	A	FOE	SPARE	
ID18FOE-12-B	B	FOE	OverHead Lights	2
ID18FOE-13-A	A	FOE	FOE A Chain Interlock, Entry Permit, Beam On Signs	6
ID18FOE-13-B	B	FOE	FOE B Chain Interlock, Entry Permit, Beam On Signs	6
ID18FOE-14-A	A	FOE	Beam Imminent Beacon & Sounder	4
ID18FOE-14-B	B	FOE	Search Sounder	2
ID18FOE-15-A	A	FOE	Photon shutter L1A1 solenoid	2
ID18FOE-15-B	B	FOE	Photon shutter L1B1 solenoid	2
ID18FOE-16-A	A	FOE	Door Opener Inhibit to Door Controller +SPARE	4
ID18FOE-16-B	B	FOE	SPARE	
ID18FOE-17-A	A	FOE	SPARE	
ID18FOE-17 -B	B	FOE	SPARE	
ID18FOE-18-A	A	FOE	SPARE	
ID18FOE-18-B	B	FOE	SPARE	
ID18FOE-19-A	A	FOE	SPARE	
ID18FOE-19-B	B	FOE	SPARE	
ID18FOE-40-A	A	FOE	Storage Ring PPS IO BOX	39
ID18FOE-40-B	B	FOE	Storage Ring PPS IO BOX	39
SPARE				
ID18EPS-1		EPS	Photon shutter L1A1 Open/Closed switches for EPS	4
ID18EPS-2		EPS	Photon shutter L1B1 Open/Closed switches for EPS	4
ID18EPS-3		EPS	Experimenter Bypass to GV2 +SPARE	4
ID18EPS-4		EPS	SPARE	
ID18EPS-5		EPS	SPARE	
ID18EPS-6		EPS	SPARE	
COMMUNICATION CABLES				
ID18-ETH-A09	A	FOE-AUX I/O	ETHERNET CABLE FROM FOE TO AUX BOX EPS	
ID18-ETH-A8	B	FOE-AUX I/O	ETHERNET CABLE FROM FOE TO AUX BOX B CHAIN	
ID18-PB-A01	A	FOE-AUX I/O	ProfiBus Cable from FOE to AUX BOX A CHAIN	
POWER CABLES				
	A	Mezzanine I/O BOX-FOE	10/3 POWER A	
	B	Mezzanine I/O BOX-FOE	10/3 POWER B	
	A	FOE-B BOX	10/3 POWER A	
	B	FOE-B BOX	10/3 POWER B	

LT-EL-BL-EI-PPS-1180-91

LT-EL-BL-EI	LT-EL-BL-EI-PPS-1180-91	A
DRAWING DIRECTORY	DRAWING NUMBER	REV
COMPUTER REPRODUCIBLE	SCALE: N/A	SHEET 36 OF 36

REV	DESCRIPTION	DATE	BY	CHECKED	APP
A	INITIAL RELEASE	10/03/2017	SEJ	JM	AC

WATER FLOW INTERLOCK CHANNEL 1 A CHAIN

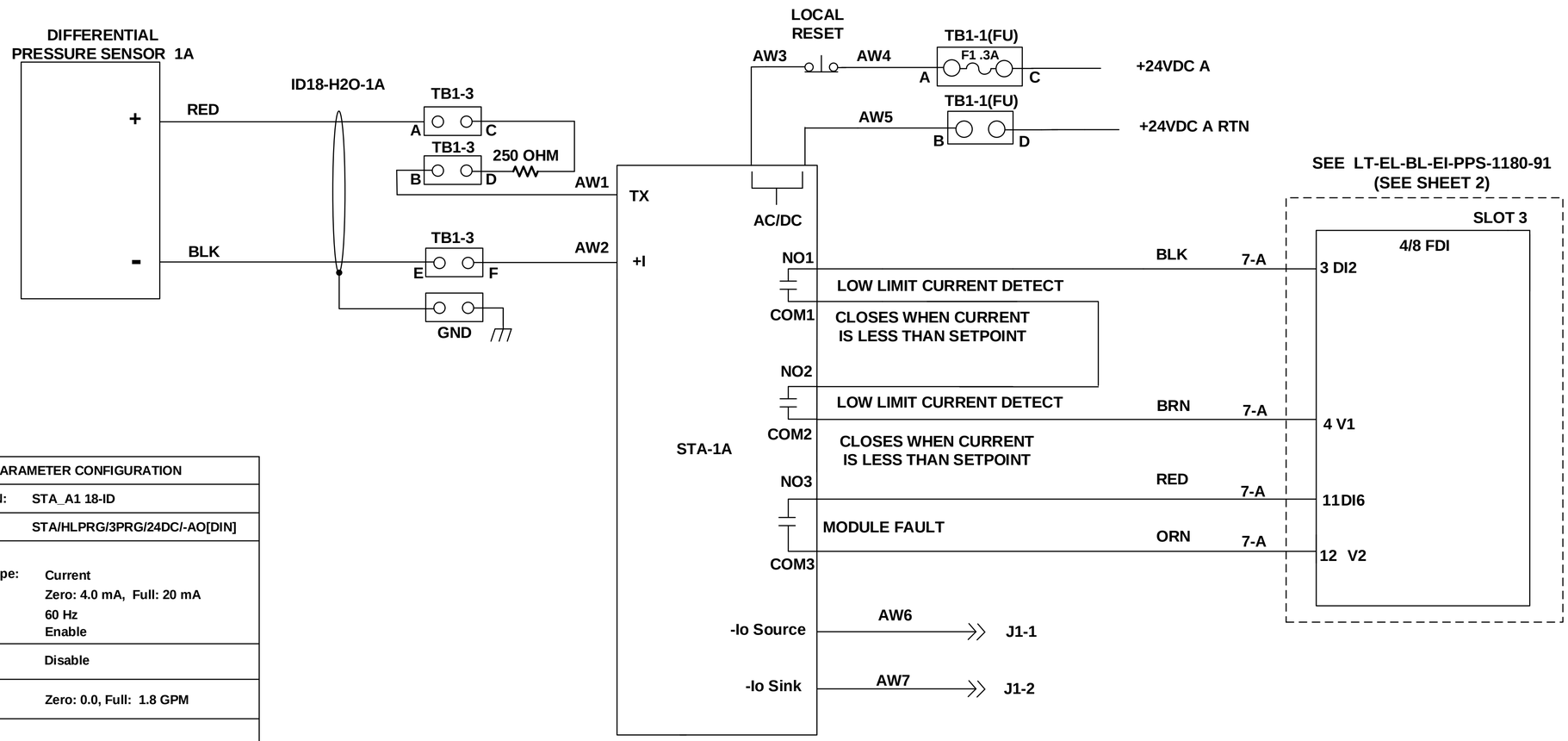

STA DEVICE PARAMETER CONFIGURATION		
DEVICE NAME / LOCATION:	STA_A1 18-ID	
MODEL :	STA/HLPRG/3PRG/24DC/-AO[DIN]	
INPUT		
Measurement Type:	Current	
Input Range:	Zero: 4.0 mA, Full: 20 mA	
Filter Settings:	60 Hz	
Broken wire:	Enable	
TRIMMING	Disable	
SCALING	Zero: 0.0, Full: 1.8 GPM	
DISPLAY		
Display Source:	Process Variable (PV)	
Precision:	Auto	
ALARMS	ALARM 1	ALARM 2
Mode:	Low Trip	Hi Trip
Latching:	Off	Off
Trip point:	1.3 GPM	0.0 GPM
Dead Band:	0.0 GPM	0.0 GPM
Delay:	0 s	0 s
ANALOG OUTPUT		
Mode:	Current	
Fail mode:	Fail Low	
AO Range:	Zero: 4.0, Full: 20.0 mA	
Damping:	Disable (0.0 s)	

A

LT-EL-BL-EI-PPS-1180-92

BROOKHAVEN NATIONAL LABORATORY

BROOKHAVEN NATIONAL LABORATORY
BROOKHAVEN SCIENCE ASSOCIATES
UPTON, NEW YORK 11973
Exploring Life's Mysteries, Protecting its Future

NSLS II NATIONAL SYNCHROTRON LIGHT SOURCE II

UNLESS OTHERWISE SPECIFIED
INTEGER TOLERANCES ± .06
DECIMAL TOLERANCES
.X ± .030
.XX ± .015
.XXX ± .010
ANGULAR TOLERANCE ± 0.5°
UNSPECIFIED RADII .02 MAX
125 BREAK SHARP CORNERS AND EDGES
FINISH MAX .03 MIN .005

UNLESS OTHERWISE SPECIFIED DIMENSIONS ARE IN INCHES DIMENSIONS IN [; **] ARE MILLIMETERS EQUIV. FOR REF. ONLY
INTERPRET DRAWING AS PER ANSI Y14.5 OR Y32.2
ESH&Q RISK LEVEL A-1
OUTSTANDING ECN'S

		DATE
DRWN BY	S. JARZABKOWSKI	10/03/2017
CHK BY	J. MALLEY	10/04/2017
ENG APP	S. BUDA	10/03/2017
SUPV APP	G. GANETIS	10/04/2017
QA APP	E. CHESWICK	10/03/2017
ESH APP	R. LEE	10/04/2017

WIRING DIAGRAM,
18-ID – H20 (FXI-H2O)
A CHAIN AND B CHAIN

DRAWING DIRECTORY	DRAWING NUMBER	REV
LT-EL-BL-EI	LT-EL-BL-EI-PPS-1180-92	A

COMPUTER REPRODUCIBLE | SCALE: N/A | SHEET 1 OF 6

JOB NUMBER	USED ON DWG. NO.

REV	DESCRIPTION	DATE	BY	CHECKED	APP
	SEE SHEET 1				

WATER FLOW INTERLOCK CHANNEL 1 B CHAIN

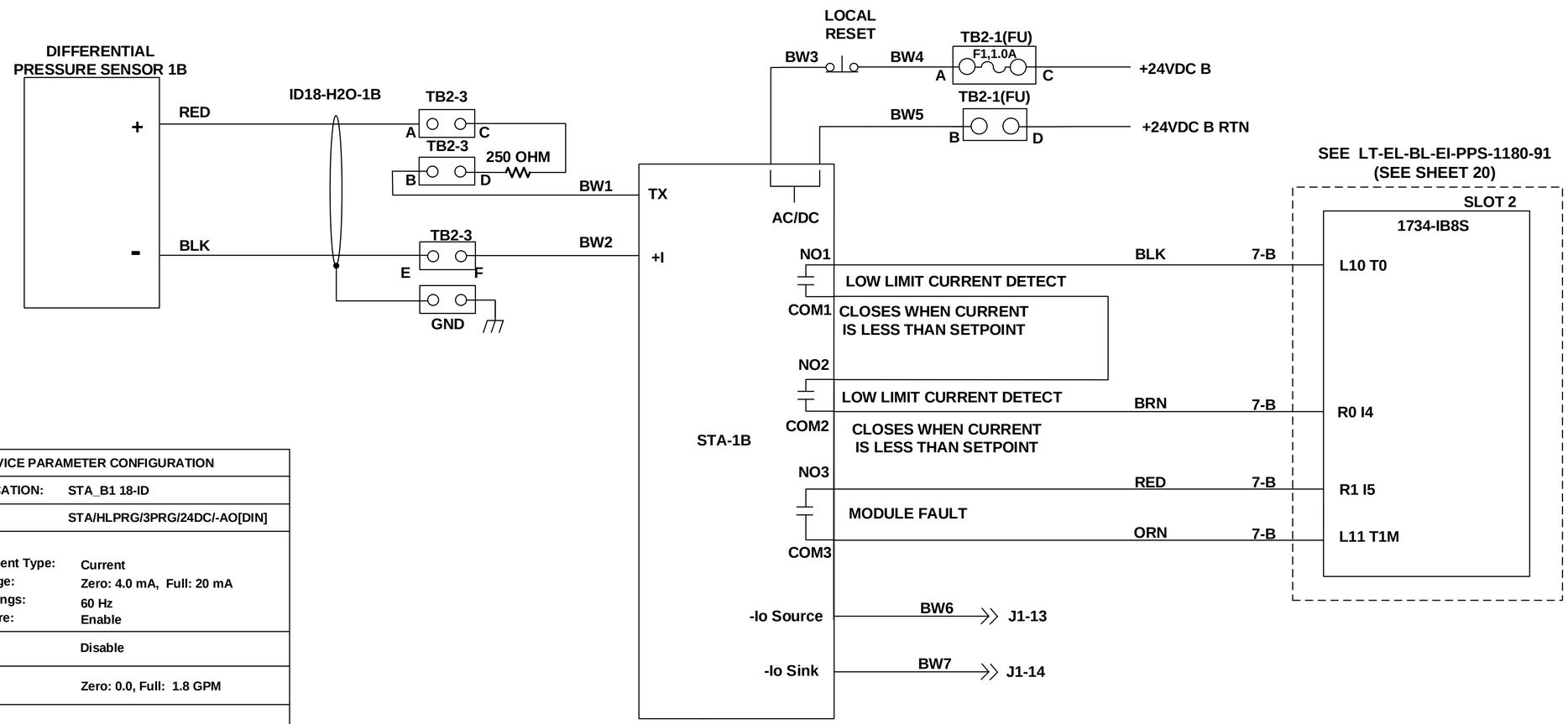

STA DEVICE PARAMETER CONFIGURATION		
DEVICE NAME / LOCATION:	STA_B1 18-ID	
MODEL :	STA/HLPRG/3PRG/24DC/-AO[DIN]	
INPUT		
Measurement Type:	Current	
Input Range:	Zero: 4.0 mA, Full: 20 mA	
Filter Settings:	60 Hz	
Broken wire:	Enable	
TRIMMING	Disable	
SCALING	Zero: 0.0, Full: 1.8 GPM	
DISPLAY		
Display Source:	Process Variable (PV)	
Precision:	Auto	
ALARMS	ALARM 1	ALARM 2
Mode:	Low Trip	Hi Trip
Latching:	Off	Off
Trip point:	1.3 GPM	0.0 GPM
Dead Band:	0.0 GPM	0.0 GPM
Delay:	0 s	0 s
ANALOG OUTPUT		
Mode:	Current	
Fail mode:	Fail Low	
AO Range:	Zero: 4.0, Full: 20.0 mA	
Damping:	Disable (0.0 s)	

B

LT-EL-BL-EI-PPS-1180-92

LT-EL-BL-EI (DRAWING DIRECTORY)	LT-EL-BL-EI-PPS-1180-92 (DRAWING NUMBER)	A (REV)
COMPUTER REPRODUCIBLE	SCALE: N/A	SHEET 2 OF 6

REV	DESCRIPTION	DATE	BY	CHECKED	APP
	SEE SHEET 1				

A CHAIN

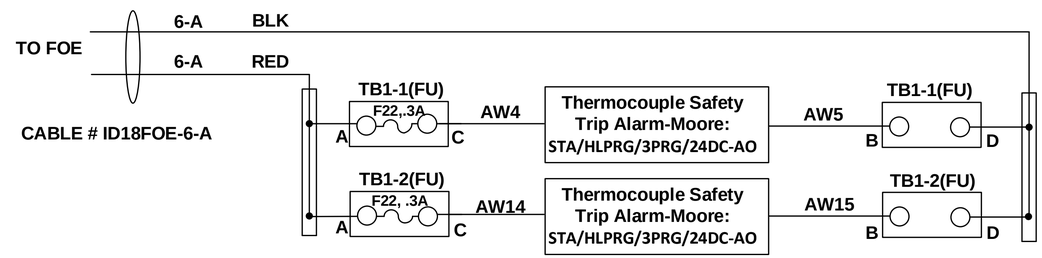

B CHAIN

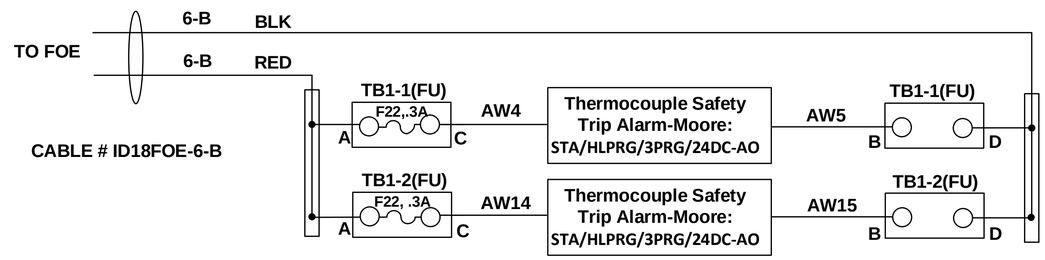

NOTES:

1. TB1-1 TO TB1-2 ARE JUMPED TOGETHER.
2. TB2-1 TO TB2-2 ARE JUMPED TOGETHER.

REV	DESCRIPTION	DATE	BY	CHECKED	APP
	SEE SHEET 1				

Row 1

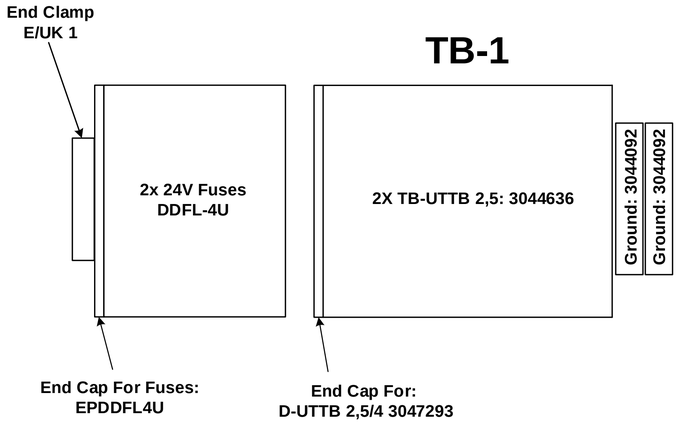

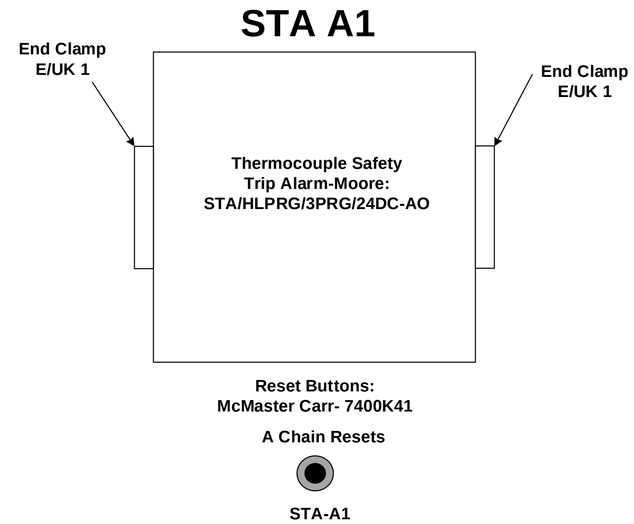

Row 2

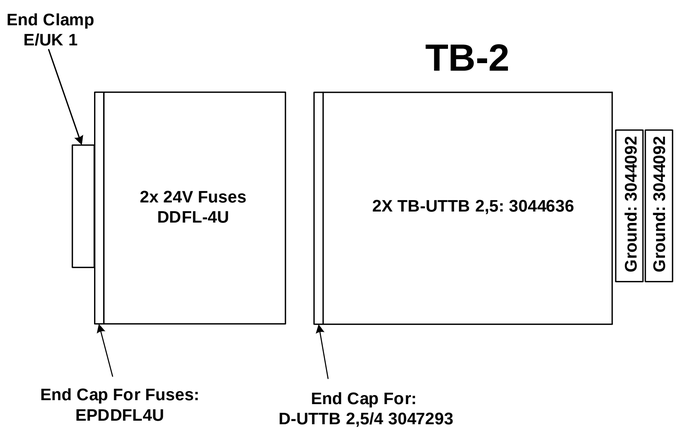

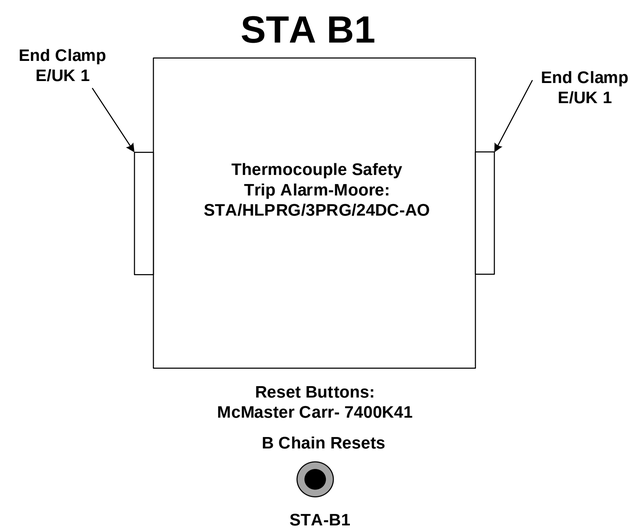

LT-EL-BL-EI-PPS-1180-92

LT-EL-BL-EI	LT-EL-BL-EI-PPS-1180-92	A
DRAWING DIRECTORY	DRAWING NUMBER	REV
COMPUTER REPRODUCIBLE	SCALE: N/A	SHEET 4 OF 6

REV	DESCRIPTION	DATE	BY	CHECKED	APP
	SEE SHEET 1				

ROW 1:						
SLOT	MODULE	SOCKET	DESCRIPTION	VENDOR		
	6ES7-151-1BA02-0AB0	N/A	IM 151	SIEMENS		
1	6ES7-138-4CA50-0AB0	6ES7-193-4CC20-0AA0	POWER MODULE PM-E	SIEMENS		
2	6ES7-138-4FA04-0AB0	6ES7-193-4CF40-0AA0	4/8 FDI 8 SAFE IN	SIEMENS		
3	6ES7-138-4FA04-0AB0	6ES7-193-4CF40-0AA0	4/8 FDI 8 SAFE IN	SIEMENS		
STA A1	STA/HLPRG/3PRG/24DC-AO [DIN]	N/A	THERMOCOUPLE SAFETY TRIP ALARM	MOORE		
STA A2	STA/HLPRG/3PRG/24DC-AO [DIN]	N/A	THERMOCOUPLE SAFETY TRIP ALARM	MOORE		
STA A3	STA/HLPRG/3PRG/24DC-AO [DIN]	N/A	THERMOCOUPLE SAFETY TRIP ALARM	MOORE		
STA A4	STA/HLPRG/3PRG/24DC-AO [DIN]	N/A	THERMOCOUPLE SAFETY TRIP ALARM	MOORE		
STA A5	STA/HLPRG/3PRG/24DC-AO [DIN]	N/A	THERMOCOUPLE SAFETY TRIP ALARM	MOORE		
ROW 2:						
TB1	[6]	1>6 [8]	[3]	[1]	[2]	
BUTTON	COMPONENT		DESCRIPTION	VENDOR		
1	7400K41		POWER DISTRIBUTION BLOCK A	MCMASTER		
2	7400K41		POWER DISTRIBUTION BLOCK A	MCMASTER		
3	7400K41		POWER DISTRIBUTION BLOCK A	MCMASTER		
4	7400K41		POWER DISTRIBUTION BLOCK A	MCMASTER		
5	7400K41		POWER DISTRIBUTION BLOCK A	MCMASTER		
6	7400K41		POWER DISTRIBUTION BLOCK B	MCMASTER		
7	7400K41		POWER DISTRIBUTION BLOCK B	MCMASTER		
8	7400K41		POWER DISTRIBUTION BLOCK B	MCMASTER		
9	7400K41		POWER DISTRIBUTION BLOCK B	MCMASTER		
10	7400K41		POWER DISTRIBUTION BLOCK B	MCMASTER		
TB2	[[6]	[8]	[3]	[1]	[2]	
ROW 3:						
SLOT	MODULE	SOCKET	DESCRIPTION	VENDOR		
1	1734-AENTR	N/A	24V DC EHTERNET ADAPTER	AB		
2	1734-IB8S	1734-TOP 3	AB INPUT F 8 SAFETY IN	AB		
3	1734-IB8S	1734-TOP 3	AB INPUT F 8 SAFETY IN	AB		
STA B1	STA/HLPRG/3PRG/24DC-AO [DIN]	N/A	THERMOCOUPLE SAFETY TRIP ALARM	MOORE		
STA B2	STA/HLPRG/3PRG/24DC-AO [DIN]	N/A	THERMOCOUPLE SAFETY TRIP ALARM	MOORE		
STA B3	STA/HLPRG/3PRG/24DC-AO [DIN]	N/A	THERMOCOUPLE SAFETY TRIP ALARM	MOORE		
STA B4	STA/HLPRG/3PRG/24DC-AO [DIN]	N/A	THERMOCOUPLE SAFETY TRIP ALARM	MOORE		
STA B5	STA/HLPRG/3PRG/24DC-AO [DIN]	N/A	THERMOCOUPLE SAFETY TRIP ALARM	MOORE		

REV	DESCRIPTION	DATE	BY	CHECKED	APP
	SEE SHEET 1				

COLOR	PROD #	TYPE
[1]	3044636	Double-level terminal block - UTTB 2,5
[2]	3044092	GROUND
[3]	3047293	End cover - D-UTTB 2,5/4
[4]	3047303	Spacer plate - DP-UTTB 2,5/4
[5]	1201413	End clamp - E/UK 1
[6]	EPDDFL4U	End Plate; Term Blk; DIN Rail; Gray;
[7]	3044542	DIN Rail Terminal Blocks UT 2 5/4-QUATTRO
[8]	DDFL-4U	24V FUSES
[9]	3044076	Feed-through terminal block - UT 2,5
[10]	3047028	End cover - D-UT 2,5/10
[11]	3047170	End cover - D-UT 2,5/4-QUATTRO
[12]	3044102	Feed-through terminal block - UT 4
[13]	2775016	Feed-through terminal block - UDK 4
[14]	KN-TL-14	KONNECT IT 3 CIRCUIT TERMINAL BLOCK
[15]	KN-EC-TL	3 CIRCUIT TERMINAL BLOCK COVER
[16]	CDL4U(E)DD2	99321 ALTECH DIODE TERMINAL BLOCK
[17]	EPCDL4U	ALTECH DIODE TB END COVER
[18]	3044636	Diode TB - UTTB 2,5 O-UL/UR-UL

[1]

[7]

[13]

[2]

[8]

[14]

[3]

[9]

[15]

[4]

[10]

[16]
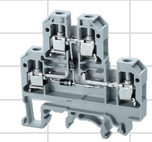

[5]

[11]

[17]

[6]

[12]

[18]
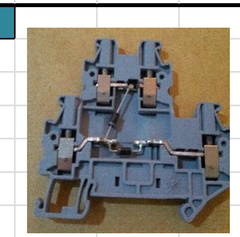

Paired part numbers are color coordinated.

LT-EL-BL-EI-PPS-1180-92

LT-EL-BL-EI (DRAWING DIRECTORY)	LT-EL-BL-EI-PPS-1180-92 (DRAWING NUMBER)	A (REV)
COMPUTER REPRODUCIBLE	SCALE: N/A	SHEET 6 OF 6

REV	DESCRIPTION	DATE	BY	CHECKED	APP
A	INITIAL RELEASE	10/03/2016	SEJ	JM	SB

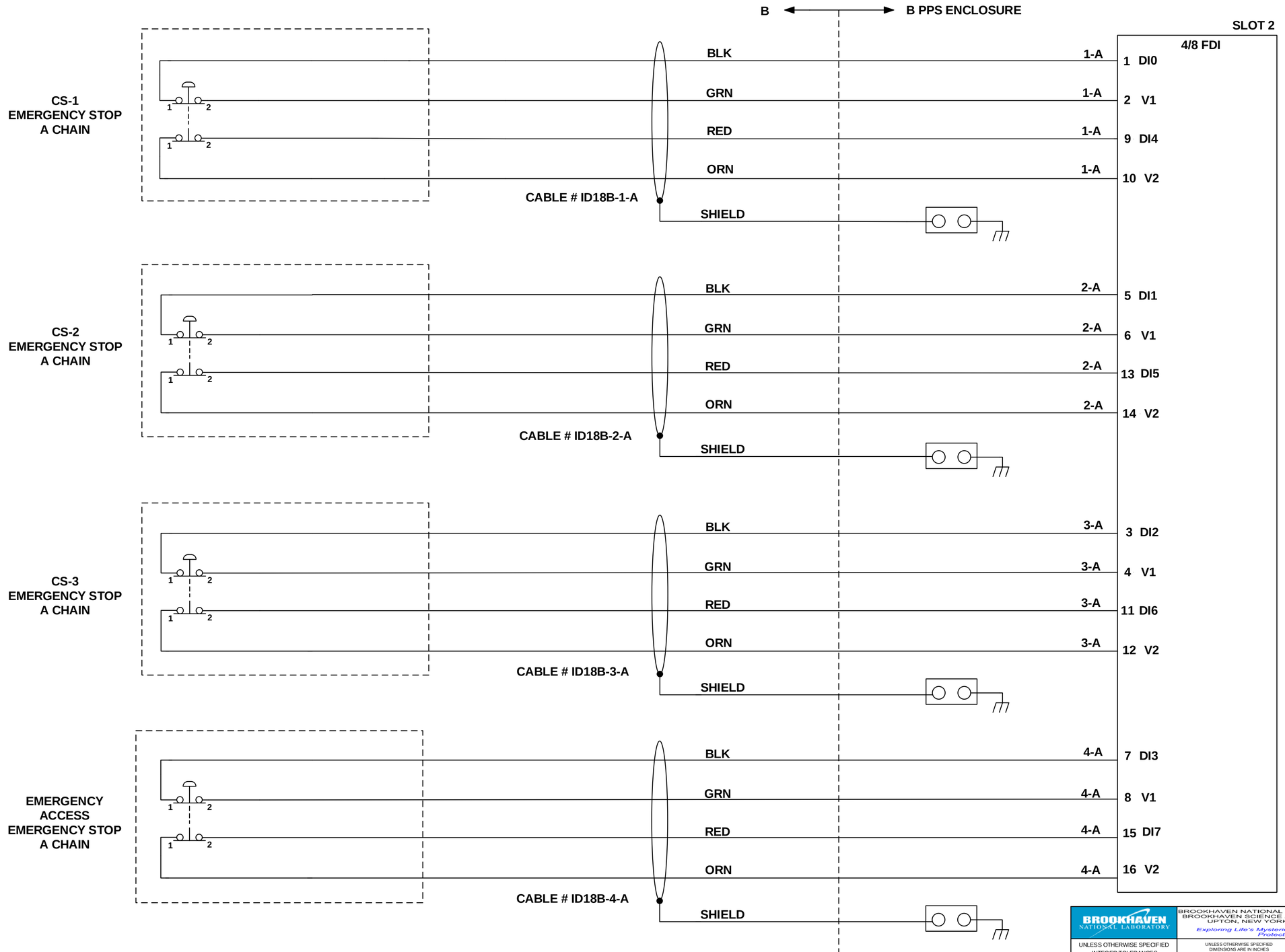

A

LT-EL-BL-EI-PPS-1180-93

BROOKHAVEN NATIONAL LABORATORY

BROOKHAVEN NATIONAL LABORATORY
BROOKHAVEN SCIENCE ASSOCIATES
UPTON, NEW YORK 11973
Exploring Life's Mysteries, Protecting its Future

NSLS II NATIONAL SYNCHROTRON LIGHT SOURCE II

UNLESS OTHERWISE SPECIFIED
INTEGER TOLERANCES ± .06
DECIMAL TOLERANCES
.X ± .030
.XX ± .015
.XXX ± .010
ANGULAR TOLERANCE ± 0.5°
UNSPECIFIED RADII .02 MAX
125 BREAK SHARP CORNERS AND EDGES
FINISH MAX .03 MIN .005

UNLESS OTHERWISE SPECIFIED DIMENSIONS ARE IN INCHES DIMENSIONS IN [ ] ARE MILLIMETERS EQUIV. FOR REF. ONLY

ESH&Q RISK LEVEL A-1

INTERPRET DRAWING AS PER ANSI Y14.5 OR Y32.2

		DATE	OUTSTANDING ECN'S
DRWN BY	S. JARZABKOWSKI	10/03/2017	
CHK BY	J.MALLEY	10/04/2017	
ENG APP	S. BUDA	10/03/2017	
SUPV APP	G. GANETIS	10/04/2017	
QA APP	E.CHESWICK	10/03/2017	
ESH APP	R. LEE	10/04/2017	

JOB NUMBER | USED ON DWG. NO.

WIRING DIAGRAM, 18-ID-B (FXI-B) A CHAIN AND B CHAIN

LT-EL-BL-EI — DRAWING DIRECTORY
LT-EL-BL-EI-PPS-1180-93 — DRAWING NUMBER
A — REV

COMPUTER REPRODUCABLE | SCALE: N/A | SHEET 1 OF 21

REV	DESCRIPTION	DATE	BY	CHECKED	APP
	SEE SHEET 1				

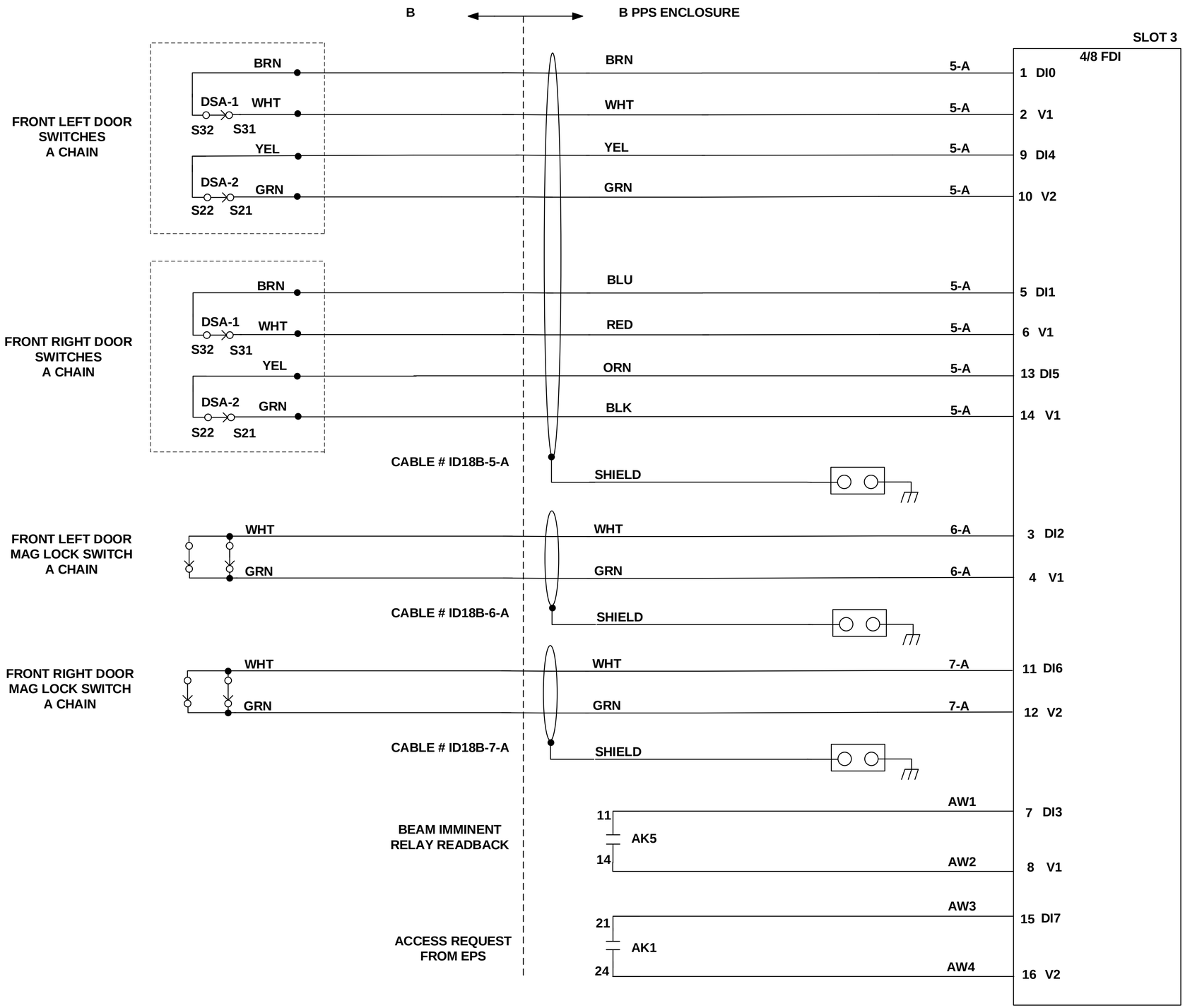

A

LT-EL-BL-EI (DRAWING DIRECTORY)	LT-EL-BL-EI-PPS-1180-93 (DRAWING NUMBER)	A (REV)
COMPUTER REPRODUCABLE	SCALE: N/A	SHEET 2 OF 21

LT-EL-BL-EI-PPS-1180-93

REV	DESCRIPTION	DATE	BY	CHECKED	APP
	SEE SHEET 1				

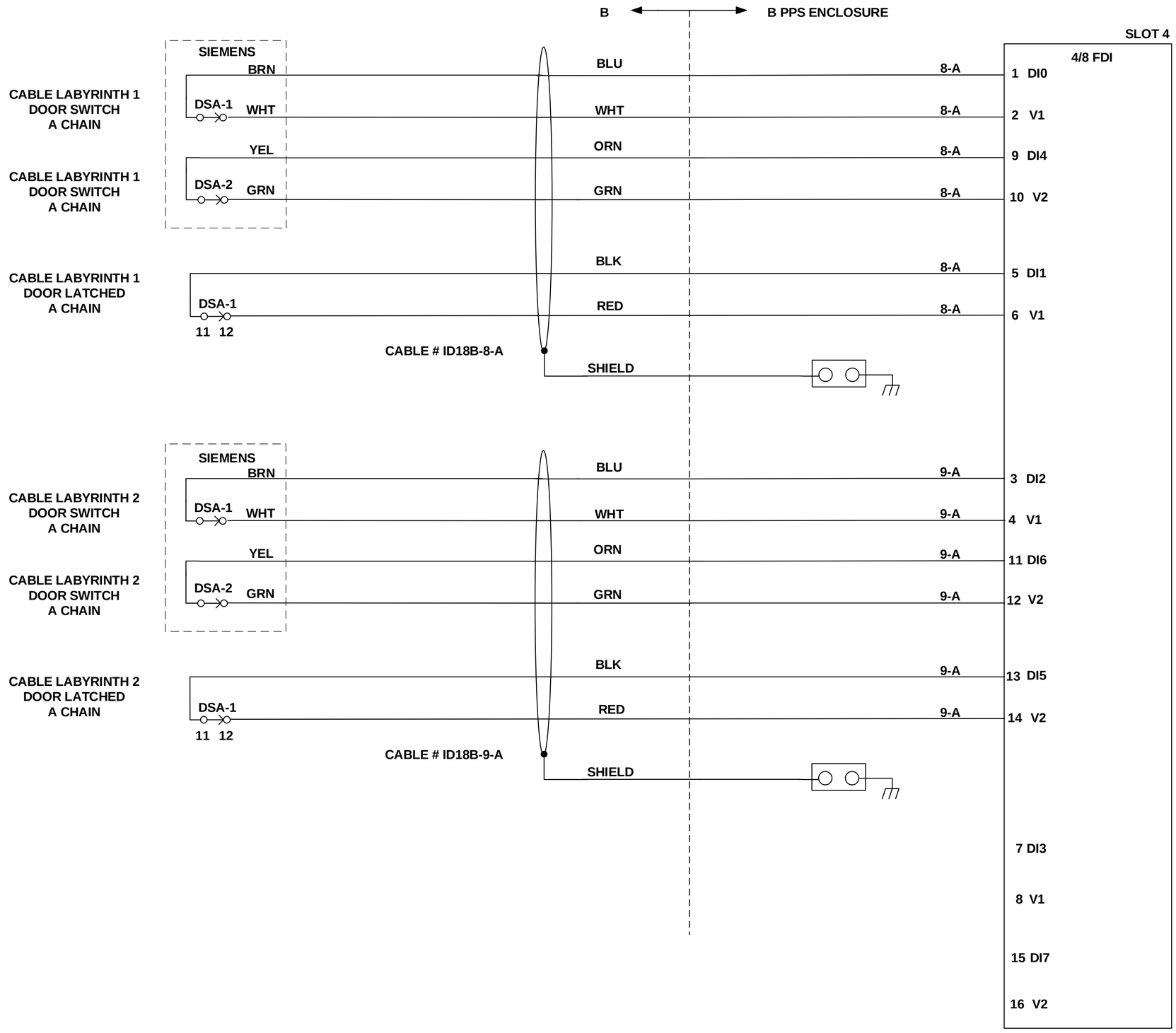

A

LT-EL-BL-EI	LT-EL-BL-EI-PPS-1180-93	A
DRAWING DIRECTORY	DRAWING NUMBER	REV

COMPUTER REPRODUCABLE | SCALE: N/A | SHEET 3 OF 21

LT-EL-BL-EI-PPS-1180-93

REV	DESCRIPTION	DATE	BY	CHECKED	APP
	SEE SHEET 1				

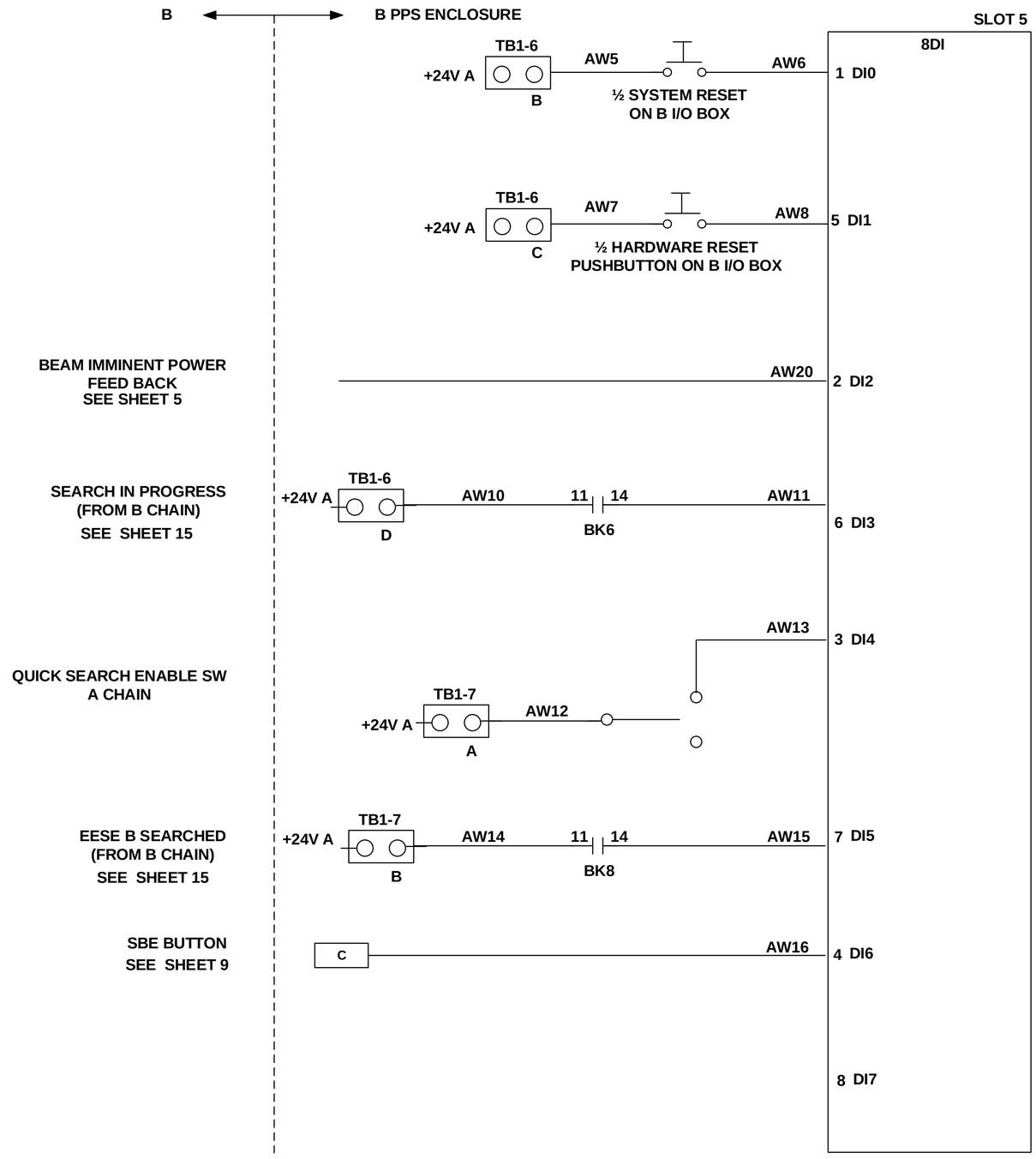

A

LT-EL-BL-EI DRAWING DIRECTORY	LT-EL-BL-EI-PPS-1180-93 DRAWING NUMBER	A REV
COMPUTER REPRODUCABLE	SCALE: N/A	SHEET 4 OF 21

LT-EL-BL-EI-PPS-1180-93

REV	DESCRIPTION	DATE	BY	CHECKED	APP
	SEE SHEET 1				

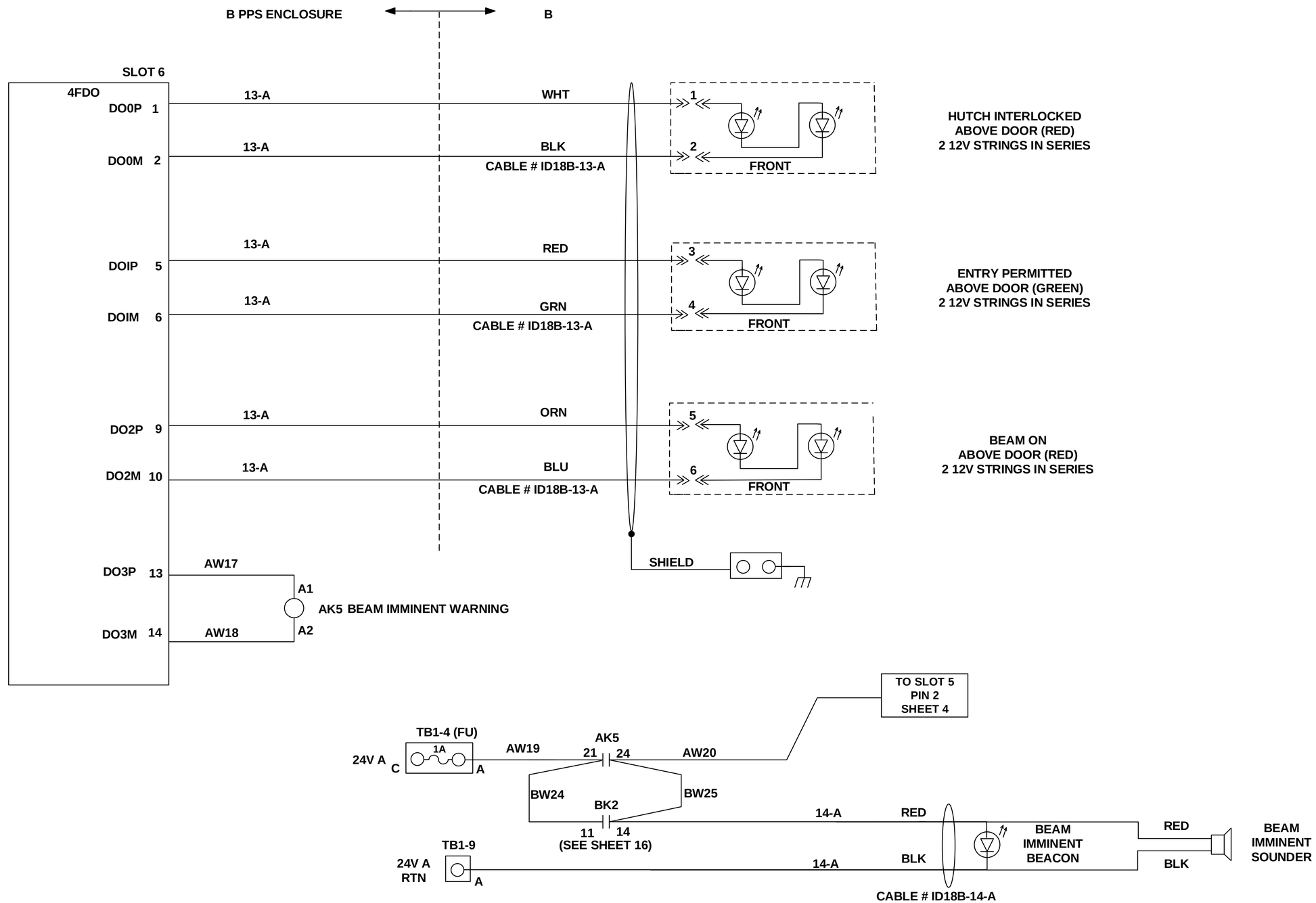

A

LT-EL-BL-EI (DRAWING DIRECTORY)	LT-EL-BL-EI-PPS-1180-93 (DRAWING NUMBER)	A (REV)
COMPUTER REPRODUCABLE	SCALE: N/A	SHEET 5 OF 21

LT-EL-BL-EI-PPS-1180-93

REV	DESCRIPTION	DATE	BY	CHECKED	APP
	SEE SHEET 1				

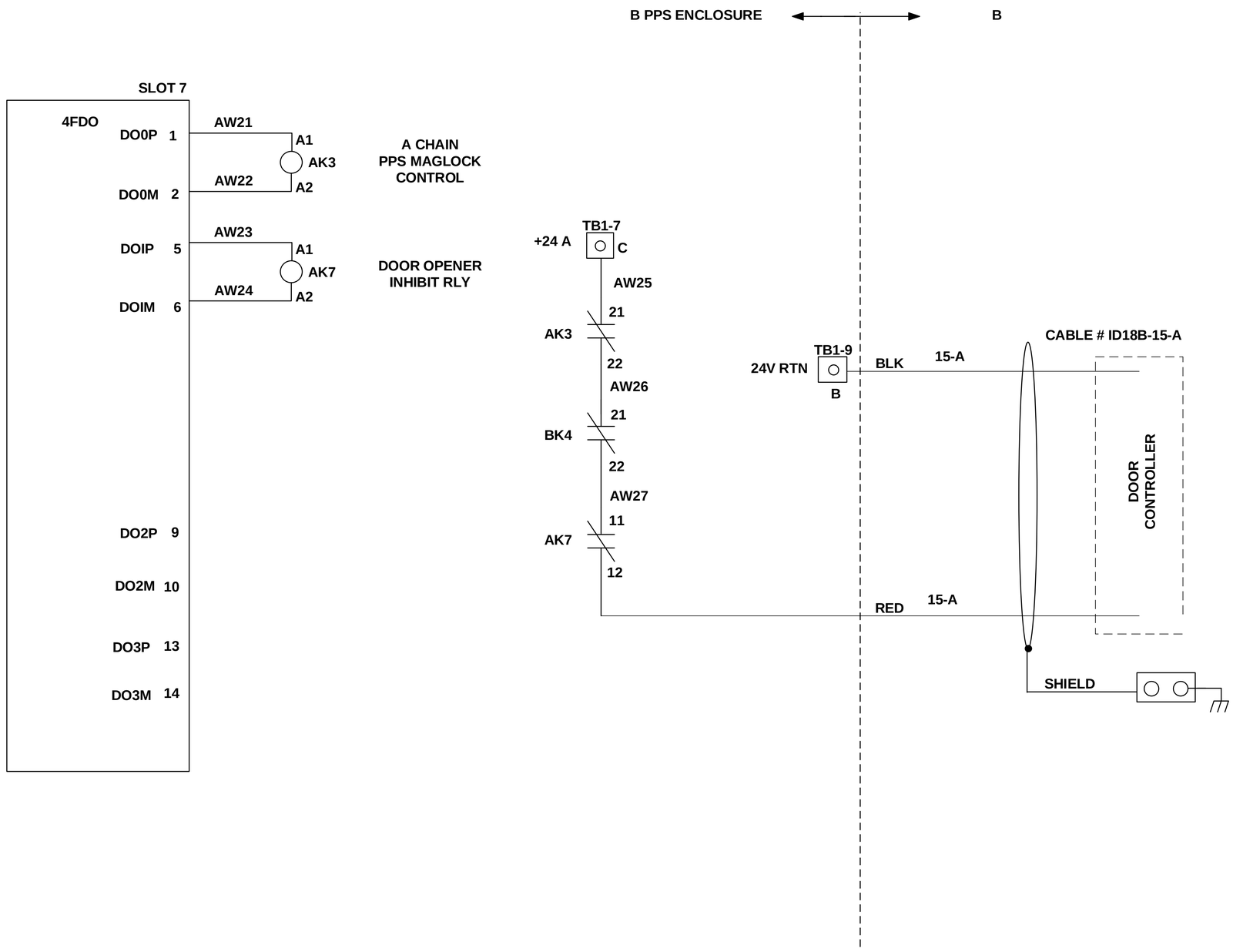

A

LT-EL-BL-EI DRAWING DIRECTORY	LT-EL-BL-EI-PPS-1180-93 DRAWING NUMBER	A REV
COMPUTER REPRODUCABLE	SCALE: N/A	SHEET 6 OF 21

LT-EL-BL-EI-PPS-1180-93

REV	DESCRIPTION	DATE	BY	CHECKED	APP
	SEE SHEET 1				

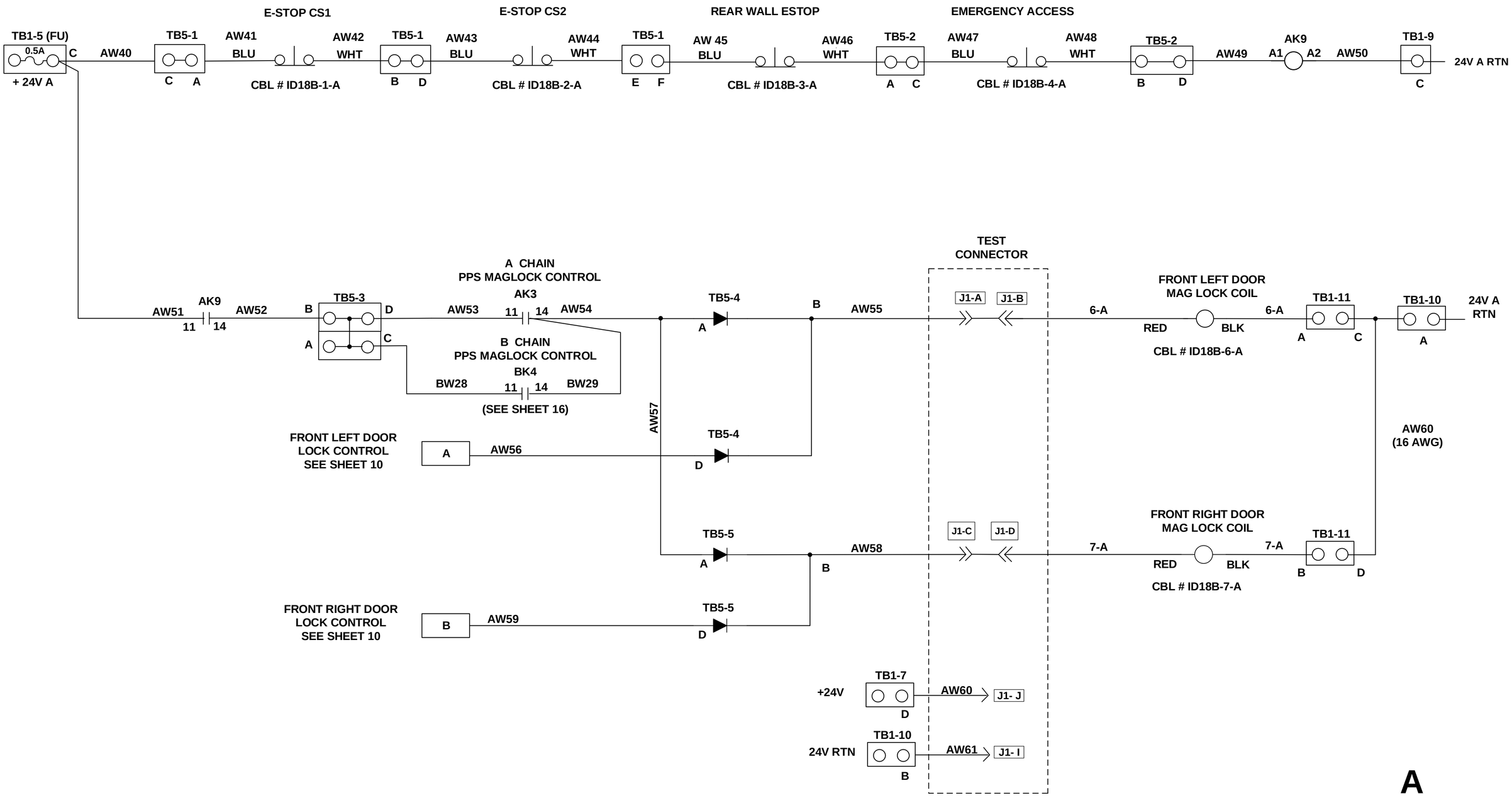

A

LT-EL-BL-EI	LT-EL-BL-EI-PPS-1180-93	A
DRAWING DIRECTORY	DRAWING NUMBER	REV
COMPUTER REPRODUCABLE	SCALE: N/A	SHEET 7 OF 21

LT-EL-BL-EI-PPS-1180-93

REV	DESCRIPTION	DATE	BY	CHECKED	APP
	SEE SHEET 1				

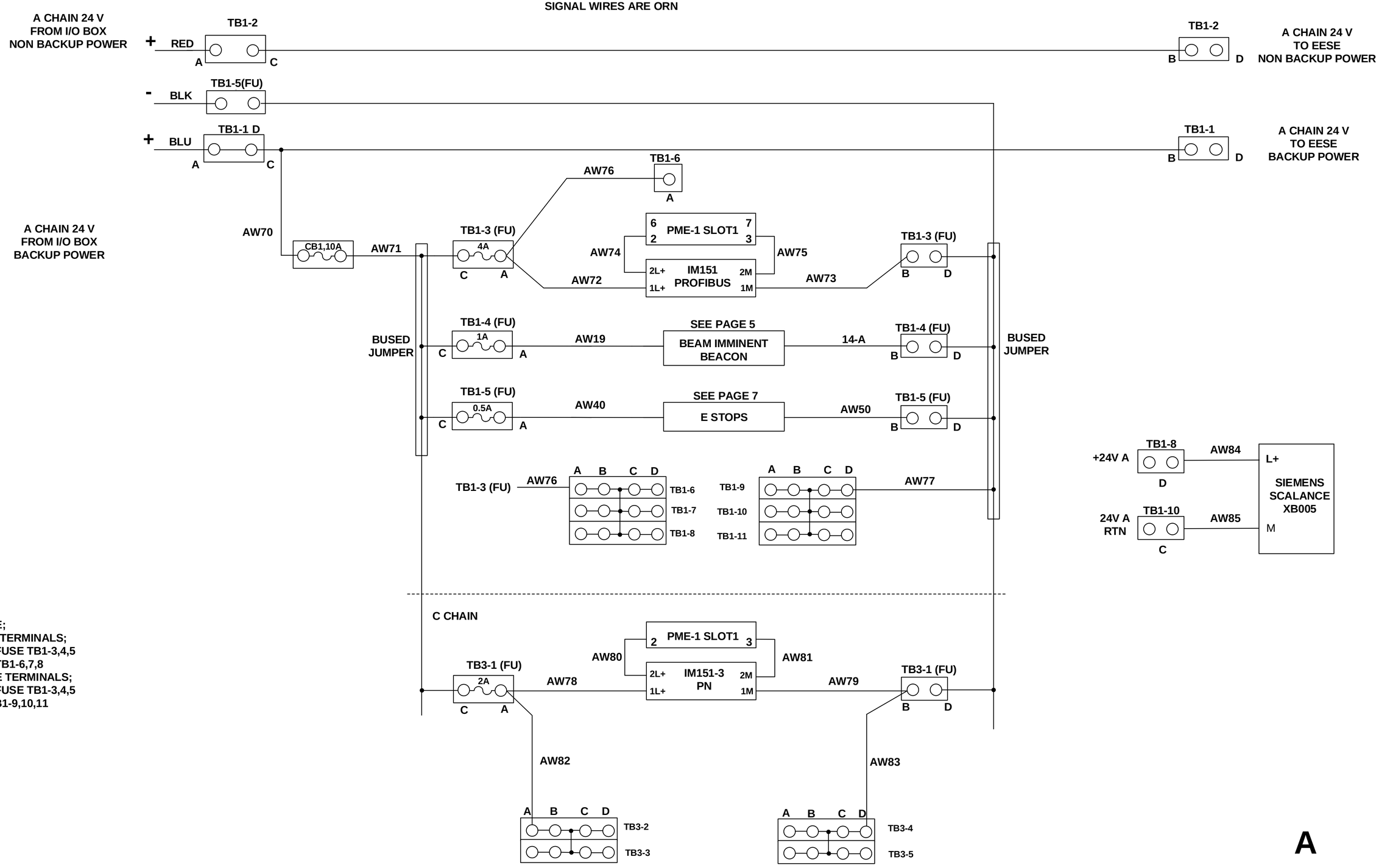

NOTES:
FU=FUSE;
POSITIVE TERMINALS;
1. JUMP FUSE TB1-3,4,5
2. JUMP TB1-6,7,8
NEGATIVE TERMINALS;
1. JUMP FUSE TB1-3,4,5
2. JUM TB1-9,10,11

A

LT-EL-BL-EI (DRAWING DIRECTORY)	LT-EL-BL-EI-PPS-1180-93 (DRAWING NUMBER)	A (REV)
COMPUTER REPRODUCABLE	SCALE: N/A	SHEET 8 OF 21

LT-EL-BL-EI-PPS-1180-93

REV	DESCRIPTION	DATE	BY	CHECKED	APP
	SEE SHEET 1				

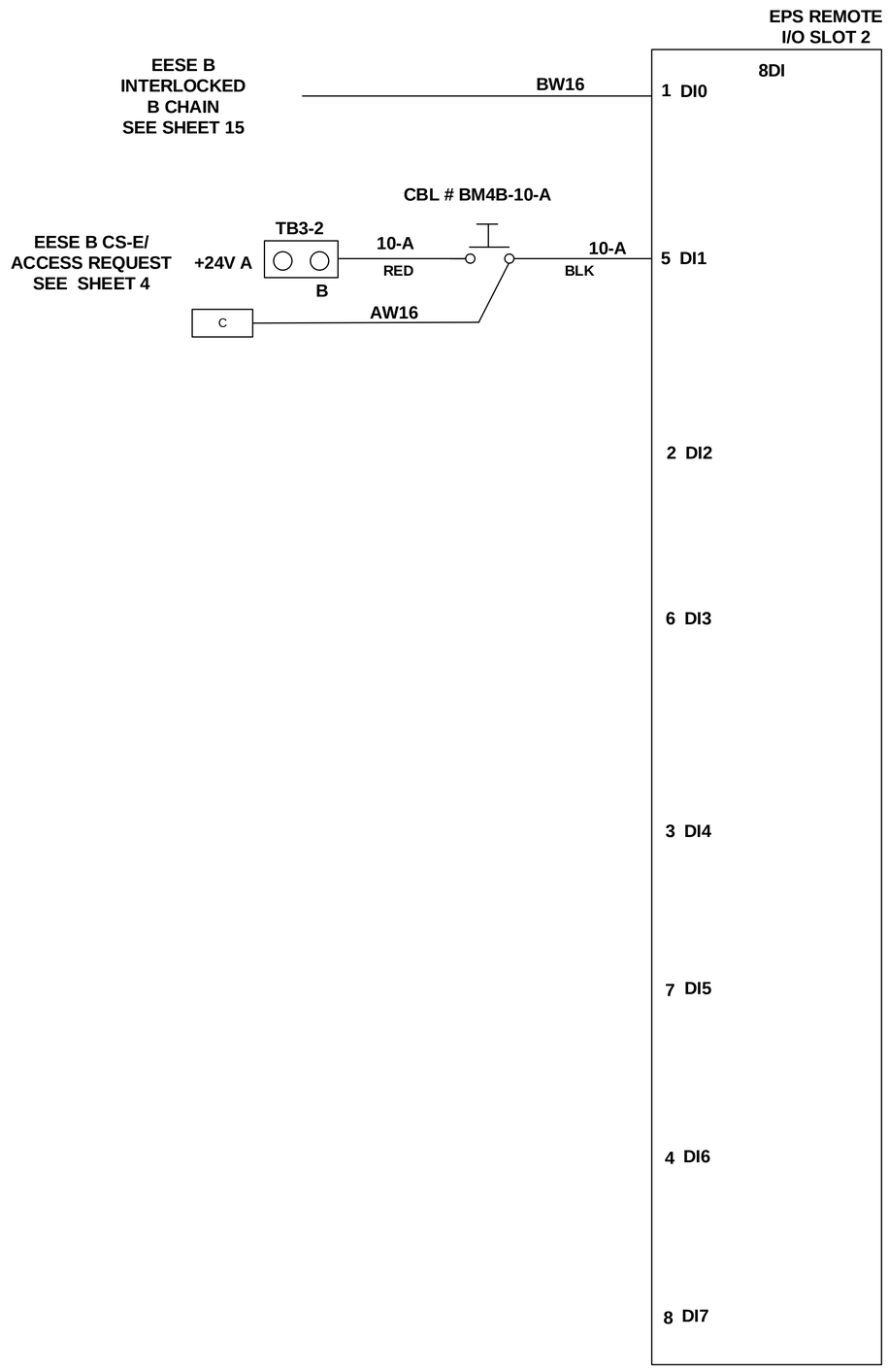

NOTES:
THE FOLLOWING A CHAIN SIGNALS ARE TRANSFERED TO THE C CHAIN VIA SOFTWARE;
1. EESE B INTERLOCKED
2. EESE B MAGLOCK SUM

A

LT-EL-BL-EI-PPS-1180-93

LT-EL-BL-EI (DRAWING DIRECTORY)	LT-EL-BL-EI-PPS-1180-93 (DRAWING NUMBER)	A (REV)
COMPUTER REPRODUCABLE	SCALE: N/A	SHEET 9 OF 21

REV	DESCRIPTION	DATE	BY	CHECKED	APP
	SEE SHEET 1				

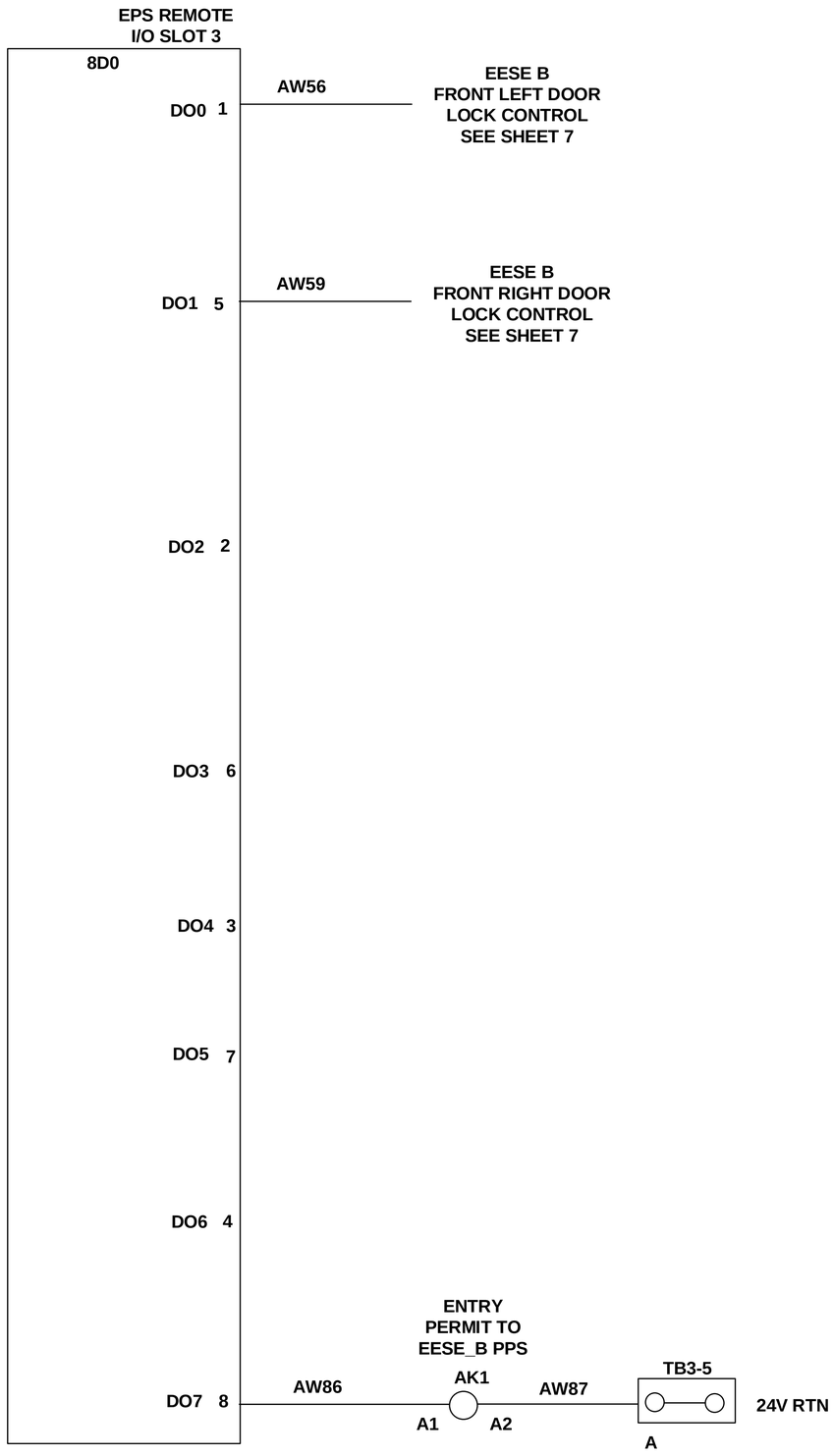

A

LT-EL-BL-EI DRAWING DIRECTORY	LT-EL-BL-EI-PPS-1180-93 DRAWING NUMBER	A REV
COMPUTER REPRODUCABLE	SCALE: N/A	SHEET 10 OF 21

LT-EL-BL-EI-PPS-1180-93

REV	DESCRIPTION	DATE	BY	CHECKED	APP
	SEE SHEET 1				

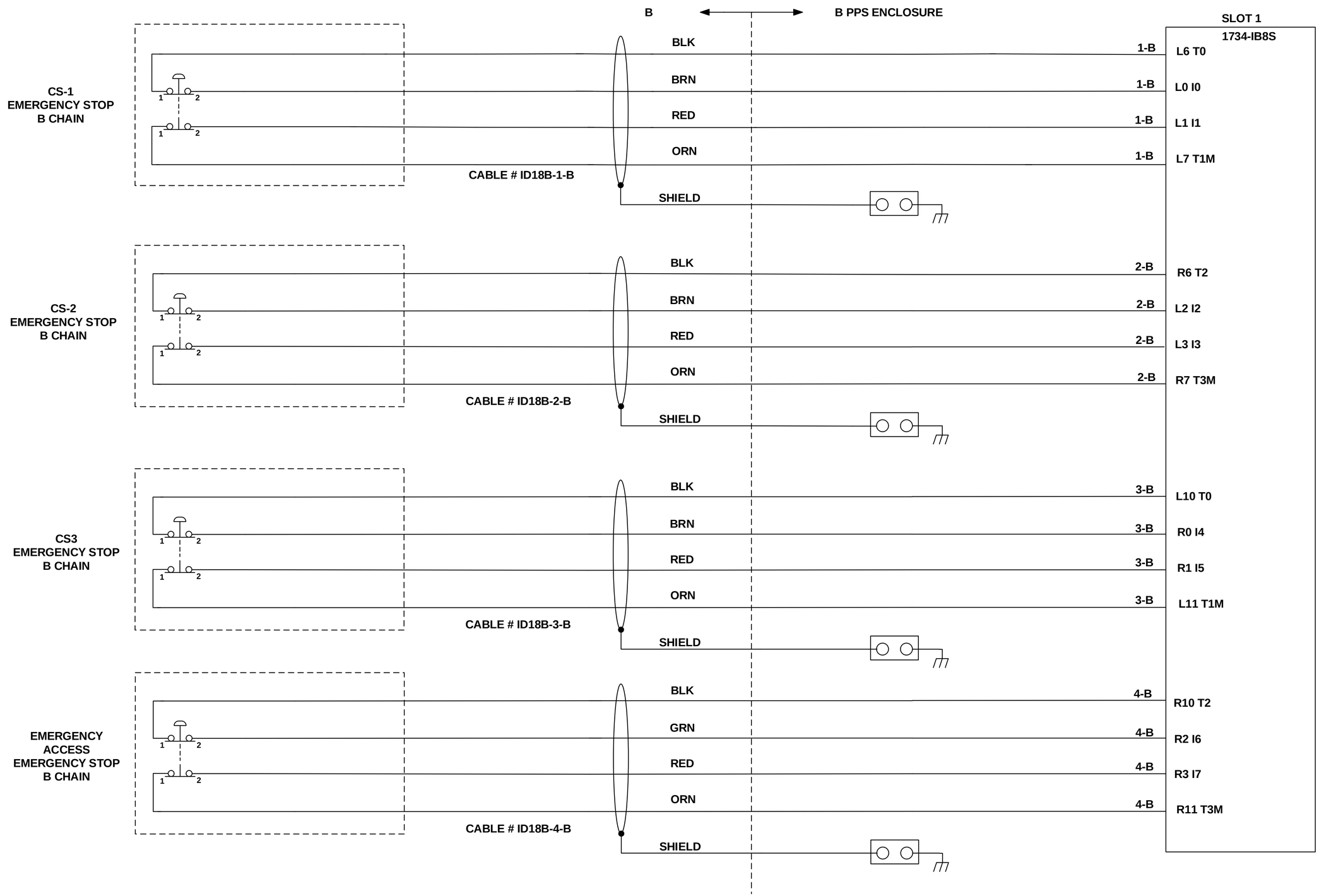

B

LT-EL-BL-EI-PPS-1180-93

LT-EL-BL-EI (DRAWING DIRECTORY)	LT-EL-BL-EI-PPS-1180-93 (DRAWING NUMBER)	A (REV)
COMPUTER REPRODUCABLE	SCALE: N/A	SHEET 11 OF 21

REV	DESCRIPTION	DATE	BY	CHECKED	APP
	SEE SHEET 1				

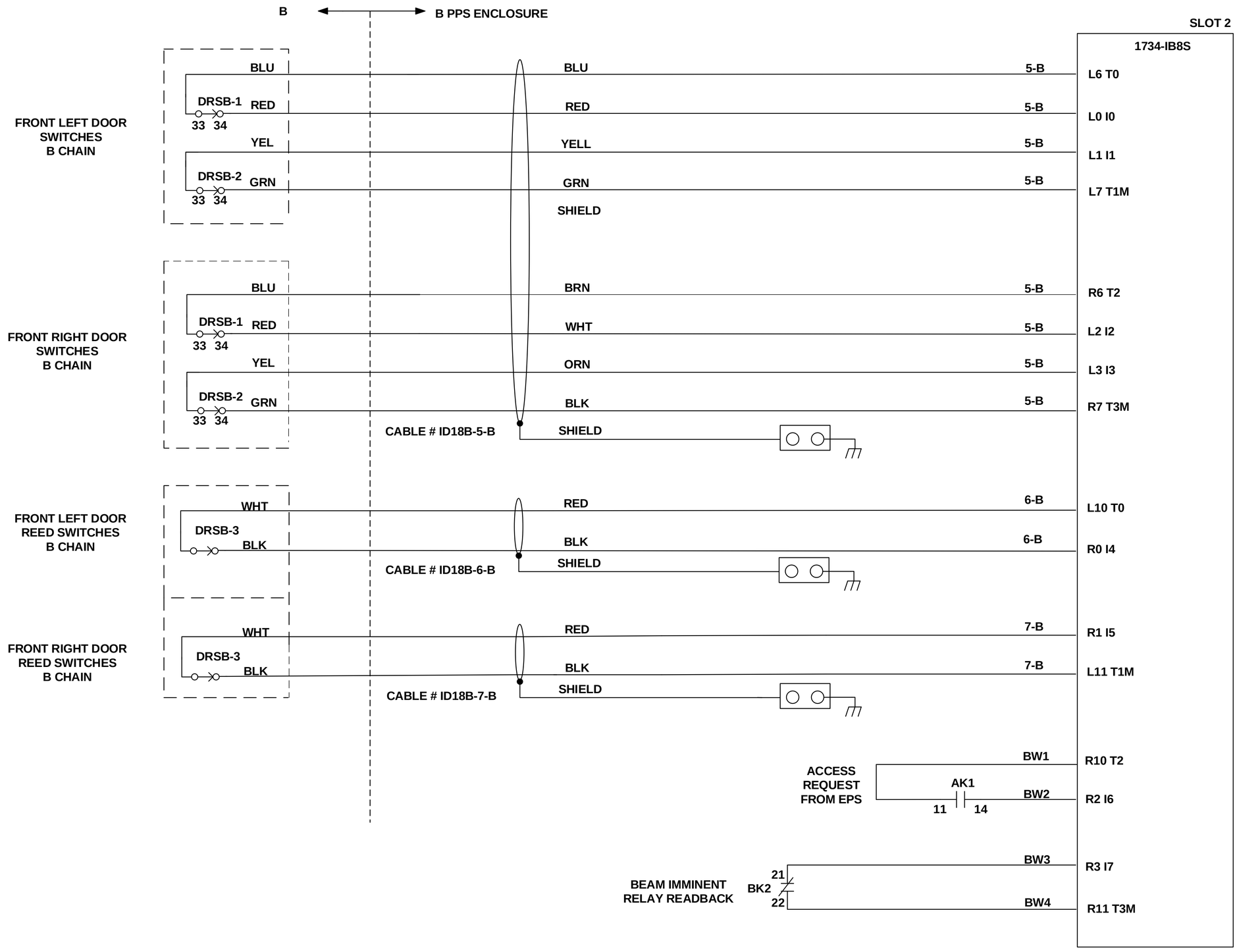

B

LT-EL-BL-EI (DRAWING DIRECTORY)	LT-EL-BL-EI-PPS-1180-93 (DRAWING NUMBER)	A (REV)
COMPUTER REPRODUCABLE	SCALE: N/A	SHEET 12 OF 21

LT-EL-BL-EI-PPS-1180-93

REV	DESCRIPTION	DATE	BY	CHECKED	APP
	SEE SHEET 1				

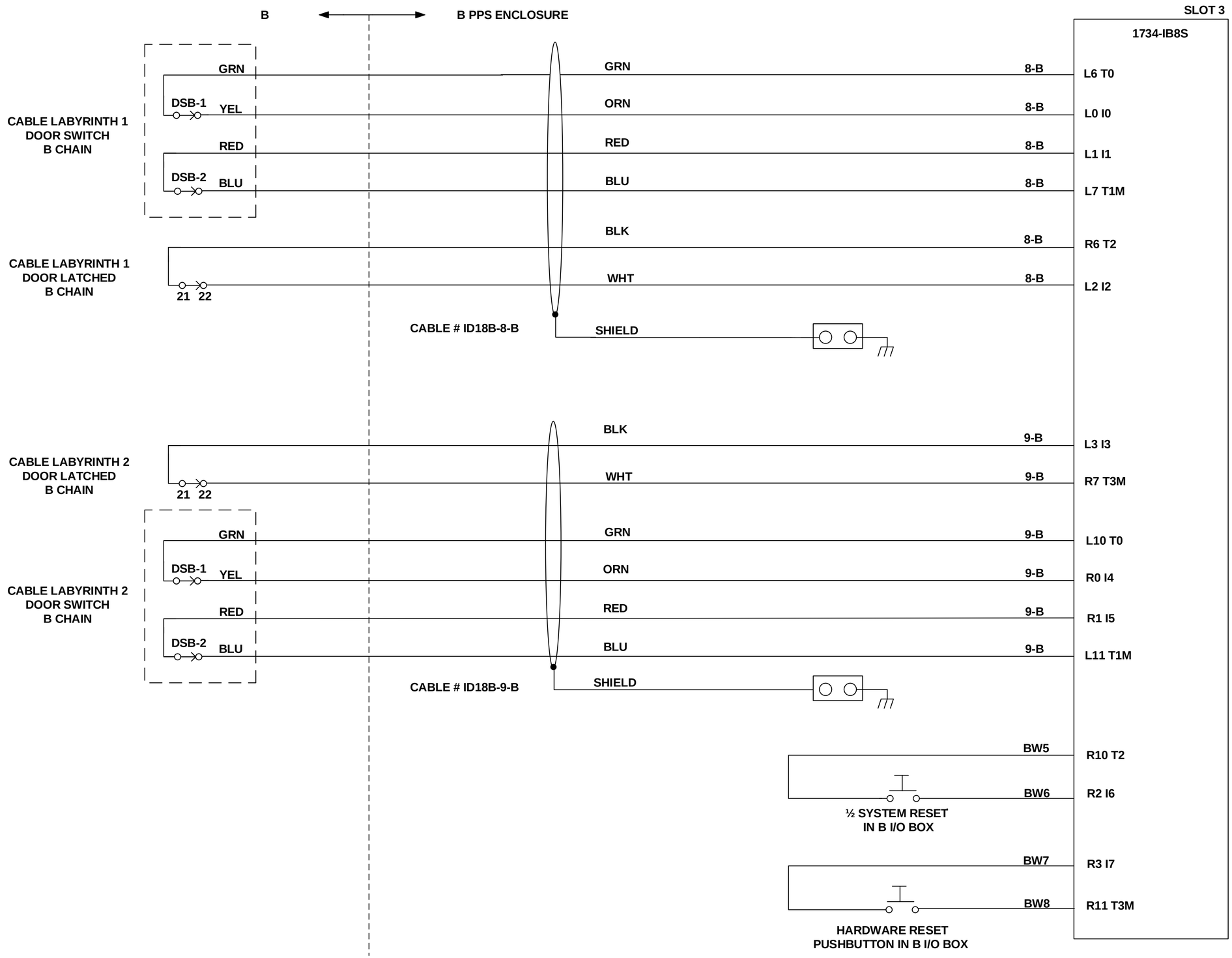

B

LT-EL-BL-EI (DRAWING DIRECTORY)	LT-EL-BL-EI-PPS-1180-93 (DRAWING NUMBER)	A (REV)
COMPUTER REPRODUCABLE	SCALE: N/A	SHEET 13 OF 21

LT-EL-BL-EI-PPS-1180-93

REV	DESCRIPTION	DATE	BY	CHECKED	APP
	SEE SHEET 1				

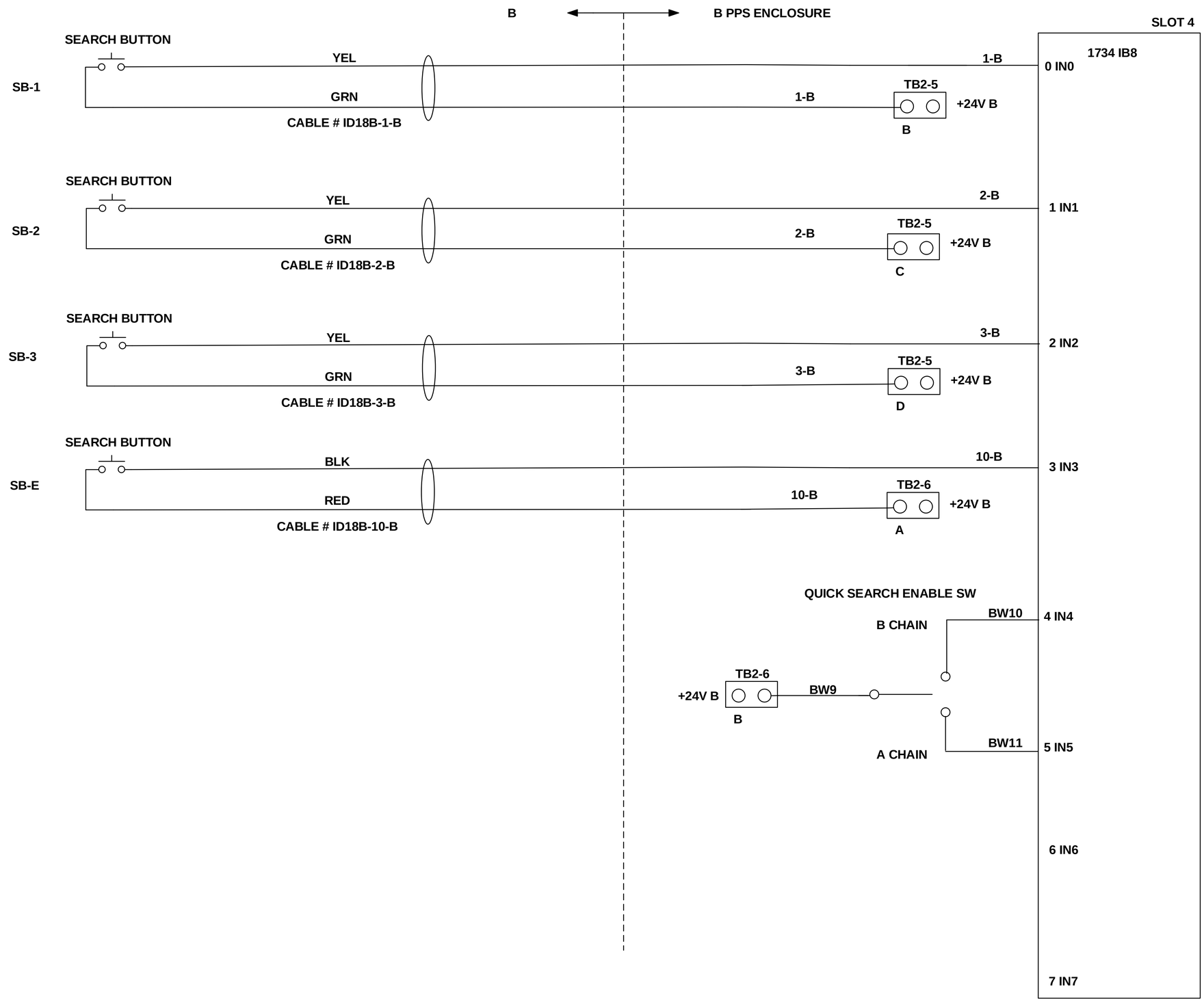

B

LT-EL-BL-EI	LT-EL-BL-EI-PPS-1180-93	A
DRAWING DIRECTORY	DRAWING NUMBER	REV
COMPUTER REPRODUCABLE	SCALE: N/A	SHEET 14 OF 21

LT-EL-BL-EI-PPS-1180-93

REV	DESCRIPTION	DATE	BY	CHECKED	APP
	SEE SHEET 1				

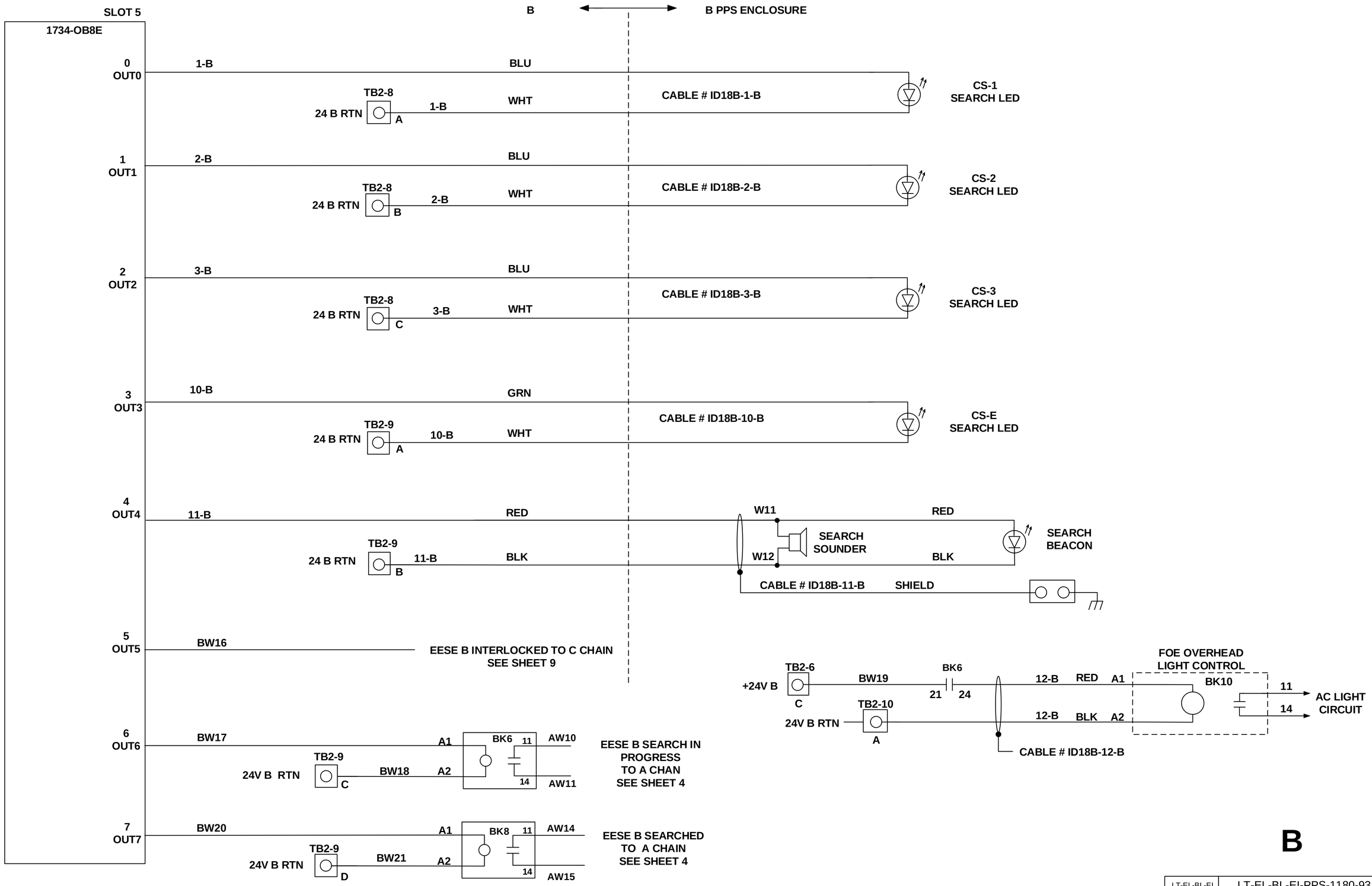

LT-EL-BL-EI (DRAWING DIRECTORY)	LT-EL-BL-EI-PPS-1180-93 (DRAWING NUMBER)	A (REV)
COMPUTER REPRODUCABLE	SCALE: N/A	SHEET 15 OF 21

LT-EL-BL-EI-PPS-1180-93

REV	DESCRIPTION	DATE	BY	CHECKED	APP
	SEE SHEET 1				

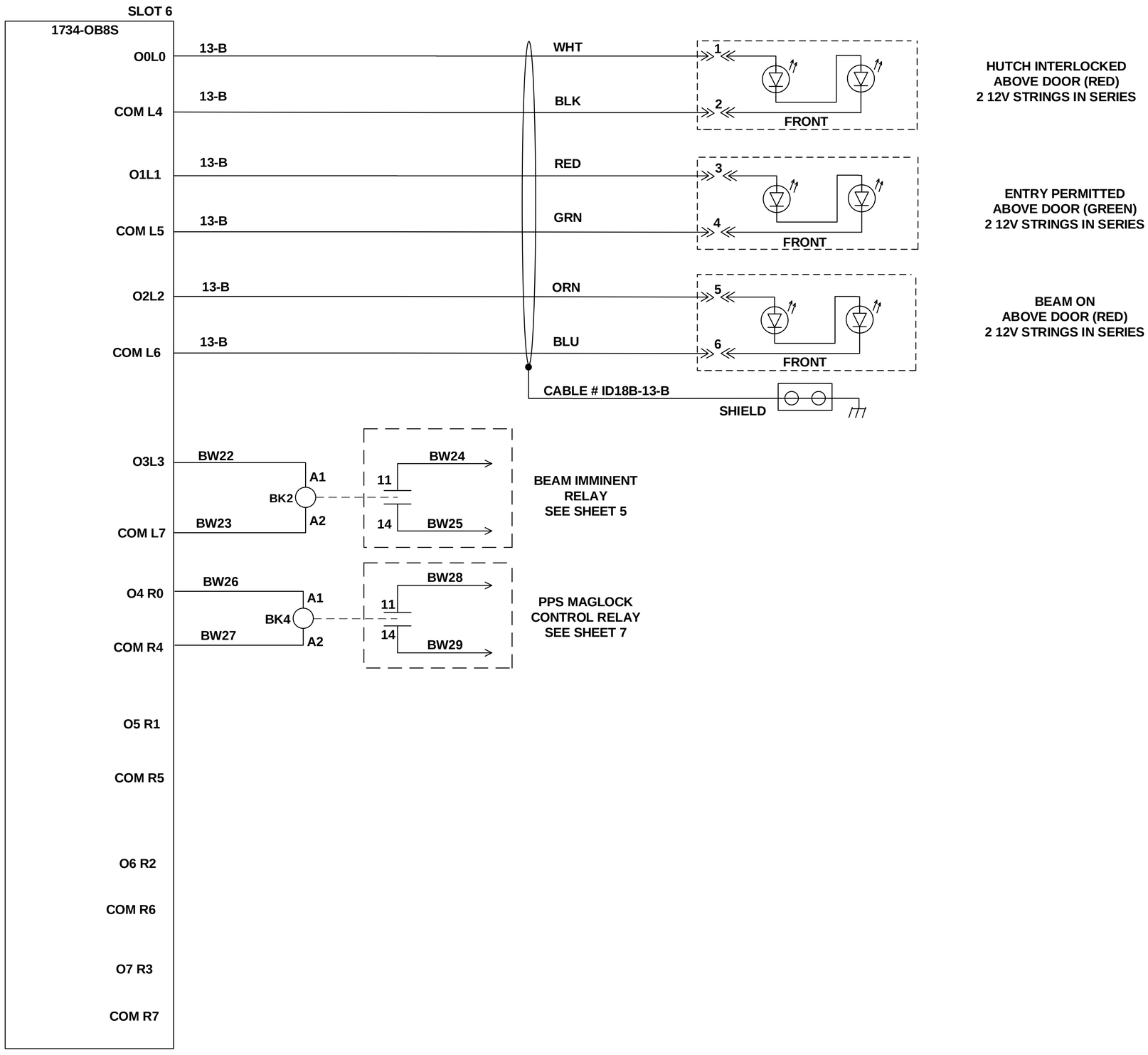

B

LT-EL-BL-EI DRAWING DIRECTORY	LT-EL-BL-EI-PPS-1180-93 DRAWING NUMBER	A REV
COMPUTER REPRODUCABLE	SCALE: N/A	SHEET 16 OF 21

LT-EL-BL-EI-PPS-1180-93

REV	DESCRIPTION	DATE	BY	CHECKED	APP
	SEE SHEET 1				

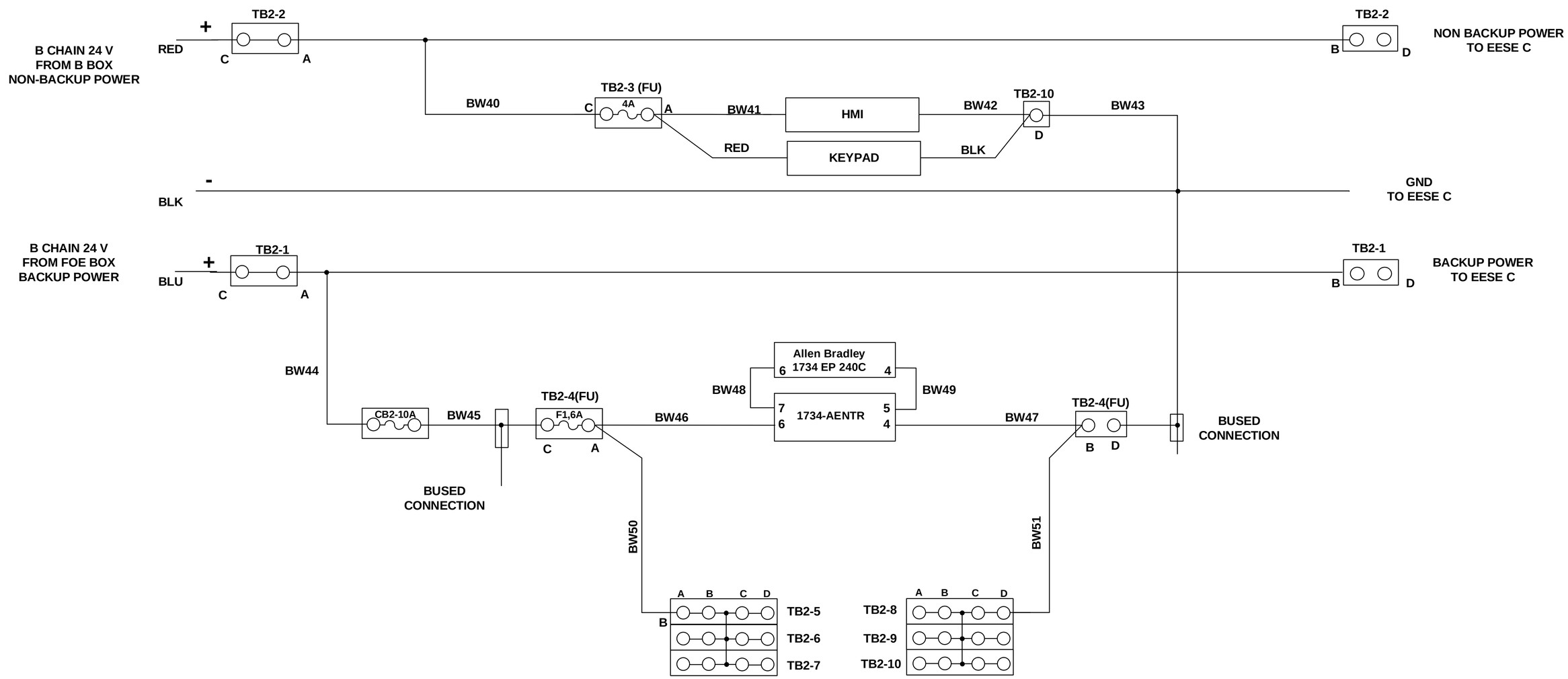

B

LT-EL-BL-EI DRAWING DIRECTORY	LT-EL-BL-EI-PPS-1180-93 DRAWING NUMBER	A REV
COMPUTER REPRODUCABLE	SCALE: N/A	SHEET 17 OF 21

LT-EL-BL-EI-PPS-1180-93

REV	DESCRIPTION	DATE	BY	CHECKED	APP
	SEE SHEET 1				

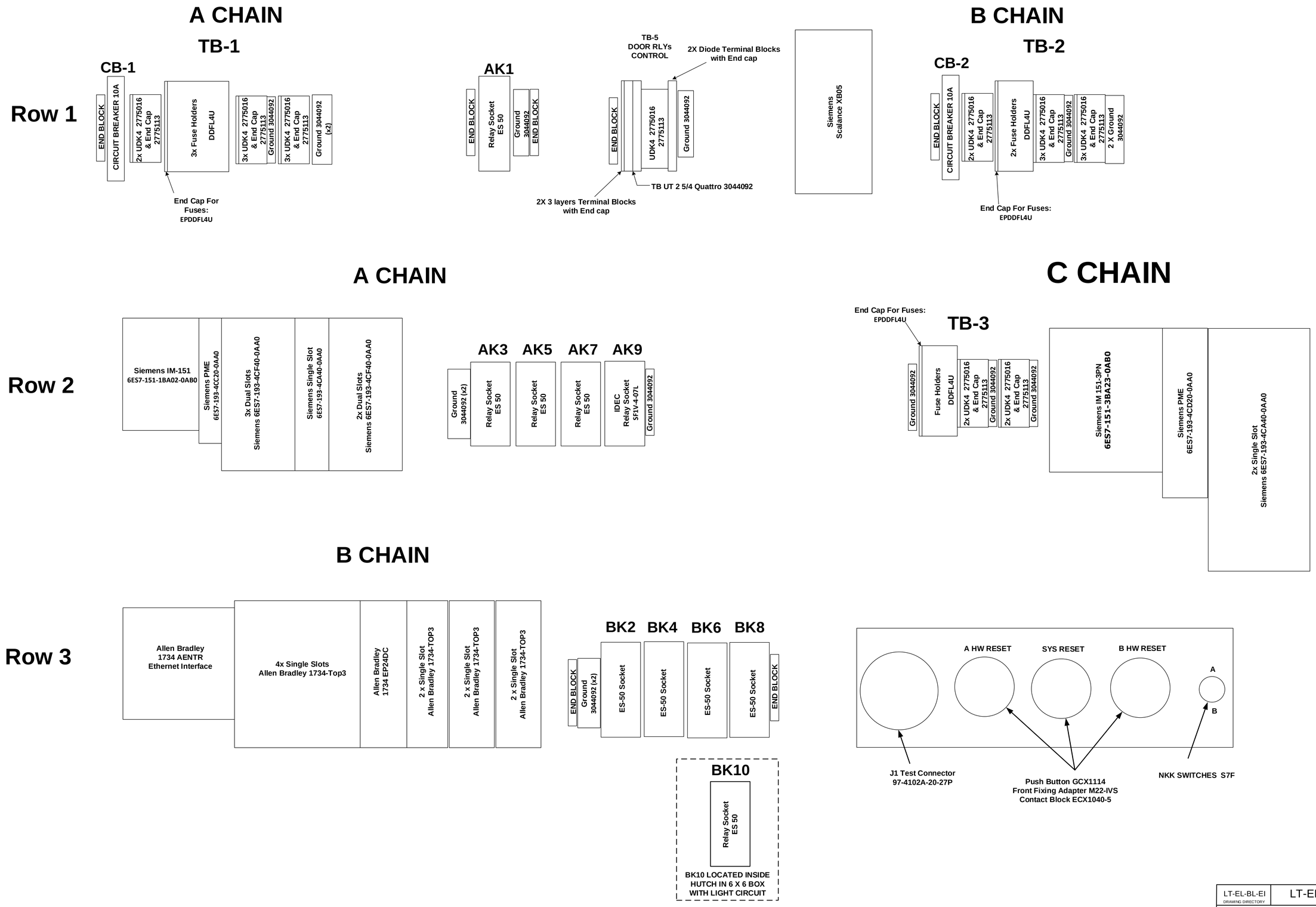

LT-EL-BL-EI-PPS-1180-93

LT-EL-BL-EI (DRAWING DIRECTORY)	LT-EL-BL-EI-PPS-1180-93 (DRAWING NUMBER)	A (REV)
COMPUTER REPRODUCABLE	SCALE: N/A	SHEET 18 OF 21

REV	DESCRIPTION	DATE	BY	CHECKED	APP
	SEE SHEET 1				

ROW 1:										
A CHAIN										
	[5]									
CB1	WMZS1B10	N/A	Circuit Breaker B10	Eaton						
TB1	19	1>2 [13]	[6]	8>8 [8	[19]	9>11 [13]	[2]	[19]	12>15 [1	[2]
RACKET ASSEMBLY										
	97-4102A-20-27P		TEST CONNECTOR	AMPHENOL						
	GCS 1114, M22-IVS, ECS 1040-5		PUSHBUTTON ASSEMBLY							
	GCS 1114, M22-IVS, ECS 1040-5		PUSHBUTTON ASSEMBLY							
	GCS 1114, M22-IVS, ECS 1040-5		PUSHBUTTON ASSEMBLY							
	S7F		TONGLE SWITCH	NKK						
B CHAIN										
	[5]									
CB2	WMZS1B10	N/A	Circuit Breaker B10	Eaton						
TB2	19	1>2 [13]	[6]	>5 [8	[19]	6>7 [13]	[2]	[19]	8>9 [	[2]
ROW 2:										
SLOT	MODULE	SOCKET	DESCRIPTION	VENDOR						
	6ES7-151-1BA02-0AA0	N/A	PROFI-BUS	SIEMENS						
1	6ES7-4CA50-0AB0	6ES7-193-4CD20-0AA0	POWER MODULE-PME	SIEMENS						
2	6ES7-138-4FA04-0AB0	6ES7-193-4CF40-0AA0	4/8 FDI 8 SAFE IN	SIEMENS						
3	6ES7-138-4FA04-0AB0	6ES7-193-4CF40-0AA0	4/8 FDI 8 SAFE IN	SIEMENS						
4	6ES7-131-4BF00-0AB0	6ES7-193-4CA40-0AA0	8DI STANDARD IN	SIEMENS						
5	6ES7-131-4BF00-0AB0	6ES7-193-4CA40-0AA0	8DI STANDARD IN	SIEMENS						
6	6ES7-132-4BF00-0AA0	6ES7-193-4CA40-0AA0	8DO STANDARD OUT	SIEMENS						
7	6ES7-138-4FB03-0AB0	6ES7-193-4CF40-0AA0	4FD0 SAFE OUT	SIEMENS						
8	6ES7-138-4FB03-0AB1	6ES7-193-4CF40-0AA1	4FD0 SAFE OUT	SIEMENS						
AK1	OW5669.12/983/61	RT 78626	RELAY	SHRACK						
AK3	OW5669.12/983/61	RT 78626	RELAY	SHRACK						
AK5	RF1V-3A1BL-D24	SF1V-4-07L	RELAY SOCKET	IDEC						
AK7	OW5669.12/983/61	RT 78626	RELAY	SHRACK						
AK9	OW5669.12/983/61	RT 78626	RELAY	SHRACK						
TB3	[7]									
	Scalance XB005		EHTERNET SWITCH	SIEMENS						
EPS										
	6ES7-151-3BA23-0AB0	N/A	EHTERNET INTERFACE	SIEMENS						
1	6ES7-4CA50-0AB0	6ES7-193-4CD20-0AB0	POWER MODULE-PME	SIEMENS						
2	6ES7-131-4BF00-0AB0	6ES7-193-4CA40-0AA0	8DI STANDARD IN	SIEMENS						
3	6ES7-132-4BF00-0AA0	6ES7-193-4CA40-0AA0	8DO STANDARD OUT	SIEMENS						
EK1	OW5669.12/983/61	RT 78626	RELAY	SHRACK						
ROW 3:										
B CHAIN										
SLOT	MODULE	SOCKET (QTY)	DESCRIPTION	VENDOR						
	1734 AENTR	N/A	EHTERNET INTERFACE	AB						
1	1734 IB8S	1734 TOP3 (2)	AB INPUT SAFETY IN	AB						
2	1734 IB8S	1734 TOP3 (2)	AB INPUT SAFETY IN	AB						
3	1734-IB8	1734 TB	AB INPUT STANDARD IN	AB						
4	1734 IB8S	1734 TOP3 (2)	AB INPUT SAFETY IN	AB						
5	1734-OW4	1734 TB	RELAY MODULE 4 OUTPUT	AB						
6	1734-OB8S	1734 TOP3 (2)	AB OUTPUT SAFETY OUT	AB						
BK2	OW5669.12/983/61	RT 78626	RELAY	SHRACK						
BK4	OW5669.12/983/61	RT 78626	RELAY	SHRACK						
BK6	SIM 312	SRD-SIM4	RELAY SOCKET	ELESTA						
	[5]									
TB5	[15]	1>2 [14]	19	[13	4>5 [16]	[17]				

LT-EL-BL-EI-PPS-1180-93

LT-EL-BL-EI (DRAWING DIRECTORY)	LT-EL-BL-EI-PPS-1180-93 (DRAWING NUMBER)	A (REV)
COMPUTER REPRODUCABLE	SCALE: N/A	SHEET 19 OF 21

REV	DESCRIPTION	DATE	BY	CHECKED	APP
	SEE SHEET 1				

COLOR	PROD #	TYPE
[1]	3044636	Double-level terminal block - UTTB 2,5
[2]	3044092	GROUND
[3]	3047293	End cover - D-UTTB 2,5/4
[4]	3047303	Spacer plate - DP-UTTB 2,5/4
[5]	1201413	End clamp - E/UK 1
[6]	EPDDFL4U	End Plate; Term Blk; DIN Rail; Gray;
[7]	3044542	DIN Rail Terminal Blocks UT 2 5/4-QUATTRO
[8]	DDFL-4U	24V FUSES
[9]	3044076	Feed-through terminal block - UT 2,5
[10]	3047028	End cover - D-UT 2,5/10
[11]	3047170	End cover - D-UT 2,5/4-QUATTRO
[12]	3044102	Feed-through terminal block - UT 4
[13]	2775016	Feed-through terminal block - UDK 4
[14]	KN-TL-14	KONNECT IT 3 CIRCUIT TERMINAL BLOCK
[15]	KN-EC-TL	3 CIRCUIT TERMINAL BLOCK COVER
[16]	CDL4U(E)DD2	99321 ALTECH DIODE TERMINAL BLOCK
[17]	EPCDL4U	ALTECH DIODE TB END COVER
[18]	3044636	Diode TB - UTTB 2,5 O-UL/UR-UL
[19]	2775113	D-UDK4 END COVER

[1] & [18] are the same part except [18] has been modified with diodes.

[1]
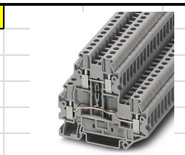

[7]

[13]

[19]

[2]

[8]

[14]

[3]

[9]

[15]

[4]

[10]

[16]
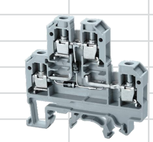

[5]

[11]

[17]

[6]

[12]

[18]
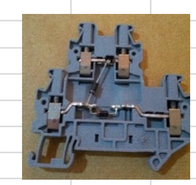

Paired part numbers are color coordinated.

LT-EL-BL-EI (DRAWING DIRECTORY)	LT-EL-BL-EI-PPS-1180-93 (DRAWING NUMBER)	A (REV)
COMPUTER REPRODUCABLE	SCALE: N/A	SHEET 20 OF 21

LT-EL-BL-EI-PPS-1180-93

REV	DESCRIPTION	DATE	BY	CHECKED	APP
	SEE SHEET 1				

18ID B Hutch Cable List

CABLE Num.	CHAIN	From LOCATION	To LOCATION	CONDUCTORS Needed
ID18B-1-A	A	B	CS1 Emergency stop & EPS String	6
ID18B-1-B	B	B	CS1 Emergency stop, CS1 Btn & CS1 LED	8
ID18B-2-A	A	B	CS2 Emergency stop & EPS String	6
ID18B-2-B	B	B	CS2 Emergency stop, CS2 Btn & CS2 LED	8
ID18B-3-A	A	B	CS3 Emergency stop & EPS String	6
ID18B-3-B	B	B	CS3 Emergency stop, CS3 Btn & CS3 LED	8
ID18B-4-A	A	B	Emergency Access E-Stop & EPS String	6
ID18B-4-B	B	B	Emergency Access E-Stop	4
ID18B-5-A	A	B	Door switches	8
ID18B-5-B	B	B	Door switches	8
ID18B-6-A	A	B	Front Left MAGLOCK Switch & Coil	4
ID18B-6-B	B	B	Front Left REED Switch	2
ID18B-7-A	A	B	Front Right MAGLOCK Switch & Coil	4
ID18B-7-B	B	B	Front Right REED Switch	2
ID18B-8-A	A	B	Cable Labyrinth 1 switches & Latch	6
ID18B-8-B	B	B	Cable Labyrinth 1 switches & Latch	6
ID18B-9-A	A	B	Cable Labyrinth 2 switches & Latch	6
ID18B-9-B	B	B	Cable Labyrinth 2 switches & Latch	6
ID18B-10-A	A	B	CS-E	2
ID18B-10-B	B	B	CS-E & LED	4
ID18B-11-A	A	B	SPARE	-
ID18B-11-B	B	B	Search Sounder & Search Beacon	2
ID18B-12-A	A	B	SPARE	-
ID18B-12-B	B	B	OverHead Lights	2
ID18B-13-A	A	B	Front A Chain Interlock, Entry Permit, Beam On LEDs	6
ID18B-13-B	B	B	Front B Chain Interlock, Entry Permit, Beam On LEDs	6
ID18B-14-A	A	B	Beam Imminent Beacon & Sounder	2
ID18B-14-B	B	B	SPARE	-
ID18B-15-A	A	B	Door Inhibit	2
ID18B-15-B	B	B	SPARE	-
ID18B-16-A	A	B	SPARE	-
ID18B-16-B	B	B	SPARE	-
COMMUNICATION CABLES				
POWER CABLES				

LT-EL-BL-EI-PPS-1180-93

LT-EL-BL-EI (DRAWING DIRECTORY)	LT-EL-BL-EI-PPS-1180-93 (DRAWING NUMBER)	A (REV)
COMPUTER REPRODUCABLE	SCALE: N/A	SHEET 21 OF 21

REV	DESCRIPTION	DATE	BY	CHECKED	APP
A	INITIAL RELEASE	10/05/2017	SEJ	JM	SB

18-ID FOE SEARCH LOGIC

(SEARCH IN B CHAIN ONLY)

GEN II

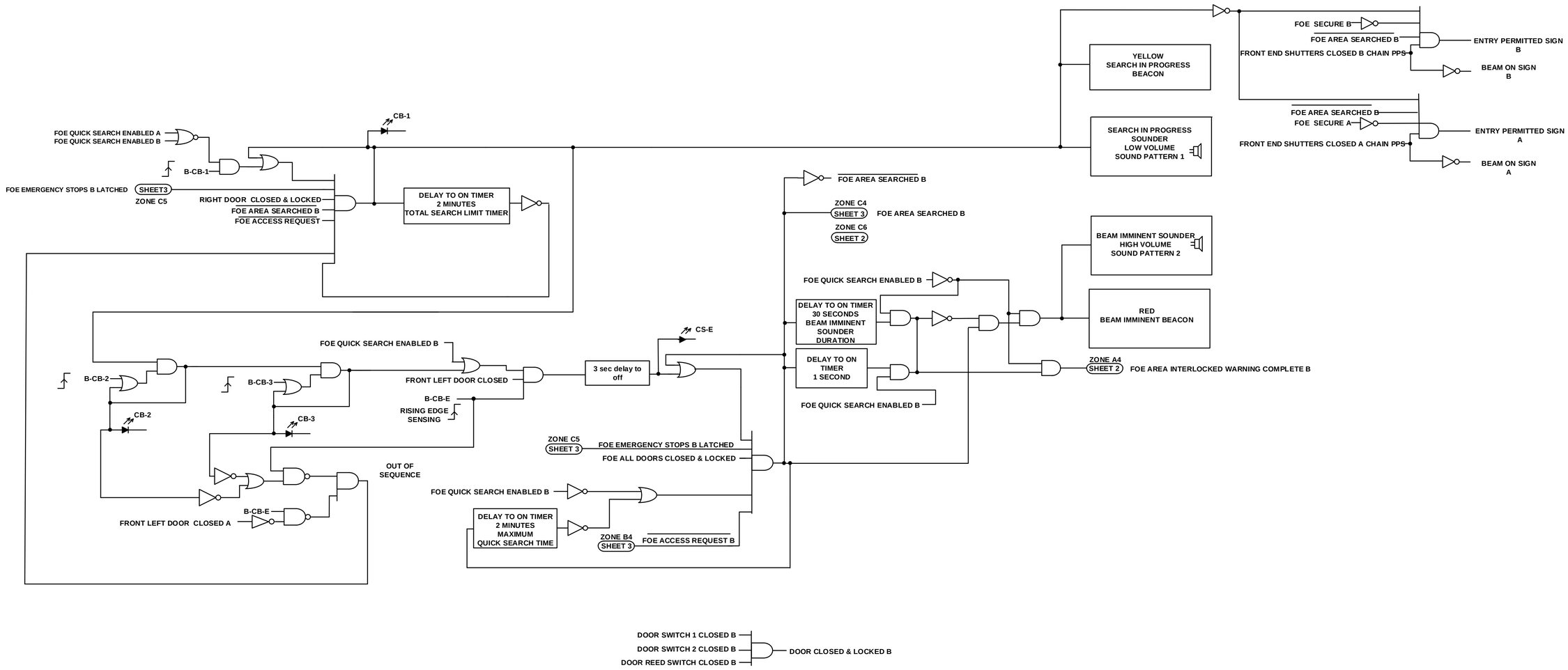

FOE LOGIC

JOB NUMBER	USED ON DWG. NO.

BROOKHAVEN NATIONAL LABORATORY

BROOKHAVEN NATIONAL LABORATORY
BROOKHAVEN SCIENCE ASSOCIATES
UPTON, NEW YORK 11973
Exploring Life's Mysteries, Protecting its Future

NSLSII NATIONAL SYNCHROTRON LIGHT SOURCE II

UNLESS OTHERWISE SPECIFIED
INTEGER TOLERANCES ± .06
DECIMAL TOLERANCES
.X ± .030
.XX ± .015
.XXX ± .010
ANGULAR TOLERANCE ± 0.5°
UNSPECIFIED RADII .02 MAX
125 BREAK SHARP CORNERS AND EDGES
FINISH MAX .03 MIN .005

UNLESS OTHERWISE SPECIFIED DIMENSIONS ARE IN INCHES DIMENSIONS IN [ ] ARE MILLIMETERS EQUIV. FOR REF. ONLY

ESH&Q RISK LEVEL A-1

INTERPRET DRAWING AS PER ANSI Y14.5 OR Y32.2

		DATE	OUTSTANDING ECN'S
DRWN BY	S. JARZABKOWSKI	10/05/2017	
CHK BY	J. MALLEY	10/06/2017	
ENG APP	S. BUDA	10/05/2017	
SUPV APP	S.B/ G. GANETIS	10/10/2017	
QA APP	E. CHESWICK	10/05/2017	
ESH APP	B. LEE	10/05/2017	

WIRING DIAGRAM,
18-ID FOE PPS SEARCH LOGIC

LT-EL-BL-EI (DRAWING DIRECTORY) | LT-EL-BL-EI-PPS-1180-96 (DRAWING NUMBER) | A (REV)

COMPUTER REPRODUCABLE | SCALE: N/A | SHEET 1 OF 12

LT-EL-BL-EI-PPS-1180-96

REV	DESCRIPTION	DATE	BY	CHECKED	APP
	SEE SHEET 1				

18-ID FOE A CHAIN LOGIC

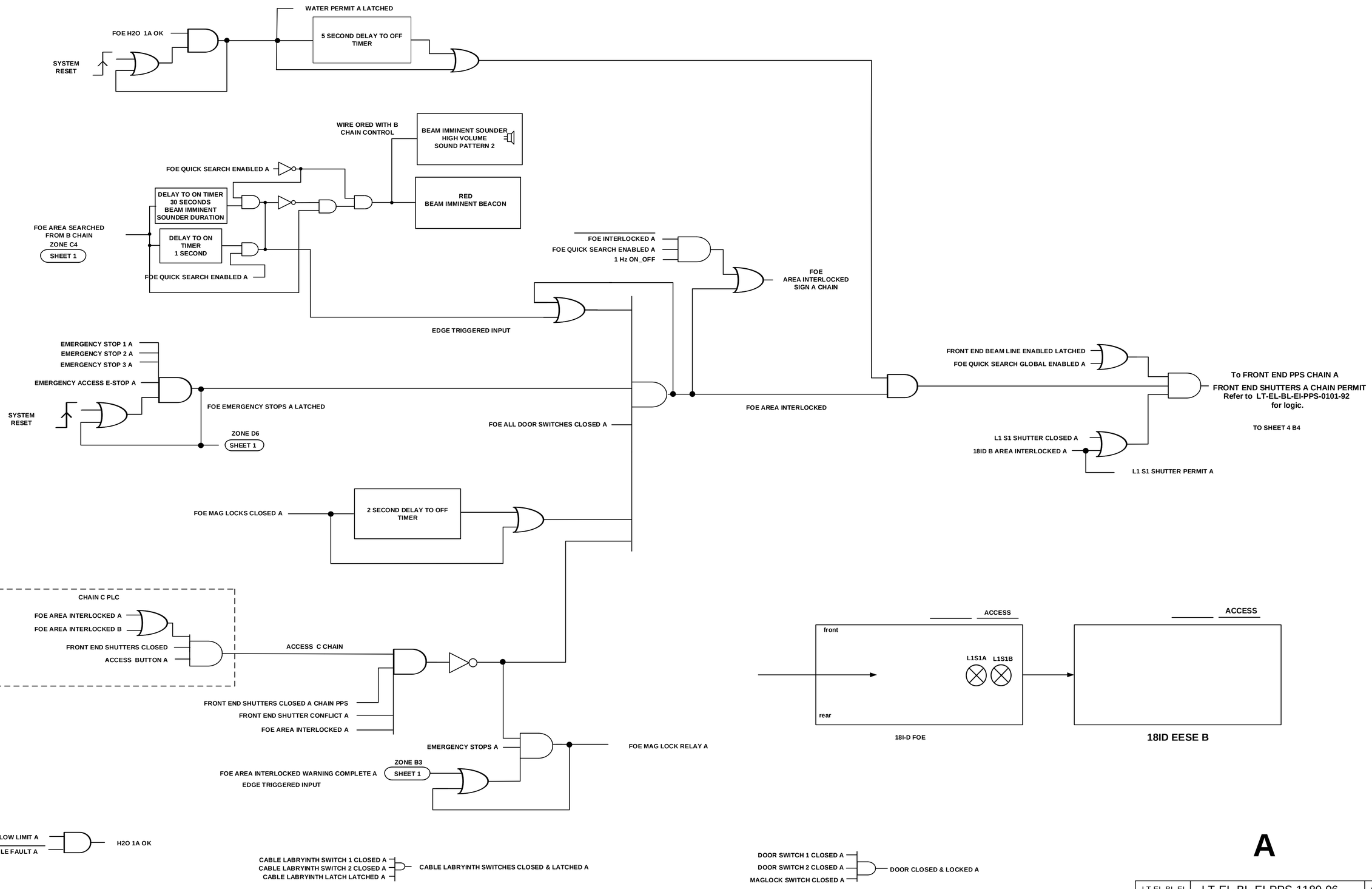

A

LT-EL-BL-EI	LT-EL-BL-EI-PPS-1180-96	A
DRAWING DIRECTORY	DRAWING NUMBER	REV

COMPUTER REPRODUCABLE | SCALE: N/A | SHEET 2 OF 12

LT-EL-BL-EI-PPS-21180-96

REV	DESCRIPTION	DATE	BY	CHECKED	APP
	SEE SHEET 1				

18-ID FOE B CHAIN LOGIC

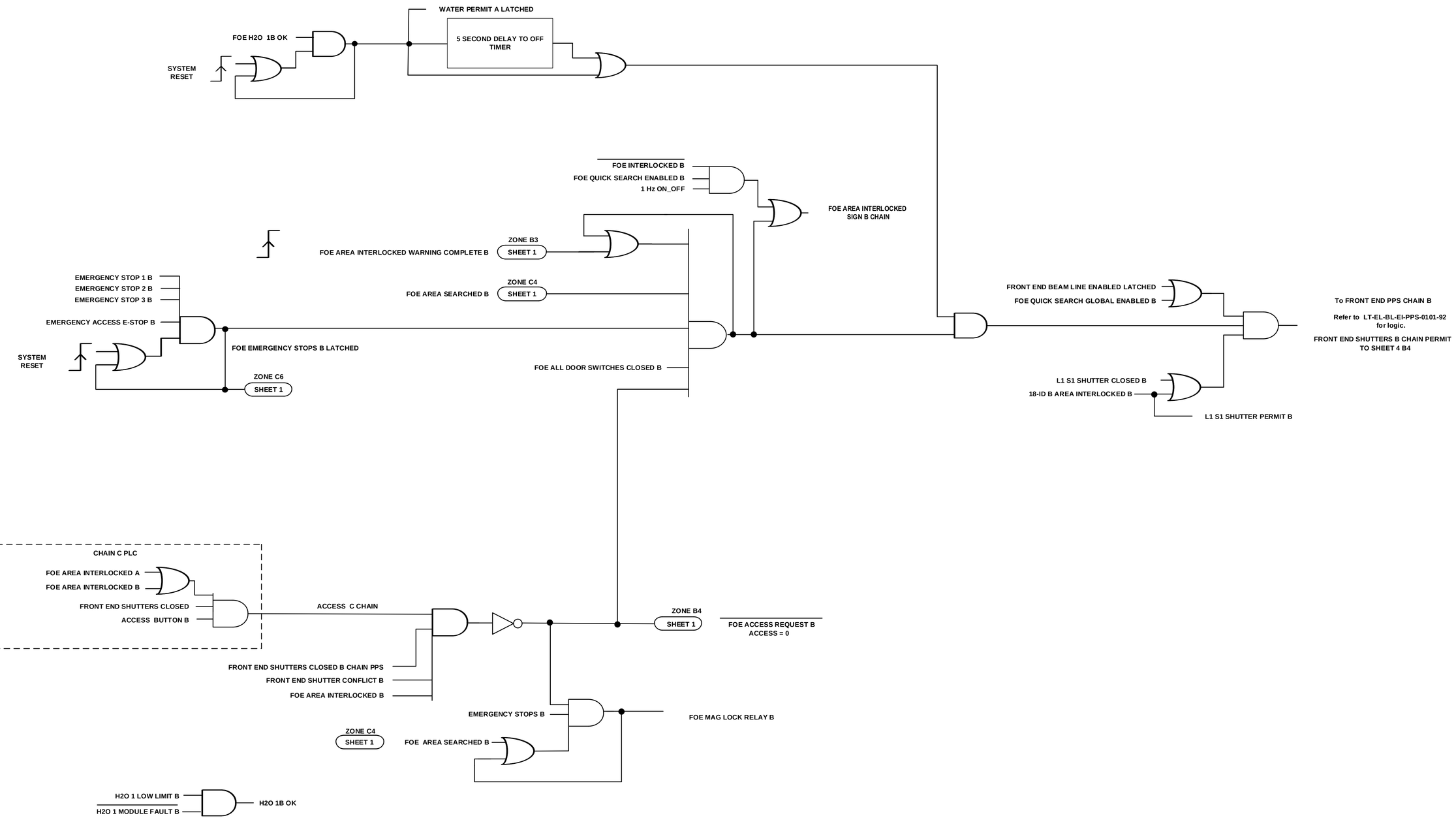

B

LT-EL-BL-EI (DRAWING DIRECTORY)	LT-EL-BL-EI-PPS-1180-96 (DRAWING NUMBER)	A (REV)
COMPUTER REPRODUCABLE	SCALE: N/A	SHEET 3 OF 12

LT-EL-BL-EI-PPS-1180-96

REV	DESCRIPTION	DATE	BY	CHECKED	APP
	SEE SHEET 1				

18-ID ESEE B SEARCH LOGIC

(SEARCH IN B CHAIN ONLY)

GEN II

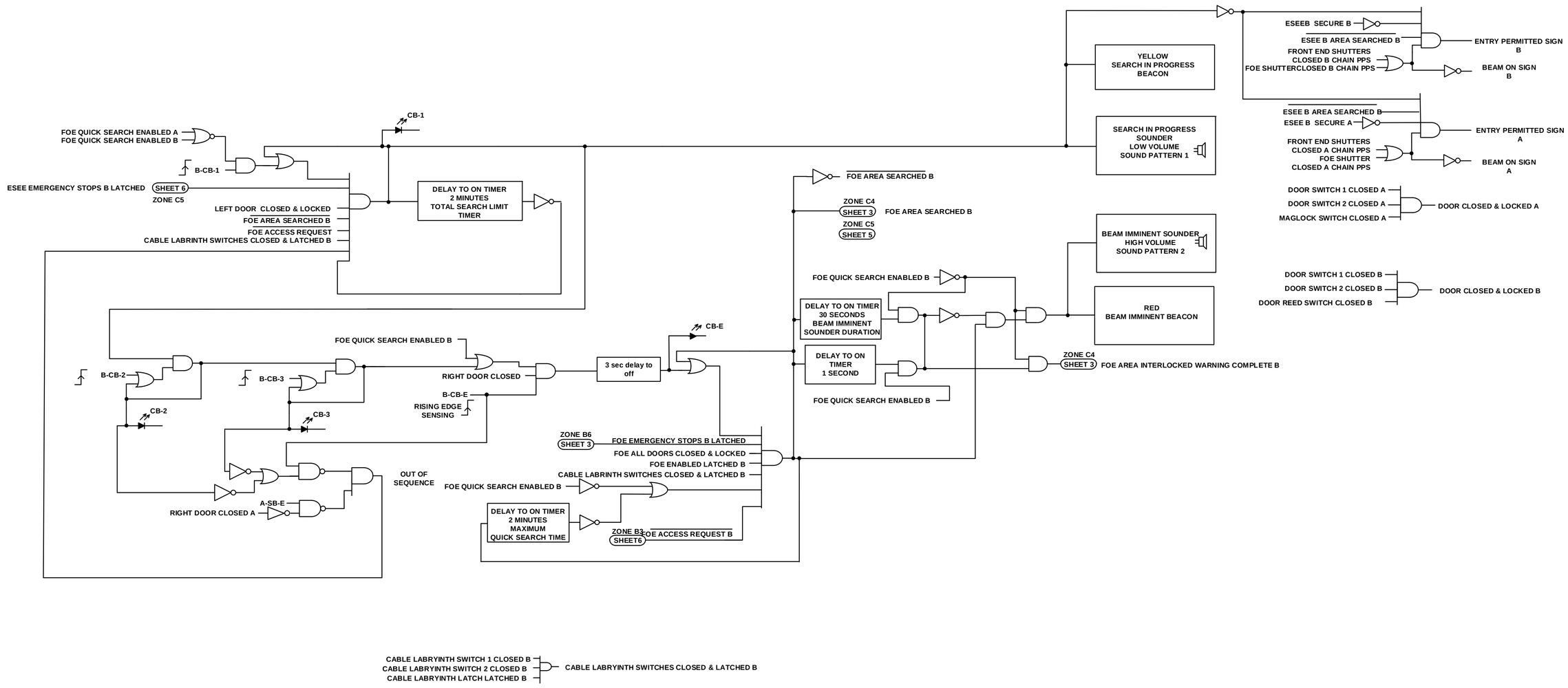

LT-EL-BL-EI	LT-EL-BL-EI-PPS-1180-96	A
DRAWING DIRECTORY	DRAWING NUMBER	REV
COMPUTER REPRODUCABLE	SCALE: N/A	SHEET 4 OF 12

LT-EL-BL-EI-PPS-1180-96

REV	DESCRIPTION	DATE	BY	CHECKED	APP
	SEE SHEET 1				

18-ID ESEE B A CHAIN LOGIC

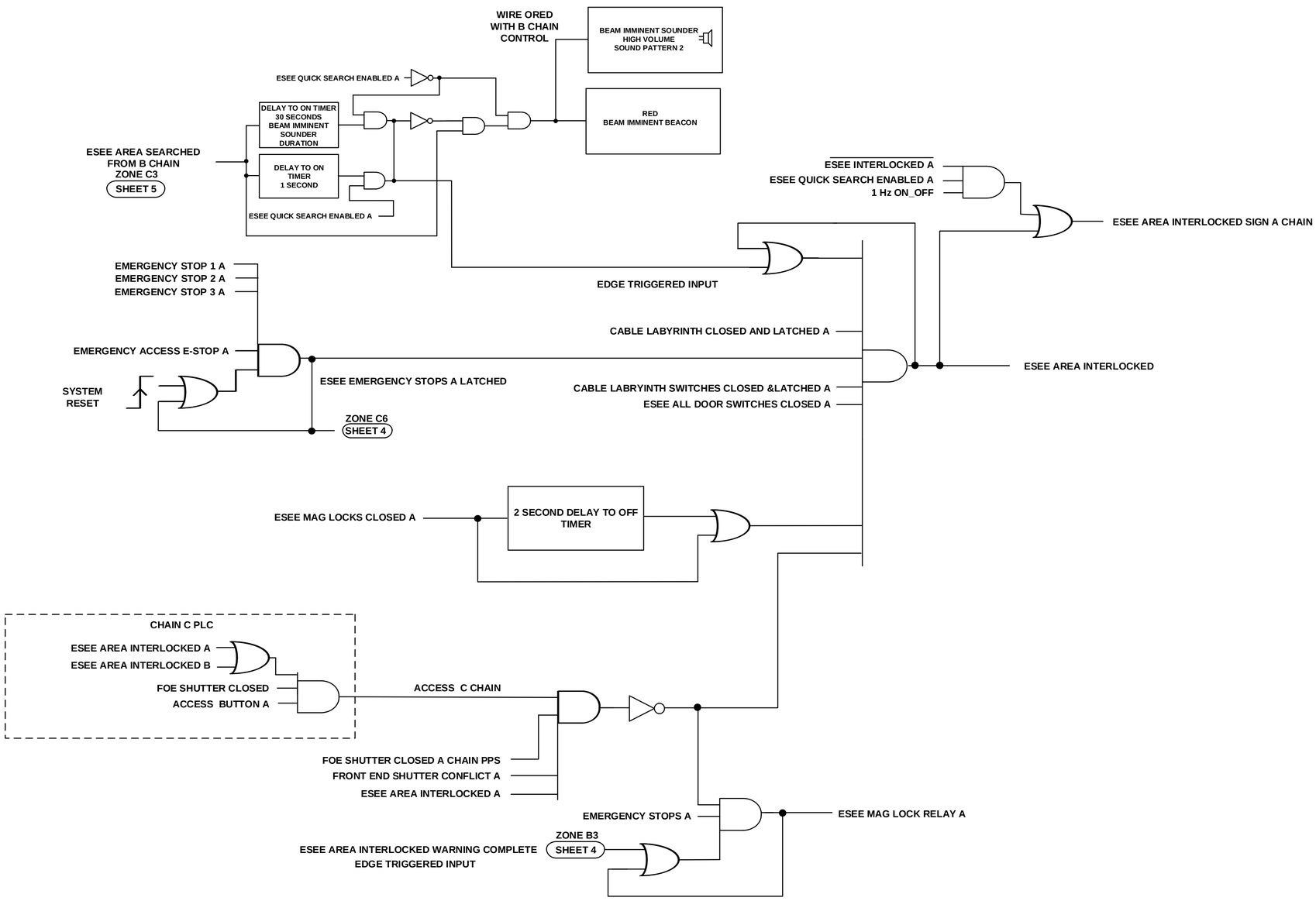

A

LT-EL-BL-EI	LT-EL-BL-EI-PPS-1180-96	A
DRAWING DIRECTORY	DRAWING NUMBER	REV
COMPUTER REPRODUCABLE	SCALE: N/A	SHEET 5 OF 12

LT-EL-BL-EI-PPS-1180-96

REV	DESCRIPTION	DATE	BY	CHECKED	APP
	SEE SHEET 1				

18-ID ESEE B B CHAIN LOGIC

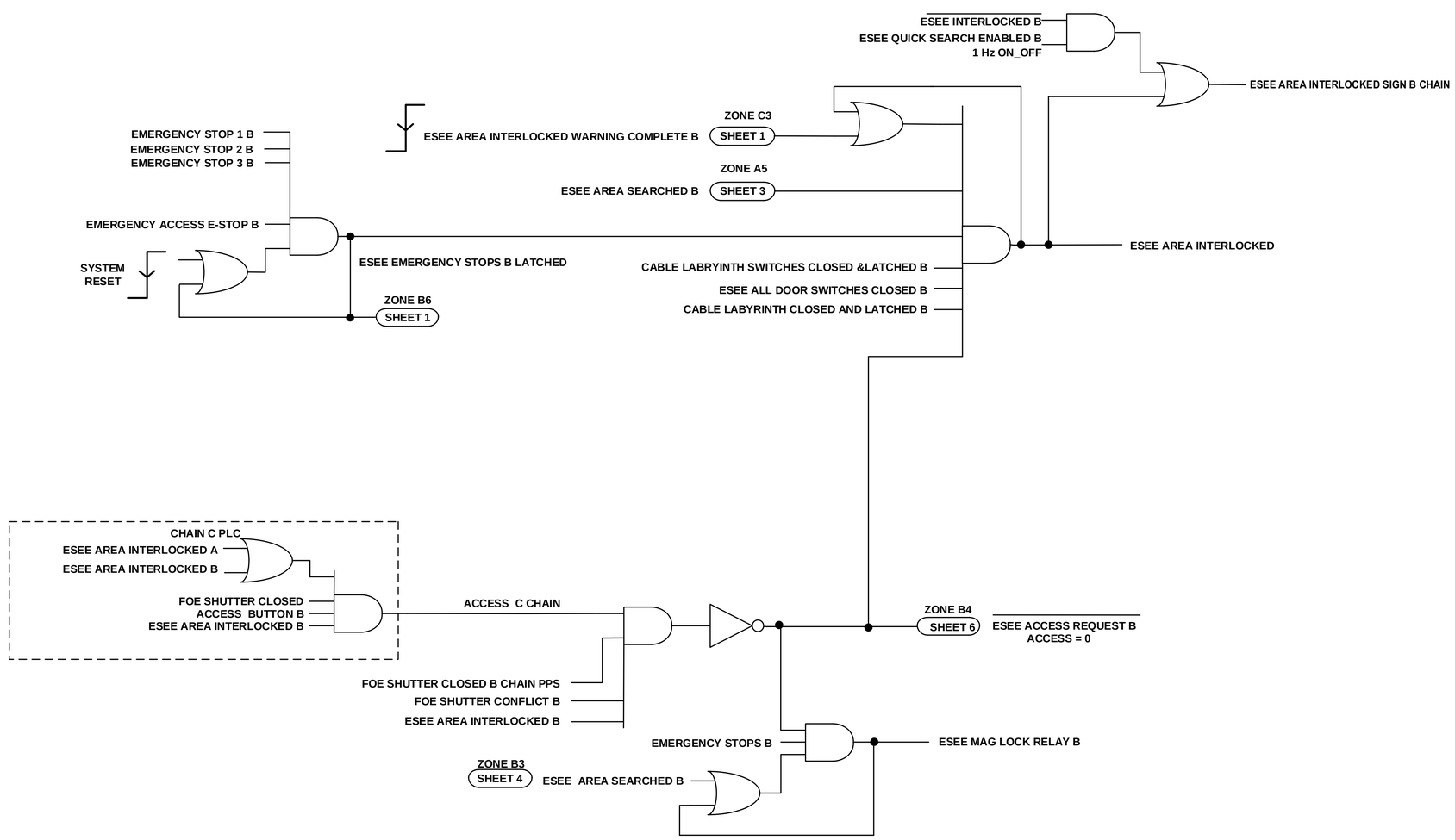

B

LT-EL-BL-EI (DRAWING DIRECTORY)	LT-EL-BL-EI-PPS-1180-96 (DRAWING NUMBER)	A (REV)
COMPUTER REPRODUCABLE	SCALE: N/A	SHEET 6 OF 12

LT-EL-BL-EI-PPS-1180-96

REV	DESCRIPTION	DATE	BY	CHECKED	APP
	SEE SHEET 1				

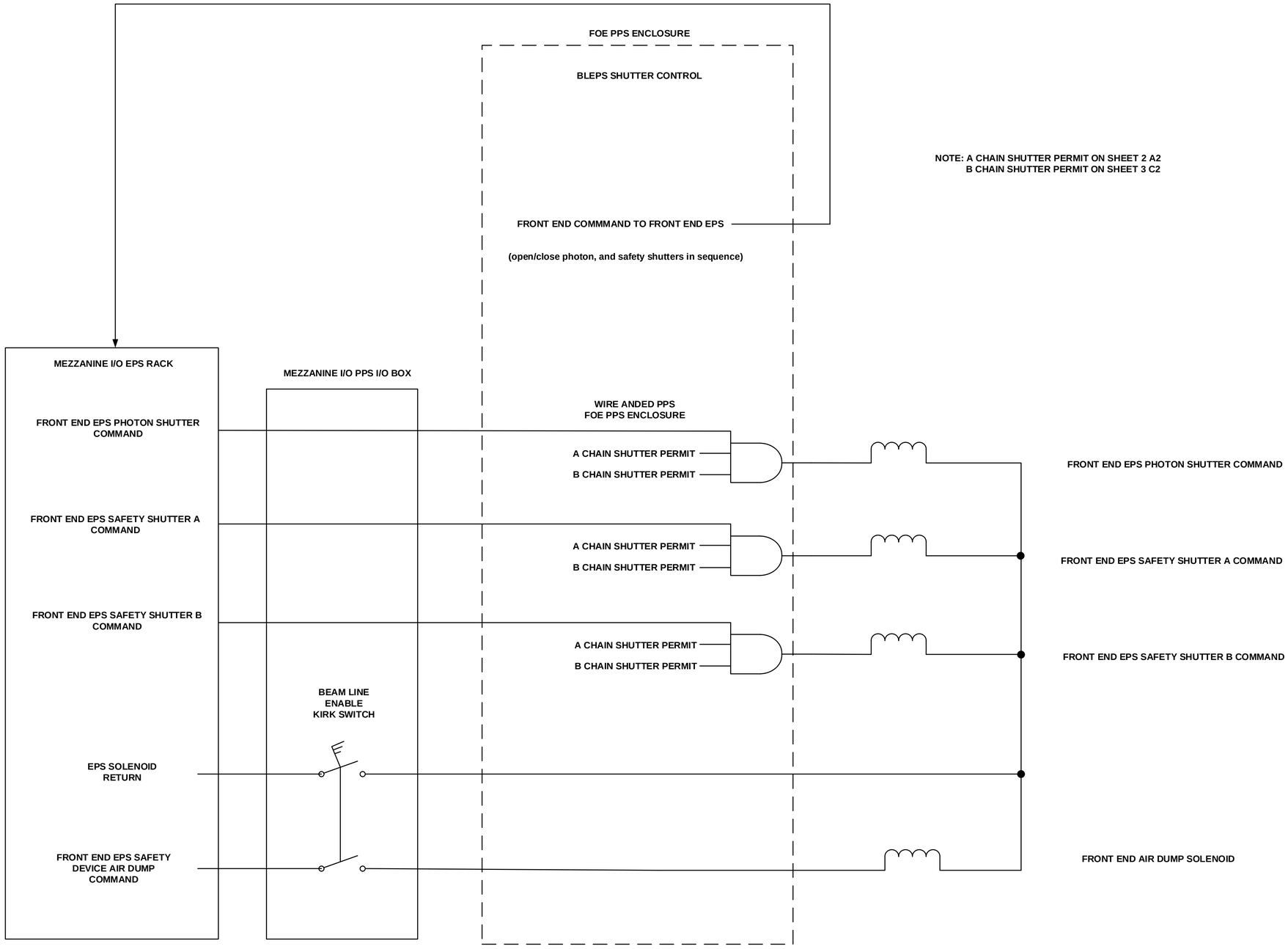

LT-EL-BL-EI DRAWING DIRECTORY	LT-EL-BL-EI-PPS-1180-96 DRAWING NUMBER	A REV
COMPUTER REPRODUCABLE	SCALE: N/A	SHEET 7 OF 12

LT-EL-BL-EI-PPS-1180-96

REV	DESCRIPTION	DATE	BY	CHECKED	APP
	SEE SHEET 1				

C CHAIN DOOR CONTROL FOE

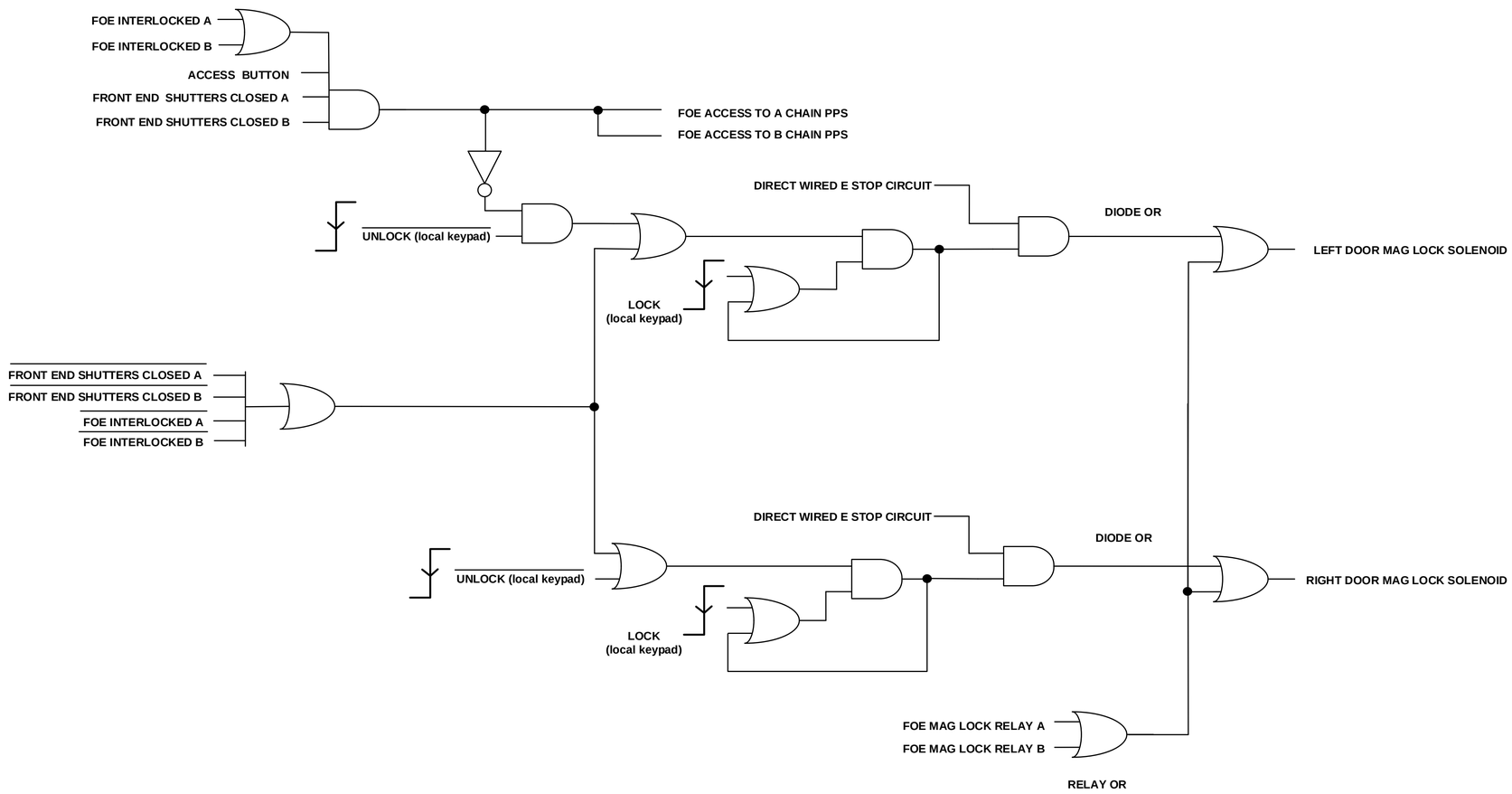

EPS

LT-EL-BL-EI	LT-EL-BL-EI-PPS-1180-96	A
DRAWING DIRECTORY	DRAWING NUMBER	REV

COMPUTER REPRODUCABLE | SCALE: N/A | SHEET 8 OF 12

LT-EL-BL-EI-PPS-1180-96

REV	DESCRIPTION	DATE	BY	CHECKED	APP
	SEE SHEET 1				

C CHAIN DOOR CONTROL ESEE B

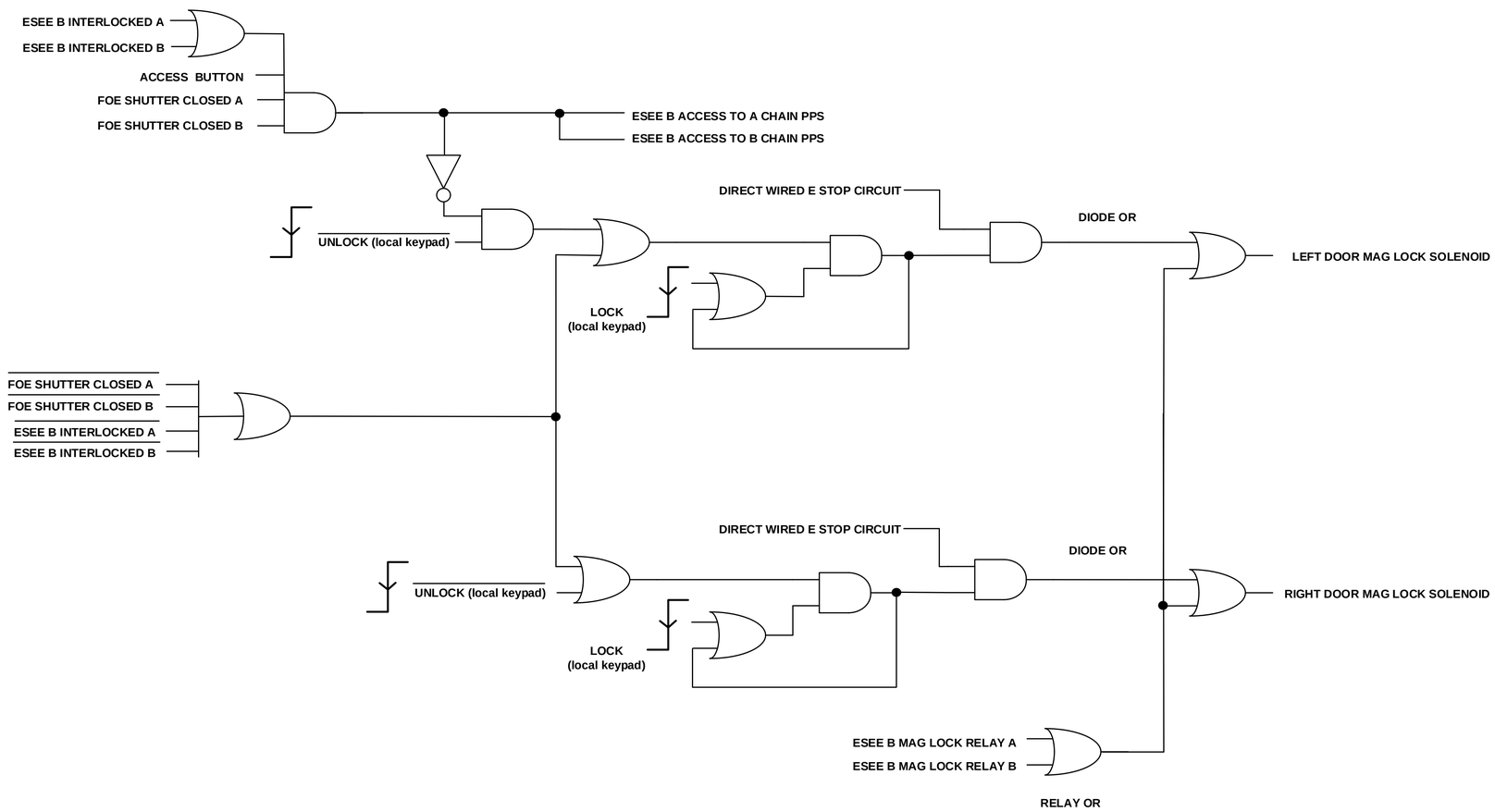

EPS

LT-EL-BL-EI	LT-EL-BL-EI-PPS-1180-96	A
DRAWING DIRECTORY	DRAWING NUMBER	REV

COMPUTER REPRODUCABLE | SCALE: N/A | SHEET 9 OF 12

LT-EL-BL-EI-PPS-1180-96

REV	DESCRIPTION	DATE	BY	CHECKED	APP
	SEE SHEET 1				

C CHAIN SHUTTER CONTROL

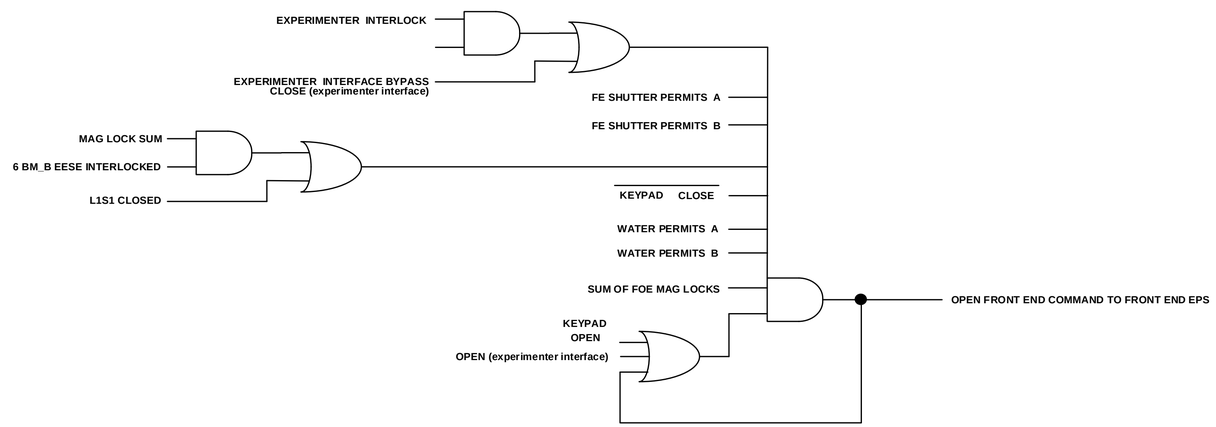

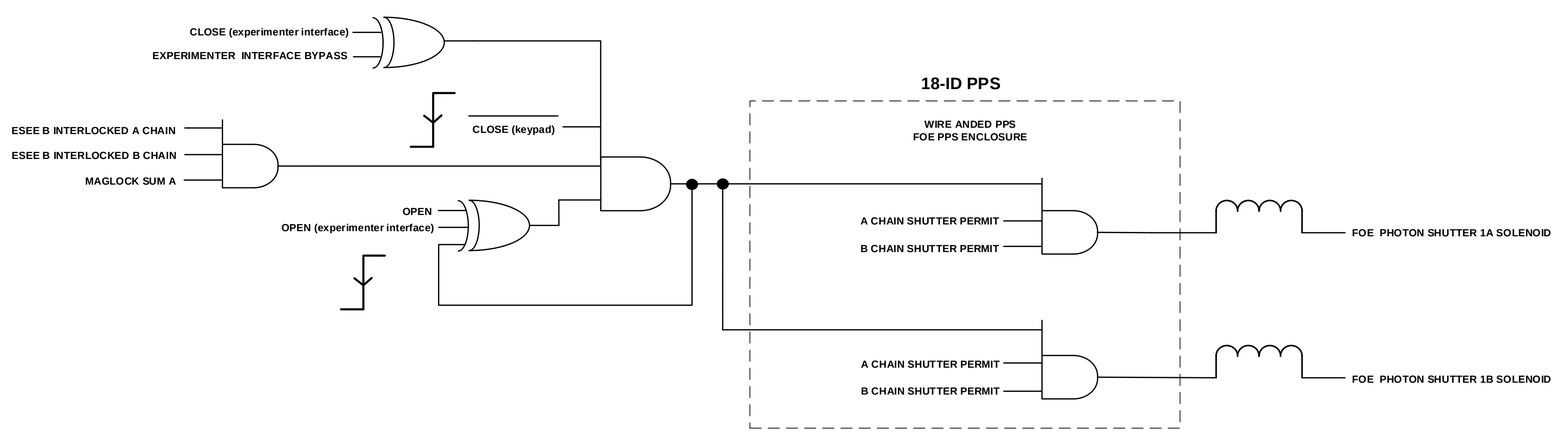

EPS

LT-EL-BL-EI DRAWING DIRECTORY	LT-EL-BL-EI-PPS-1180-96 DRAWING NUMBER	A REV
COMPUTER REPRODUCABLE	SCALE: N/A	SHEET 10 OF 12

LT-EL-BL-EI-PPS-1180-96

REV	DESCRIPTION	DATE	BY	CHECKED	APP
	SEE SHEET 1				

FAULTS AND ALARMS A CHAIN

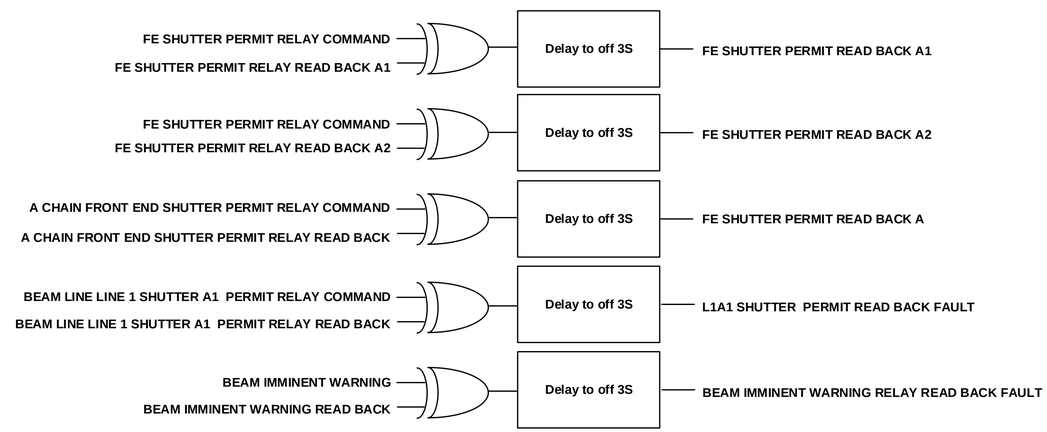

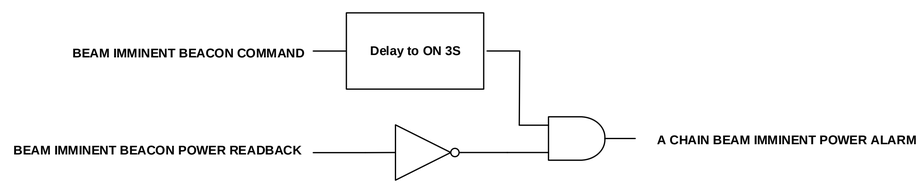

LT-EL-BL-EI-PPS-1180-96

LT-EL-BL-EI (DRAWING DIRECTORY)	LT-EL-BL-EI-PPS-1180-96 (DRAWING NUMBER)	A (REV)
COMPUTER REPRODUCABLE	SCALE: N/A	SHEET 11 OF 12

REV	DESCRIPTION	DATE	BY	CHECKED	APP
	SEE SHEET 1				

FAULTS AND ALARMS B CHAIN

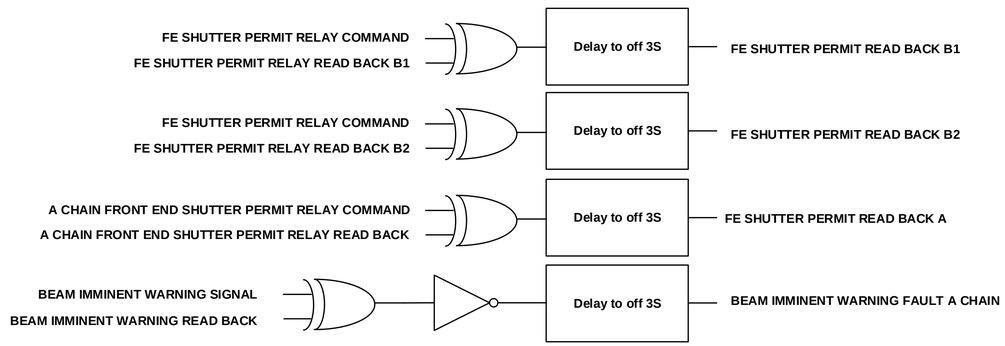

B CHAIN SAFETY SWITCH FAULTS ARE GENERATED BY FUNCTION BLOCKS, DOORS, CABLE LABYRINTHS

B CHAIN PROXIMITY SENSOR FAULT = DIRECT FROM SENSOR MODULE

B CHAIN HARDWARE FAULT = GENERATED FROM SYSTEM FAULT DATA

B CHAIN BEAM LINE FAULTA ARE SENT TO THE CONTROL ROOM ONLY WHEN BEAMLINE IS ENABLED AT FRONT END

LT-EL-BL-EI-PPS-1180-96

LT-EL-BL-EI DRAWING DIRECTORY	LT-EL-BL-EI-PPS-1180-96 DRAWING NUMBER	A REV
COMPUTER REPRODUCABLE	SCALE: N/A	SHEET 12 OF 12

REV	DESCRIPTION	DATE	BY	CHECKED	APP
A	INITIAL RELEASE	01/31/2014	SEJ	JM	SB
B	REVISED PER ECN LT-ECN-014-801	03/19/2014	CG	JM	SB
C	REVISED PER ECN LT-ECN-017-1812	08/18/2017	CG	JM	SB

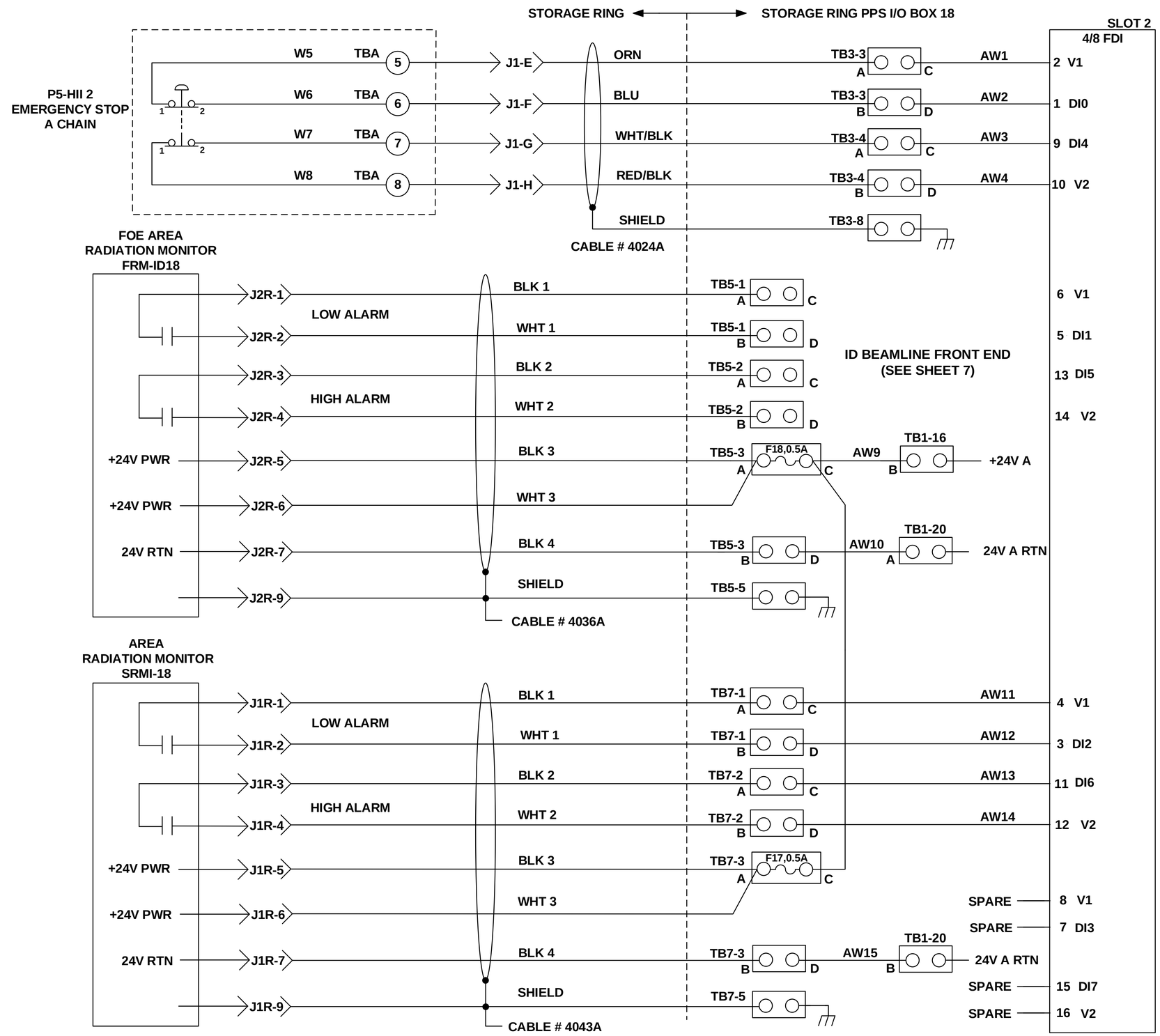

ID BEAMLINE INSTALLED ☒
BM BEAMLINE INSTALLED ☐

COMMON GROUP
A

SEE SEPARATE WIRE RUNNING LIST — RL LT-EL-SR-EI-PPS-0218-90
SEE SEPARATE PARTS LIST — PL LT-EL-SR-EI-PPS-0218-90

BROOKHAVEN NATIONAL LABORATORY

BROOKHAVEN NATIONAL LABORATORY
BROOKHAVEN SCIENCE ASSOCIATES
UPTON, NEW YORK 11973
Exploring Life's Mysteries, Protecting its Future

NSLS II NATIONAL SYNCHROTRON LIGHT SOURCE II

UNLESS OTHERWISE SPECIFIED
INTEGER TOLERANCES ± .06
DECIMAL TOLERANCES
.X ± .030
.XX ± .015
.XXX ± .010
ANGULAR TOLERANCE ± 0.5°
UNSPECIFIED RADII .02 MAX
125 BREAK SHARP CORNERS AND EDGES
FINISH MAX .03 MIN .005

UNLESS OTHERWISE SPECIFIED DIMENSIONS ARE IN INCHES
DIMENSIONS IN [ ] ARE MILLIMETERS EQUIV. FOR REF. ONLY
INTERPRET DRAWING AS PER ANSI Y14.5 OR Y32.2

ESH&Q RISK LEVEL A-1
OUTSTANDING ECN'S

		DATE
DRWN BY	S. JARZABKOWSKI	01/31/2014
CHK BY	J.MALLEY	02/07/2014
ENG APP	S. BUDA	02/16/2014
SUPV APP	G. GANETIS	02/11/2014
QA APP	E.CHESWICK	02/07/2014
ESH APP	R. LEE	02/10/2014

WIRING DIAGRAM,
STORAGE RING PPS I/O BOX 18
TYPE 2 A CHAIN & B CHAIN

LT-EL-SR-EI (DRAWING DIRECTORY) | LT-EL-SR-EI-PPS-0218-90 (DRAWING NUMBER) | C (REV)

WBS #1.03.06.01.03 | SCALE: N/A | SHEET 1 OF 49

JOB NUMBER | USED ON DWG. NO.

LT-EL-SR-EI-PPS-0218-90

REV	DESCRIPTION	DATE	BY	CHECKED	APP
	SEE SHEET 1				

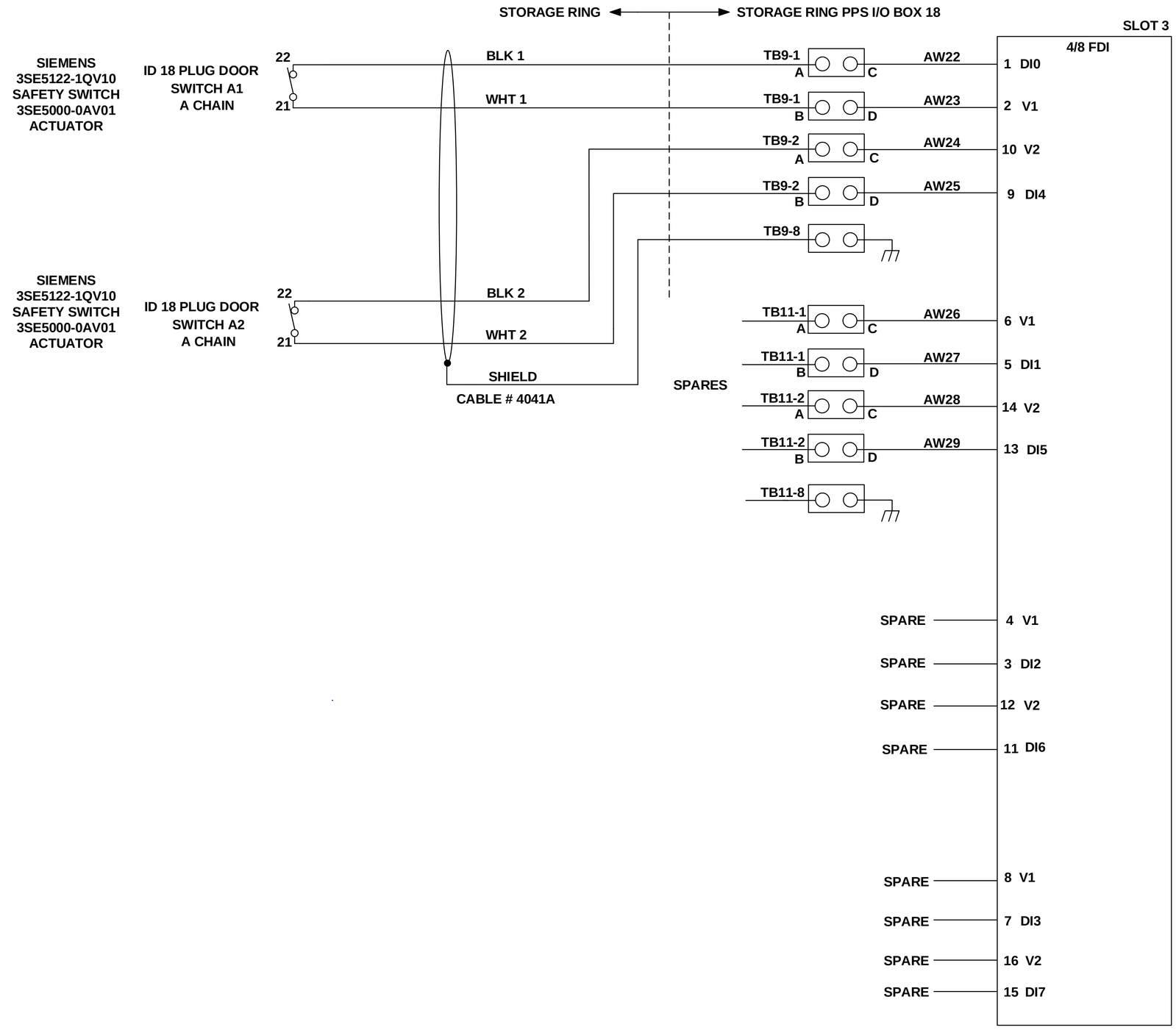

COMMON GROUP

A

LT-EL-SR-EI DRAWING DIRECTORY	LT-EL-SR-EI-PPS-0218-90 DRAWING NUMBER	C REV
COMPUTER REPRODUCABLE	SCALE: N/A	SHEET 2 OF 49

LT-EL-SR-EI-PPS-0218-90

REV	DESCRIPTION	DATE	BY	CHECKED	APP
	SEE SHEET 1				

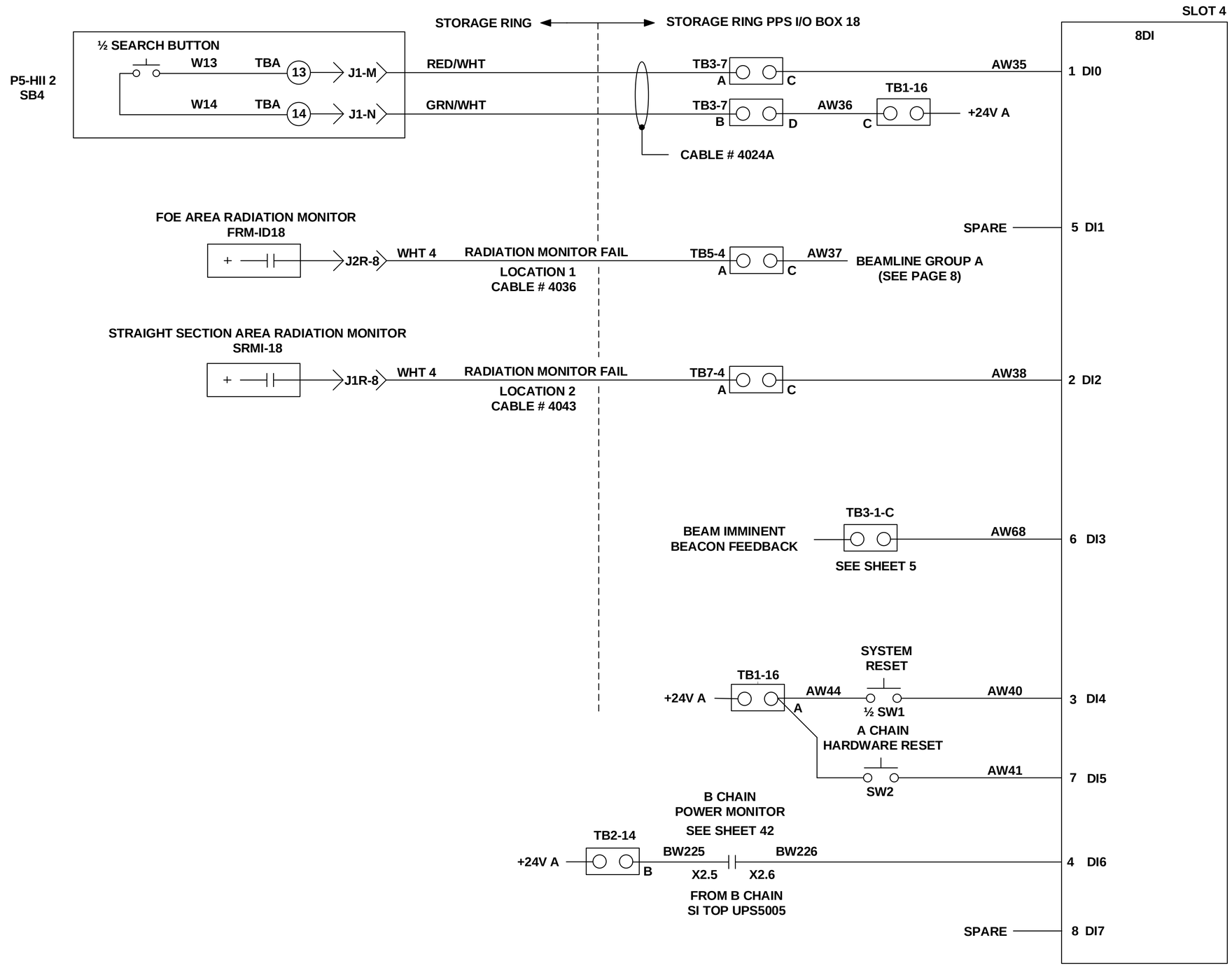

COMMON GROUP

A

LT-EL-SR-EI DRAWING DIRECTORY	LT-EL-SR-EI-PPS-0218-90 DRAWING NUMBER	C REV
COMPUTER REPRODUCABLE	SCALE: N/A	SHEET 3 OF 49

LT-EL-SR-EI-PPS-0218-90

REV	DESCRIPTION	DATE	BY	CHECKED	APP
	SEE SHEET 1				

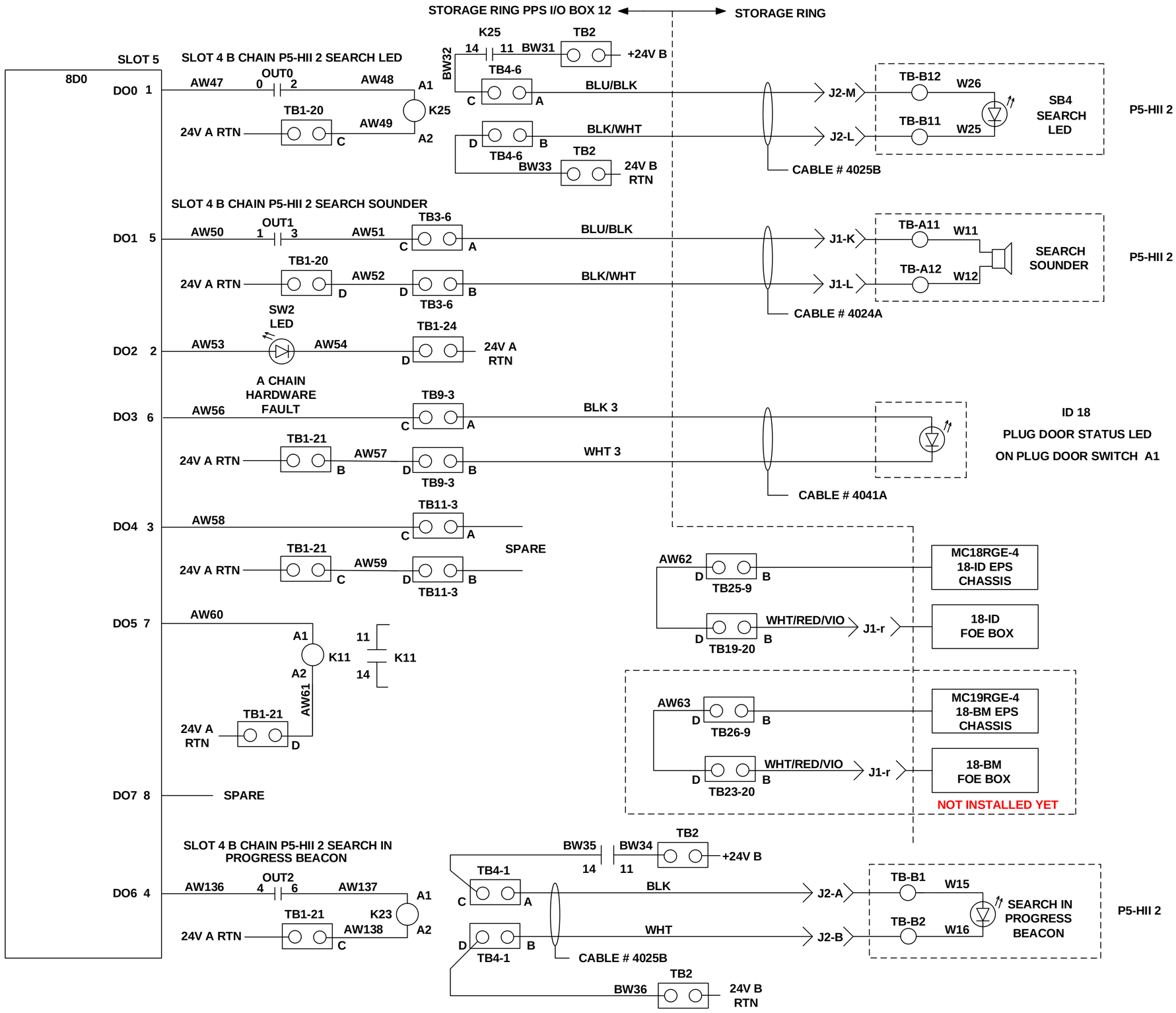

COMMON GROUP

A

LT-EL-SR-EI (DRAWING DIRECTORY)	LT-EL-SR-EI-PPS-0218-90 (DRAWING NUMBER)	C (REV)
COMPUTER REPRODUCABLE	SCALE: N/A	SHEET 4 OF 49

LT-EL-SR-EI-PPS-0218-90

REV	DESCRIPTION	DATE	BY	CHECKED	APP
	SEE SHEET 1				

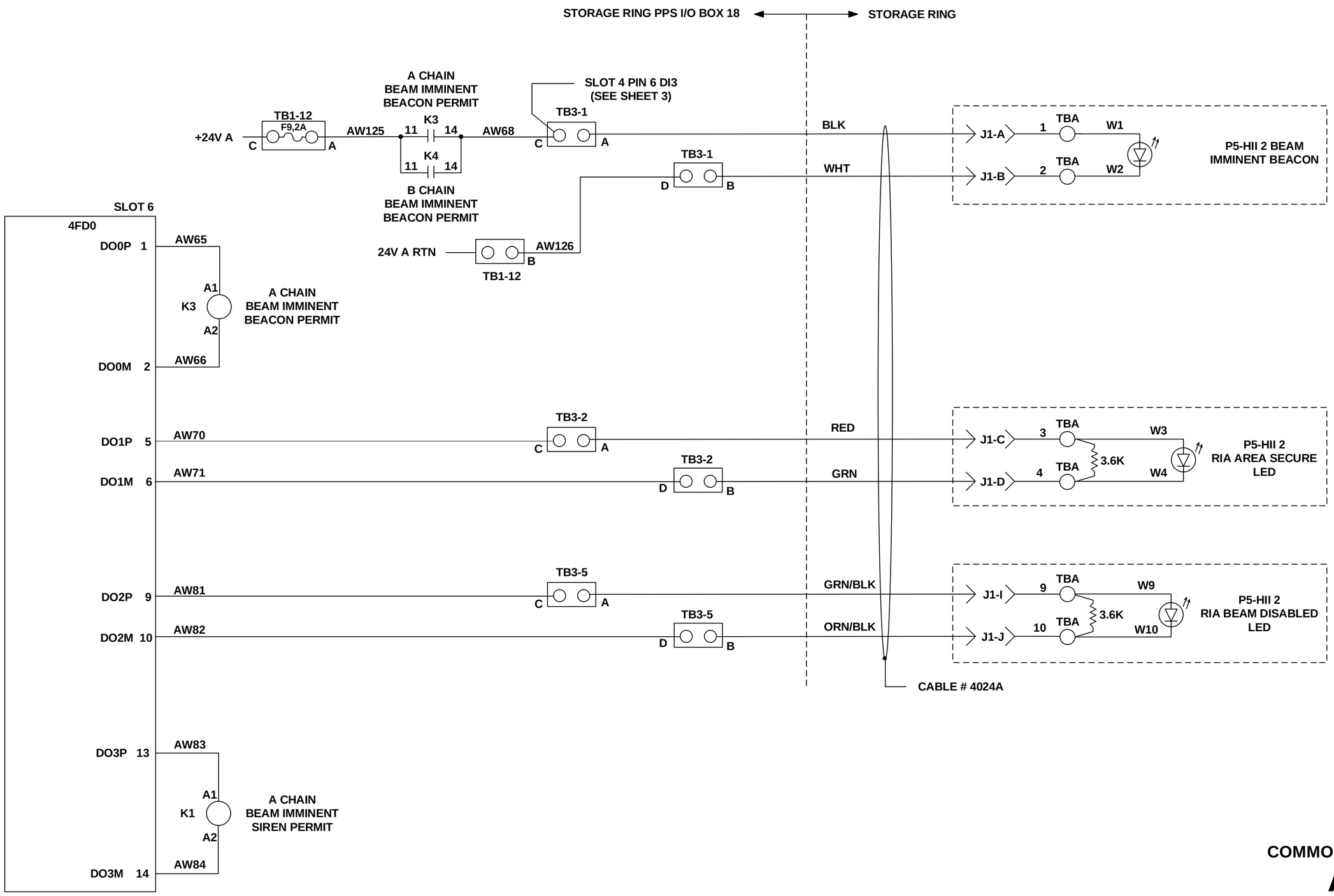

COMMON GROUP

A

LT-EL-SR-EI	LT-EL-SR-EI-PPS-0218-90	C
DRAWING DIRECTORY	DRAWING NUMBER	REV

COMPUTER REPRODUCABLE | SCALE: N/A | SHEET 5 OF 49

LT-EL-SR-EI-PPS-0218-90

REV	DESCRIPTION	DATE	BY	CHECKED	APP
	SEE SHEET 1				

SHEET LEFT BLANK
FOR FUTURE DATA

LT-EL-SR-EI-PPS-0218-90

LT-EL-SR-EI DRAWING DIRECTORY	LT-EL-SR-EI-PPS-0218-90 DRAWING NUMBER	C REV
COMPUTER REPRODUCABLE	SCALE: N/A	SHEET 6 OF 49

REV	DESCRIPTION	DATE	BY	CHECKED	APP
	SEE SHEET 1				

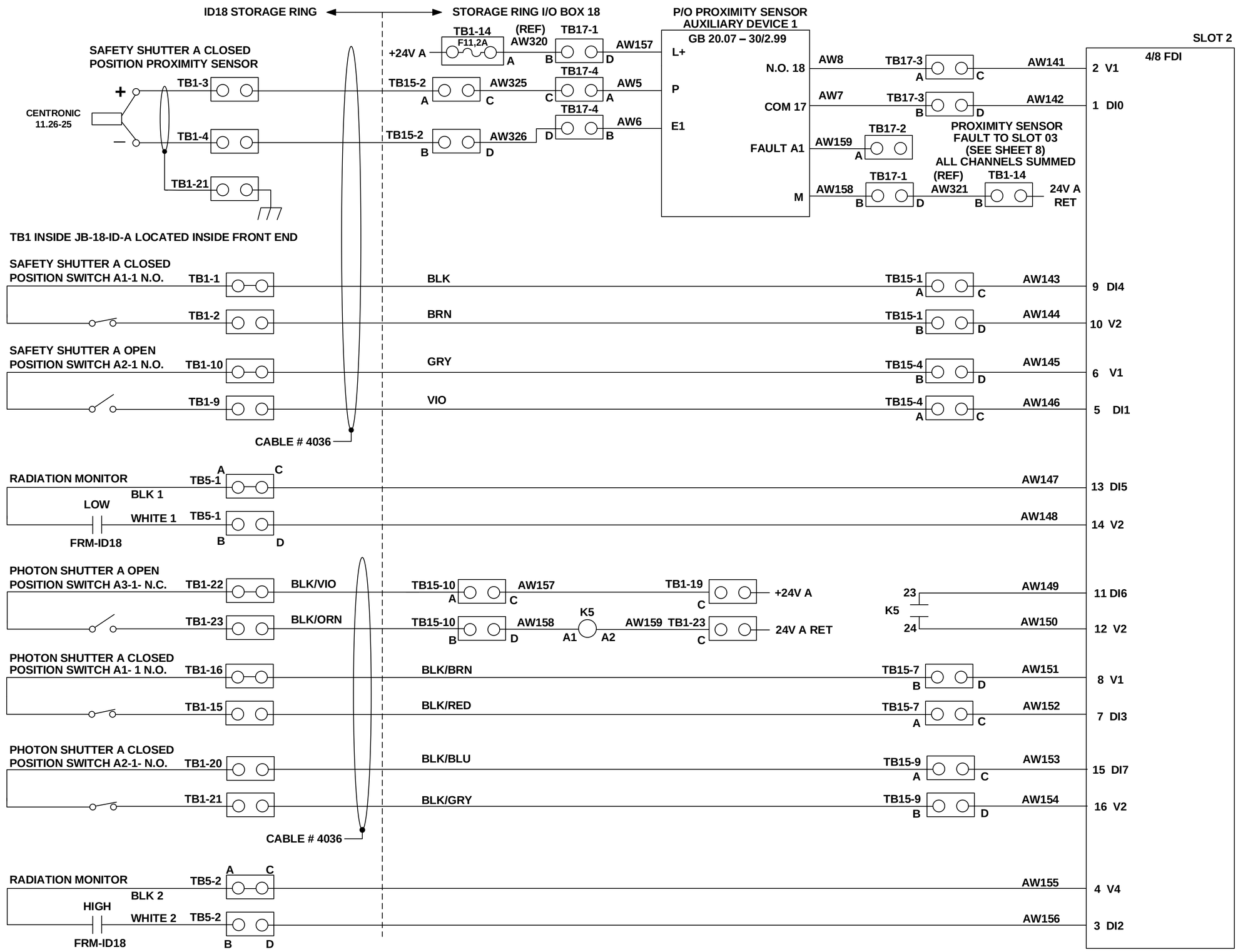

18-ID
ID BEAMLINE GROUP
A

LT-EL-SR-EI (DRAWING DIRECTORY)	LT-EL-SR-EI-PPS-0218-90 (DRAWING NUMBER)	C (REV)
COMPUTER REPRODUCABLE	SCALE: N/A	SHEET 7 OF 49

LT-EL-SR-EI-PPS-0218-90

REV	DESCRIPTION	DATE	BY	CHECKED	APP
	SEE SHEET 1				

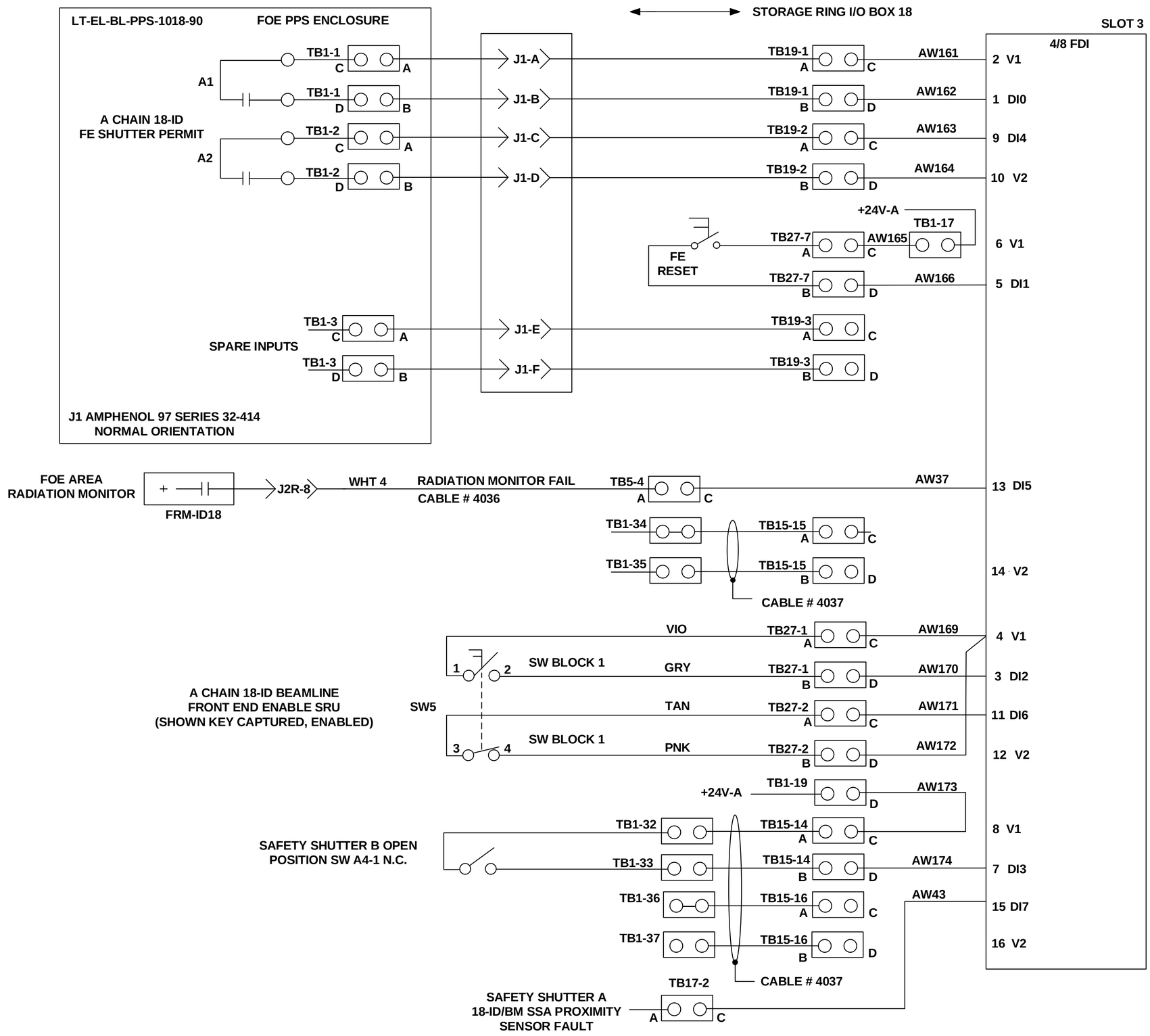

18-ID
ID BEAMLINE GROUP
A

LT-EL-SR-EI-PPS-0218-90

LT-EL-SR-EI (DRAWING DIRECTORY)	LT-EL-SR-EI-PPS-0218-90 (DRAWING NUMBER)	C (REV)
COMPUTER REPRODUCABLE	SCALE: N/A	SHEET 8 OF 49

REV	DESCRIPTION	DATE	BY	CHECKED	APP
	SEE SHEET 1				

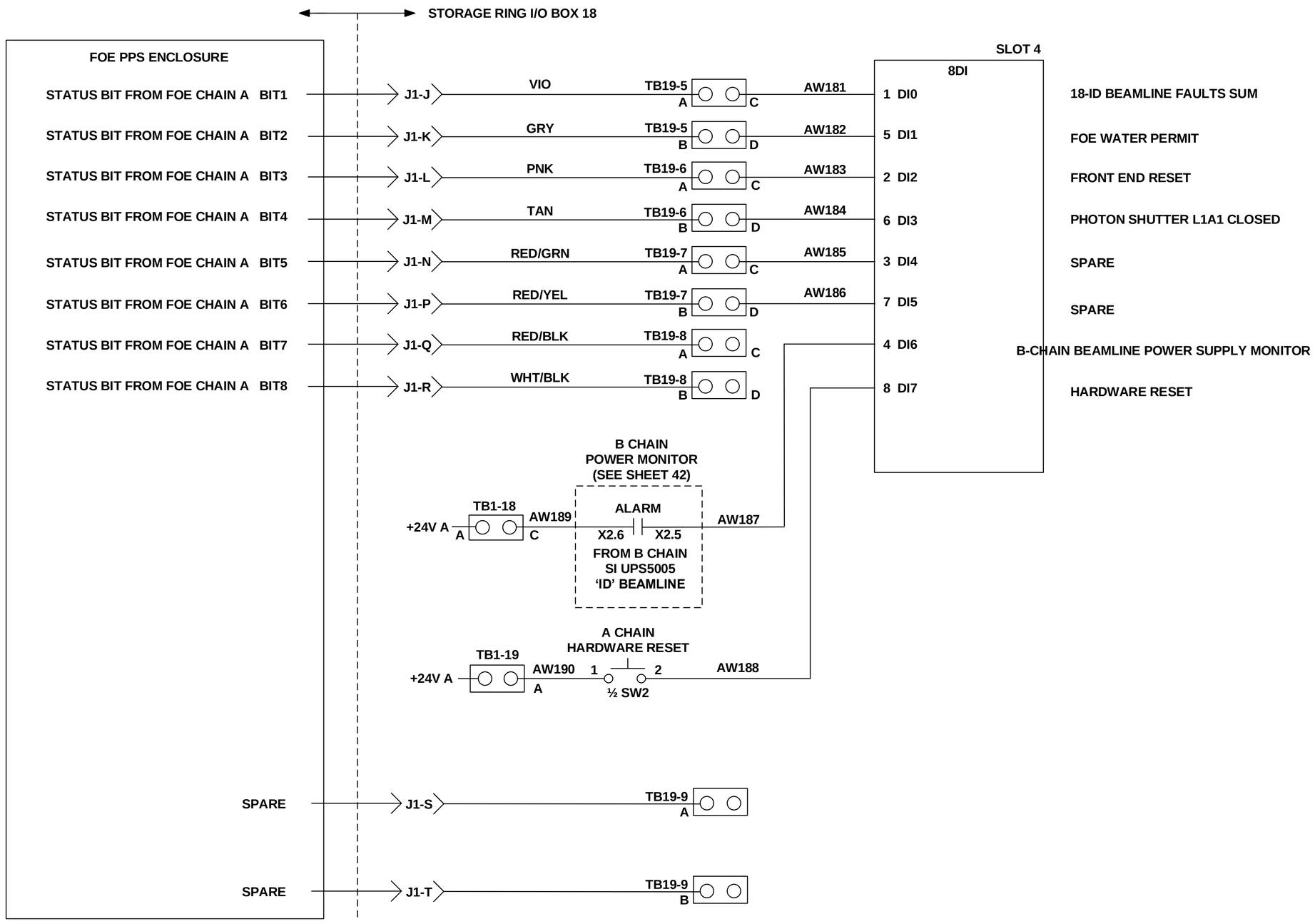

18-ID
ID BEAMLINE GROUP
A

LT-EL-SR-EI (DRAWING DIRECTORY)	LT-EL-SR-EI-PPS-0218-90 (DRAWING NUMBER)	C (REV)
COMPUTER REPRODUCABLE	SCALE: N/A	SHEET 9 OF 49

LT-EL-SR-EI-PPS-0218-90

REV	DESCRIPTION	DATE	BY	CHECKED	APP
	SEE SHEET 1				

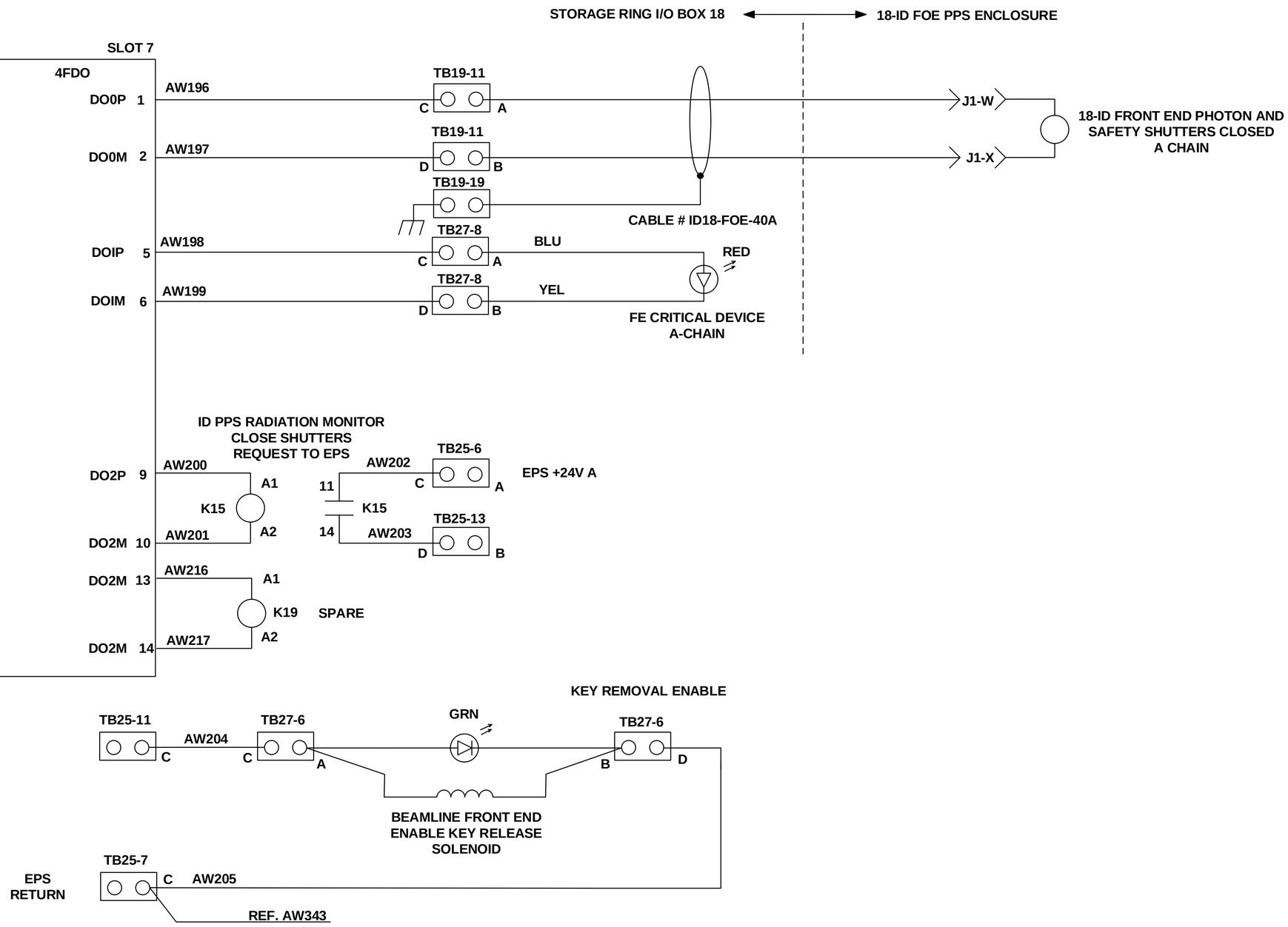

18-ID
ID BEAMLINE GROUP
A

LT-EL-SR-EI (DRAWING DIRECTORY)	LT-EL-SR-EI-PPS-0218-90 (DRAWING NUMBER)	C (REV)
COMPUTER REPRODUCABLE	SCALE: N/A	SHEET 10 OF 49

LT-EL-SR-EI-PPS-0218-90

REV	DESCRIPTION	DATE	BY	CHECKED	APP
	SEE SHEET 1				

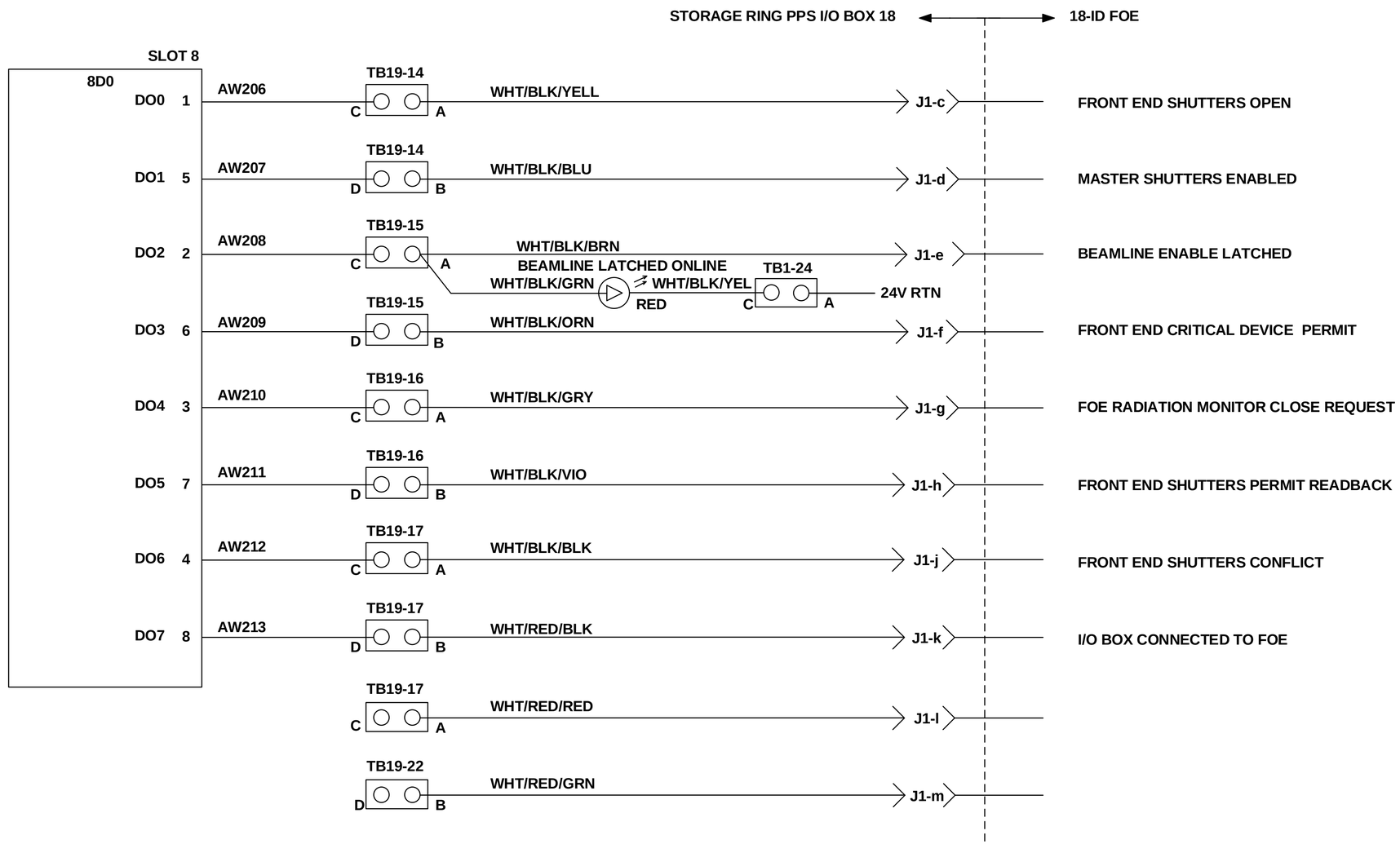

18-ID
ID BEAMLINE GROUP

A

LT-EL-SR-EI-PPS-0218-90

LT-EL-SR-EI (DRAWING DIRECTORY)	LT-EL-SR-EI-PPS-0218-90 (DRAWING NUMBER)	C (REV)
COMPUTER REPRODUCABLE	SCALE: N/A	SHEET 11 OF 49

REV	DESCRIPTION	DATE	BY	CHECKED	APP
	SEE SHEET 1				

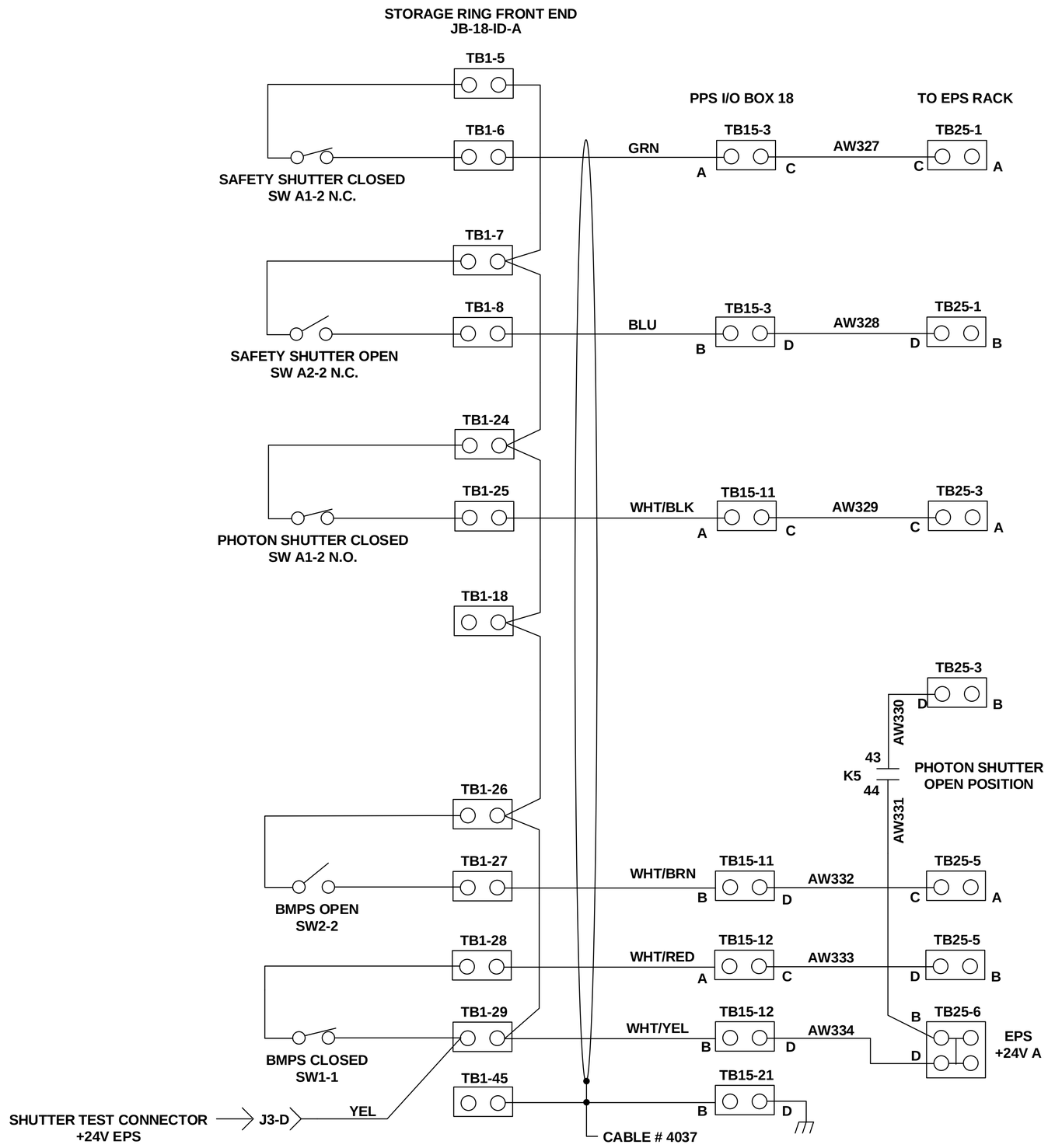

18-ID
ID BEAMLINE GROUP
A

LT-EL-SR-EI (DRAWING DIRECTORY)	LT-EL-SR-EI-PPS-0218-90 (DRAWING NUMBER)	C (REV)
COMPUTER REPRODUCABLE	SCALE: N/A	SHEET 12 OF 49

LT-EL-SR-EI-PPS-0218-90

REV	DESCRIPTION	DATE	BY	CHECKED	APP
	SEE SHEET 1				

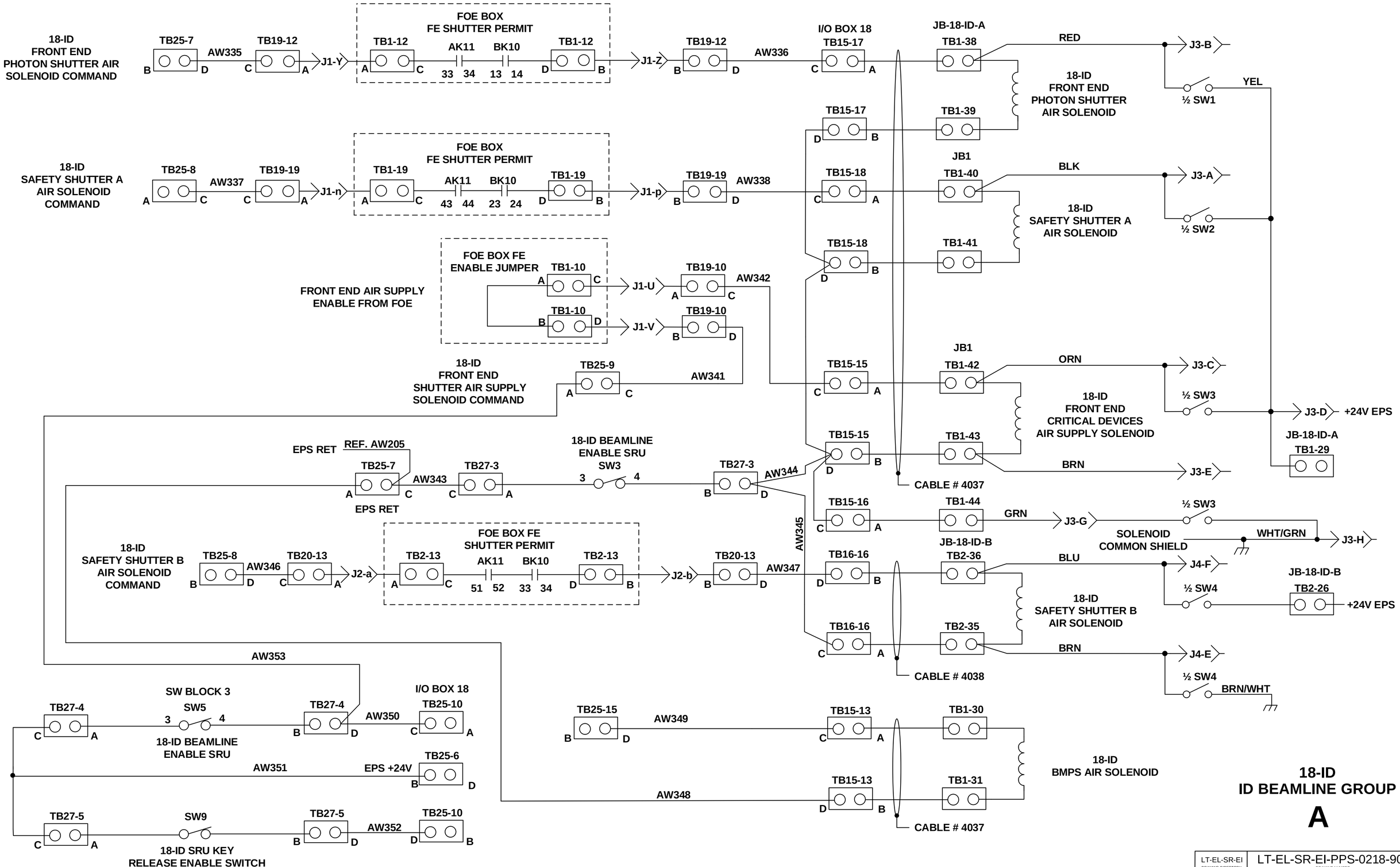

LT-EL-SR-EI DRAWING DIRECTORY	LT-EL-SR-EI-PPS-0218-90 DRAWING NUMBER	C REV
COMPUTER REPRODUCABLE	SCALE: N/A	SHEET 13 OF 49

LT-EL-SR-EI-PPS-0218-90

REV	DESCRIPTION	DATE	BY	CHECKED	APP
	SEE SHEET 1				

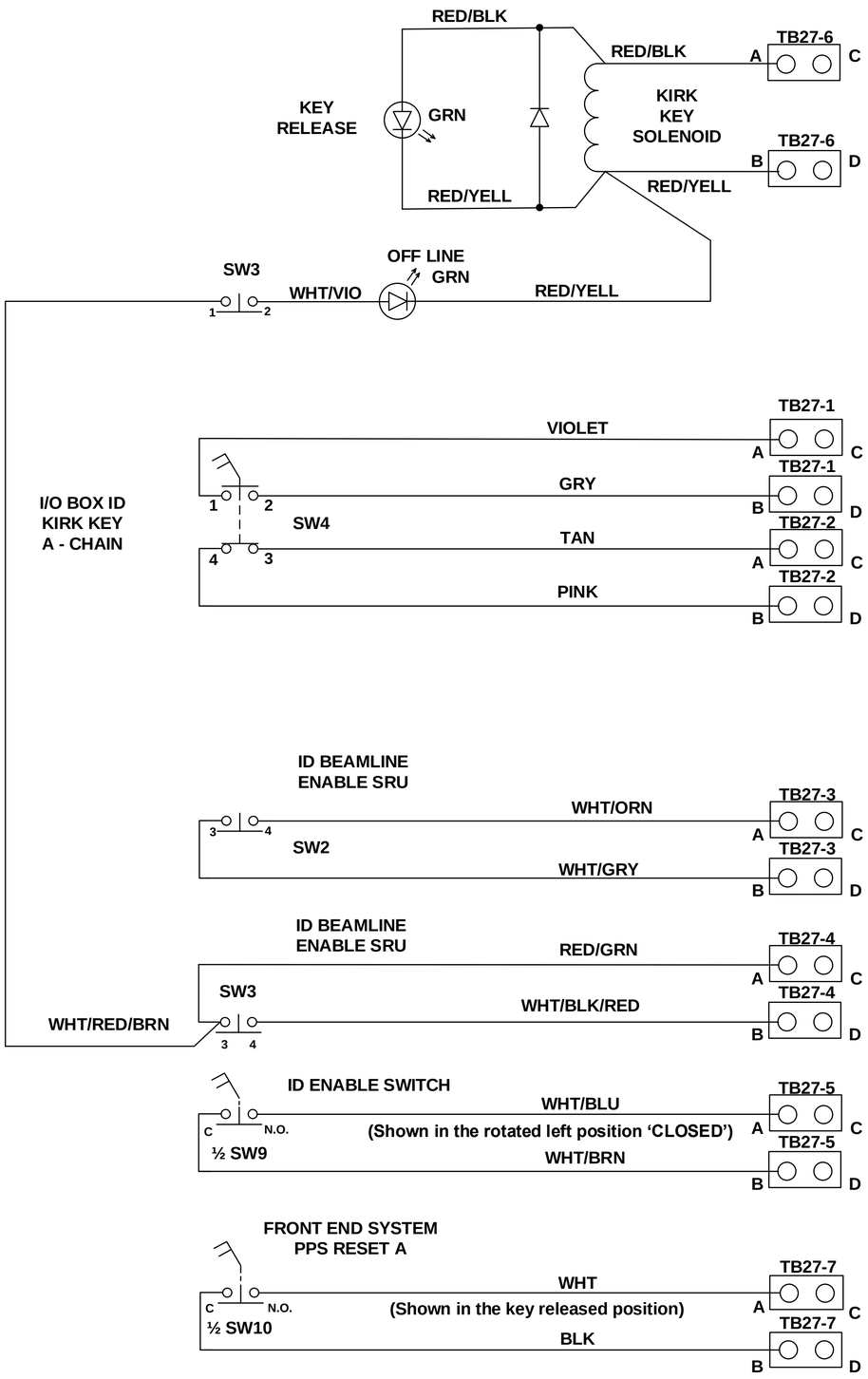

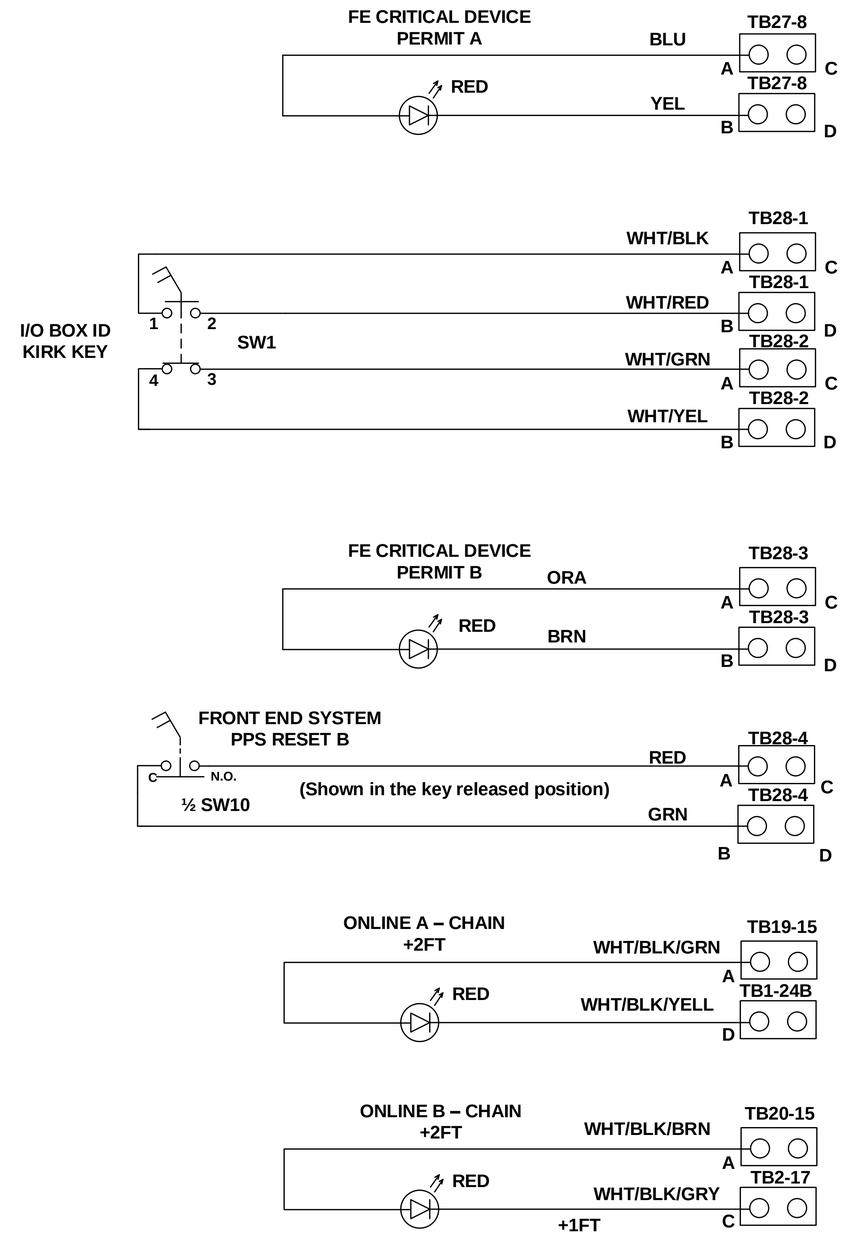

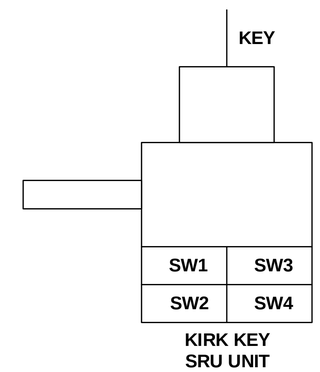

PIGTAIL
TB 27 A- CHAIN 46" LONG
TB28 B – CHAIN 36" LONG

ID ½ BEAMLINE ENABLE PANEL

A

LT-EL-SR-EI (DRAWING DIRECTORY)	LT-EL-SR-EI-PPS-0218-90 (DRAWING NUMBER)	C (REV)
COMPUTER REPRODUCABLE	SCALE: N/A	SHEET 14 OF 49

LT-EL-SR-EI-PPS-0218-90

REV	DESCRIPTION	DATE	BY	CHECKED	APP
	SEE SHEET 1				

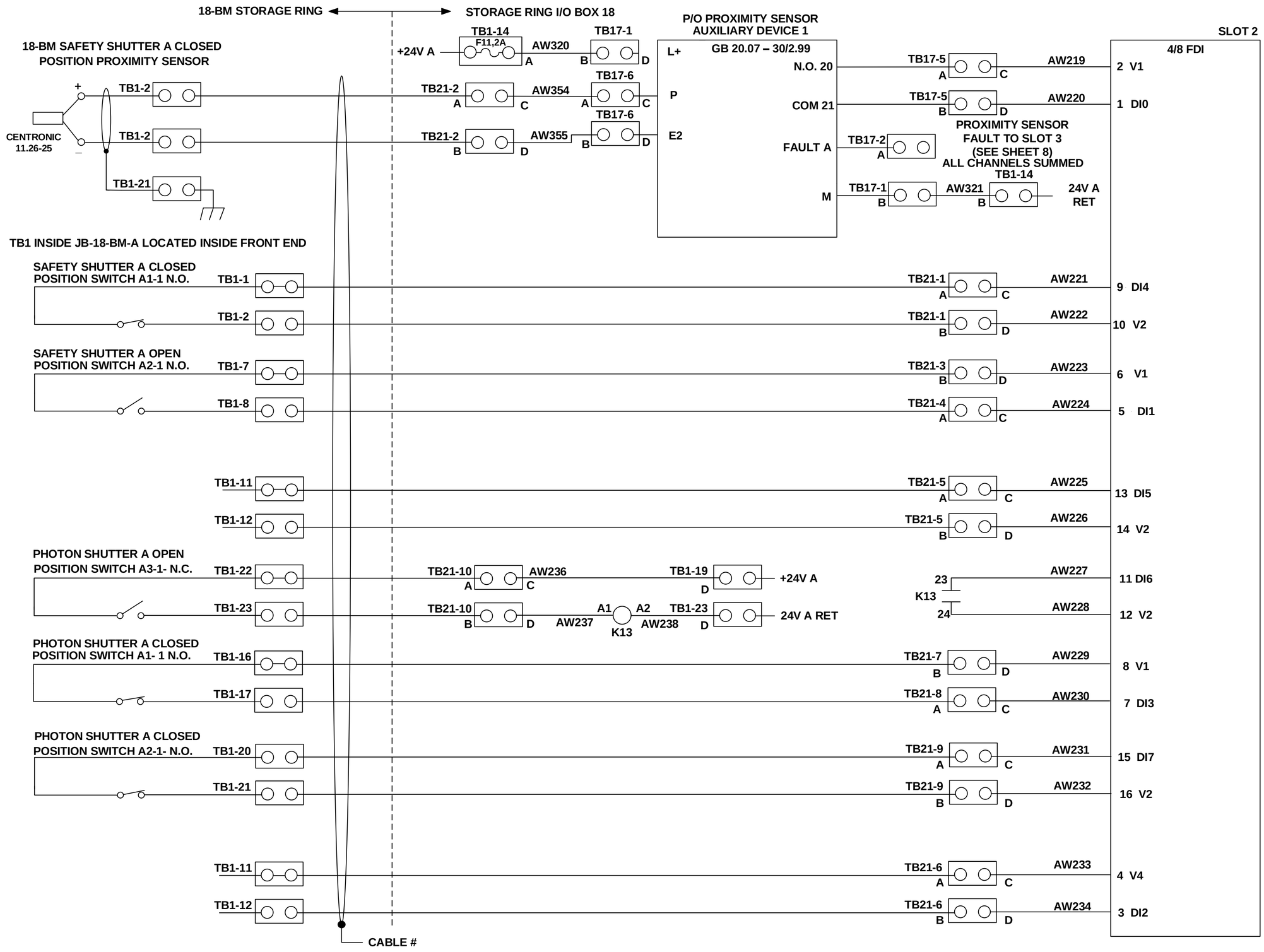

18-BM
BM BEAMLINE GROUP
A

LT-EL-SR-EI (DRAWING DIRECTORY)	LT-EL-SR-EI-PPS-0218-90 (DRAWING NUMBER)	C (REV)
COMPUTER REPRODUCABLE	SCALE: N/A	SHEET 15 OF 49

LT-EL-SR-EI-PPS-0218-90

REV	DESCRIPTION	DATE	BY	CHECKED	APP
	SEE SHEET 1				

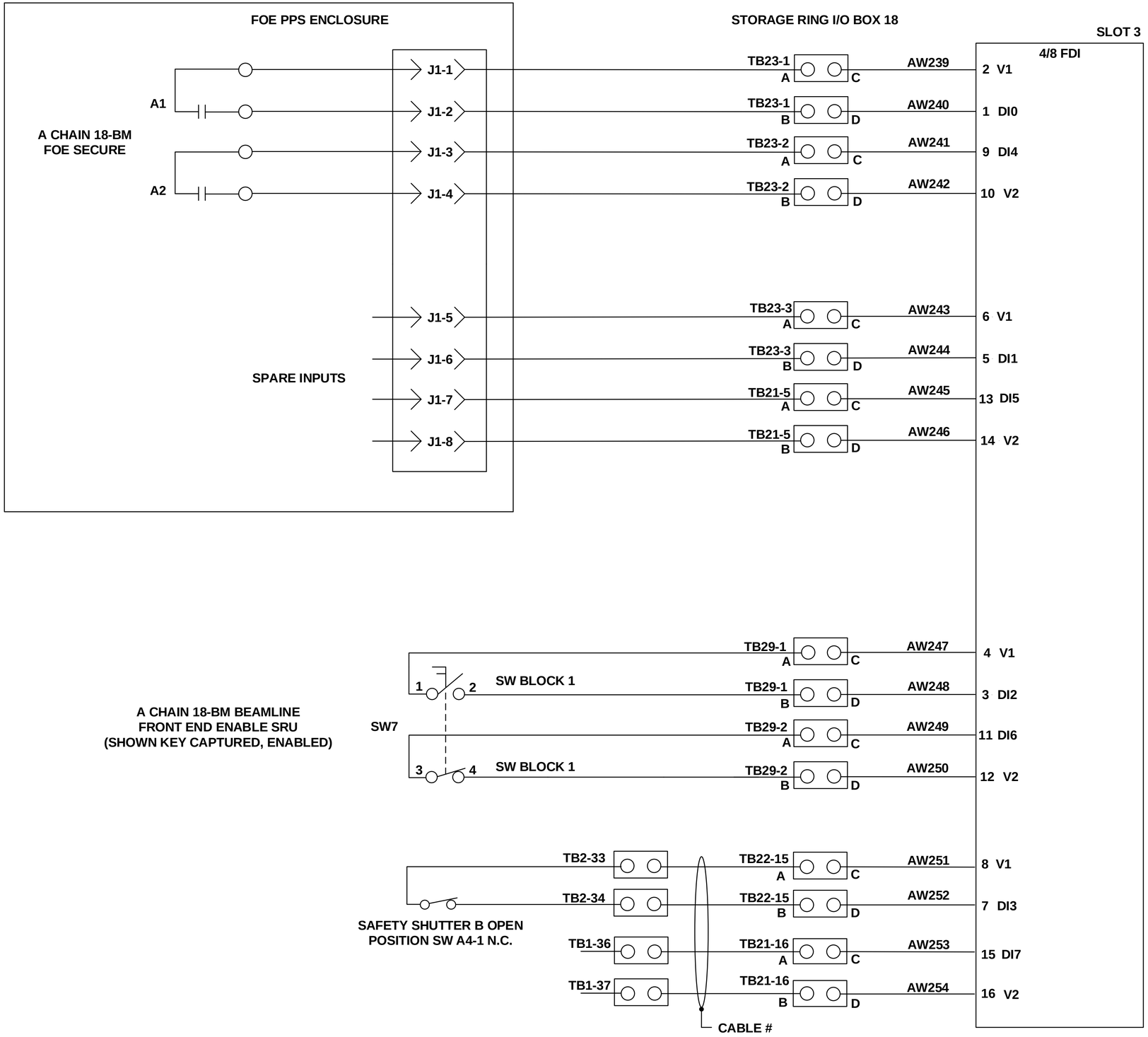

18-BM
BM BEAMLINE GROUP
A

LT-EL-SR-EI (DRAWING DIRECTORY)	LT-EL-SR-EI-PPS-0218-90 (DRAWING NUMBER)	C (REV)
COMPUTER REPRODUCABLE	SCALE: N/A	SHEET 16 OF 49

LT-EL-SR-EI-PPS-0218-90

REV	DESCRIPTION	DATE	BY	CHECKED	APP
	SEE SHEET 1				

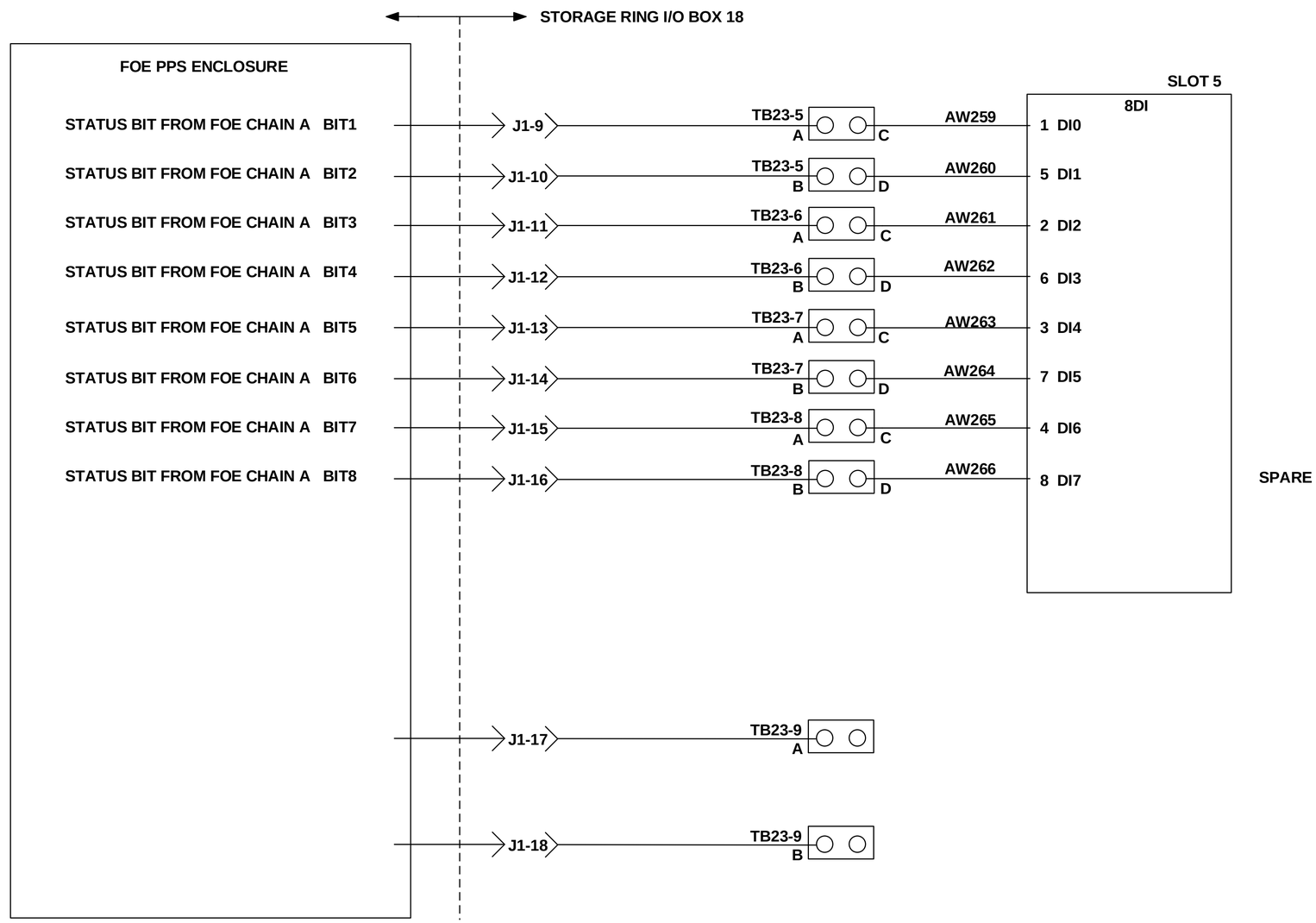

18-BM
BM BEAMLINE GROUP
A

LT-EL-SR-EI (DRAWING DIRECTORY)	LT-EL-SR-EI-PPS-0218-90 (DRAWING NUMBER)	C (REV)
COMPUTER REPRODUCABLE	SCALE: N/A	SHEET 17 OF 49

LT-EL-SR-EI-PPS-0218-90

REV	DESCRIPTION	DATE	BY	CHECKED	APP
	SEE SHEET 1				

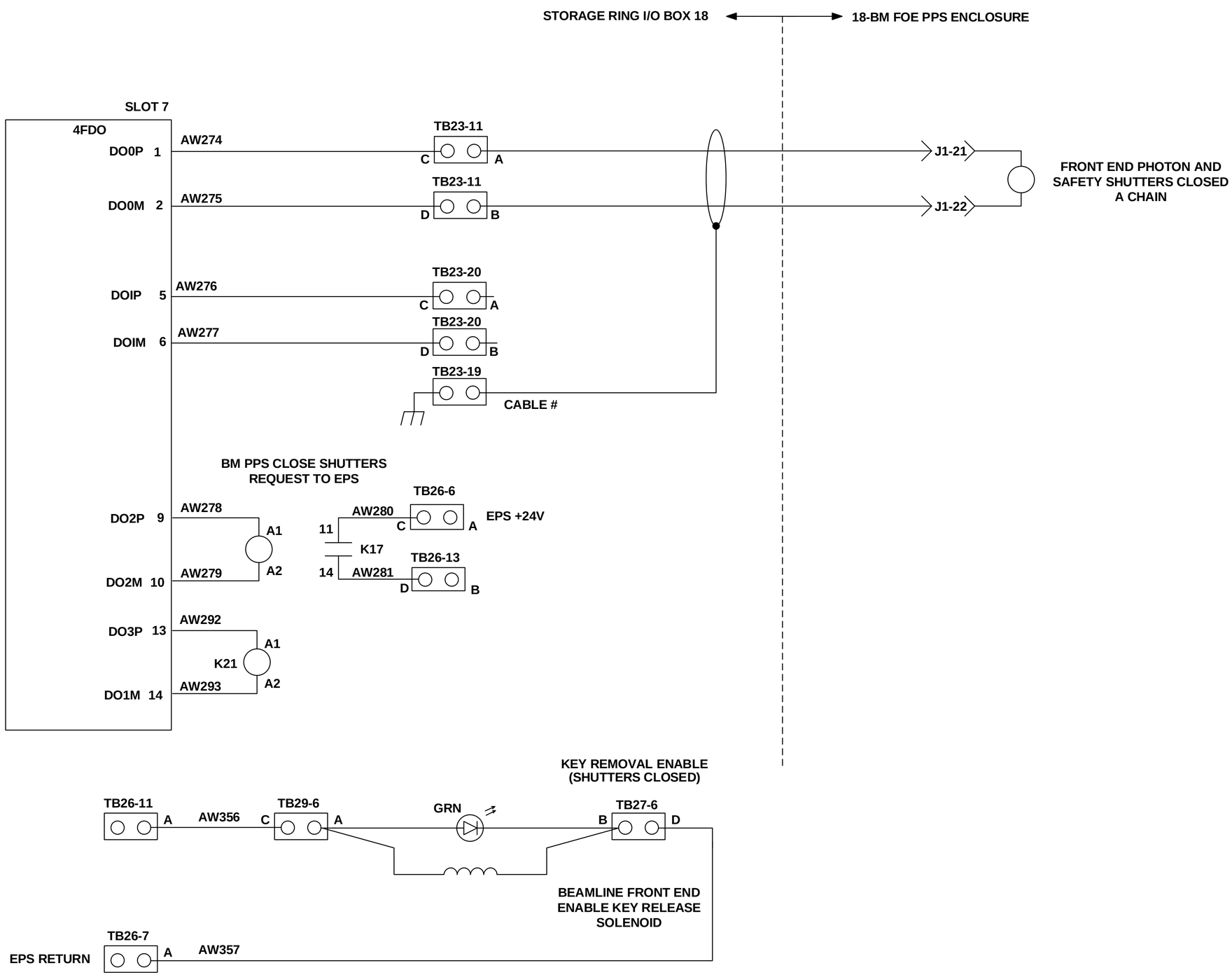

18-BM
BM BEAMLINE GROUP

A

LT-EL-SR-EI DRAWING DIRECTORY	LT-EL-SR-EI-PPS-0218-90 DRAWING NUMBER	C REV
COMPUTER REPRODUCABLE	SCALE: N/A	SHEET 18 OF 49

LT-EL-SR-EI-PPS-0218-90

REV	DESCRIPTION	DATE	BY	CHECKED	APP
	SEE SHEET 1				

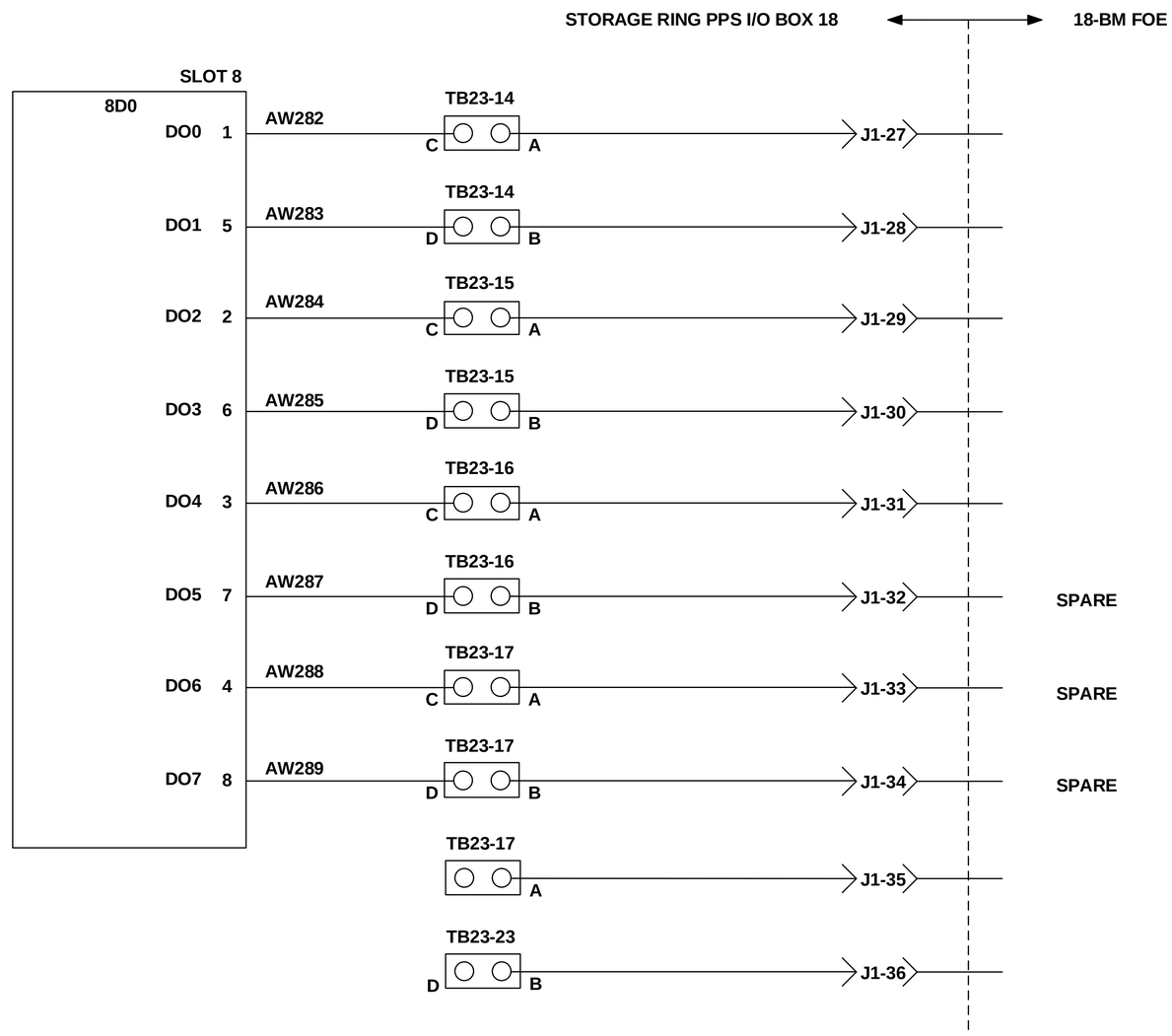

18-BM
BM BEAMLINE GROUP
A

LT-EL-SR-EI (DRAWING DIRECTORY)	LT-EL-SR-EI-PPS-0218-90 (DRAWING NUMBER)	C (REV)
COMPUTER REPRODUCABLE	SCALE: N/A	SHEET 19 OF 49

LT-EL-SR-EI-PPS-0218-90

REV	DESCRIPTION	DATE	BY	CHECKED	APP
	SEE SHEET 1				

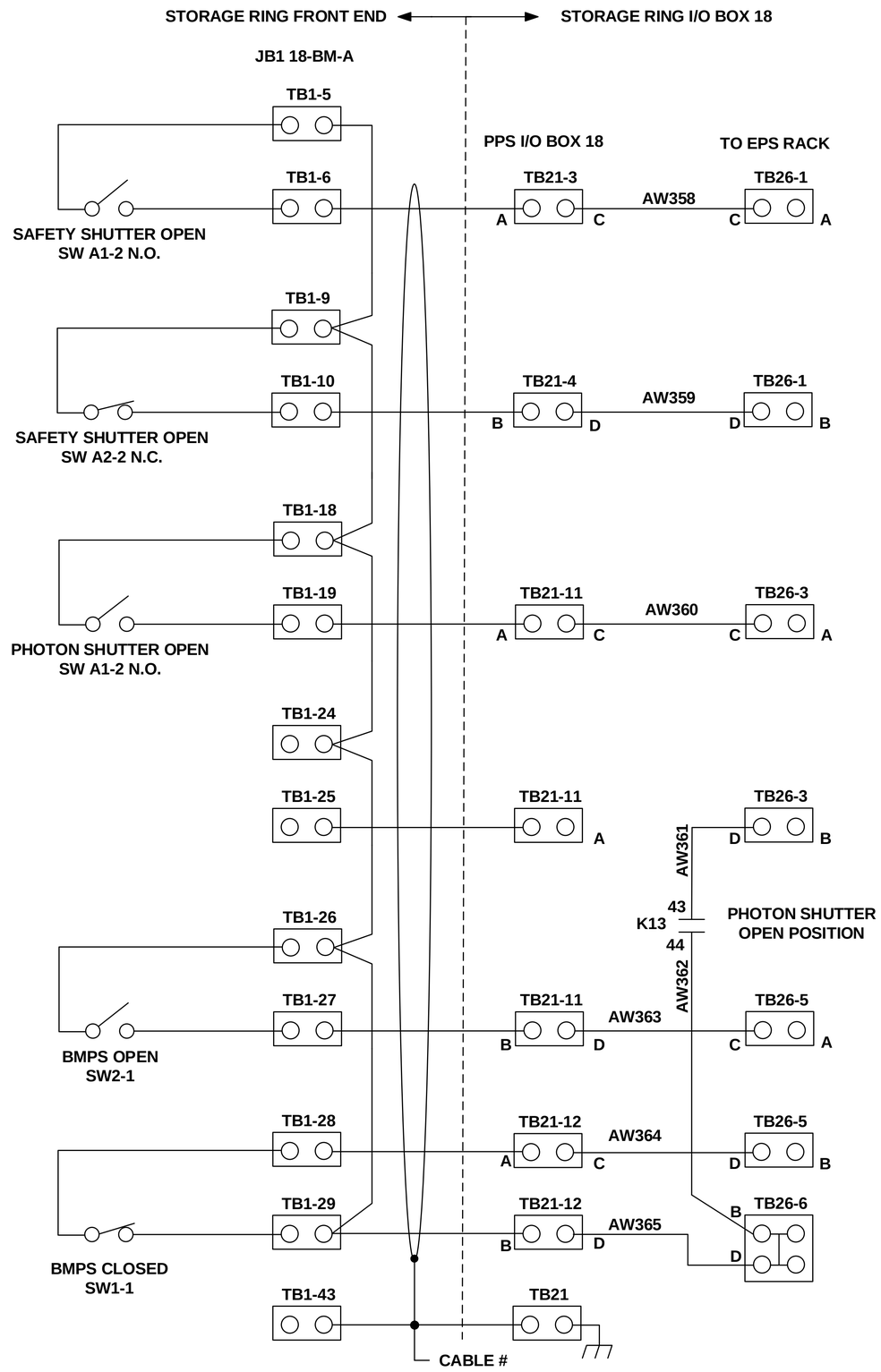

18-BM

BM BEAMLINE GROUP

A

LT-EL-SR-EI (DRAWING DIRECTORY)	LT-EL-SR-EI-PPS-0218-90 (DRAWING NUMBER)	C (REV)
COMPUTER REPRODUCABLE	SCALE: N/A	SHEET 20 OF 49

LT-EL-SR-EI-PPS-0218-90

REV	DESCRIPTION	DATE	BY	CHECKED	APP
	SEE SHEET 1				

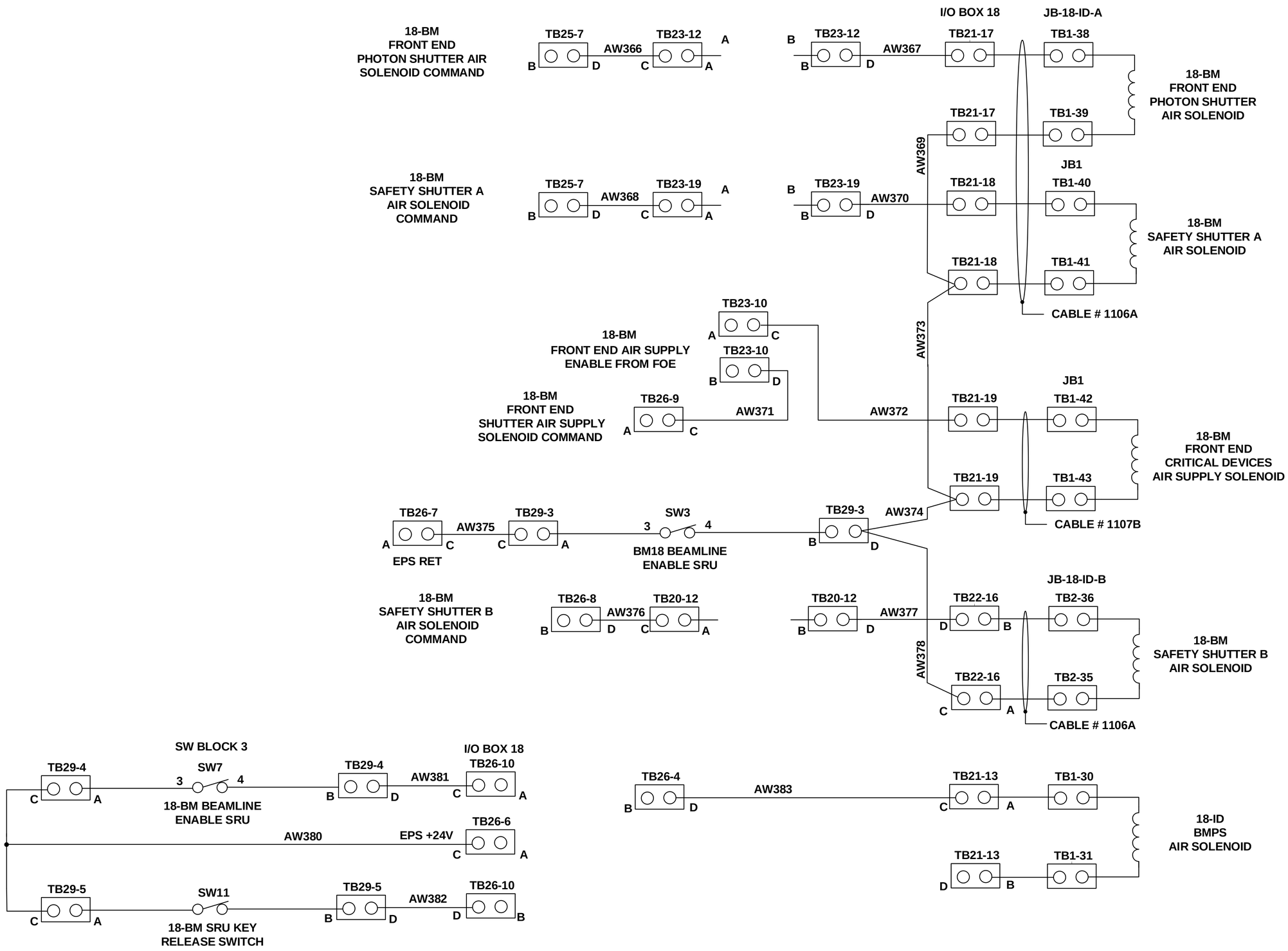

18-BM
BM BEAMLINE GROUP
A

LT-EL-SR-EI (DRAWING DIRECTORY)	LT-EL-SR-EI-PPS-0218-90 (DRAWING NUMBER)	C (REV)
COMPUTER REPRODUCABLE	SCALE: N/A	SHEET 21 OF 49

LT-EL-SR-EI-PPS-0218-90

REV	DESCRIPTION	DATE	BY	CHECKED	APP
	SEE SHEET 1				

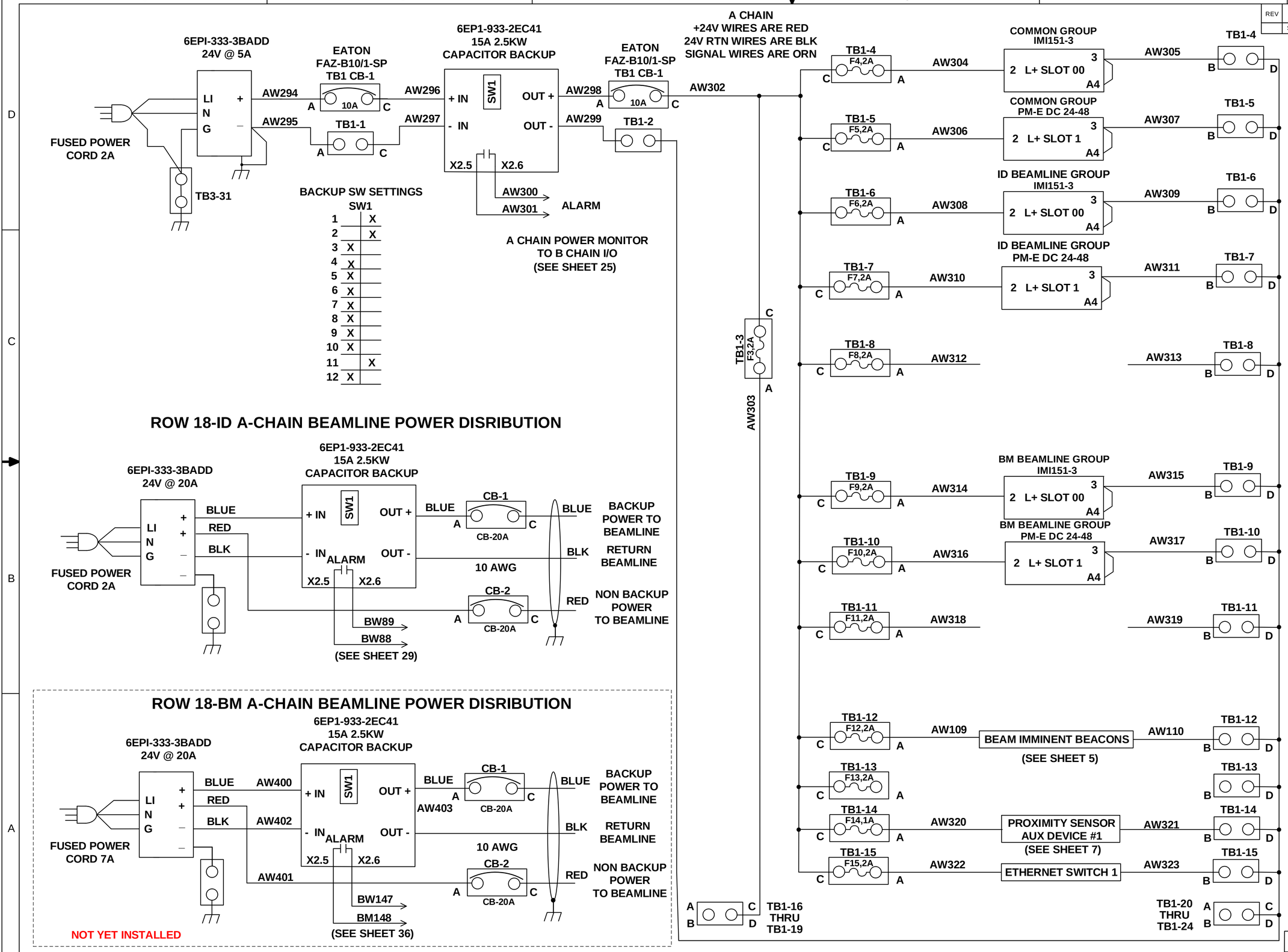

POWER DISTRIBUTION

A

LT-EL-SR-EI (DRAWING DIRECTORY)	LT-EL-SR-EI-PPS-0218-90 (DRAWING NUMBER)	C (REV)
COMPUTER REPRODUCABLE	SCALE: N/A	SHEET 22 OF 49

LT-EL-SR-EI-PPS-0218-90

REV	DESCRIPTION	DATE	BY	CHECKED	APP
	SEE SHEET 1				

SHEET LEFT BLANK
FOR FUTURE DATA

A

LT-EL-SR-EI DRAWING DIRECTORY	LT-EL-SR-EI-PPS-0218-90 DRAWING NUMBER	A REV
COMPUTER REPRODUCABLE	SCALE: N/A	SHEET 23 OF 49

LT-EL-SR-EI-PPS-0218-90

REV	DESCRIPTION	DATE	BY	CHECKED	APP
	SEE SHEET 1				

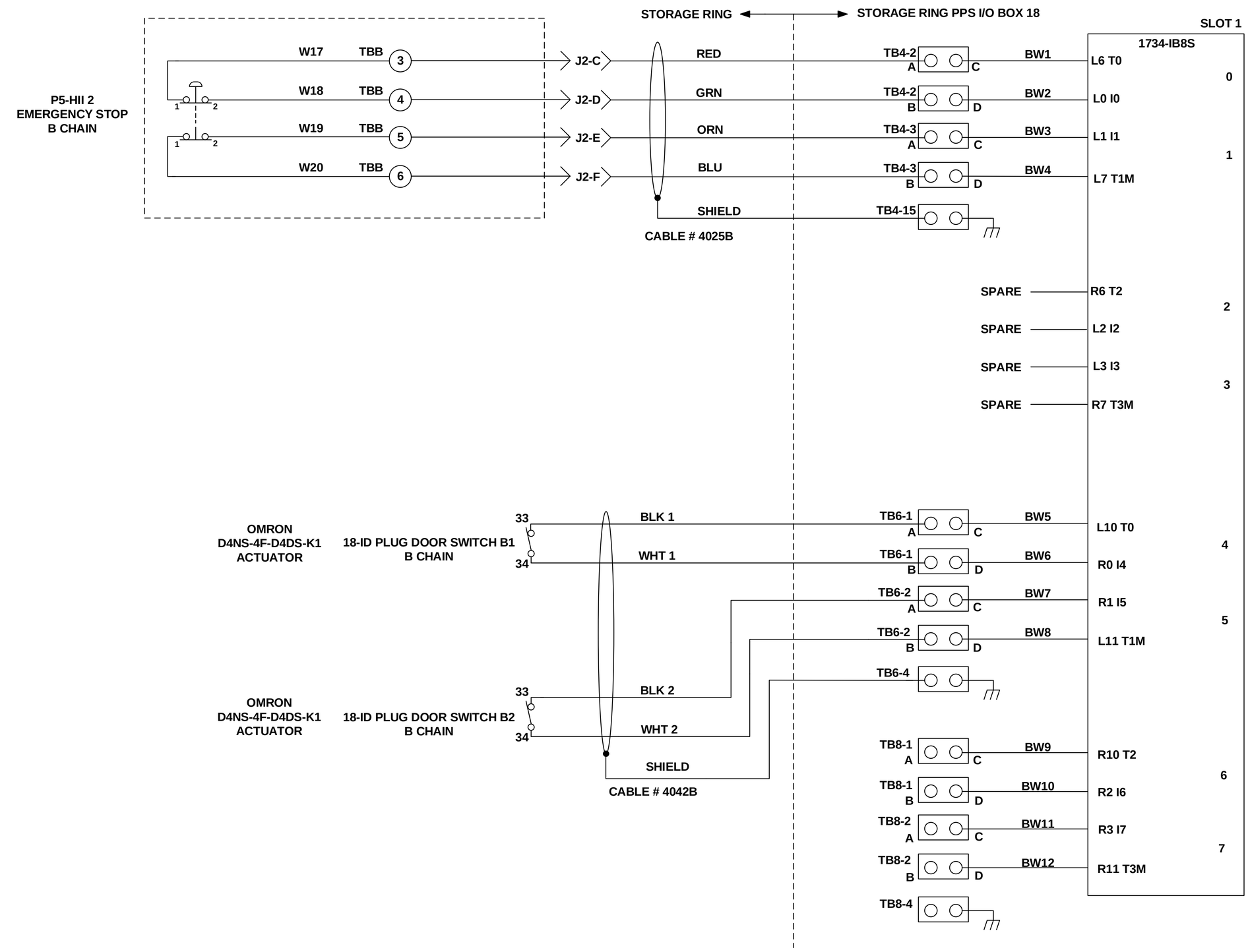

COMMON GROUP

B

LT-EL-SR-EI DRAWING DIRECTORY	LT-EL-SR-EI-PPS-0218-90 DRAWING NUMBER	A REV
COMPUTER REPRODUCABLE	SCALE: N/A	SHEET 24 OF 49

LT-EL-SR-EI-PPS-0218-90

REV	DESCRIPTION	DATE	BY	CHECKED	APP
	SEE SHEET 1				

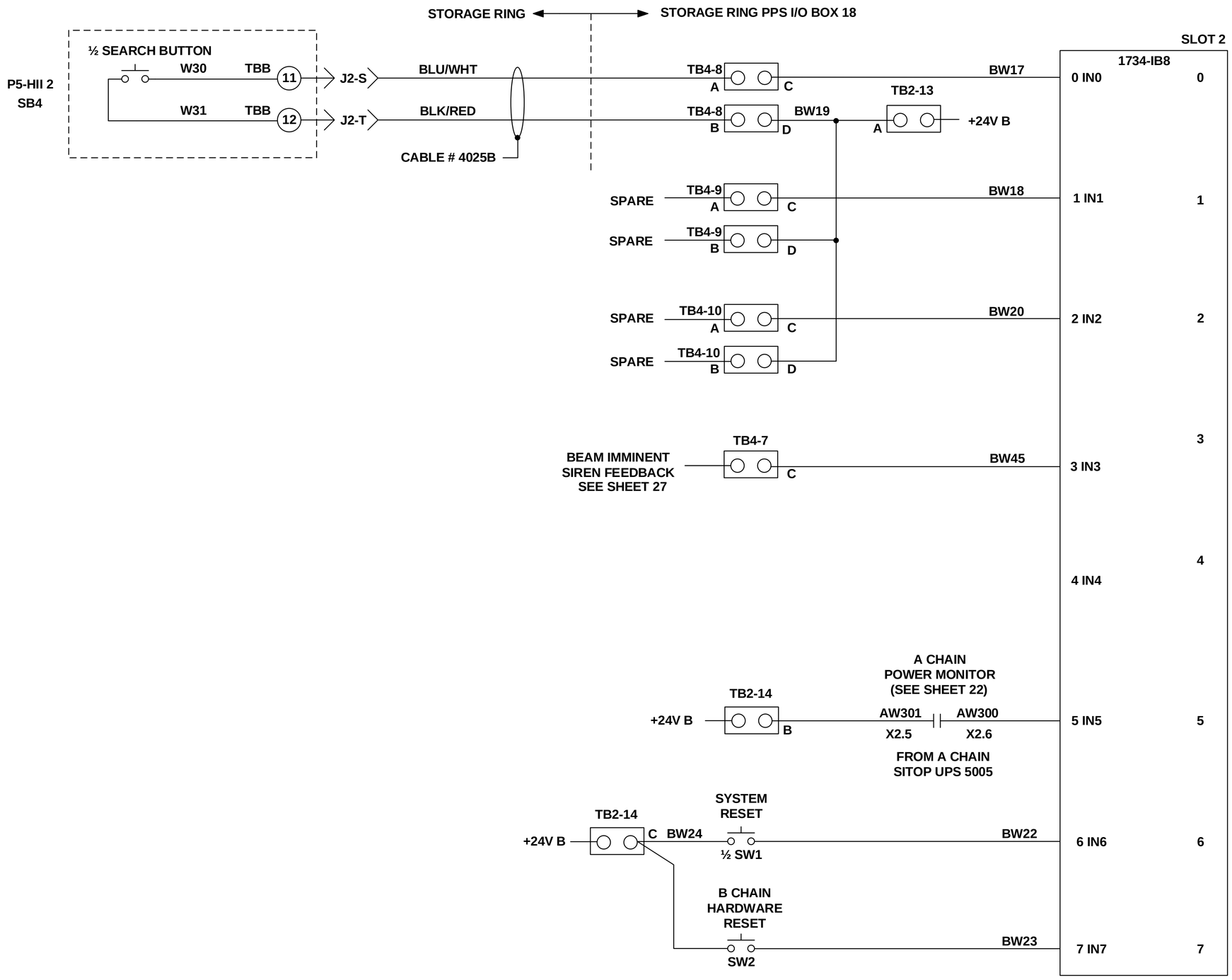

COMMON GROUP

B

LT-EL-SR-EI	LT-EL-SR-EI-PPS-0218-90	C
DRAWING DIRECTORY	DRAWING NUMBER	REV

COMPUTER REPRODUCABLE | SCALE: N/A | SHEET 25 OF 49

LT-EL-SR-EI-PPS-0218-90

REV	DESCRIPTION	DATE	BY	CHECKED	APP
	SEE SHEET 1				

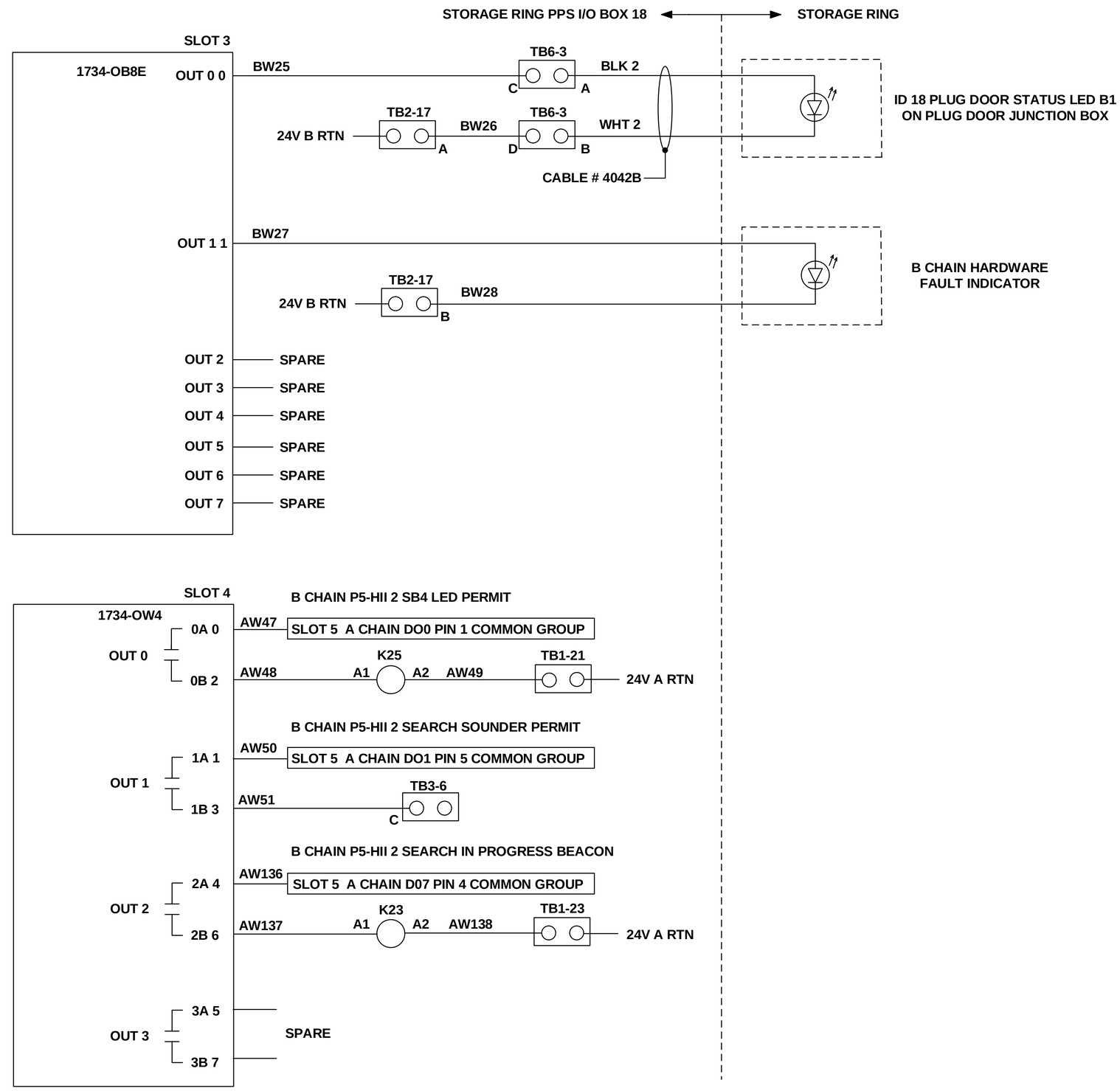

COMMON GROUP

B

LT-EL-SR-EI DRAWING DIRECTORY	LT-EL-SR-EI-PPS-0218-90 DRAWING NUMBER	C REV
COMPUTER REPRODUCABLE	SCALE: N/A	SHEET 26 OF 49

LT-EL-SR-EI-PPS-0218-90

REV	DESCRIPTION	DATE	BY	CHECKED	APP
	SEE SHEET 1				

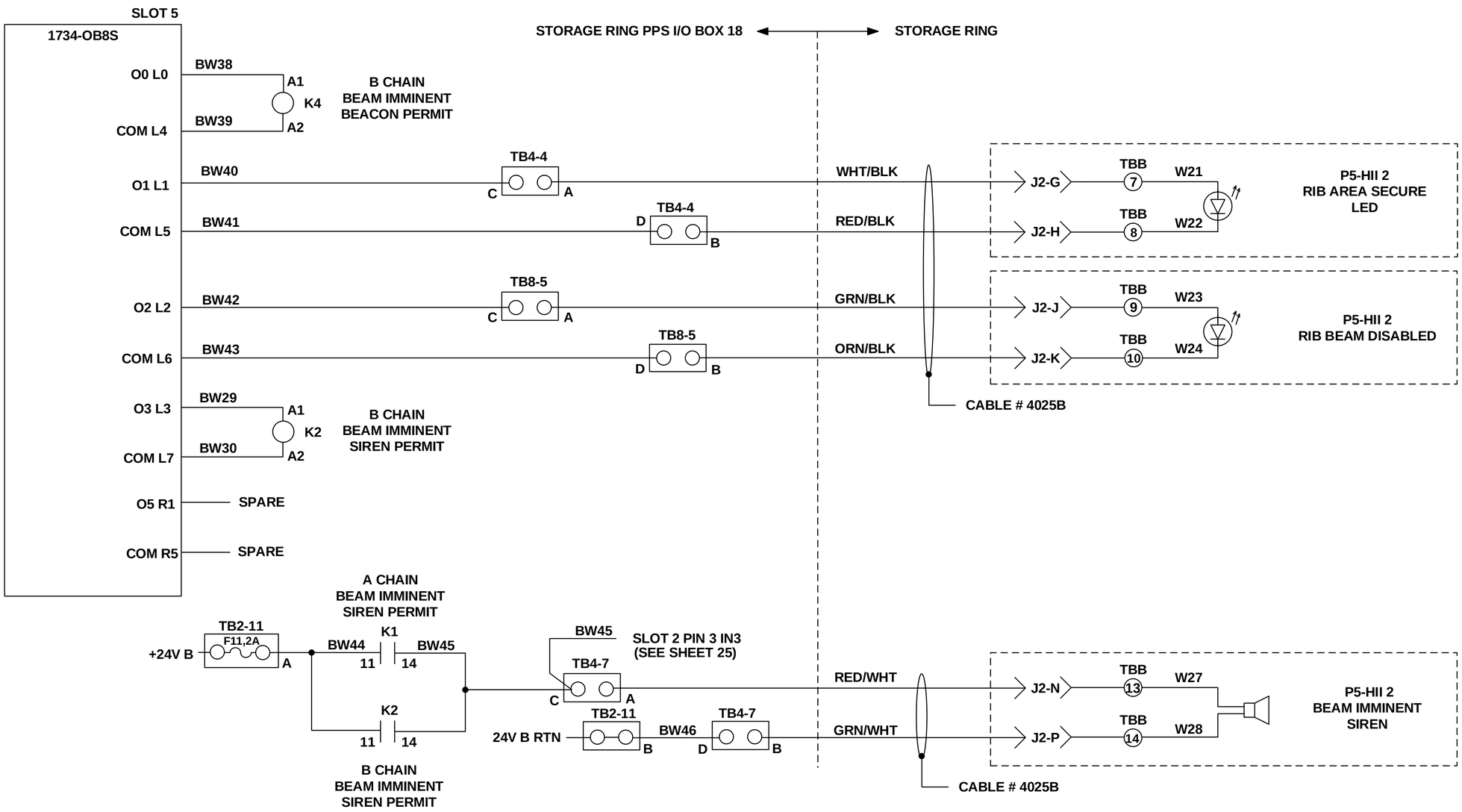

COMMON GROUP

B

LT-EL-SR-EI (DRAWING DIRECTORY)	LT-EL-SR-EI-PPS-0218-90 (DRAWING NUMBER)	C (REV)
COMPUTER REPRODUCABLE	SCALE: N/A	SHEET 27 OF 49

LT-EL-SR-EI-PPS-0218-90

REV	DESCRIPTION	DATE	BY	CHECKED	APP
	SEE SHEET 1				

SHEET LEFT BLANK
FOR FUTURE DATA

LT-EL-SR-EI-PPS-0218-90

LT-EL-SR-EI DRAWING DIRECTORY	LT-EL-SR-EI-PPS-0218-90 DRAWING NUMBER	C REV
COMPUTER REPRODUCABLE	SCALE: N/A	SHEET 28 OF 49

REV	DESCRIPTION	DATE	BY	CHECKED	APP
	SEE SHEET 1				

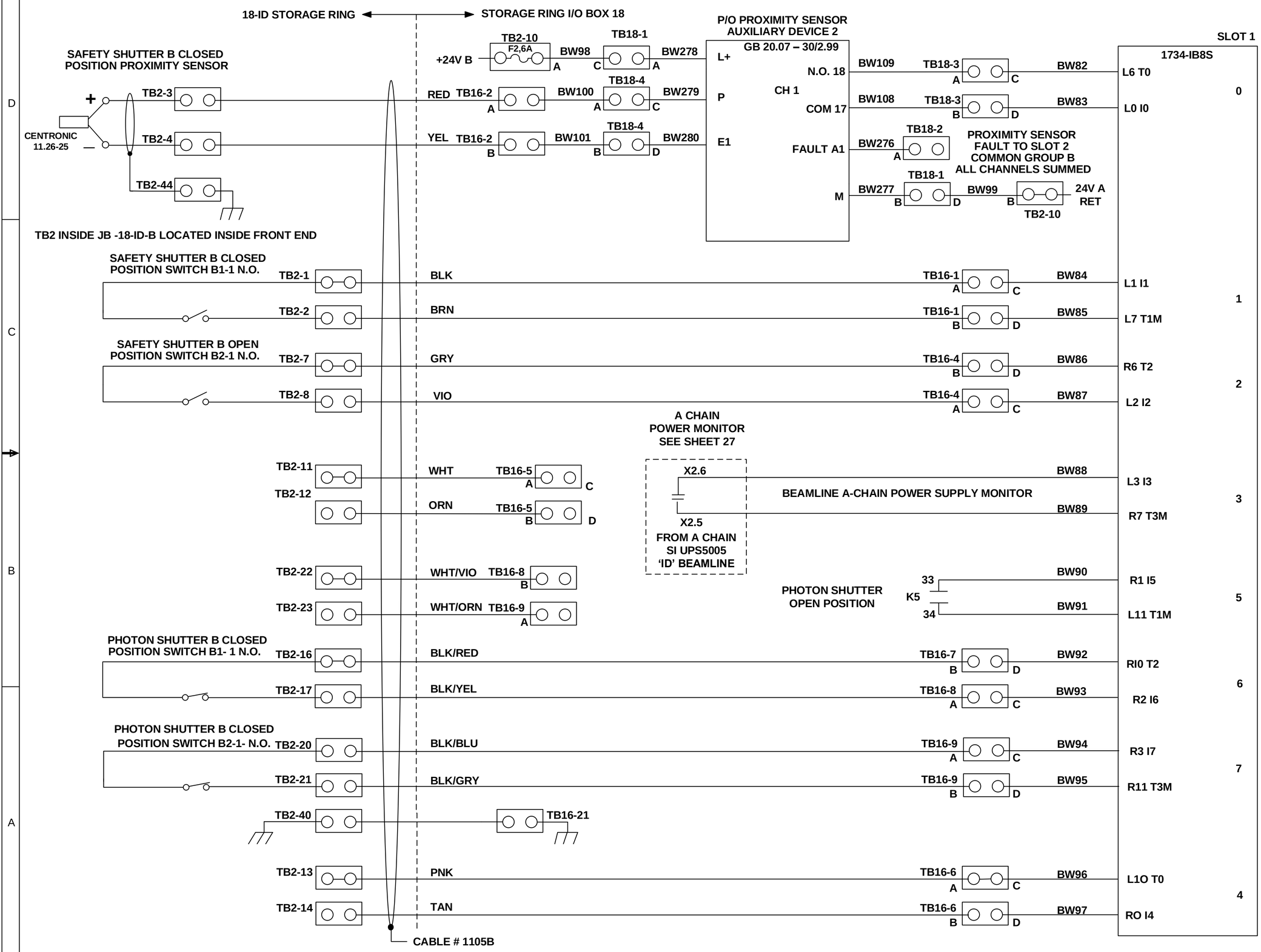

18-ID
ID BEAMLINE GROUP
B

LT-EL-SR-EI DRAWING DIRECTORY	LT-EL-SR-EI-PPS-0218-90 DRAWING NUMBER	C REV
COMPUTER REPRODUCABLE	SCALE: N/A	SHEET 29 OF 49

LT-EL-SR-EI-PPS-0218-90

REV	DESCRIPTION	DATE	BY	CHECKED	APP
	SEE SHEET 1				

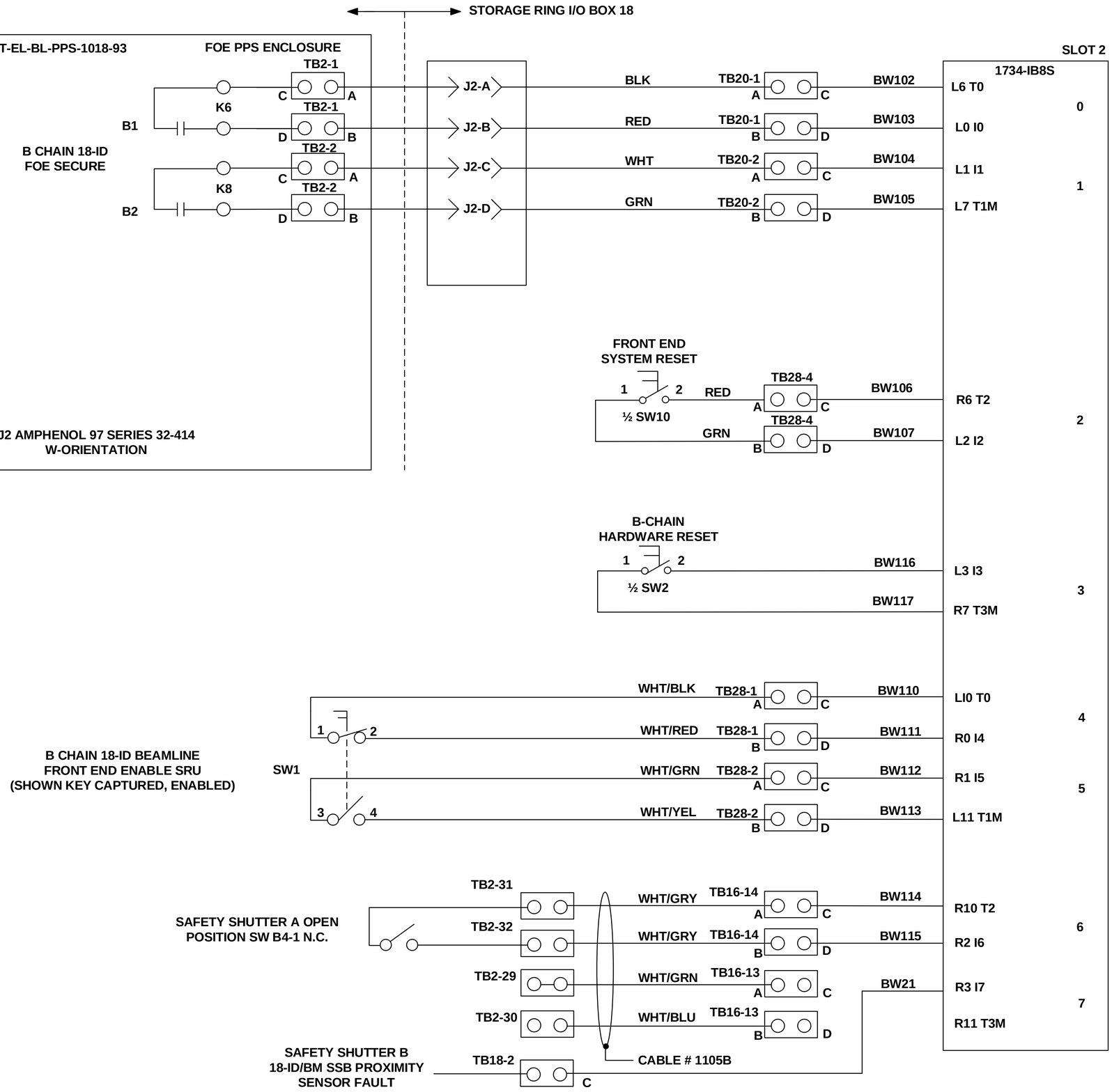

18-ID
ID BEAMLINE GROUP
B

LT-EL-SR-EI (DRAWING DIRECTORY)	LT-EL-SR-EI-PPS-0218-90 (DRAWING NUMBER)	C (REV)
COMPUTER REPRODUCABLE	SCALE: N/A	SHEET 30 OF 49

LT-EL-SR-EI-PPS-0218-90

REV	DESCRIPTION	DATE	BY	CHECKED	APP
	SEE SHEET 1				

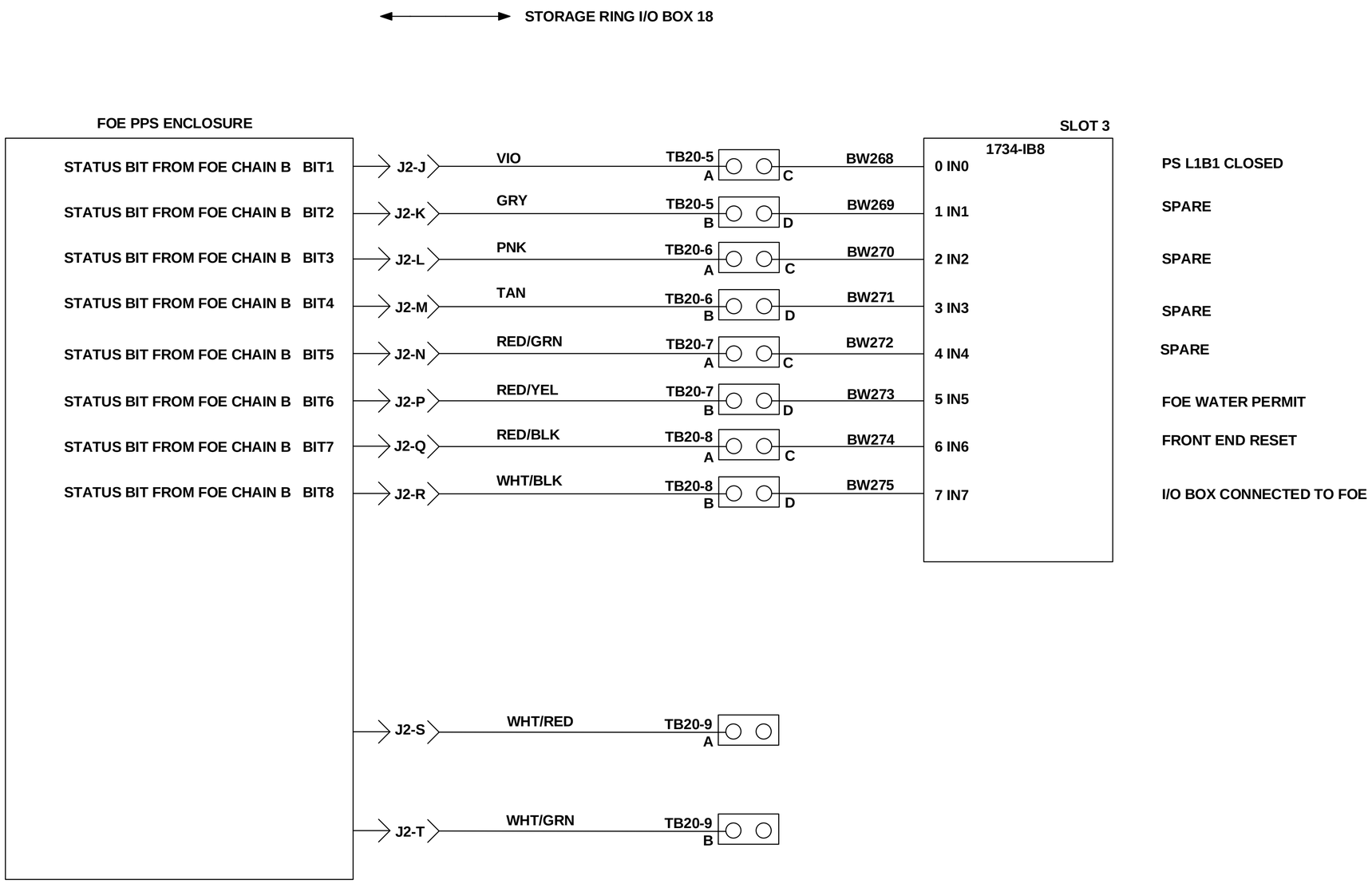

18-ID
ID BEAMLINE GROUP
B

LT-EL-SR-EI (DRAWING DIRECTORY)	LT-EL-SR-EI-PPS-0218-90 (DRAWING NUMBER)	C (REV)
COMPUTER REPRODUCABLE	SCALE: N/A	SHEET 31 OF 49

LT-EL-SR-EI-PPS-0218-90

REV	DESCRIPTION	DATE	BY	CHECKED	APP
	SEE SHEET 1				

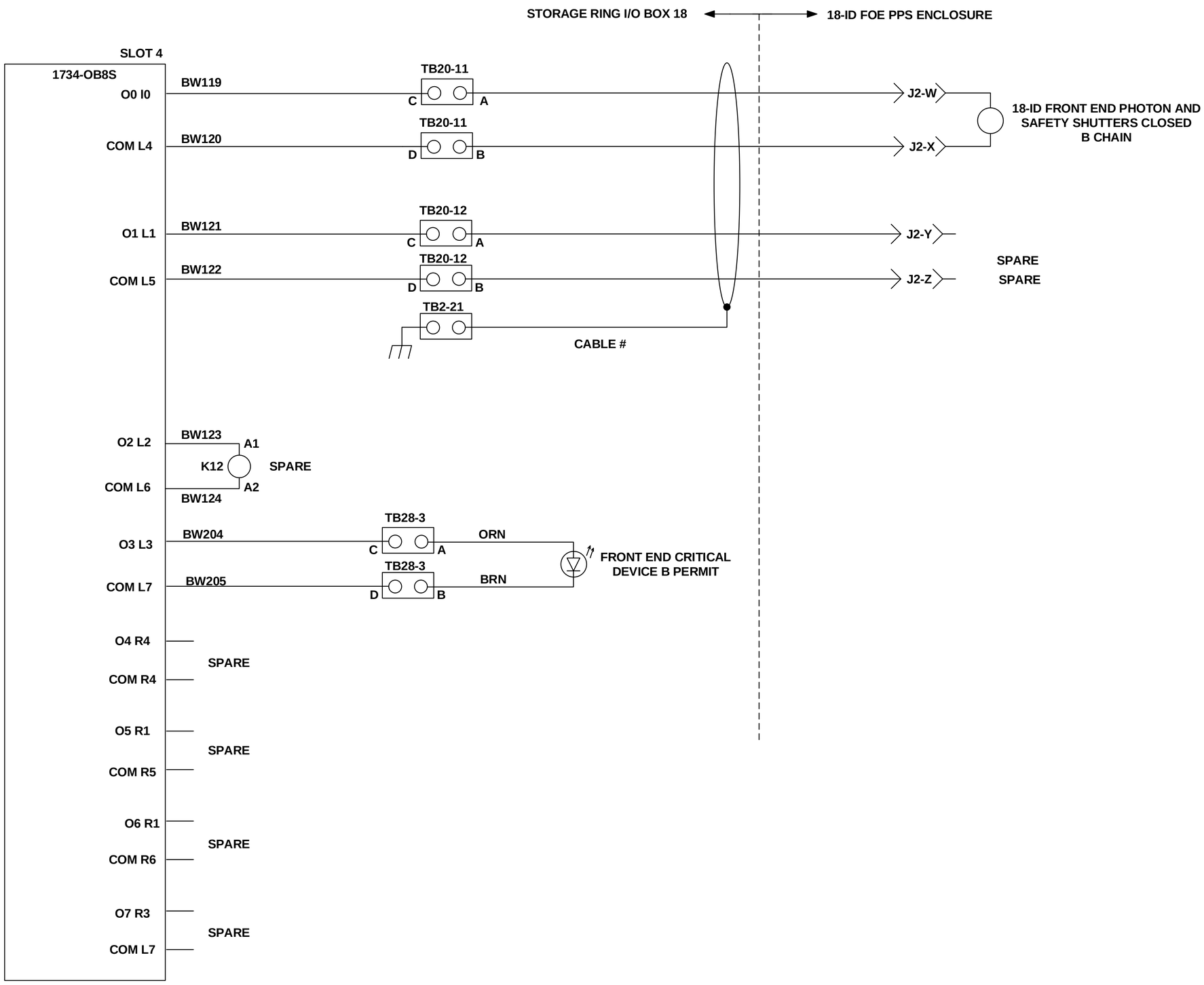

18-ID
ID BEAMLINE GROUP
B

LT-EL-SR-EI (DRAWING DIRECTORY)	LT-EL-SR-EI-PPS-0218-90 (DRAWING NUMBER)	C (REV)
COMPUTER REPRODUCABLE	SCALE: N/A	SHEET 32 OF 49

LT-EL-SR-EI-PPS-0218-90

REV	DESCRIPTION	DATE	BY	CHECKED	APP
	SEE SHEET 1				

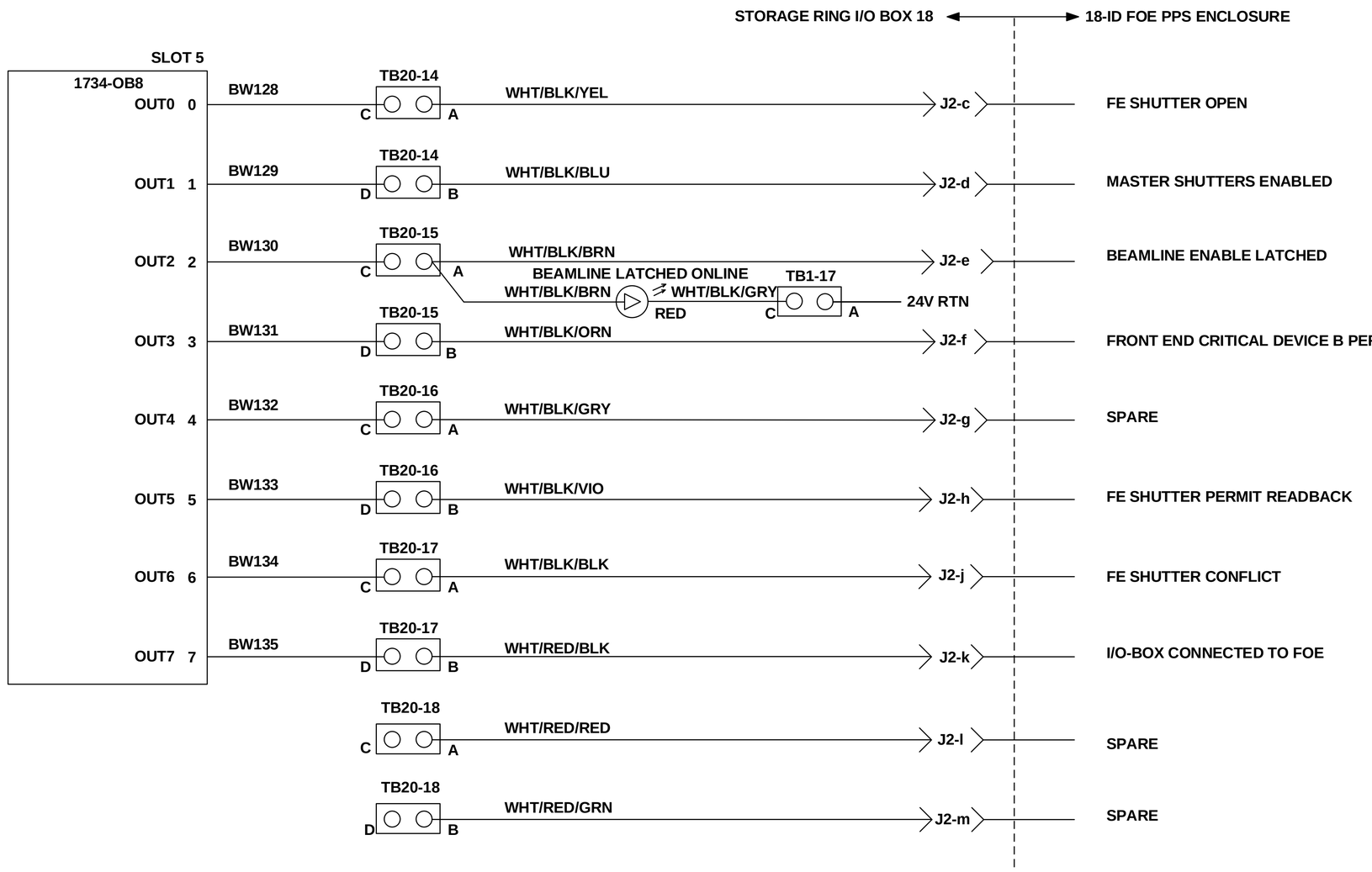

18-ID
ID BEAMLINE GROUP
B

LT-EL-SR-EI (DRAWING DIRECTORY)	LT-EL-SR-EI-PPS-0218-90 (DRAWING NUMBER)	C (REV)
COMPUTER REPRODUCABLE	SCALE: N/A	SHEET 33 OF 49

LT-EL-SR-EI-PPS-0218-90

REV	DESCRIPTION	DATE	BY	CHECKED	APP
	SEE SHEET 1				

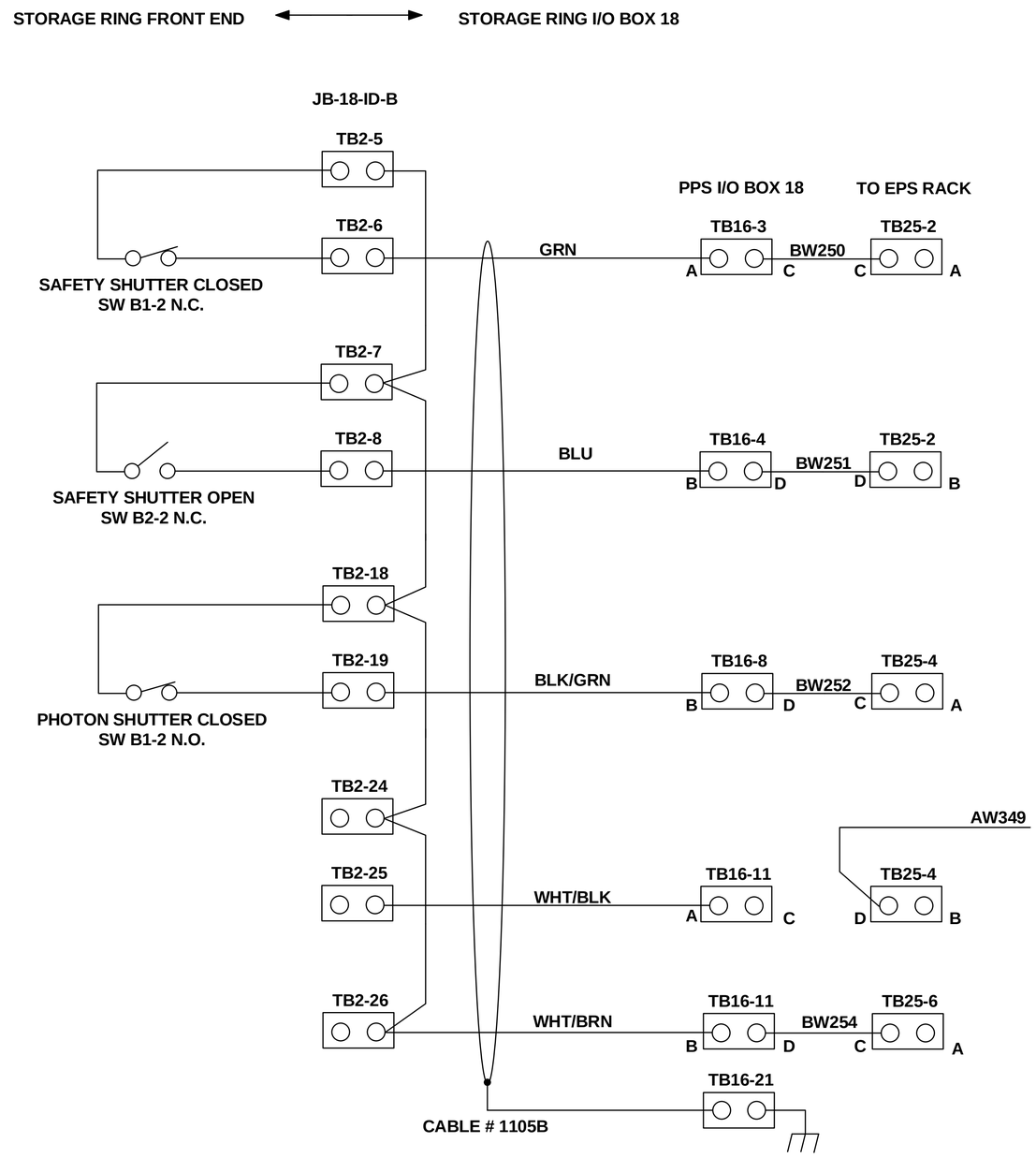

18-ID
ID BEAMLINE GROUP
B

LT-EL-SR-EI (DRAWING DIRECTORY)	LT-EL-SR-EI-PPS-0218-90 (DRAWING NUMBER)	C (REV)
COMPUTER REPRODUCABLE	SCALE: N/A	SHEET 34 OF 49

LT-EL-SR-EI-PPS-0218-90

REV	DESCRIPTION	DATE	BY	CHECKED	APP
	SEE SHEET 1				

SHEET LEFT BLANK
FOR FUTURE DATA

LT-EL-SR-EI-PPS-0218-90

LT-EL-SR-EI DRAWING DIRECTORY	LT-EL-SR-EI-PPS-0218-90 DRAWING NUMBER	C REV
COMPUTER REPRODUCABLE	SCALE: N/A	SHEET 35 OF 49

REV	DESCRIPTION	DATE	BY	CHECKED	APP
	SEE SHEET 1				

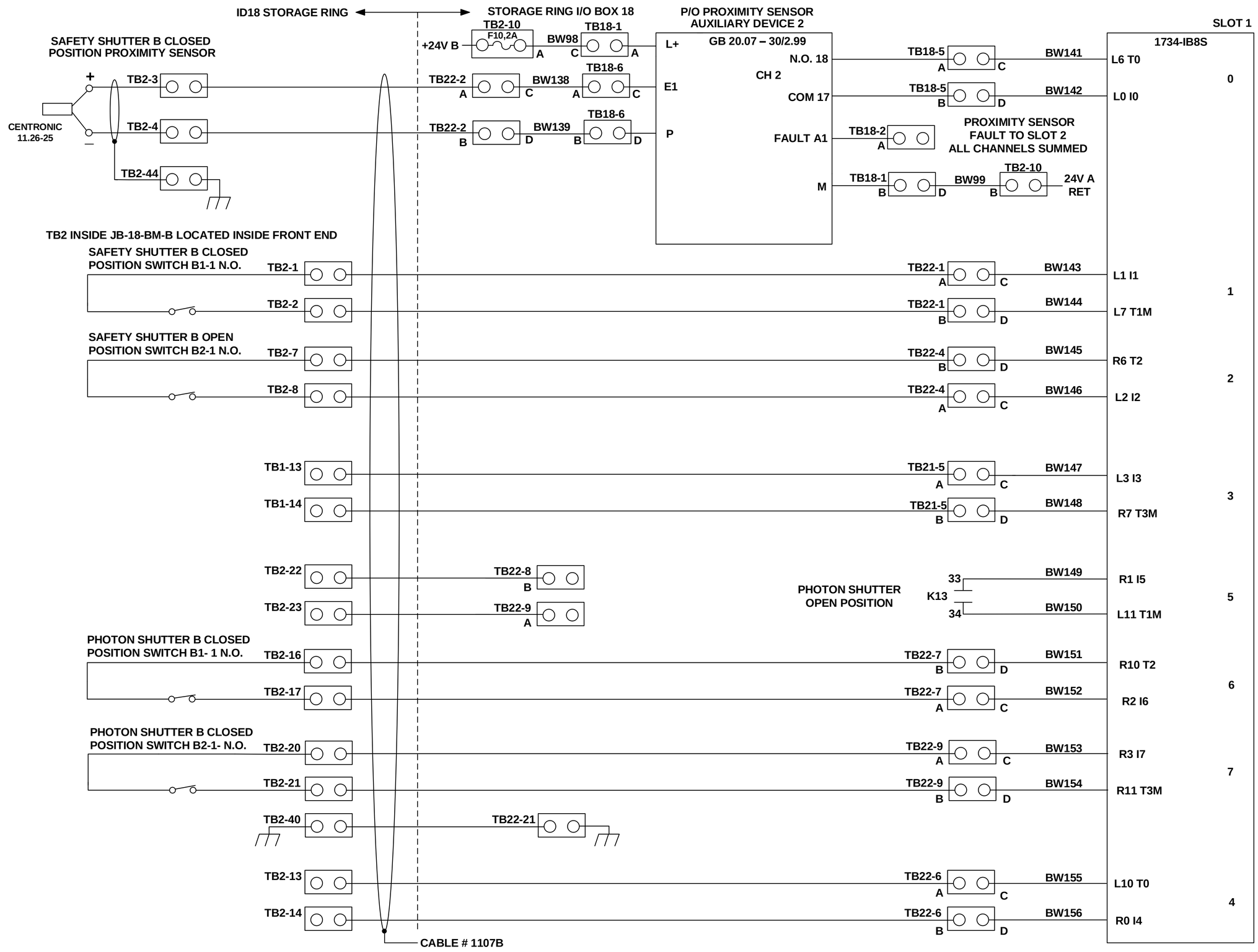

18-BM
BM BEAMLINE GROUP
B

LT-EL-SR-EI (DRAWING DIRECTORY)	LT-EL-SR-EI-PPS-0218-90 (DRAWING NUMBER)	C (REV)
COMPUTER REPRODUCABLE	SCALE: N/A	SHEET 36 OF 49

LT-EL-SR-EI-PPS-0218-90

REV	DESCRIPTION	DATE	BY	CHECKED	APP
	SEE SHEET 1				

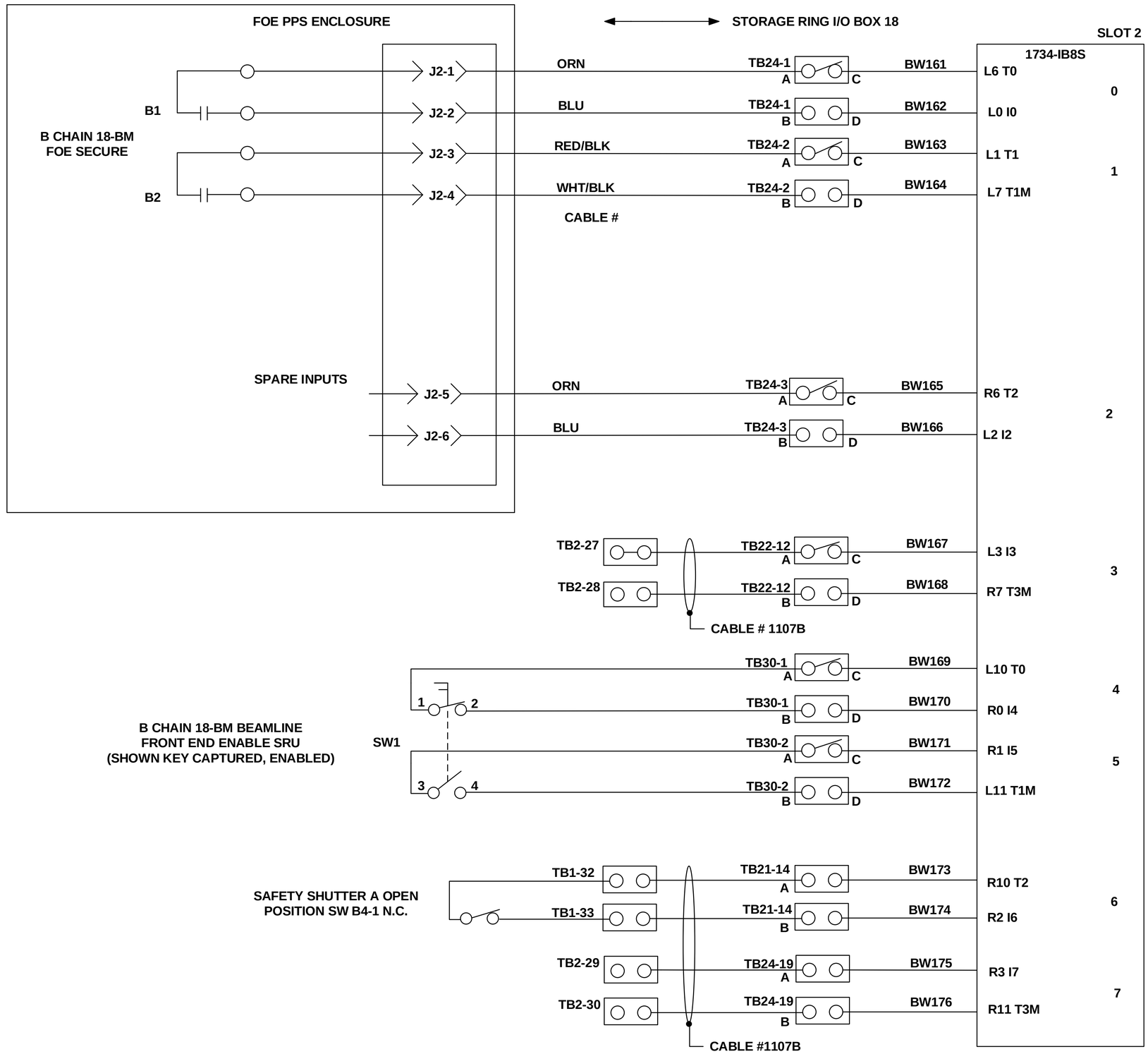

18-BM
BM BEAMLINE GROUP
B

LT-EL-SR-EI-PPS-0218-90

LT-EL-SR-EI (DRAWING DIRECTORY)	LT-EL-SR-EI-PPS-0218-90 (DRAWING NUMBER)	C (REV)
COMPUTER REPRODUCABLE	SCALE: N/A	SHEET 37 OF 49

REV	DESCRIPTION	DATE	BY	CHECKED	APP
	SEE SHEET 1				

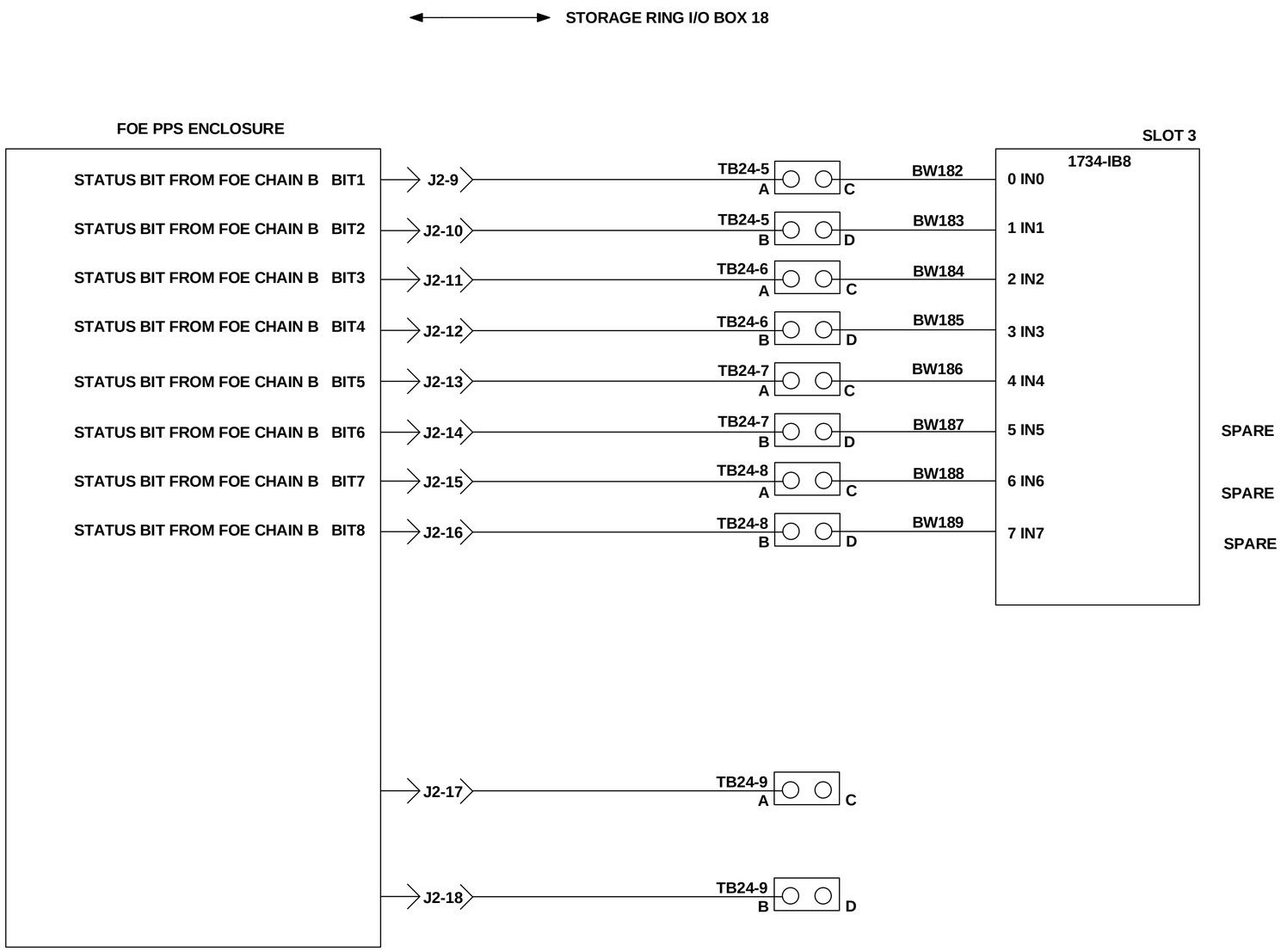

18-BM
BM BEAMLINE GROUP

B

LT-EL-SR-EI (DRAWING DIRECTORY)	LT-EL-SR-EI-PPS-0218-90 (DRAWING NUMBER)	C (REV)
COMPUTER REPRODUCABLE	SCALE: N/A	SHEET 38 OF 49

LT-EL-SR-EI-PPS-0218-90

REV	DESCRIPTION	DATE	BY	CHECKED	APP
	SEE SHEET 1				

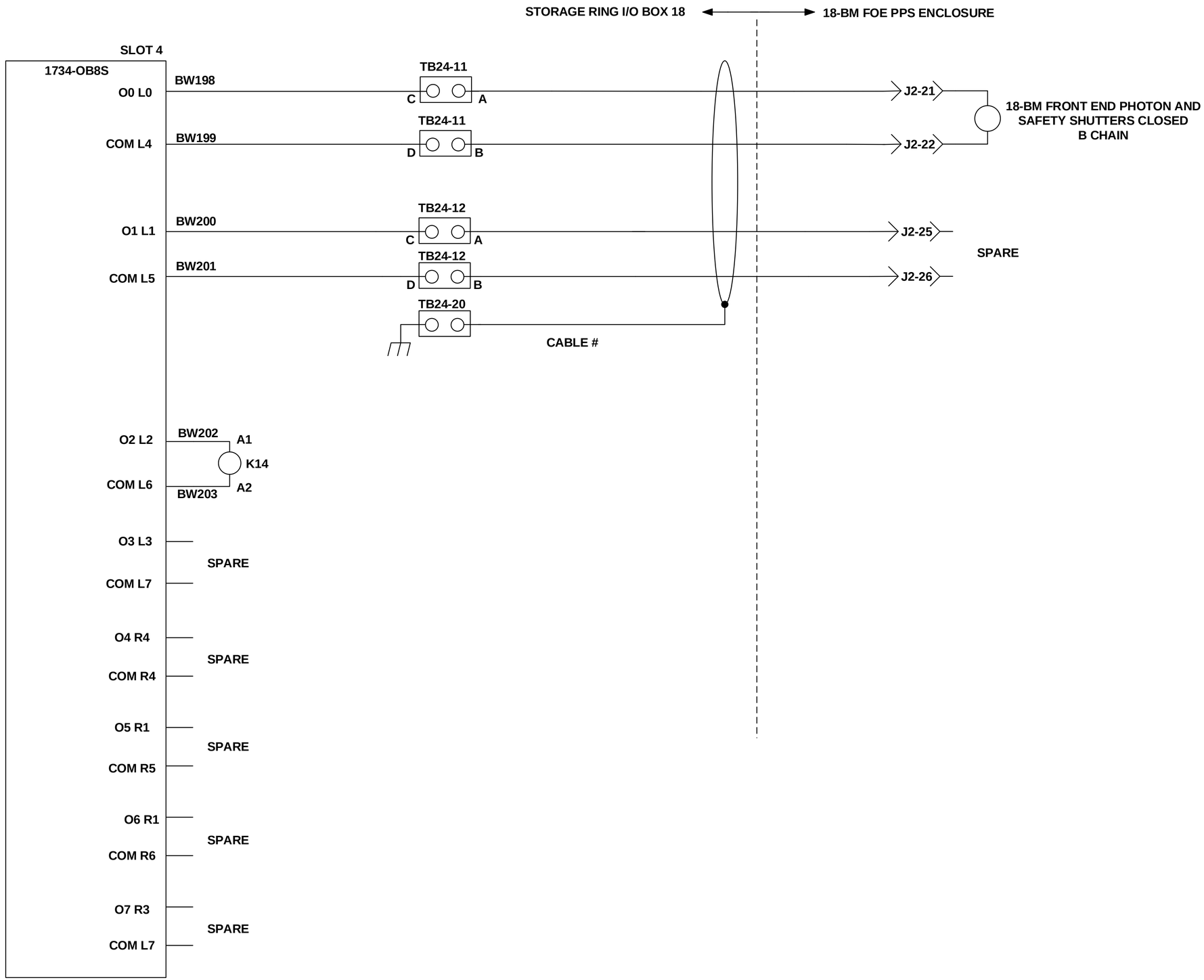

18-BM
BM BEAMLINE GROUP
B

LT-EL-SR-EI (DRAWING DIRECTORY)	LT-EL-SR-EI-PPS-0218-90 (DRAWING NUMBER)	C (REV)
COMPUTER REPRODUCABLE	SCALE: N/A	SHEET 39 OF 49

LT-EL-SR-EI-PPS-0218-90

REV	DESCRIPTION	DATE	BY	CHECKED	APP
	SEE SHEET 1				

STORAGE RING I/O BOX 18 ⟷ 18-BM FOE PPS ENCLOSURE

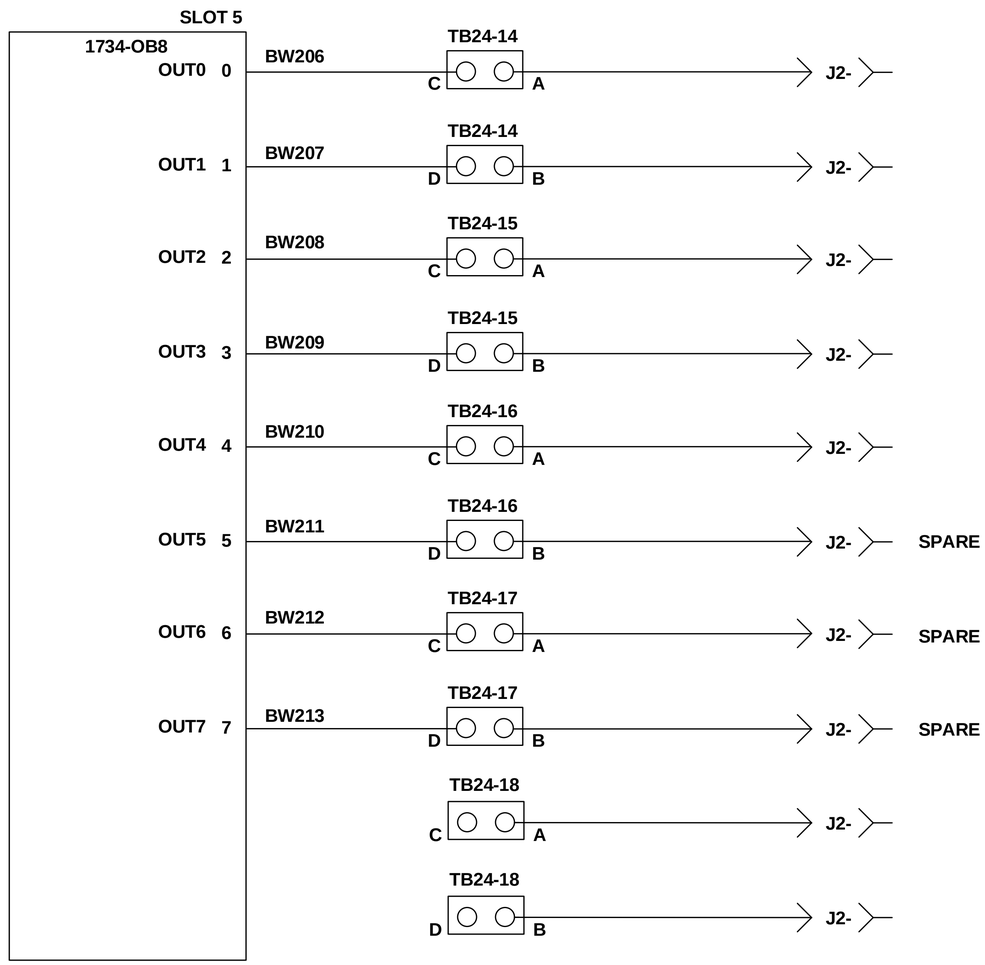

18-BM
BM BEAMLINE GROUP
B

LT-EL-SR-EI (DRAWING DIRECTORY)	LT-EL-SR-EI-PPS-0218-90 (DRAWING NUMBER)	C (REV)
COMPUTER REPRODUCABLE	SCALE: N/A	SHEET 40 OF 49

LT-EL-SR-EI-PPS-0218-90

REV	DESCRIPTION	DATE	BY	CHECKED	APP
	SEE SHEET 1				

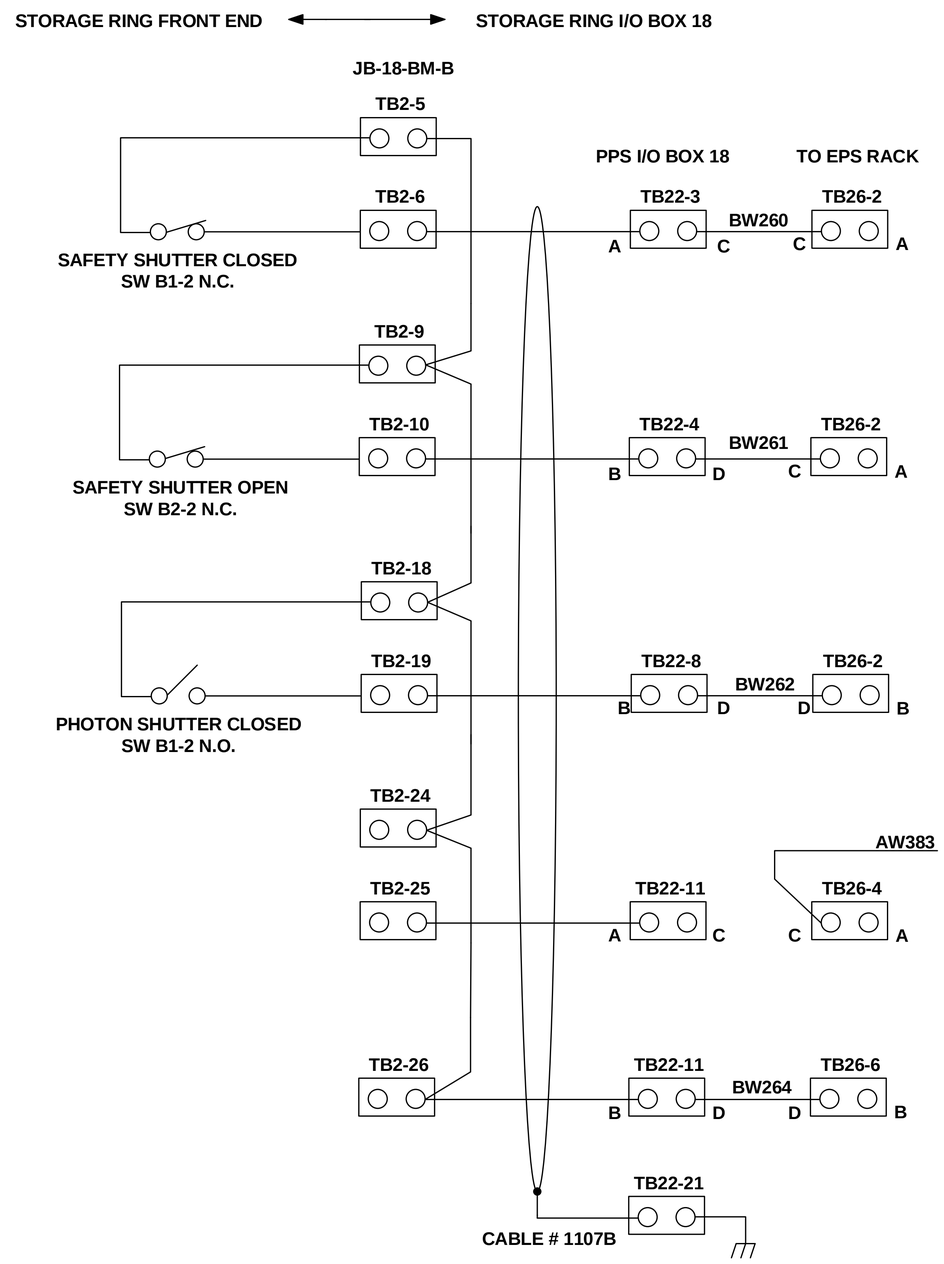

18-BM
BM BEAMLINE GROUP
B

LT-EL-SR-EI (DRAWING DIRECTORY)	LT-EL-SR-EI-PPS-0218-90 (DRAWING NUMBER)	C (REV)
COMPUTER REPRODUCABLE	SCALE: N/A	SHEET 41 OF 49

LT-EL-SR-EI-PPS-0218-90

REV	DESCRIPTION	DATE	BY	CHECKED	APP
	SEE SHEET 1				

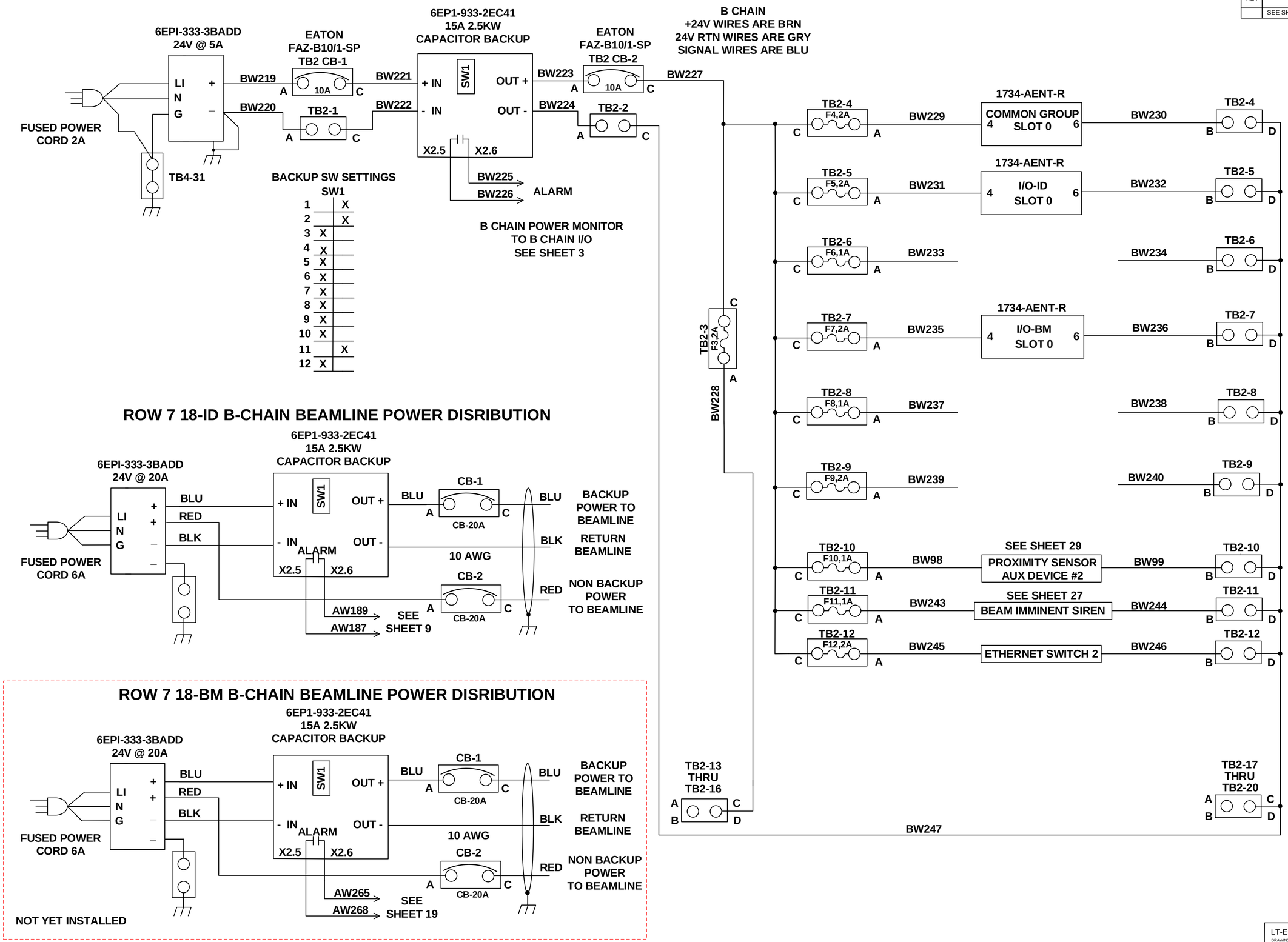

POWER DISTRIBUTION

B

LT-EL-SR-EI (DRAWING DIRECTORY)	LT-EL-SR-EI-PPS-0218-90 (DRAWING NUMBER)	C (REV)
COMPUTER REPRODUCABLE	SCALE: N/A	SHEET 42 OF 49

LT-EL-SR-EI-PPS-0218-90

REV	DESCRIPTION	DATE	BY	CHECKED	APP
	SEE SHEET 1				

PPS I/O BOX TERMINAL LAYOUT TYPE 2

TYPE 1 I/O BOX				
ROW 1				
POWER SUPPLIES				
A CHAIN POWER SUPPLY		6EP1 333-3BA00		SIEMENS
A CHAIN CAPACITOR BACKUP		6EP1 333-2EC41		SIEMENS
A CHAIN SWITCH 2		6GK5208-08AI0-2AA3		SIEMENS
B CHAIN SWITCH 2		1783-US03T0IF		ALLEN BRADLY
B CHAIN POWER SUPPLY		6EP1 333-3BA00		SIEMENS
B CHAIN CAPACITOR BACKUP		6EP1 333-2EC41		SIEMENS
ROW 2				
A CHAIN I/O				
I/O COMMON GROUP A				
SLOT	MODULE	SOCKET	SOCKET	
0	6ES7151-3BA23-0AB0	NA	PN INTERFACE MODULE IM151-3 PN	SIEMENS
1	6ES7138-4CA50-0AB0	6ES7193-4CC20-0AA0	POWER MODULE PM-E	
2	6ES7138-4FA04-0AB0	6ES7193-4CF40-0AA0	4/8FDI 8 SAFE IN	SIEMENS
3	6ES7138-4FA04-0AB0	6ES7193-4CF40-0AA0	4/8FDI 8 SAFE IN	SIEMENS
4	6ES7131-4BF00-0AA0	6ES7193-4CA40-0AA0	8DI 8 STANDARD IN	SIEMENS
5	6ES7132-4BF00-0AA0	6ES7193-4CA40-0AA0	8D0 STANDARD.OUT	SIEMENS
6	6ES7138-4FB03-0AB0	6ES7193-4CF40-0AA0	4FD0 4 SAFE OUT	SIEMENS

REV	DESCRIPTION	DATE	BY	CHECKED	APP
	SEE SHEET 1				

PPS I/O BOX TERMINAL LAYOUT TYPE 2

I/O ID BEAMLINE GROUP A				
SLOT	MODULE	SOCKET		
0	6ES7151-3BA23-0AB0	NA	PN INTERFACE MODULE IM151-3 PN	SIEMENS
1	6ES7138-4CA50-0AB0	6ES7193-4CC20-0AA0	POWER MODULE PM-E	SIEMENS
2	6ES7138-4FA04-0AB0	6ES7193-4CF40-0AA0	4/8FDI 8 SAFE IN	SIEMENS
3	6ES7138-4FA04-0AB0	6ES7193-4CF40-0AA0	4/8FDI 8 SAFE IN	SIEMENS
4	6ES7131-4BF00-0AA0	6ES7193-4CA40-0AA0	8DI 8 STANDARD IN	SIEMENS
5	6ES7138-4FB03-0AB0	6ES7193-4CF40-0AA0	4FD0 4 SAFE OUT	SIEMENS
6	6ES7132-4BF00-0AA0	6ES7193-4CA40-0AA0	8D0 STANDARD.OUT	SIEMENS
I/O BM BEAMLINE GROUP A				
SLOT	MODULE	SOCKET		
0	6ES7151-3BA23-0AB0	NA	PN INTERFACE MODULE IM151-3 PN	SIEMENS
1	6ES7138-4CA50-0AB0	6ES7193-4CC20-0AA0	POWER MODULE PM-E	SIEMENS
2	6ES7138-4FA04-0AB0	6ES7193-4CF40-0AA0	4/8FDI 8 SAFE IN	SIEMENS
3	6ES7138-4FA04-0AA0	6ES7193-4CF40-0AA0	4/8FDI 8 SAFE IN	SIEMENS
4	6ES7131-4BF00-0AA0	6ES7193-4CA40-0AA0	8DI 8 STANDARD IN	SIEMENS
5	6ES7138-4FB03-0AB0	6ES7193-4CF40-0AA0	4FD0 4 SAFE OUT	SIEMENS
6	6ES7132-4BF00-0AA0	6ES7193-4CA40-0AA0	8D0 STANDARD.OUT	SIEMENS
TB27	4-2 COVER LARGE 3	1>6 1		
TB29	4-2 COVER LARGE 3	1>6 1	END CLAMP 5	

1	3044636
2	3044092
3	3047293
4	3047303
5	1201413
6	EPDDFL4U
7	3044542
8	DDFL-4U
9	3044076
10	3047028
11	3047170

LT-EL-SR-EI-PPS-0218-90

LT-EL-SR-EI (DRAWING DIRECTORY)	LT-EL-SR-EI-PPS-0218-90 (DRAWING NUMBER)	C (REV)
COMPUTER REPRODUCABLE	SCALE: N/A	SHEET 44 OF 49

REV	DESCRIPTION	DATE	BY	CHECKED	APP
	SEE SHEET 1				

PPS I/O BOX TERMINAL LAYOUT TYPE 2

ROW 3						
TB15	END CLAMP 5	4-2 COVER LARGE 3	1>20 1	4-2 COVER SMALL 4	21 2	
TB19	4-2 COVER LARGE 3	1>20 1	4-2 COVER SMALL 4	21 2		
TB21	4-2 COVER LARGE 3	1>20 1	4-2 COVER SMALL 4	21 2		
TB23	4-2 COVER LARGE 3	1>20 1	21 2			
TB25	4-2 COVER LARGE 3	1>5 1 / 6 7 / 7>15 1	16 2			
TB1	FUSE PLATE 6	1>12 8	13>21 7	END CLAMP 5		
			USE JUMPER STRIPS 1>12 AND 13>21			
SPACE FOR AUXILLRY DEVICE 1, A CHAIN 1.125"						
TB17	END CLAMP 5	4-2 COVER LARGE 3	1>6 1	4-2 COVER SMALL 4	END CLAMP 5	
ROW 4						
TB3	END CLAMP 5	4-2 COVER LARGE 3	1>7 1	4-2 COVER SMALL 4	8 2	
TB5	4-2 COVER LARGE 3	1>2 1	4-2 COVER SMALL 4	FUSE PLATE 6	3 8	4 9
TB7	4-2 COVER LARGE 3	1>2 1	4-2 COVER SMALL 4	FUSE PLATE 6	3 8	4 9
TB9	4-2 COVER LARGE 3	1>3 1	4-2 COVER SMALL 4	4 2		
TB11	4-2 COVER LARGE 3	1>3 1	4-2 COVER SMALL 4	4 2		
RELAY	MODULE	SOCKET				
K1	ALTECH 5669	SOCKET SCHRACK RT 78626		A CHAIN HII BEAM IMMINENT SIREN PERMIT		
K2	ELESTA SRG282Z	SOCKET SCHRACK RT 78626		A CHAIN HII BEAM IMMINENT SIREN PERMIT		
K3	ALTECH 5669	SOCKET SCHRACK RT 78626		A CHAIN HII BEAM IMMINENT BEACON PERMIT		

1	3044636
2	3044092
3	3047293
4	3047303
5	1201413
6	EPDDFL4U
7	3044542
8	DDFL-4U
9	3044076
10	3047028
11	3047170

LT-EL-SR-EI-PPS-0218-90

LT-EL-SR-EI (DRAWING DIRECTORY)	LT-EL-SR-EI-PPS-0218-90 (DRAWING NUMBER)	C (REV)
COMPUTER REPRODUCABLE	SCALE: N/A	SHEET 45 OF 49

REV	DESCRIPTION	DATE	BY	CHECKED	APP
	SEE SHEET 1				

PPS I/O BOX TERMINAL LAYOUT TYPE 2

RELAY	MODULE	SOCKET			
K7	ALTECH 5669	SOCKET SCHRACK RT 78626		A CHAIN ACCESS PERMIT RELAY	
K9	ALTECH 5669	SOCKET SCHRACK RT 78626		A CHAIN LOCK PERMIT	
K11	ALTECH 5669	SOCKET SCHRACK RT 78626		A CHAIN ID MASTER SHUTTER RELAY	
K13	ELESTA SIM3	SOCKET ELESTA SRD-SIM4		BM PHOTON SHUTTER OPEN FAN OUT RELAY	
K15	ALTECH 5669	SOCKET SCHRACK RT 78626		ID REQUEST TO CLOSE SHUTTERS	
K17	ALTECH 5669	SOCKET SCHRACK RT 78626		BM REQUEST TO CLOSE SHUTTERS	
K4	ELESTA SRG282Z	SOCKET SCHRACK RT 78626		B CHAIN HII BEAM IMMINENT BEACON PERMIT	
K5	ELESTA SIM3	SOCKET ELESTA SRD-SIM4		ID PHOTON SHUTTER OPEN FAN OUT RELAY	
K6	ELESTA SRG282Z	SOCKET SCHRACK RT 78626		B CHAIN AREA SAFE SIGN PERMIT	
TB4	END CLAMP 5	4-2 COVER LARGE 3	1>10 1	4-2 COVER SMALL 4	11 2
TB6	4-2 COVER LARGE 3	1>3 1	4-2 COVER SMALL 4	4 2	
TB8	4-2 COVER LARGE 3	1>3 1	4-2 COVER SMALL 4	4 2	

1	3044636
2	3044092
3	3047293
4	3047303
5	1201413
6	EPDDFL4U
7	3044542
8	DDFL-4U
9	3044076
10	3047028
11	3047170

LT-EL-SR-EI-PPS-0218-90

LT-EL-SR-EI (DRAWING DIRECTORY)	LT-EL-SR-EI-PPS-0218-90 (DRAWING NUMBER)	C (REV)
COMPUTER REPRODUCABLE	SCALE: N/A	SHEET 46 OF 49

REV	DESCRIPTION	DATE	BY	CHECKED	APP
	SEE SHEET 1				

PPS I/O BOX TERMINAL LAYOUT TYPE 2

ROW 5					
B CHAIN I/O					
I/O COMMON GROUP B					
SLOT	MODULE	SOCKET (QTY)			
0	1734-AENTR		24V DC ETHERNET ADAPTER		AB
1	1734-IB8S	1734-TOP3 (2)	AB INPUT F 8 SAFETY IN		AB
2	1734-IB8	1734-TB	AB INPUT STANDARD 8 STANDARD IN		AB
3	1734-OBE	1734-TB	8 CHANNEL STANDARD OUT		AB
4	1734-OW4	1734-TB	RELAY MODULE 4 OUTPUT		AB
5	1734-OIB8	1734-TOP3 (2)	AB INPUT F 8 SAFETY OUT		AB
I/O ID BEAMLINE GROUP B					
SLOT	MODULE	SOCKET			
0	1734-AENTR		24V DC ETHERNET ADAPTER		AB
1	1734-IB8S	1734-TOP3 (2)	AB INPUT F 8 SAFETY IN		AB
2	1734-IB8S	1734-TOP3 (2)	AB INPUT F 8 SAFETY IN		AB
3	1734-IB8	1734-TB	AB INPUT STANDARD 8 STANDARD IN		AB
4	1734-OB8S	1734-TOP3 (2)	8 SAFETY OUT		AB
5	1734-OB8	1734-TB	8 CHANNEL STANDARD OUT		AB
I/O BM BEAMLINE GROUP B					
SLOT	MODULE	SOCKET			
0	1734-AENTR		24V DC ETHERNET ADAPTER		AB
1	1734-IB8S	1734-TOP3 (2)	AB INPUT F 8 SAFETY IN		AB
2	1734-IB8S	1734-TOP3 (2)	AB INPUT F 8 SAFETY IN		AB
3	1734-IB8S	1734-TB	AB INPUT STANDARD 8 STANDARD IN		AB
4	1734-IB8	1734-TOP3 (2)	8 SAFETY OUT		AB
5	1734-OB8S	1734-TB	8 CHANNEL STANDARD OUT		AB
TB28	4-2 COVER LARGE 3	1>2 1	4-2 COVER SMALL 4		
TB30	4-2 COVER LARGE 3	1>2 1	4-2 COVER SMALL 4	END CLAMP 5	

1	3044636
2	3044092
3	3047293
4	3047303
5	1201413
6	EPDDFL4U
7	3044542
8	DDFL-4U
9	3044076
10	3047028
11	3047170

LT-EL-SR-EI-PPS-0218-90

LT-EL-SR-EI (DRAWING DIRECTORY)	LT-EL-SR-EI-PPS-0218-90 (DRAWING NUMBER)	C (REV)
COMPUTER REPRODUCABLE	SCALE: N/A	SHEET 47 OF 49

REV	DESCRIPTION	DATE	BY	CHECKED	APP
	SEE SHEET 1				

PPS I/O BOX TERMINAL LAYOUT TYPE 2

ROW 6					
TB16	END CLAMP 5	4-2 COVER LARGE 3	1>20 1	4-2 COVER SMALL 4	21 2
TB20	4-2 COVER LARGE 3	1>20 1	4-2 COVER SMALL 4	21 2	
TB22	4-2 COVER LARGE 3	1>20 1	4-2 COVER SMALL 4	21 2	
TB24	4-2 COVER LARGE 3	1>20 1	4-2 COVER SMALL 4	21 2	
TB26	4-2 COVER LARGE 3	1>5 1 / 6 7 / 7>15 1	4-2 COVER SMALL 4	21 2	
TB7	FUSE PLATE 6	1>12 8	13>21 END CLAMP 7	END CLAMP 5	
			USE BUSS JUMPER STRIPS 1>12 & 13>21		
SPACE FOR AUXILLARY DEVICE 1,A CHAIN		1.125"			
TB18	END CLAMP 5	4-2 COVER LARGE 3	1>6 1	4-2 COVER SMALL 4	END CLAMP 5

1	3044636
2	3044092
3	3047293
4	3047303
5	1201413
6	EPDDFL4U
7	3044542
8	DDFL-4U
9	3044076
10	3047028
11	3047170

LT-EL-SR-EI-PPS-0218-90

LT-EL-SR-EI (DRAWING DIRECTORY)	LT-EL-SR-EI-PPS-0218-90 (DRAWING NUMBER)	C (REV)
COMPUTER REPRODUCABLE	SCALE: N/A	SHEET 48 OF 49

REV	DESCRIPTION	DATE	BY	CHECKED	APP
	SEE SHEET 1				

PPS I/O BOX TERMINAL LAYOUT TYPE 1

ROW 7					
POWER SUPPLIES					
A CHAIN ID BEAMLINE POWER SUPPLY		6EP1 333-3BADD			SIEMENS
A CHAIN ID CAPACITOR BACKUP		6EP1 333-2EC41			SIEMENS
BL P.S. CIRCUIT BREAKER		20A			EATON
BL CAP BACKUP CIRCUIT BREAKER		20A			EATON
A CHAIN BM BEAMLINE POWER SUPPLY		6EP1 333-3BADD			SIEMENS
A CHAIN BM CAPACITOR BACKUP		6EP1 333-2EC41			SIEMENS
BL P.S. CIRCUIT BREAKER		20A			EATON
BL CAP BACKUP CIRCUIT BREAKER		20A			EATON
B CHAIN ID BEAMLINEPOWER SUPPLY		6EP1 333-3BADD			SIEMENS
B CHAIN ID CAPACITOR BACKUP		6EP1 333-2EC41			SIEMENS
BL P.S. CIRCUIT BREAKER		20A			EATON
BL CAP BACKUP CIRCUIT BREAKER		20A			EATON
B CHAIN BM BEAMLINE POWER SUPPLY		6EP1 333-3BADD			SIEMENS
B CHAIN BM CAPACITOR BACKUP		6EP1 333-2EC41			SIEMENS
BL P.S. CIRCUIT BREAKER		20A			EATON
BL CAP BACKUP CIRCUIT BREAKER		20A			EATON

NOT INSTALLED YET

NOT INSTALLED YET

NOT INSTALLED YET

NOT INSTALLED YET

LT-EL-SR-EI-PPS-0218-90

LT-EL-SR-EI (DRAWING DIRECTORY)	LT-EL-SR-EI-PPS-0218-90 (DRAWING NUMBER)	C (REV)
COMPUTER REPRODUCABLE	SCALE: N/A	SHEET 49 OF 49